AGENDA
CHASKA PLANNING COMMISSION
CHASKA CITY HALL - COUNCIL CHAMBERS & ZOOM
Wednesday, June 08, 2022
7:00 PM

1. Call to Order
2. Roll Call
3. Adopt Agenda
4. Visitor Presentation
5. Approve Previous Meeting Minutes
   - 5.A. Approve the May 11, 2022 Planning Commission Meeting Minutes
6. Consent Items
   - 6.A. Recommend Approval of the Final Site & Building Plan and Final Plat for Cantissimo of Chaska/Anasazi Holdings/PC #2022-34
   - 6.B. Recommend Approval of the Final Plat for Ensconced Woods/Johnson-Reiland Builders & Remodelers/PC #2022-37
   - 6.C. Recommend Approval of the Final Plat for Oak Creek/DR Horton/PC #2022-39
   - 6.D. Recommend Approval of the Final Plat for Rivertown Heights/DR Horton/PC #2022-38
   - 6.E. Recommend Approval of the Final Site & Building Plan and Final Plat for Oak Ridge/RCS-RCA Oak Ridge LLC/PC #2022-36
7. Action Items
   - 7.A. CONTINUED FROM MAY 11, 2022 PLANNING COMMISSION MEETING: Recommend Approval of the Concept Plan for Block 42 in Downtown Chaska/Community Asset Development Group/PC #2022-30

7.B. PUBLIC HEARING: Recommend Approval of the Final Site & Building Plan and Variance for Clover Ridge Apartments/AV Development/PC #2022-35

7.C. PUBLIC HEARING: Recommend Approval of the Conditional Use Permit (CUP) for 415 Walnut Street North/Chaska Moravian Church/PC #2022-33

8. Other Business

8.A. Receive Other Meeting Minutes

8.A.i. Receive the April 18, 2022 City Council Meeting Minutes

8.A.ii. Receive the April 4, 2022 EDA Meeting Minutes

8.A.iii. Receive the March 8th 2022 Park Board Meeting Minutes

9. Adjourn

CHASKA PLANNING COMMISSION
MINUTES
MAY 11, 2022

1. Call to Order
Commissioner Lacey called the meeting to order at 7 pm.

2. Roll Call
Roll call was taken. Members present: Commissioners Lacey, Olson, Rylee, Gaare, Urbanski, Aasen, and Baswa.

Members absent: Commissioner Brass and Chairperson Dahlke.

Also present: Nate Kabat, Community Development Director; Jacob Saufley City Attorney; and, Liz Hanson, City Planner.

3. Adopt the Agenda
Commissioner Lacey noted that the agenda would need to be amended in order to appoint him as Acting Chair in the absence of both Chair Dahlke and Vice-Chair Brass.

Community Development Director explained that because Commissioner Lacey is the most senior member of the Commission, staff had made the recommendation for him to serve as the Chair.

Motion by Commissioner Urbanski, second by Commissioner Olson, to adopt the agenda as revised, appointing Commissioner Lacey to serve as Acting Chair.
Motion carried.

4. Visitor Presentation
No one appeared under Visitor Presentation.

5. Approve the Minutes of the April 13, 2022 Planning Commission Meeting
Motion by Commissioner Aasen, second by Commissioner Baswa to approve the minutes of the April 13, 2022 Planning Commission meeting, as presented.
Motion carried.

6. Consent Agenda
Commissioner Rylee noted that he had a question for the developer of the Chaska Creek industrial Phase 3. He noted that he was aware that they did not have tenants yet arranged for the property, but noted the importance of visual screening and also the noise aspect of the operation with respect to the residents. He asked if this was something that they would communicate to the potential tenants in this space because of their proximity to the homes.

Jay Moore, Otten Investment Company, stated that he was here representing the developer and explained that they have attempted to screen the residences as best as they can with landscaping

and berming. He stated that because this product is probably about 2 years away from delivery, it is hard to say who will be there. He explained that he would lean towards staff for recommendations but assured the Commission that they are doing their best to protect the neighborhood and would follow all City codes related to noise.

Commissioner Rylee asked Mr. Otten to make sure that they do their research because noise falls under the MPCA standards and not the City's.

Mr. Moore explained that this is their third building in that business park and noted that they have very strong users lined up that are working on their leases. He noted that he thinks the City will be very pleased with the end result because they are national companies with very strong employment records. He stated that he does not foresee the use as being just 'trucks in' and 'trucks out' or something like welding, but should be more of a heavy finish/office type businesses that will enhance Chaska.

Motion by Commissioner Olson, second by Commissioner Aasen, to approve the Consent Agenda as follows:

a. Recommend Approval of the Final Site and Building Plan and Final Plat for Chaska Creek Industrial Phase 3/Oppidan/PC #2022-29.
b. Recommend Approval of the Final Site and Building Plan, Final Plat and Sale of Excess City land for West Creek Apartments/Community Asset Development Group/PC #2022-32.
c. Recommend Approval of the Final Site and Building Plan for the Fieldhouse Addition at Southwest Christian High School/Southwest Christian/PC #2022-28.

Motion carried.

7. CONTINUED FROM APRIL 13, 2022: Recommend Approval of the Preliminary Site and Building Plan and Preliminary Plat for The Gallery Chaska Apartments/PC #2022-21

Commissioner Olson recused himself from discussion on this item.

City Planner Hanson presented the item to the Commission and noted that it will appear before the Council on May 16, 2022.

Commissioner Urbanski stated that the Commission had received a few notes from Travis Olson related to some history on the property dating back to 2002. He asked for an explanation of the information they were given.

City Planner Hanson stated that her understanding is that this information was pulled from Clover Preserve 2nd Addition's plat. She stated that the wetland area was platted as an outlot for future development but also for wetland area and was retained by the property owner at that time. She noted that there has always been an intent to use this area for an apartment site.

Community Development Director Kabat noted that was something that came up and was discussed during the Concept Plan and reiterated that the intent was always for the wetland portion of it to become dedicated to the City.

An alarm was heard throughout the building and on phones.

Community Development Director Kabat explained that the area was currently under a Tornado Warning and noted that the recommendation was for people to take shelter. He recommended that the Commission enter into a recess in order for the Commission and the public to heed that warning.

Motion by Commissioner Rylee, second by Commission Urbanski, to recess the Planning Commission meeting at 7:34 p.m. in order to seek shelter from the potential storm.
Motion carried.

Acting Chair Lacey reconvened the Planning Commission meeting at 8:09 p.m.

Community Development Director Kabat stated that before the meeting was interrupted by weather, he had been explaining that it is very typical that the City would take an outlot that contains wetlands and the City ends up holding ownership, but noted they do not ever take outlots that have developable property on it.

Acting Chair Lacey asked if there was anyone present who would like to comment on this item.

Beth Sanchez, Sophia Drive, stated that she has a few concerns from the April meeting. She stated that the verbal summary provided by City Planner Hanson reflected that this was in accordance with the 2040 Comprehensive Plan, however the new road to the south of the railroad tracks connecting to Clover Preserve Drive, which impedes on the wetland, was never been included in the 2040 Comprehensive Plan. She explained that this was a new item proposed by D.R. Horton/Chase and stated that public comment for this item at that meeting was closed at 9:18 p.m. She stated that after this, the developer made his presentation to the Commission and exchanged communication with them for 43 minutes. She stated that it was during that time that she would have liked to have the opportunity to speak once again but felt she was unable to do so because public comment had been closed already. She explained that she would also like to address the timelines regarding meetings and notifications. She stated that she was notified of the April 13, 2022 Planning Commission meeting via mail and included the Oak Creek Addition and the Gallery Chaska Apartments development and to date she had not received any notification of tonight's meeting. She stated that the developer heard public comment at the April 13, 2022 Commission meeting and chose not to schedule a community meeting with the residents until less than 1 week prior to this meeting. She stated that notification by the developer was left at mail box sites on May 4, 2022 rather than mailing them to residents, for the May 7, 2022 meeting. She noted that she would not have found out about this meeting if a neighbor had not chosen to share it on social media. She noted that at the meeting the developer provided information and addressed concerns about the size of the building with a rebuttal rather than a solution. She stated that the meeting lacked any real solution related to the size of the building. She explained that due to lack of communication from both the City and developer, she personally distributed 50 flyers with information about the development and tonight's meeting and also knocked on doors and spoke with the residents. She noted that some residents were aware of the plans and told her that they felt their voice would not make any difference in the City's decision. She shared some of the concerns that had been raised by the people she spoke with including that it is not a part of Jonathan. She stated that her personal concerns are related to the size of the apartment building. She stated that she understands that Chaska may need more rental units but does not feel that should override the moral obligation to provide them in a

manner that is best for everyone. She stated that for residents of Chaska, their landscape will never be the same, the lights will never completely turn off at night, the traffic will significantly increase, and those on Sophia Drive will receive the brunt of the noise for the complex. She stated that at the April 13, 2022 Commission meeting one of the Commissioners had commented on the Clover Ridge proposal that a lack of community input is reflective of little or no concern about the project. She noted that this comment contradicts the statement made at the start of the meeting saying that comments should be limited to 5 minutes and for residents to refrain from repeated what had already been stated. She stated that she had attended meetings for the Sagewood 2 and Oakwood Additions and has not spoken because of that opening statement as well as her fears related to public speaking. She stated that the last developments in this area have caused some people to move away prior to the development taking place in order to get more value for their home. She explained that she has spoken with neighbors that have not been present for the meetings who are concerned and upset for reasons unknown to her, have chosen not to provide public comment. She noted that most of the residents who will be living directly across from the apartments are not in place yet because two of the townhomes are still under construction. She asked the Commission to not take silence or absence as a sign of approval and reminded them that the community relies on them and their decisions.

Wade Sorenson, 1456 Sophia Drive, noted that he had provided comments that have been included in the packet. He stated that he felt that there was a good open discussion last month with a lot of talk about the size of the building. He stated that, as proposed, it will be the largest apartment building in the City. He stated that he believes that 4 of the 5 Planning Commissioners were very concerned about the size of the proposed building and this item was not simply tabled for landscaping requirements. He stated that despite the fact that this was a large concern at the meeting, the developer has not addressed that issue or done anything about the size of the building. He stated that it feels as though in the last month the City and developer have spent their time reshaping things in order to make this fit but the building is still the exact same size. He stated that he would love to see the City take the side of the residents and not the side of the developer even though there would be financial benefit to the City to get this built. He stated that he believes the residents perspective should be primary in the City's actions which does not feel like it is happening. He noted that there is a new condition #14 that was added that he has not seen in any other documents. He read aloud the language from the condition and stated that he believes it is talking about Clover Preserve and Clover Ridge but feels it is vague. He stated that this property was developed as part of Clover Preserve 2nd Addition and one of the stipulations in there was that the outlot wetlands were supposed to have been deeded to the City back in 2002. He stated that if that had happened many of the issues being discussed today would not be issues and noted that he wished the City would have followed through on that at the time. He explained that he also has issue with the idea of 40 units/acre as the allowed density. He shared a portion of the language used at the concept plan and noted that it had failed to mention that the Clover Ridge concept plan also calls for 24 units/acre as the density. He stated that this information is taken directly from the Clover Ridge concept plan which the City approved in May of 2000. He stated that the City Code is pretty clear that when there are conflicting requirements you have to take the most restrictive, so he would argue that the appropriate density in this situation would be 24 units/acre, so their proposal would not be in compliance. He referenced comments in his correspondence that referenced various City Codes and reiterated that based on all of this information he feels that this proposal should be looked at with 24 units/acre and not 40 units/acre. He referenced City Code and City zoning definitions

related to floor area ratio (FAR) and explained that it explicitly says that FAR is the total floor area on a zoning lot divided by the total lot area of the zoning lot, or in the case of a planned development, by the net site area. He stated that he would like to know what the developers net site area is because he feels they have been using the wrong metric in their calculations by saying this is a 27 acre lot when the zoning lot is only 5.58 acres. He stated that if the lot is 27 acres, he would like to know what the useable open space amount is because by his calculations it is about 4.2 acres. He stated he was begging the Commission to get clarity on the lot size, the gross site area, and the net site area. He stated that the wetlands and non-buildable areas need to be taken out of consideration and not included with the zoning lot number. He reiterated that he felt the FAR should be based on 5.5 acres which means this proposal does not meet that City requirement. He noted that he understands that this land has been zoned for apartments for the last 20 years and clarified that he was not saying that there shouldn't be an apartment here, but for that same time period he has expected the City to follow the zoning requirements that have been on the books for the length of time. He stated that if the City followed those requirements the outcome would be a very differently sized building than what has been proposed. He stated that he is not trying to imply that Chase is a bad company and noted that his home was built by them, but he feels this building just needs to be smaller. He referenced his written statement and noted that if this was 6.25 acres with 24 units/acre that would mean the building would be 150 units total which, in his opinion, is the maximum number that they should be targeting. He stated that it appears as though the City is trying to change the math in order to make this proposal work. He reiterated that he would like the City to find what will work for everybody and not just take the developer's side.

Travis Olson, 1439 Sophia Drive, noted that he wanted to touch on the platting from 2002 and explained that just the lower wetlands area was to be deeded to the City and not the higher area. He stated that it was just the outlot and the outlot for the Jonathan mailbox that was to be deeded. He stated that there are still clarifications that need to be made surrounding this issue. He expressed his appreciation to Chase for at least 'changing the lipstick on the pig' because the colors are more in tune with the City and it looks more appealing, but it is still too big. He stated that City Planner Hanson had touched on the communication side of things and noted that he felt the neighborhood meeting was not necessarily a 'listening' meeting but more of them telling the neighborhood what they were going to do. He stated that he also felt that they belittled the residents and attempted to make them not feel listened to and also spent time bashing the apartments to the north and Jonathan Flats about how unappealing they are. He stated that he didn't see any of that as very 'neighborly' but instead as somebody trying to build themselves up as better than everyone else which is just not Chaska. He stated that the timing for communication was awful and referenced the numerous irregularities that can be found in the narrative from Chase and gave the example of the parking lot being shown in two different ways so it is unclear which plan is being asked for approval. He stated that it feels as though this project is being rushed through. He noted the large elevation change from the street to the wetlands and while they have included sidewalks to go from their courtyard area to the regional trail, they will need to install stairs in order to get down to the regional trail which makes it difficult to be useable for anyone with limited mobility. He stated that in his opinion, they cannot really use that hill as their 'open space' because it is not useable for all residents. He reiterated that the wetland area should not be included in this discussion and should have been taken care of by the City 20 years ago and because it wasn't, it is allowing it to muddy the waters in this situation. He stated that they have the ability to stop it and noted that when they have come

before the City they have made statements that there are no significant trees on that 5.6 acres, but now the latest information shows 148 caliper inches that were found that they are taking credit for in their required tree coverage. He stated that he also feels their math is wrong because if you add up all the caliper inches that are listed, it comes up to 456 not 488, and the trees that they are taking credit for are actually located in the wetland. He reiterated that they need to reduce the size of the apartment footprint to be able to get in line with the tree requirements. He stated that he is in the finance field and lives in the 'trust, but verify' mindset on information that is presented to him. He reiterated that irregularities that can be found in their narrative and numbers that bounce all over the place and noted that just throws up a lot of red flags for him at what they can be trusted about from what has been presented and 'sold' to the Commission and the Council. He stated that, as Mr. Sorenson stated, the neighborhood knows this will be an apartment complex and that is not what they are fighting against. He stated that they are only asking the City to make the project fall within the zoning requirements.

Greg Butler, 1355 Romeo Court, stated that mentioned in the presentation was that there are 313 parking spots which leads him to the assumption that there will be 313 cars cruising around the streets. He stated that the assumption that all those cars will go to Pioneer is probably not a good one because he thinks it will actually go down Clover Ridge to Hundertmark which means it will be where Clover Ridge Elementary, a condo, apartments and townhomes within a small roundabout circle. He stated that this area is already congested so this will create more of a problem in that area, especially when there are young students in the area. He stated that there is also a roundabout at Clover Ridge and Shakespeare which is great for a small residential community, but is ill equipped to accept another 300+ vehicles. He encouraged the Commission to listen to what he and the others have been saying about this project and realize that by approving it, this may create an unsafe traffic situation that the City enabled. He stated that he encouraged the Commission not to approve to size of this plan.

Steve Dummer, 2913 Clover Preserve Drive, stated that he echoed Mr. Butlers' sentiments because some of this area is already an urban race track and adding 300+ vehicles to the neighborhood does not make sense to him. He stated that he agreed with the statements that had been made that this proposal is just too big with too many vehicles for the size of what is there.

Jennifer Stoltz, 2901 Clover Preserve Drive, noted that most of the things she wanted to say have already been said. She stated that traffic is a huge concern because of all the youth in the neighborhood and does not feel the road or infrastructure could support adding 300+ cars and their guests. She stated that the size of the building is way too large and stated that she would like to know what the true buildable area is on the lot. She stated that people keep hearing the reference made to 27 acres, but asked how much of that area was actually buildable and noted that she feels that is where everything should be calculated from, not on the non-buildable area. She stated that the neighborhood knows that an apartment building will be going in and noted that she supports growth because she has been a lifetime resident of Carver County, but stated that the plans need to take into consideration that this should fit in with the townhomes and the single family homes that are there and not just bring in a giant apartment complex and not have it stick out like a sore thumb.

Danelle Goemer, 1452 Sophia Drive, expressed her concern with the amount of traffic this proposal would bring to an area that has this amount of children that walk along that street in the mornings and afternoons for school. She stated that it is already a little bit scary so bringing in a huge, monstrous apartment with all those cars is even scarier to her as a parent.

Acting Chair Lacey asked if there was a representative from Chase present that could address the Commission.

Joe McElwain, representing Chase Real Estate, noted that he thinks it is important to discuss the acreage because that appears to be one of the primary concerns being raised. He referenced the diagram on their plat that had been submitted to the City and stated that this is a 27.6 acre lot, less the D.R. Horton inroad which is 4 acres, and 18 acres of wetland and trails that is being dedicated back to the City, which is a net of 5.6 acres. He stated that based on meetings with City staff, engineers, and the watershed district, the decision was made that they will be dedicating the 18 acres and noted that originally this site was a net 9.9 acres. He explained that they were originally going to buy 9.9 acres up to the wetland boundary, but through their City meetings, it did not make sense to include all of the setback for the trail, the trail right-of-way, and the south man made pond. He stated that he could plat the property as a 9.9 acre parcel and provide an easement for the trail and the man-made pond, but they felt it did not make sense. He stated that the first plan they had presented in December was for 240 units because they were looking at an almost 10 acre site. He stated that then they met with the City and reviewed the comments that had been made, they moved forward with a 160 unit building which is what they presented at sketch plan. He stated that footprint was 47,000 square feet which is still the same as what they are presented today, but is now 174 units because he has a few smaller apartments mixed in, but reiterated that the overall footprint remains the same. He stated that they worked through many of the comments made by the Commission such as setting back a lot of the court to make sure that there was less of the building facing the wetlands. He explained that they had kept the building at 4-stories, because the Code allows for 4-stories and noted that they felt a pitched roof made more sense with their architecture. He stated that he understands that what he is saying is not what everyone wants to hear, but he feels he showed the City their best plan first because he took the responses from December. He noted that their setbacks are proposed at 80 feet back from the street when they could be as close as 30 feet back from the street.

Acting Chair Lacey stated that many of the residents have expressed their concerns about the size of the building and traffic which are very important issues to the people that will be their neighbors. He stated that their original proposal in December was for around 160 units and tonight the neighbors have stated that something in the 150-160 range would be appropriate and stated that he is curious to see what the developer response would be as to why that cannot be accomplished.

Mr. McElwain stated that they can always consider less apartments or more apartments and explained that the unit mix that fit the footprint that was approved is what they based their building on so there was a certain mix of 1 bedroom, 2 bedroom, and 2 bedroom plus units. He stated that one of their questions from the neighborhood meeting was whether the thought was that it was too big square footage wise, or too big apartment units-wise.

Commissioner Rylee explained that his goal as a Commission is to answer questions for residents that are here at the meeting that are concerned about the project. He asked about the plans for the parking lot configuration and if there was a loop or not.

Mr. McElwain explained that there are many technical reasons for why those types of things change in the plans, in this case it was because they could not fit their stormwater so the pond had to get larger and they also wanted more landscaping. He stated that they reduced the parking lot size, but their plans do currently meet fire safety code because there is a drive-thru and they can back in.

Commissioner Rylee asked about access to the regional trail and the statement made about stairs versus an ADA compliant ramp.

Mr. McElwain stated that he will not be able to get a building permit without meeting accessibility code. He noted that at the neighborhood meeting he tried to add a dog park, but their architect said it wasn't accessible. He stated that they have more work to do in order to meet accessibility code. He explained that they did have stairs that come off the pool due to egress from people who are on the patio. He stated that accessibility will be for people from the elevators down to the path and noted that they will have to build a ramp somewhere off of their main hallway.

Commissioner Rylee stated that he does have more positive things to see about this proposal than he did last time, so he recognizes the fact that the developer had addressed a bulk of the comments that were made at the last meeting, for example providing something that is architecturally more in line with Clover Ridge. He stated that one of the design details that he would like to make a suggestion on is changing the balcony hand rails to white rather than black to match. He stated that in his mind, he thinks the developer has come about 95% of the way to the goal.

Commissioner Baswa stated that at the last meeting they were asked about a tot lot and asked if they had changed any of their plans to accommodate that possible use.

Mr. McElwain stated that he called all of their property managers to gather information. He stated that they build their buildings based on data and gave the example of their 470 unit property in Victoria Park that only has 4 families in residence. He stated that in their 8 years, they have never had the request to have children's playground equipment because their demographics do not support it.

Commissioner Baswa stated that it is not possible to know who will actually be the residents and expressed concern that if it was not added now, it would be too late to add it later if they, for example ended up to 20-30 families with children that moved into the building.

Mr. McElwain explained that they do have things like a yoga room that has play mats so it can be used for that purpose as well as the pool and the courtyard with bag games. He reassured the Commission that they will always want to meet their residents needs and explained that their number one request is to add dog runs to the property.

Commissioner Baswa asked for details of the traffic study that was noted at the last meeting since there is so much neighborhood concern about the traffic.

Community Development Director Kabat stated that there was a traffic study done which included the D.R. Horton single family neighborhood project, this apartment complex and also the apartment complex that is proposed north of the tracks. He stated that the conclusion of the traffic analysis was that there would be increased traffic, but the existing road network was designed to accommodate that traffic.

Commissioner Baswa asked if there was any consideration given to children traveling to and from school and asked if there were any plans to address those concerns.

Community Development Director Kabat explained that he lived in the neighborhood and he has learned to take a different route when kids are heading to school and believes that some of this retraining will occur because he would agree that it is very busy there. He noted that the City has been working with the school district, in particular the elementary school, on some safe roads to school measures. He stated that they are not ready to implement anything yet, but it is definitely a discussion that has been occurring. He reiterated that the traffic study analysis determined that the existing road network can accommodate the increased traffic.

Acting Chair Lacey asked if there were any additional meetings planned with the neighborhood.

Community Development Director Kabat stated that for developments that are proposed, it is a situation where there is 'strong encouragement' that neighborhood meetings be held, typically along with the concept plan. He explained that this process is a bit different in that the developer was not yet identified when the concept was presented. He stated that there was a neighborhood meeting that happened at the concept plan phase and then the developer recently held another meeting. He reiterated that holding neighborhood meetings are not a requirement but are always encouraged. He noted that typically, as a project heads into the final stage, there isn't another neighborhood meeting that is held because it is really getting into finishing up the details.

Acting Chair Lacey stated that he thinks neighborhood meetings are very important because there have been some very specific and passionate concerns raised about the project as proposed. He stated that he understands that everyone will not agree on everything, but feels it is important to align as closely as they can because it will be to everyone's benefit, so his recommendation is that they continue holding neighborhood meetings for this purpose.

Commissioner Urbanski asked about the mix of apartments.

Mr. McElwain stated that he doesn't have the exact number off the top of his head, but in general, there are about 45 - 2 bedroom units on each corner that are 1280 to 1400 square feet and a lot of 1 bedroom plus den units because there is a large market now for people who want to work from home.

Commissioner Urbanski stated he would like to know, from an affordable housing standpoint, how many small units they will have available.

Mr. McElwain stated that they do not do the super small units and are planning 12 units that are 19 feet wide by 35 feet deep.

Commissioner Urbanski stated that he appreciated those plans because he feels it is a style needed in the community.

Commissioner Rylee stated that there were a number of comments related to traffic and one made by Mr. Dormer touched on it being a race track coming down Clover Preserve Drive which hit home with him. He asked if there was an action item that the City could take from that comment to look at some traffic calming measures for this area.

Community Development Director Kabat noted that the opportunity to implement traffic calming is usually through the reconstruction process. He stated that what they could do in the interim period is utilize the speed trailer.

Commissioner Rylee stated that he thought one of the other neighborhoods where traffic calming was discussed had talked about doing things like narrowing of lanes or using speed bumps.

Community Development Director Kabat stated that the Clover Ridge neighborhood already has some of the most narrow streets in the City so there would not be a lot of wiggle room to narrow them further.

Commissioner Rylee noted that he was not asking staff to solve the problem tonight, but would like them to work with the residents to address their concerns. He stated that the comments made by Ms. Sanchez are recurring with regard to public notifications and feels the current practices do not meet with the modern day and age. He stated that this same issue has come up frequently in his short time serving on the Commission and asked that the City begin posting stuff on the website and allow it to be picked up by Chaska Uncensored, Life in Chaska, as well as social media. He stated that he would like the City to give developers that conduit and forum to get notifications of neighborhood meetings out so they are not just sticking notes in mailboxes. He stated that if residents walk into the meeting feeling like the City or the developer are hiding things from them or didn't really want them to show up, he feels it sets the whole process back. He stated that he understands that the notification of people within 350 feet of the subject property is done with a mailing list and the newspaper, but he feels, as a community, Chaska can do better than that. He stated that he would also like to address the arguments made by Mr. Sorenson and Mr. Olson and asked why Outlot A, as part of Clover Ridge 2nd Addition, had a condition that it would be deeded to the City but did not happen.

Community Development Director Kabat stated that this was also a topic of discussion at the concept plan and again this evening before they recessed the meeting because of the weather. He explained that his understanding is that at the time the Outlot was not designed in a way that it was delineating the wetland from the developable area, so the decision made at that time was to wait until development was occurring and it would be delineated and the appropriate piece of property would then be deeded to the City. He noted that the City's intent is never to take developable property in those situations. He stated that there is not a requirement that the developer deed the wetland to the City.

Commissioner Rylee stated that the math has gotten 'fuzzy' and noted that he thinks that is something that does need to be reconciled. He stated that he thinks it was a good thing that the driveway has been taken down the north side to address the concerns about Sophia Drive but thinks that mixing the wetland into the calculations makes the math fuzzy and believes the math should be redone without it.

Anthony Nagassar, 1475 Sophia Drive, stated that the main concern that they all have is with the size of the building and stated that it seems to be the elephant in the room that nobody is talking about. He stated that that Mr. McElwain had stated that they could reduce the number of units but would maintain the size of the building footprint. He asked if anything would be done to reduce the size of the building which is what the neighbors are concerned about because they feel the proposed building is just too huge for this location.

Mike Benson, Chaska Investment Limited Partnership, stated that he worked with the original development team on this project. He stated that the Cloverfield master plan was conceptualized in 2000 and his land planning architect, DSU, created this concept with the guidance of City staff. He stated that it had originally been designed as transient oriented development with a diverse mix of housing from affordable up to multi-family and included the donation of land that his group made to the City for the elementary school, wetlands, and various tot lots. He stated that he personally traveled to Calgary with former Community Development Director Ringwald to view similar developments with this same theme. He noted that the Clover Ridge 2nd Addition was zoned PMD 15 at the time and noted that the explanation from Community Development Director Kabat about why the land was not deeded to the City at the time is completely accurate. He stated that relating to the request to go back and redo the math, he would ask that it be made clear to the Commission, the City Council, and the public exactly what the Code says. He explained that his understanding, based on 10 acres, is that the guidelines are 18-24 units/gross acre. He asked if his understanding was correct that it is for gross acreage and if that included wetland.

City Planner Hanson stated that it is gross acreage and does include wetland.

Mr. Benson stated that he wanted to make that very clear to everyone and noted that the math referenced by Mr. Sorenson was not correct. He noted that in December of 2021, he put forth a concept with a 4-story, 162 unit building which was approved by the Planning Commission and the City Council. He stated that at the time he did not have any developers interested in the project and did not anticipate developing or selling the land for 2-3 years which was based on a market study conducted by Maxfield Research. He stated that in January and February his phone started to ring with multiple offers which was unanticipated and he eventually reached an agreement with Chase. He stated that D.R. Horton had approached his group earlier in 2021 about the access road bifurcating the property and intersecting with Clover Ridge Drive. He stated that he had originally rejected the idea because he was afraid that it would affect the buildability of Outlot A, however, at the request of former Community Development Director Ringwald and D. R. Horton, they suggested a meeting to try to come up with a solution where he could develop an apartment building, D.R. Horton could have a new access that satisfied traffic concerns. He stated that in attendance at these meetings were the Kelzer family and City staff who recommended that he engage the services of an architect to further study the parcel. He stated that the idea was that if he could design an apartment building that the City would support

and meet his development expectations and the vision that they had in 2000, this would be a win/win situation. He stated that what is being presented is very much in line with what they have had envisioned for the last 22 years and meets all the regulatory and Code requirements. He stated that the project also has full City staff support as well as support from the Jonathan Association. He explained that he feels it will be a wonderful project that will complement the housing mix within Clover Field and complete the vision and master plan of Clover Field.

Commissioner Rylee stated that this is a beautiful community and expressed his appreciation to the Kelzer family and City staff because this neighborhood is something that Chaska can be really proud of and it has enriched the lives of many families, which is why there is this kind of turn out by the residents, because they want to protect it.

Commissioner Urbanski stated that in 2004 he lived in a different city and served on their city council and explained they took a bus tour to Clover Field so they could try to emulate it in their city. He stated that he has been involved in a lot of these kinds of discussions over the years and has seen the kind of results that come from the developer and the feedback from the residents. He stated that he commended the developer for coming up with ideas that mean this neighborhood is going to look pretty good and noted that the Commission is a bit handcuffed in what they can say yes or no to.

Motion by Commissioner Urbanski, second by Commissioner Aasen, to recommend to City Council approval of the Preliminary Site & Building Plan and Preliminary Plat for a 175-unit apartment building, subject to the following conditions:

1. Approvals shall be based on the following graphic exhibits:
    a. Narrative (pgs 1-11), prepared by Chase Real Estate, dated March 1, 2022
    b. Title Sheet (pg C1.0), prepared by James R. Hill, dated March 23, 2022
    c. Existing Conditions (pg C1.1), prepared by James R. Hill, dated March 23, 2022
    d. Site Information – Drainage Maps (pgs C1.2-C1.3), prepared by James R. Hill, dated March 23, 2022
    e. Preliminary Plat (pg C2.0), prepared by James R. Hill, dated March 23, 2022
    f. Erosion & Sediment Control (pg C3.0), prepared by James R. Hill, dated March 23, 2022
    g. Erosion & Sediment Control Notes (pg C3.1-C3.2), prepared by James R. Hill, dated March 23, 2022
    h. Erosion & Sediment Control Details (pg C3.3), prepared by James R. Hill, dated March 23, 2022
    i. Grading & Drainage Plan (pgs C4.0-C4.2), prepared by James R. Hill, dated March 23, 2022
    j. Utility Plan (pg C5.0), prepared by James R. Hill, dated March 23, 2022
    k. Site Plan (pg C6.0), prepared by James R. Hill, dated April 6, 2022
    l. Overlay Plan (pg C6.1), prepared by James R. Hill, dated March 23, 2022
    m. Construction Details (pg C7.0), prepared by James R. Hill, dated March 23, 2022
    n. Landscape Plan (pg L101-L103), prepared by KW Architects, dated May 5, 2022
    o. Landscape Details (pgs L104-L105), prepared by KW Architects, dated May 5, 2022
    p. Turning Movement Exhibit, prepared by James R. Hill, dated March 23, 2022
    q. Photometric, prepared by Davis & Associates, Inc., dated February 25, 2022
    r. Site Sections, undated
    s. Exterior Elevations (pgs 1-2), prepared by KW Architects, undated
    t. Exterior Materials, prepared by KW Architects, dated March 12, 2020
    u. Exterior Materials – Precedents (pgs 1-2), prepared by KW Architects, undated
    v. Floor Plans (pgs 1-5), prepared by KW Architects, dated March 23, 2022
    w. Gallery Chaska – Monument Sign Design, dated March 2022
2. Adherence with the City Engineer's Memo dated April 13, 2022.
3. Adherence to the City's Boulevard Tree Policy and local street section design.
4. Provision that boulevard trees are placed between the sidewalk and street.

5. Provision of sidewalks on both sides of all local streets.
6. Adherence to the following setbacks for The Gallery Chaska Apartments:
    a. Front: 30 feet
    b. Rear: 20 feet
    c. Side: 20 feet
    d. Side (corner): 20 feet
    e. Wetland: 30 feet
7. Prior to final plat approval, developer shall enter into an agreement with the City for the provision of necessary infrastructure and associated development costs, including parkland fees.
8. Provision of a storm water management plan meeting City and Carver County WMO standards.
9. Provision of meeting all wetland conservation act requirements prior to final submittal.
10. Provision that all mechanical equipment will be fully screened from view.
11. Provision that section 15.28 Special Regulations are complied with.
12. Provision to obtain a variance for the parking allocation under requirements for multi-family use, and to be applied for at final submittal.
13. Provision of a Conservation Easement over the preserved wetland area, and to be addressed prior to final plat recording.
14. Provision to comply with any applicable and surviving requirements imposed by prior developer's agreements for Clover Field, Clover Preserve, and Clover Preserve Second Additions.
15. The resolution of any items of concern identified by the City Planner, City Engineer, or City Attorney prior to approval of the final plat.

Motion carried 6-0-1 (Commissioner Olson abstained).

Commissioner Olson returned to the dais.

7B. PUBLIC HEARING: Recommend Approval of the Preliminary Site and Building Plan and Zoning Ordinance Amendment (ZOA) for the Chaska Tech. Center/Amcon Construction/PC #2022-26

City Planner Hanson presented the item to the Commission and noted that this item would come before the City Council on May 16, 2022.

Acting Chair Lacey asked about the Class 1 masonry and if it was already a requirement.

City Planner Hanson confirmed that it was already a condition of approval.

Commissioner Urbanski asked about the location where the truck lane will come back out and whether it would interfere with the 6 or 7 spots in front of the liquor store.

City Planner Hanson stated that it would not interfere and explained that as of right now, those stalls will remain and the truck access will not impede or impact the layout.

Commissioner Urbanski stated that he knows 18 wheelers can take corners really wide and wanted to make sure it didn't end up causing problems.

Acting Chair Lacey opened the public hearing at 9:36 p.m.

There being no one present or on-line who wished to comment, Acting Chair Lacey closed the public hearing at 9:37 p.m.

Motion by Commissioner Rylee, second by Commissioner Gaare to recommend approval to the City Council of the Preliminary Site & Building Plan for Phase III of the Chaska Building Center (Chaska Tech Center), subject to the following conditions:

1. Approvals shall be based on the following graphic exhibits:
    a. Project Narrative (pgs 1-3), submitted by Amcon Construction, dated April 27, 2022.
    b. Existing Conditions Plan (pg A103), submitted by Amcon Construction, dated April 27, 2022
    c. Site Forces Exhibit (pg A102), submitted by Amcon Construction, dated April 27, 2022
    d. Existing Condition Survey, submitted by HTPO, dated April 5, 2022
    e. Grading & Erosion Control Plan (pg C1), submitted by Elliot, dated April 27, 2022
    f. Site Utilities & Stormwater (pg C2), submitted by Elliot, dated April 27, 2022
    g. Overlay Plan (Landscape and Site Utilities) (pg C3), submitted by Elliot, dated April 27, 2022
    h. Landscape Plan (pg L1), submitted by Elliot, dated April 27, 2022
    i. Site Plan (pg A100), submitted by Amcon Construction, dated April 27, 2022
    j. Site Photometrics, submitted by Aid Electric, dated April 8, 2022
    k. Elevations (pg A301-A302), submitted by Amcon Construction, dated April 27, 2022
    l. Perspective (pg A303), submitted by Amcon Construction, dated April 27, 2022
    m. Floor Plan (pg A101), submitted by Amcon Construction, dated April 27, 2022
2. Adherence with the Engineers Memo dated May 11, 2022.
3. Compliance with the County Memo dated February 2022.
4. Provision/modification of any drainage and utility easements as required by the City Engineer in the course of his review.
5. Provision of easements for the private drives (vehicular cross access easements) and utilities (utility easements) that service this lot, to be recorded with the plat.
6. Coordination with the City Engineer with regard to utilities, grading and drainage.
7. Installation of all site lighting at a 0 degree angle with the light source fully concealed.
8. Utilization of modular face brick or natural stone as a Class I material.
9. No exterior storage will be permitted.
10. Provision of the required 50 feet setback from the edge of the top of the creek bank to all buildings and impervious surfaces.
11. Provision of hydrant placement needs to accommodate City standards for hydrant placement and fire code standards.
12. Provision to submit Utility and Site Plan As-Builts prior to issuing a building permit.
13. Any and all building signage shall be submitted separately, meet the sign ordinance, and shall obtain sign permits prior to installation.
14. Provision that signage for all tenants to use similar signing methods and design.
15. Provision that monument signage adhere to 10 foot property line setbacks.
16. Provision of a storm water management plan meeting City and Carver County WMO standards.
17. Compliance with applicable zoning requirements, in particular Section 15.28 (Special Regulations).
18. Provision that all mechanical equipment will be fully screened from view.

19. Compliance with Section 15.28.120 Building Design/Materials and Site Design and to be shown at final submittal.
20. Coordination with Electric Department on service locations.
21. Elimination of un-used driveway accesses on Chaska Boulevard or Fire Lane prior to issuance of a Building Permit.
22. Final Plat to list City of Chaska as a part of the plat.
23. Provision to provide accesses into the site consistent with Carver County's guidance and requirements.
24. Provision of a truck lane on the north side of the site to be at least 24 feet wide.
25. Provision of a truck turning exhibit to be submitted at final.
26. Provision of irrigation for the landscaped and sodded areas of the site.
27. Provision that boulevard trees are shown between the Fire Lane sidewalk and curb, and to be shown on the final plans.

Motion carried 6-0-1 (Commissioner Aasen abstained).

Motion by Commissioner Olson, second by Commissioner Urbanski, to recommend approval of the Zoning Ordinance Amendment (ZOA) to PMD-21.

Motion carried.

7C. PUBLIC HEARING: Recommend Approval of the Preliminary Plat for the Eitel House/Jonathan Association/PC #2022-27

City Planner Hanson presented to the Commission and noted that this will appear before the City Council on May 16, 2022.

Commissioner Aasen recused himself from the discussion.

Acting Chair Lacey asked if the design of the garage was being done preemptively for the potential buyer.

City Planner Hanson stated that this will be a private home and explained that the design of the garage is currently not defined and believes they just wanted input on the general location of it because ultimately, it will be based on whoever ends up buying it.

Acting Chair Lacey stated that he wonders how littered the path may be for someone to get this approved because it is a historic home and if it may effect the sale.

City Planner Hanson stated that this information would be one of the things that would need to be disclosed to a potential buyer.

Community Development Director Kabat noted that one of the steps that occurred before this meeting was that this was taken before the Historical Preservation Commission and they have already weighed in on the location.

Commissioner Rylee asked if the process was for the potential home owner to go the Historical Preservation Committee and once they received approval from them, they could receive a building permit and it would not need to come before the Commission.

City Planner Hanson confirmed that this was correct.

Commissioner Olson stated that this is a unique situation and trying to make something out of it which is interesting to see. He asked how the proposed driveway will interact with the trail and how they will delineate between their front yard and the park space.

City Planner Hanson stated that speaking to the trail component, they have generally shown where the driveway could go which would be parallel to the trail but noted that there will need to be some 'rejiggering' of where the pedestrian trails flank the site.

Community Development Director Kabat noted that this is one of the items that is listed within the conditions.

Acting Chair Lacey opened the public hearing at 9:51 p.m.

Jeremy Landkammer Ely, 1368 Romeo Court, President of Jonathan Association, stated that he wanted to highlight the community involvement with their members that led to this decision. He explained that it had been about a year since the Eitel House Committee was formed and through their work, they heard loud and clear that the community loves the house and does not want to see it torn down. He noted that the reality is that the house has no useful function for the Jonathan Association anymore and they ended up landing on the idea of having some preservationist come in and to the work to preserve it and become a member of the Jonathan Association. He stated that he just wanted to make sure the Commission knew about their efforts to listen to the community. He explained that they are working on the trail piece of the puzzle and noted that it is challenging in the neighborhoods that do not have sidewalks. He stated that they have been having discussions about how they connect the trail to the tot lot and it may be a sidewalk. He noted that there is also a bit of a retaining wall issue that they have to work with in order to make the connection but assured the Commission that Jonathan Association is willing to do the work to make sure that this all ends up making sense for all parties.

Commissioner Rylee commended the maintenance forces from Jonathan Association that were out sweeping sidewalks today. He stated that it is nice to see that they really care.

There being no additional comments, Acting Chair Lacey closed the public hearing at 9:55 p.m.

7D. Recommend Approval of the Concept Plan for Block 42 in Downtown Chaska/Community Asset Development/PC #2022-30

City Planner Hanson presented to the Commission and noted that this would come before the City Council on May 16, 2022.

Acting Chair Lacey asked if the use of the gym would remain as a gym or if it would be remodeled into a rentable event venue and asked how that may impact the residents that live there as well with things such as parking.

Commissioner Urbanski asked if it may be possible to have a long-term maintenance agreement with Guardian Angels that they would be responsible for the upkeep of the gym until an end user comes in and purchases it. He stated that there are a few private residences here and asked how they felt about this concept plan.

City Planner Hanson stated that they have been hearing from the developer that they have been working together with those property owners and support the project.

Commissioner Rylee asked for clarification about the statement made regarding working on the Comprehensive Plan guidance for the site.

City Planner Hanson stated that it basically means how the City will guide this site because right now, the way the Comprehensive Plan guides it is public and semi-public as well as medium density residential. She stated that that the question is with the school no longer being there what the main goal is for the site.

Commissioner Rylee asked about the meaning of R-2 Medium Density residential.

City Planner Hanson explained that it is a spectrum and can range from single family to multi-family.

Commissioner Olson stated that what they are proposing to put into the block seems excessive and asked about the expectation and what is allowed when it comes to use of on-street parking for covering their needs for parking requirements.

City Planner Hanson stated that anyone can use on-street parking because it is public, but noted that there is not a defined understanding of how that will factor into this project yet because they do not know the end user, specifically for the gym space.

Commissioner Olson stated that he wants to make sure that it is very clear to the developer what is expected from them going forward.

Community Development Director Kabat stated that he believes that is something that has been expressed to the developer and there are a number of items included in the conditions of approval that also address this concern. He noted that staff does have concerns about a possible large traffic generator moving into this space, because that will impact on the neighborhood.

Acting Chair Lacey asked if there was a current traffic analysis related to the on-street parking and how it is currently utilized.

Community Development Director Kabat stated that is part of why they are asking for a parking needs analysis so they can see how it is used today and what the proposed use is expected to generate.

Commissioner Olson asked about the school portion and the apartments related to privacy and keeping it open because the apartments will actually be below grade.

Commissioner Rylee noted that he sees about 3 very different architectural styles and he feels that it should be consistent and respectful of the Guardian Angels school and that the developer should project some of those features through the townhomes and apartment buildings as well, such as the red brick.

Dave Pokorney, Community Asset Development Group, explained that Community Asset Development is the master developer which means they have site control for all of the property and they would be the purchaser. He gave an overview of the history on how they got involved in this project via discussions with the church about finding a final product that preserved the buildings but also allowed the church to be financially viable and noted that is one of the reasons that the gym area is very important to them. He stated that their vision is that when this project is done, it wouldn't really look any different than right now. He noted that they will need to find a way to install an elevator on the exterior but noted that they would like to bring back some of the historic feel. He stated that they feel the gym has been a key community gathering space and has been used that way since it was built in the 1950s. He noted that the Park Board had recently determined that they did not want to purchase it and explained that while they don't have final agreements in place, they do have 2 very interesting scenarios for its possible use. He stated that the required parking for this type of use would be 43 spaces which is their target, which means it will not be an event center or special occasion venue. He explained that they are not interested in tearing down the gym and mentioned that if this project is approved, their apartment building will be the only one in downtown that meets their parking requirements on site rather than using on-street to meet those requirements. He stated that they agree with all of the conditions suggested by staff except the condition of requiring the school parking. He stated that the plan for the school building would be more affordable rents, but not subsidized and gave the example of a 2 bedroom unit costing between $1,200-$1,300. He explained that the 44 unit building is what he calls a 'boutique' apartment that is upscale and its biggest amenity is that people will be able to walk to places downtown. He noted that this building would be a mix of 1 bedroom/den and 2 bedroom units with rents on the higher end of the Chaska market. He reviewed the expected materials that they would use on the project and noted that the only thing they are asking is that the City permit 12 of the parking spaces for the school to be on site. He noted that the highest probability for use of the gym is for it to be owned by a local non-profit that will be geared towards youth athletics.

Commissioner Olson asked about what feedback Mr. Pokorny had gotten from the convent about this becoming office space and storage for the second level.

Mr. Pokorney explained that the convent is a 3-story building, with about 2,000 square feet on the first floor and would be a very functional office space. He noted that the second floor contains the 'cells' where the nuns lived which consists of about 12 rooms that are 8 x 10 so they do not foresee them being used as office space but instead could be used as storage. He stated that the 3rd floor is a large open space that was the gathering place for the nuns to congregate but explained that they do not have plans for this space yet. He noted that the gym, the school and the convent are right now just one building with one mechanical system and one fire protection system so keeping them under one ownership will be important, but noted that the gym may be able to be separated.

Commissioner Urbanski asked if there had been any neighborhood meetings held.

Mr. Pokorney stated that they did hold a neighborhood meeting last Friday. He stated that the feedback they received was that everybody would like to see the buildings stay and that they were concerned about parking and what activities would take place there.

Acting Chair Lacey opened the item up for public comment.

Jan Cody, 108 Cedar Street S, stated that she was concerned with parking because it is already a problem with the church and worries that people will just park in front of her house. She stated that she is concerned about the proposed density and the height of the building for the apartments. She stated that the amount of traffic this development will bring into the City will completely change the neighborhood and comment that if she wanted this high of density, she would move to Minneapolis.

Jim Fink, 205 Elm Street N, stated that he has been a member of this community for a long time and lives about a block away from this project. He stated that he was not aware that there had been a neighborhood meeting and noted that his home and property has been in his family since the 1800s. He stated that he is happy that there are plans to preserve the school, but is not happy that there will be some historic homes torn down. He stated that he also has concerns about the height of the apartment building and agreed that he also has issues with people parking in front of his home when the church has had events. He stated that it does not create a problem for him, but knows a lot of the neighbors have concerns about that item.

Commissioner Rylee asked if it was common in the neighborhood that their primary parking spot was in front of their home.

Mr. Fink stated that it is common and explained that he had a driveway, so it did not cause him any problems. He questioned why when these types of things are going on in the community, people are not invited to the meetings and stated that he felt that was a big problem. He stated that he found out about this problem one of the neighbors. He stated that he also feels that there should be a different set of rules for the downtown area and feels that the City has already lost a lot of buildings so he is happy that they want to preserve some of the buildings. He noted that many of the homes are built right up to the property line and noted that his garage is built 8 inches off of the property line.

City Planner Hanson noted that there was someone on Zoom who has asked to speak.

Jeannie Madigan-Florea, 300 West 2nd Street, stated that they had lived there for about 20 years and agreed with the other commentors that she is happy that they are preserving the school. She stated that they also had not heard about the May 6, 2022 neighborhood meeting, but did receive a letter referencing tonight's meeting. She stated that she does not feel that the neighborhood was properly represented at the neighborhood meeting. She explained that she was concerned about traffic and parking and was under the impression that the density for residential was 24 units/acre which if followed would only be 48 units and not the 73 that is being proposed. She stated that it is already hard to park and this plan will create a lot of traffic and noise and reiterated that there are a lot of concerns here and asked the Commission to consider

the people that have been living here for many years. She stated that they have been paying taxes for a long time and want to preserve the downtown Chaska feel of the neighborhood.

Brad Geshtact, 16980 County Road 40, Carver, stated that he is a parish councilmember and a parishioner of Guardian Angels and explained that his family has been involved there for a long time. He stated that his family name is included on one of the windows so he has a vested interested in preserving the historic nature of everything. He stated that he opposes this plan because he would like to see the school reused as more of a parish community center rather than the proposed development. He stated that he is also a member of the Knights of Columbus and they hold 3 fish fries there every year. He noted that until Covid, there used to be beef and sausage dinner that has happened for the last 75 years each January, so there is a long heritage of community events that have happened in those buildings. He stated that he would like them to be preserved and used more as an event center than as a gym. He stated that there are other groups it could be rented out to such as the Boy Scouts. He explained that there is also a playground in the corner that nobody has mentioned even though there is no other children's play area in this section of the City. He reiterated that he would rather see this preserved as it is and for the parish to fix it up and maintain it as a community center. He stated that they are currently using the convent space as an office and the school is being used weekly for religious education and choir practice. He stated that the gym is used off and on for events but noted that in order to still hold those events they will need to have the kitchen space as well.

Leo Parvis, 320 West 2nd Street, stated that he and his wife have lived in downtown Chaska for 20 years. He stated that he is about 100 yards away from this project and stated that as mentioned by his neighbor on Zoom, parking is a major problem. He thanked the Commission and staff for sharing all the information they shared today because he had previously not had any of it. He stated that he has seen one inconsistency that is not in sync with the master plan of the City. He explained that, in his opinion, preserving downtown Chaska is not bringing in 24 units and townhomes that will add to the population, environmental pollution, hazards, and noise. He noted that nobody has talked about the length of construction. He stated that they did not mention the multiple people that could be in these units and the number of family members and guests that could be coming to visit them. He reiterated that there is already a parking issue in downtown Chaska and these plans are not preserving downtown Chaska. He stated that he agreed with some of the issues already brought up, but would not waste time repeating them.

Julie Parvis, 320 West 2nd Street, stated that she agreed with everything that has already been said but wanted to reiterate the communication problem because as the Zoom caller stated, they also did not know about the May 6, 2022 neighborhood meeting. She stated that they also had not received the letter about tonight's meeting until last Saturday. She noted that in the body of the letter, if she were someone who was not familiar with this type of thing, she doesn't think she would have gotten past #2 because it stated that this would not be a public hearing. She explained that she would not have known that a public hearing is a legal term for a certain kind of meeting unless she had called the City. She stated that she suspects that is what happened with many of the neighbors and why they were not present tonight even if they received the letter. She noted that they talked to many neighbors who had not received any notifications. She stated that the letter does say toward the bottom that people would be allowed to be heard in person, but if they stopped at #2 they would not have known that. She stated that she and her husband made copies and distributed the letters themselves and there were other neighbors

who posted on Facebook. She stated that she thinks there also would have more people present tonight if not for the weather conditions. She noted that she feels this project is being pushed through in a hurry and stressed that she felt another neighborhood meeting was needed where more people are actually informed and can get involved and represented. She explained that they had moved downtown because they wanted to be in an old, small, downtown quiet neighborhood. She stated that they wanted to know their neighbors. She stated that they do park in front of their house and walk along the sidewalks and noted that they practically known everyone all around them and watch out for each other. She stated that if this complex is allowed to move forward she feels the City would lose a lot.

Acting Chair Lacey explained that he wanted to allay any fears that this project is a slam dunk and noted that the concept plan is the 1st part of a 3 part process for projects to move through the City.

Ms. Parvis stated that she still felt another neighborhood meeting was necessary.

Another member of the audience agreed and noted that they had also not been informed or invited to a neighborhood meeting.

Acting Chair Lacey noted that, as previously brought up by Commissioner Rylee, the system for notification of these types of meetings needs to be strongly studied and improved. He assured the residents that their voices were important.

Commissioner Urbanski asked if a neighborhood meeting was required at the concept plan phase.

City Planner Hanson explained that it is not required, but staff heavily encourages it. She noted that communication about a neighborhood meeting would be conducted by the developer and not the City. She stated that the City does help them put together the mailing list, but the developer is responsible for mailing them out.

Commissioner Rylee stated that staff has had quite a bit of success bringing various projects through this 3 step process and in some cases have had various delegates from the neighborhoods that are willing to spend the time to work with City staff and hold meetings to identify priorities and incorporate them into the process. He stated that just because there was a 'neighborhood' meeting held last week, that part doesn't have to stop. He stated that staff has demonstrated many times in the past that they want to work with citizens, especially if they can designate 2 or 3 individuals to work with the City and the developer to sort out these issues. He noted that he has seen this be successful and by the time the project gets to the final stage, everyone on both sides is happy. He encouraged the residents to get together and find 2 or 3 individuals that are passionate about this issue and have the time to invest in some meetings and assured them staff would be available to help guide this process.

Lisa Van Hofwegen, 301 West 2nd Street, stated that in evaluating the parking, she asked that they take into consideration the activities that are going on at Guardian Angels on a daily basis. She stated that the area is already congested and asked that the City consider this overall use when they are looking at parking.

Tom Brinda, 205 1st Street West, stated that he moved to the City in 2014 and came here purposefully because of the character of the town and what had been done. He referenced the curling center, and other buildings that have multiple uses, the parks, and open spaces and noted that he saw the commitment that the City had to those kinds of things. He stated that he was eager to be part of something like that and purchased his home which is an 1895 Chaska brick home that has been restored. He stated that he is passionate and has time and offered to serve in the capacity suggested by Acting Chair Lacey. He stated that he is near the playground and has a beautiful view of the steeple, which looks like it will disappear if he has understood the concept correctly with the building massing, which is he does not like. He stated that he feels there are some things that can be done architecturally and with landscaping to maintain some of the character of the residential neighborhoods and still accommodate the higher use residency that is being proposed.

Brett Amundson, 105 North Elm Street, stated that he feels a bit like the glass is half-full with this project. He stated that if they are able to keep the Guardian Angels building even if it is not economically profitable for the developer, he feels that it is central to downtown and thinks it would be fantastic to be able to keep it. He stated that parking is a problem, like others have already stated, especially when there are services and when there are Chaska Cubs games. He noted that in the summer, often times there are community events held in the town square which also create parking problems. He stated that in his opinion making an exception on the parking requirements would perhaps not be the best thing to do and would be very unpleasant if there were a bunch of extra cars trying to park every day. He stated that to him, if it was economically feasible, it feels like the best thing to do would be to make the new buildings just a little bit smaller and suggested 35 units rather than 44 and noted that the massing of 4 stories feels out of proportion and a 3-story building would fit better. He noted that he owns a high-end design building and remodeling firm that mostly work on historic homes in Minneapolis and St. Paul and the surrounding areas. He stated that the proposal just 'feels' too big and too tall, in particular. He stated that the City, thus far, has done a wonderful job keeping the character of the downtown area and stated that if they can keep the character, the massing, and address the parking, he thinks this project has potential to be a pretty good thing. He stated that he is very happy that the apartment building on 2nd and Pine may not be there. He stated that with this proposal, he thinks there are couple of bright spots in their plans, but also a few challenges and bumps in the road.

Acting Chair Lacey closed the public comment portion of the meeting at 11:18 p.m.

Commissioner Urbanski asked when the City has had the opportunity to redevelop and entire block of the City.

City Planner Hanson stated that the closest example would probably be The Landing building in downtown or perhaps the Chaska Event Center.

Community Development Director Kabat noted that there is one that is being pursued at the City Square West redevelopment project.

Commissioner Urbanski stated that this is a unique opportunity and he understands that there is both excitement and nervousness surrounding it. He stated that he would like to get more community input on this project before it moves much further forward.

Commissioner Rylee asked if he was saying that he did not think this project should move past the concept phase.

Commissioner Urbanski stated that at this point he would have a hard time voting to move it forward to preliminary.

Acting Chair Lacey stated that he agreed because he believes there are some issues that really need a second look such as parking and the gym usage.

Commissioner Baswa stated that there have been multiple instances reported that neighbors were not informed and able to give them input. He stated that he understands holding neighborhood meetings are not compulsory, but feels the City can help with some guidelines. He stated that the way people communicate has changed and now people are mostly using social media, such as Facebook and asked the City to find more ways to reach the neighbors and give them enough time to respond. He stated that he realizes that the City cannot enforce what the developers do for the neighborhood meetings, but feels like they can give guidance and find additional avenues of communication that will be more successful.

Community Development Director Kabat suggested that the Commission could take a look at conditions of approval and perhaps add items that would address some of the concerns and expectations being shared by the Commission. He noted that if the Commission thinks the things they are concerned about are too far away, then they could also consider tabling this item. He cautioned that if they do that they need to make sure that they are clear about the reason and what items they would want to see before it comes back in front of the Commission.

Commissioner Gaare stated that the concern she has is that this block is right in between the very historical part of the City and the newer development towards the river. She stated that she thinks there needs to be some sort of compromise and while she thinks it is great that they will keep the school building, with the addition of the townhomes and the apartment buildings, she is not sure that strikes the balance that she is looking for. She stated that there is an opportunity to save this piece of real estate and she does not want to lose that opportunity, but feels there is still some work that needs to be done.

Acting Chair Lacey reiterated that he thinks it is very important for the neighbors to be involved in this process and asked about the suggestion by staff to add additional stipulations and for this to move forward.

Community Development Director Kabat noted that he had jotted down the things he has heard from the Commission such as: parking; a desire to work with the neighborhood; and a need to work on the design to ensure that it ties in and complements what exists with the historic nature of the school and convent and the surrounding neighborhood. He stated that if these were the concerns he believes that they can be incorporated into the conditions.

Commissioner Olson stated that he agreed with the three things mentioned by Community Development Director Kabat but noted that on the design side of things, his concern is that it would also include not having a 44 unit apartment building and is something that is more cohesive with the surrounding neighborhood. He clarified that as long as that point is part of the 'design' condition then he could agree with it, but if 'design' is just changing the shape and color, his answer would be no because putting an L-shaped 44 unit apartment building with underground parking whether it is 3 stories or 4 stories, does not fit into the neighborhood that is currently there. He stated that he thinks the City needs to be mindful of the residents that are immediately surrounding this project. He stated that this is unique and the Commission is here to figure out the first step of many to figure out how this all will work. He reiterated that unless part of the 'design' condition would include eliminating the 44 unit apartment building and replacing it with something that is cohesive with the neighborhood, he would not vote for approval.

Commissioner Rylee stated that he agreed and noted that he wants them to go through concept, but does not want this to get to the preliminary phase and everyone ends up fighting over the 4-story building.

Mr. Pokorney stated that he has heard two significant issues being raised related to parking and the massing/size of the building. He stated that if they cannot solve the parking issue, they will not move ahead and do the preliminary site and building plans because that is a timely and expensive process. He stated that he would suggest that the Commission either vote to deny the concept plan or table it and give them time to address the parking issue better. He noted that if it turns out that there can be little or no redevelopment, this site has little or no value to a potential buyer and reiterated his suggestion for tabling or denial and noted that he would be fine with either decision.

Motion by Commissioner Urbanski to table discussion of the Concept Plan for Guardian Angels School & Convent Buildings and Block 42 until the next meeting, to allow for time for the developer to address the concerns raised by the Commission and ask that they ensure that the neighborhood can be more involved in the process.

Commissioner Olson asked if a month would give the developer long enough to address the concerns that have been raised.

Mr. Pokorney stated that the believes they will be able to address the parking situation and take a closer look at the gymnasium in a month but noted that a month may be too short of a time to look more closely at the architecture and design issues. He noted that there are some time constraints in their purchase agreement with the church, so they would like to find the concept that will work sooner rather than later. He stated that they will try their best to address as much as possible within the next month.

Commissioner Gaare seconded.
Motion carried.

Commissioner Gaare recused herself from the next agenda item.

7.E. Recommend Approval of the Concept Plan for Kusske Estates Property (Extension of The Harvest Neighborhood)/Tradition Development/PC #2022-25

City Planner Hanson presented the item and noted that it will be presented to the City Council on May 16, 2022.

Acting Chair Lacey asked about the reclamation process and asked when it was expected to be completed and questioned what the noise level of this operation would be.

City Planner Hanson explained that the best information that they have given the City is a 5 year time frame and their understanding is that once that is done they would pursue the easterly portion for development.

Pat Rossi, Tradition Development, explained that they would not be hauling material in on a daily basis and does not expect there to be a lot of noise other than an occasional dump truck coming in and a small bulldozer to spread things out. He stated that they are hopeful that they get through tonight's meeting with an approval and will then move on to prepare their preliminary plans and specifications within the next 1-2 months and be able to get started on the grading this summer and the streets by the fall. He noted that they have had a lot of success in the area and stated that they had done 10 phases in the Club West area and they feel this is a natural expansion of that development area and would like to begin this year.

Commissioner Urbanski asked if they foresaw using any of the soils, as they are grading, to go into the reclamation, or keep them all there for the development.

Mr. Rossi stated that they just received some of the initial earth balance work within the last few days and it looks like the site is a pretty close balance, so they do not intend to move anything offsite other than a few loads here and there.

Commissioner Rylee stated that it looks like this is a challenging site from a drainage standpoint and asked if they expected to be able to route the drainage in this project without it going into the reclamation area.

Mr. Rossi stated that they will have the temporary cul-de-sac and curb line and a boulevard on the downward side so there will be some depth there to contain the water. He stated that when they look at the stormwater design for the site they will have to take a look at the inlets and catch basins to ensure that they get enough of them in so they can handle the bigger storms.

Commissioner Olson stated that it will be interesting to see how the plan progresses and how the stormwater ponding as well as how they find the balance of tree preservation to the south. He stated that they will need to find a way to maximize what will go there while balancing it with the water and the trees.

Mr. Rossi stated that they will make every effort to save the trees but does not believe that have yet completed the tree survey on the site.

Commissioner Olson stated that they had provided the ghost lots for the extended phase and asked if the assumption was that there would not need to be any ponding with the 2nd phase.

Mr. Rossi noted that he was fairly certain that there would be ponding required with the next phase. He explained that they usually plan on about 10% of the area being devoted for stormwater ponding. He stated that they can show some general areas where ponding may appropriate.

Commissioner Olson asked if the homestead was a separate parcel that would be included in the next round.

Mr. Rossi stated that he believes it is all one parcel right now as an outlot from the Kusske Estates and thinks would need to be subdivided.

Community Development Director Kabat noted that he was looking at the County's GIS for the site and the house up against the road is its own parcel and the pole barn is on a separate parcel from the house. He stated that currently, everything today that Tradition is proposing to develop where it is ghost platted and the areas for preservation is all a single parcel.

Commissioner Olson stated that in order to connect to Creek Road they will have to get that other parcel.

Community Development Director Kabat noted that ownership is all the same but that is outside of what is being proposed.

Commissioner Olson stated that he wanted to ask because he wanted to make sure the Commission understood what the future will hold even if they do not yet know all the details.

Commissioner Rylee asked that the developer make sure that they are not creating slope stability problems in the future.

Motion by Commissioner Olson, second by Commissioner Urbanski, to recommend to City Council approval of the Kusske Estates Property Concept Plan for a 19-lot subdivision on 10.4 acres of land, subject to the following conditions:

1. Approvals shall be based on the following exhibits:
    a. Concept Site Plan Narrative (pgs 1-7), prepared by Patrick Wrase, Tradition Development, dated April 25, 2022
    b. Concept Plan, prepared by Alliant Engineering, dated April 25, 2022
    c. Existing Conditions, prepared by Alliant Engineering, dated April 25, 2022
    d. Site Features Map, prepared by Alliant Engineering, dated March 29, 2022
    e. Club West – Adjacent Property Layout, prepared by Alliant Engineering, dated March 28, 2022
2. Adherence with the City Engineer's Memo dated May 11, 2022
3. Provision of a 60 feet Right of Way width for all local streets.
4. Adherence to the City's Boulevard Tree Policy and local street section design.
5. Provision of sidewalks on both sides of all local streets.
6. Provision of a connection to the planned regional trail on Creek Road, to be addressed as preliminary plat submittal.

7. Adherence to the following building setbacks:
    a. Front (house): 23 feet
    b. Rear: 30 feet
    c. Side: 7.5 feet
    d. Side (corner): 20 feet
    e. Wooded Steep Slopes: 50 feet building setback and 30 feet no grade/no mow setback
    f. Wetlands: 30 feet
8. Prior to final plat approval, developer shall enter into an agreement with the City for the provision of necessary infrastructure and associated development costs.
9. Compliance with the City's anti-monotony and design requirements zoning ordinance (Section 9.28).
10. Provision that the wooded steep slopes and their applicable setbacks are delineated in the field and reviewed and approved by the Planning Department prior to preliminary plat submittal.
11. Preservation of the wooded steep slopes, including 30-foot buffer and a 50-foot setback from that wooded steep slope if present on site.
12. Provision of a wetland delineation report to be completed and provided at time of preliminary submittal.
13. Provision of a storm water management plan meeting City and Carver County WMO standards.
14. Provision that adequate maintenance accesses are provided for the stormwater ponds, and to be shown on the plans at preliminary plat submittal.
15. Provision for trail access points into the areas designated as open space to the north, south, and east.
16. Provision to further evaluate wooded steep slopes, bluffs, and tree preservation efforts in the proposed development area of the site as directed in the Wooded Steep Slopes, Bluffs, and Tree Preservation section of this report, and to be addressed at preliminary plat submittal.
17. Provision to provide examples of floor plans and elevations for the housing products that will be pursued.
18. Provision to work with staff to evaluate the existing Land Excavation/Reclamation Permit for the adjacent mining reclamation operation on the site, and evaluate needs to accommodate adequate future development on the site, and to be addressed at preliminary submittal.
19. Provision of screening between the proposed residential development and the adjacent mining reclamation operation on the site.

Motion carried 6-0-1 (Commissioner Gaare abstained).

Commissioner Gaare returned to the dais.

7.F. Recommend Denial of the Concept Plan for Outlot H Chaska Creek Center/Wabash Chaska Farms, LLC/PC #2022-31

Community Development Director Kabat presented the item to the Commission and noted that it will be presented to the City Council on May 16, 2022.

Commissioner Olson noted that he has served on the Planning Commission for 4 years and thinks this may be the first time he has seen a Concept Plan come with a recommendation of denial from staff. He asked why this was coming in front of the Commission.

Community Development Director Kabat stated that he cannot speak to the motivation of the applicant. He stated that staff has met with them on multiple occasions and the feedback from staff has been consistent and what was presented tonight to the Commission had been discussed with them on multiple occasions. He stated that it is very rare that this sort of recommendation comes before the Commission because usually when they indicate to the applicant that staff will not be recommending approval, they typically choose not to move forward. He stated that in this case, the applicant has elected to attempt to move forward and they will have to speak to their own rationale for that decision.

Dave Pokorney, Community Asset Development Group, explained that they have been working since the beginning with Wabash Capital on the development of this property. He stated that they are here seeking approval of a concept plan and noted that it is 100% consistent with the City's Comprehensive Plan because it guides this as business park. He read aloud specific language from the business park definition. He stated that Community Development Director Kabat said a number of times in his presentation that this site was guided for office and explained that it was not guided for office but for business park. He stated that in the world of development, legally for land use, being 'guided' is a key definition because it means that it is consistent with the Comprehensive Plan. He noted that the other key legal document that is out there is zoning and this property is zoned Open and within that it specifically says that this land will be rezoned to be consistent with the Comprehensive Plan, not the concept plan. He stated that Community Development Director Kabat had reviewed some of the history of the parcel starting with the concept plan, but noted that he was old enough that he remembers some other concept plans because this property came available for development about the time that the freeway was announced. He explained that the very first concept that came to the City consisted of Fairview Hospital and Cub Foods which didn't happen and the next concept plan came in 2007 with the Bioscience Zone which had a mixture of small industrial buildings and then the plan changed in 2010 and the City approved a plan for a college campus which also did not happen. He explained that in 2011 they came to the City in partnership with Opus with the concept plan mentioned by Community Development Director Kabat. He noted that there is nothing in City Zoning Code that says a concept plan has any legal entitlements. He stated that he found it interesting that the Commission recommended approval of the small office/warehouse on old 212. He stated that he read through the staff report of the concept plan when that was approved and did not see where it was consistent with the 2019 concept plan that was approved. He explained that it wasn't because they did the concept plan for that parcel and half of the site was office and the plans were changed, which they should have because there was not market for office/condos. He noted that Community Development Director Kabat used the term 'guided' 12 times during his presentation and reiterated that this parcel is not guided for office but is an office within the 2013 concept plan but is guided as business park. He gave a rebuttal to some of the points presented by Community Development Director Kabat and explained why he felt the Commission should recommend approval. He stated that as a land owner they have the right to develop based on the City's Comprehensive Plan and the City has the right to tell them they cannot do it, if it doesn't meet the Comprehensive Plan. He stated that if there is a conflict between zoning and the Comprehensive Plan, the Comprehensive Plan is the thing that prevails. He reminded the

Commission that concept plans are working documents that change over time, as the market changes. He stated that throughout the metro area, there is only one office space being built, in Minneapolis, so if the City thinks they are going to get corporate office on this parcel, he does not feel it will happen. He reiterated that this concept meets the City's requirements and noted that if approved he would not be surprised by the need for a list of conditions, but for the City to say outright that they cannot have a use that is permitted under the Comprehensive Plan, should not be done. He stated that he felt developers and cities need to be partners so their hope is that the Commission will recommend approval of the concept plan and noted that they have had quite a bit of interest in this site.

Commissioner Rylee asked if Mr. Pokorney had a particular timeline that he wanted for moving forward.

Mr. Pokorney stated that based on where things are today, he doesn't think that they will be able to build until next year and will probably allow Oppidan time to fill up their buildings before this one goes on the market.

Acting Chair Lacey asked about the final conversation Mr. Pokorney had with staff about the concept plan.

Mr. Pokorney stated that they just do not agree with staff's interpretation of this situation. He stated that to them, it is very clear that they have the right to follow the City's Comprehensive Plan. He stated that if they could sell this as a corporate headquarters even within a 5 year horizon, they would do it, but reiterated that they do not think it will ever happen.

Commissioner Rylee stated that in addition for it being unusual to have a recommendation from staff for denial, it is also unusual for the City Attorney to be present at the Planning Commission meeting and asked if there was anything that Mr. Pokorney has stated to the Commission that has not already been discussed with staff.

Mr. Pokorney stated that he had never discussed it with the City Attorney and noted that he assumed that would be the staff's job. He stated that he had not seen the statements from Community Development Director Kabat that he presented his rebuttal on tonight until they had sent out their staff report.

Christine Eid, 125 Main Street, Minneapolis, explained that she is an attorney for the property owner who had requested that she attend tonight's meeting and review the materials provided by staff. She stated that in reviewing the bullet pointed list explaining staff's rationale for denial of the concept plan, it appeared to her that the majority were factually erroneous. She stated that the Planning Commission has to make a decision based on the record which has to be supported by the law and fact. She stated that the Comprehensive Plan guides this parcel for business park and not for office. She stated that City staff is proposing that this small parcel be isolated for office use. She referenced the change in work locations and habits based on what has happened with the pandemic and noted that most people are not going into the office as much as they did in the past because many have transitioned into working from home. She stated that she does real estate, land use, and office leasing and explained that this is a crisis of epic proportions for office tower owners. She stated that no office buildings are being built right

now and probably would not be for the foreseeable future unless there is some other type of major world event. She explained that her concern for staff's recommendation to deny this concept plan is that it would be inconsistent with the Comprehensive Plan guidance and the Open district zoning. She noted that the zoning code clearly statements that market conditions are a factor that must be considered when determining what zoning district this will eventually be in. She stated that this is not a situation where a landowner is asking the City to change the zoning or the Comprehensive Plan. She stated that this use is permitted and noted that it is almost like staff is trying to isolate this one particular parcel for office use and no other use. She stated that the statements made by Mr. Pokorney responding to staffs bullet point list was their attempt at stating, one-by-one why they felt it was factually inaccurate or simply not lawful or untrue. She stated that at a minimum, they would be looking for a recommendation of approval of the concept plan, with conditions, in order to satisfy concerns such as those related to the visual aesthetic of the building.

Acting Chair Lacey stated that the Commission is getting two sides of a coin in this situation and asked for some clarity from staff including the City Attorney.

Community Development Director Kabat asked if there were specific areas that the Commission would like clarity.

Commissioner Gaare stated that her take away from the summary from staff is that the City is 'hoping for better' for this site but nothing that has been said tonight is saying to her that their proposal should not move forward. She stated that from what she can tell, this is a legitimate proposal that should probably move forward and should at least be looked at, but staff seems to be saying that this doesn't fit the mold.

Community Development Director Kabat stated that staff's analysis of business park guidance is looking at the area as a whole and trying to have a variety of uses. He stated that there is plenty of guidance for this location as it comes out of the other guiding documents that he noted that talk about how it relates to 212 and the interchange.

Commissioner Gaare asked if anyone else was lined up at the gate to buy these parcels to build and noted that Hy-Vee has just pulled out.

Community Development Director Kabat stated that Hy-Vee just made that announcement but had not put anything in front of the City yet. He stated that from a staff perspective they are looking at the long range and trying to achieve what has been stated through all the guiding documents on this location. He reiterated that from staff's standpoint, an industrial building that is very much like what Oppidan is already doing doesn't get to the diversity of uses that a business park is desiring to achieve and this location is set up to do that. He stated that he does not doubt that people are not currently looking for office space, but he also does not think it is fair to say that no other use can happen on this location or that they cannot look at another concept plan that achieves many of the goals that were stated and reiterated that from staff's analysis, what this proposes does not really get to that end.

Commissioner Gaare asked if the City was being realistic given the situation that has been laid out related to office buildings which she feels is a very legitimate argument.

Commissioner Rylee stated that it is also a sizeable burden because they are paying about $260,000 per year in taxes.

Commissioner Olson asked how this would compare with a situation like the Hazeltine apartments by Kohl's. He stated that it appears to be the same kind of situation where the landowner had tried to market it for what it was desired to be which in that case was retail, but nothing happened. He stated that they realized the market was hot for apartments and presented that to the City and staff recommended approval and noted that it had also required rezoning. He stated that he personally had voted no, but it did pass through the Commission as a concept plan and asked how this situation is different than that one.

Community Development Director Kabat stated that they talked about how that site relates to the primary corridor and how it is set back. He stated that the setup of that site is a bit different and that site also has been about 20 years since something has been developed there and has sat vacant. He stated that what they are seeing on this site is that the time has not really passed that they would recommend taking a different look at how the site should work. He stated that the City has made substantial investment in this site and it was not until recently that many of the things have gone in. He explained that staff's analysis of this is that it would be wise to take more time. He stated that he is not here to suggest that there is no other option for this site but they have had the conversation with the applicant that this is an industrial building that is very much like what Oppidan is proposing and the City would like to see more diversity in this location and something that would take better advantage of the proximity to 212.

Mr. Pokorney stated that he does not want to get into an argument but feels he needs to respond to that statement. He stated that Ms. Eid is really correct when she said what is really happening is that they are coming in wanting to do what the Comprehensive Plan says and the City staff is wanting to do something other than what it says. He stated that the apartment referenced by Commissioner Olson required a rezoning and an amendment to the Comprehensive Plan and reminded the Commission that they were not asking for either of those in this application. He gave examples of other uses that they could try to bring in that would require a Comprehensive Plan amendment and noted that they have to do what is in the Comprehensive Plan. He stated that this has been frustrating for them because the response from staff has been 'well, you can do something else'. He stated that if the City wanted to see something else, then they should have put it in their Comprehensive Plan. He gave a history of the investment and expense they have had on this property and noted that it has been a total of $6.6 million and stated that they cannot wait forever to develop it.

Commissioner Urbanski asked if the City Attorney had any thoughts on this item.

City Attorney Jacob Saufley stated that he has not worked with the applicant, but has worked with staff on this item. He stated that everything that he has heard from staff tonight is accurate.

Commissioner Olson confirmed that he has only interacted with what he had been told to him by staff and the documents that had been provided by the applicant, but there had been no direct communication with the applicant or their attorney.

City Attorney Jacob Saufley stated that was correct.

Acting Chair Lacey stated that he feels like the Commission is right in the middle of two opposing forces. He asked if there was a possibility for the City Attorney and the applicant's attorney to discuss this issue because everyone can have opinions on it, but there can only be one fact and he feels something is missing from the conversation tonight that he is not getting. He stated that he would like to see some more discussion because it is very difficult for the Commission to attempt to arbitrate and determine what is opinion and what is fact.

Commissioner Rylee agreed and stated that he did not think the Commission was qualified to arbitrate in this situation.

Acting Chair Lacey asked if the Commission could table this item to give the two attorneys time to discuss this situation and at least get 'closer to the pin' about what is fact and what is fiction.

City Attorney Jacob Saufley agreed that would be possible procedurally.

Ms. Eid stated that she has not heard the City Attorney or staff say what the law is and noted that she is just hearing that they want it to be something other than what has been presented. She stated that she is happy to have a conversation with the City Attorney, but she is not sure what the actual legal dispute is because they are saying that the Comprehensive Plan trumps the concept plan and both the zoning and the Comprehensive Plan permit this use. She stated that they feel they should be entitled to use the land for that purpose.

Acting Chair Lacey reiterated that the Commission is hearing two different things and he feels that they are not qualified to make a determination tonight on this issue. He stated that he thinks there needs to be another conversation between the two parties to decide on what the facts are and whether the current code allows for this use, or not.

Commissioner Urbanski stated that it would also give the City Attorney some time to review the proper documentation.

Commissioner Baswa stated that with the 12 bullet points staff presented, he would suggest that they also sit down and discuss what the facts are in those instances as well.

Ms. Eid stated that, to her, it seems like this matter is for the Planning Commission to decide whether this property can be used for something other than office. She stated the property owner has already spent a lot of money in attorney's fees and more meetings would involve more money to try to prove their lawful right to have something other than office with something that is permitted by the Comprehensive Plan.

Commissioner Urbanski stated that he did not disagree with Ms. Eid, but would like to get a legal opinion and have some time to research the information on his own. He stated that he hates to table things, but it is already 1:09 a.m. and admitted that everyone is probably not getting his best at the moment.

Commissioner Olson stated that the Commission is providing a recommendation to the City Council and he feels the recommendation may be that the Commission doesn't necessarily agree with City staff. He stated that the Commission does not make the decision, they just make recommendations.

There was discussion among the Commission about their opinion on whether to agree or disagree with staff's recommendation.

Motion by Commissioner Aasen, second by Commissioner Gaare to recommend City Council approval of the concept plan for a 115,000 square foot industrial building with loading docks and truck/trailer parking on Outlot H of the Chaska Creek Business Park.

Community Development Director Kabat stated that normally with a motion to recommend approval, there are conditions attached and reminded the Commission that the applicant had already acknowledged conditions may be necessary. He stated that because staff had recommended denial, they had not identified conditions for approval.

Motion failed.

Motion by Commissioner Aasen, second by Commissioner Gaare, to recommend City Council approval of the concept plan for 115,000 square foot industrial building with loadings docks and truck/trailer parking on Outlot H of the Chaska Creek Business Park, subject to conditions related to adequate screening, adequate parking, setbacks, preservation of wooded steep slopes, lighting plan, clarification on lawful uses, that there be no acquisition of City-owned land and green space, architectural compatibility with the rest of the business park, adequate stormwater and water management, that there be a report from the City Engineer, as discussed.

Motion carried.

8. Other Business

8.A. Receive Other Meeting Minutes
8.A.i. Receive the March 7, March 21, and April 4, 2022 City Council Meeting Minutes

Commissioner Urbanski

- Stated that he serves on the Community Center Task Force and they had their first meeting last month which he missed because he was ill, but will report on the next meeting which happens next week.

10. Adjourn

Motion by Commissioner Urbanski, second by Commissioner Olson, to adjourn the meeting at 1:22 am.
Motion carried.

REQUEST FOR ACTION
CHASKA PLANNING COMMISION
06/08/2022

Subject: **Cantissimo of Chaska - 32 Unit Assisted Living and Memory Care Building – Final Site & Building Plan and Final Plat**

Applicant: Anasazi Holdings, LLC

Location: Southeast corner of Hundertmark Road and Pioneer Trail

Case No.: P.C. No. 2022-34

Synopsis: The applicant is requesting approval of the final plan for a new 32-unit assisted living and memory care building

Prepared By: Elizabeth Hanson

Staff Recommendation: Recommend approval of the request

BACKGROUND

In May and July of 2000, the Pioneer Pointe development was fully approved. This development is directly south of the subject property (also known as the former Fred Molnau parcel) being looked at tonight. During the 2000 Pioneer Pointe approvals Fred Molnau's 2.7-acre property was referenced. Mr. Molnau decided to hold off on developing his parcel with Pioneer Pointe as his desires were to rezone the parcel to Commercial. At that time staff indicated that they are not in support of such rezoning and that the parcel should remain residential based on its size, configuration, and the City's Comprehensive Plan that guides it to be residential.

In March 2019, a different Concept Plan (Hazel View Senior Cooperative) was approved for a four-story, 37-unit senior Co-op building on this site. This plan never came in for subsequent approvals and has since been abandoned.

In April 2021, the Concept Plan for Cantissimo was approved. In April 2022, the Preliminary Site & Building Plan, Preliminary Plat, and Rezoning were approved.

Comparison to Former Hazel View Concept Plan

Use: Hazel View was a Senior Cooperative apartment building for people 62 years and older; the new use is proposing an assisted living and memory care facility.

Units: Hazel View proposed 37 total residential units; this new use is proposing 32 units with 38 residents.

Size: Hazel View proposed 4 stories and approximately 68,000 square feet in size. An underground parking lot was also proposed, which required more excavation to take place

on the site; this new use will be one story and approximately 22,000 square feet in size. No underground parking is proposed.

Parking: Hazel View proposed 50 total parking space (30 underground and 20 above ground); the new use proposes to have only an above ground parking lot with 25 spaces.

Tree Preservation: Hazel View proposed to save 25 of the 35 trees identified by staff for tree preservation; this new use is showing to preserve 28 of the 35 trees.

Changes Since Concept Plan

Alignment of Driveway Access: the alignment of the access into the site has moved southerly to align with Super Target's access to the west. This was advised by City and County staff. In order to achieve this alignment the site has to secure an easement from the Pioneer Pointe development to the south. Pioneer Pointe has provided approval of such easement. A designated southbound left-turn lane on Hundertmark Road will also be installed so that there is efficient traffic flow into the site.

Goals

CHASKA'S HIGH QUALITY OF LIFE IS ENHANCED – This project provides a low impact development on the 2.7-acre site by maintaining most of the site in its natural state providing open spaces and environmental preservation. This will allow the residents to enjoy these open spaces as well as the public with the adjusted walking trail along Pioneer Trail.

WELL PLANNED AND ORDERLY COMMUNITY DEVELOPMENT IS A PRIORITY – This new development will have a positive impact to the community in providing much needed senior housing options. The project sits adjacent to an existing townhome development and therefore consistent with the land use contemplated for the area. The infrastructure is already in place, thus allowing a cost-effective development for the City and its shareholders.

A SENSE OF COMMUNITY AND SMALL TOWN TALUES ARE MAINTAINED – This project will certainly provide an emphasis on family, neighborhood, and integration. It integrates along with townhome development to the South, as well as single family development to the West. The Chaska High School is near to the East and supports many public activities as well as a local meeting space for local church services. This will allow active participation in civic, religious, and other volunteer activities given its proximity to these amenities.

COMMITMENT TO EXCELLENCE – We believe that Cantissimo of Chaska will bolster this commitment. Our Development team has an excellent track record in providing a high-quality development and shares the same desire and vision of excellence that the city of Chaska possesses.

ZONING & COMPREHENSIVE PLAN
Currently, the site is zoned Planned Residential District (PRD-83). The Comprehensive Plan guides this parcel to be Medium Density Residential. The use that is being proposed is consistent with this guidance.

EXISTING CONDITIONS
The site is located on the southeast corner of Hundertmark Road and Pioneer Trail. It is a 2.7 acre triangular parcel with a scattering of significant trees. The site is currently vacant, and was a remnant of the Pioneer Pointe development. There are two bituminous public trails on the property; one on the northern portion of the site that runs parallel with Pioneer Trail, and one on the west side that runs parallel with Hundertmark Road. There also exists a drainage swale that runs north-south that splits the property in half.

CURRENT REQUEST
The applicant, Anasazi Holdings, LLC, is requesting Final Site & Building Plan and Final Plat approval for the construction of an assisted living and memory care building totaling 32 units (38 residents), 22,000 square feet in size, and one-story in height.

Adjacent properties
The new building's site is bounded on the south by the residential development Pioneer Pointe; the north by Pioneer Trail and a City trail; the east by Pioneer Trail; and the west by Hundertmark Road and a City trail.

Site Layout
The one-story building and parking are situated mainly on the western side of the site, due in part to the narrow shape of the site and the fact that the eastern end has very little buildable room. One access point is proposed on the west edge of the site to connect into Hundertmark Road. This ingress/egress will provide access to the surface parking lot. The parking lot is proposed on the southern portion of the site with the building just north of that. Two patio spaces are proposed on the north and east sides of the site.

The applicant has stated that several layouts were reviewed for the placement of the building and parking area. As the access from Hundertmark Road will be the only access and its location limited to the southern-most point of the property, it only made sense to place the parking lot on the south side with the building just north of that so that impervious surface was minimized to its greatest extent. The applicant also explored the potential in creating a two-story versus one-story building to lessen the building footprint on the site. However, the building was ultimately decided as a one-story for the following reasons according to the applicant:

1. It is considered desirable for the residents to live in a one-story building. We feel that residents will be more comfortable in a one-story where all the living is on one level rather than dealing with stairs and an elevator to get around their living environment.
2. A one-story building would be less obtrusive to the neighborhood to the South as well as to the intersection of Pioneer Trail and Hundertmark Road.

3. Instead of 32 units, we would need 44-48 units for a two-story building. This increase would be necessary because a two-story building will be more expensive to build and operate. This is a result of a code requirement that a two-story building be constructed of steel and concrete rather than wood, two sets of stairwells would be required to meet code, an elevator would be required to meet code and additional staff would be needed to cover two different floor levels.
4. The increase in units would require an increase in parking and traffic. The increase of 25 parking spaces to 32 means an increase in parking lot cover of approximately 2200 square feet. This increase in parking and traffic would be less desirable with the curved access point at the Southwest tip of the property.
5. While the bigger footprint will impact more trees, the actual loss of trees is less than the previous concept recommended for approval because of the bigger excavation area due to the proposed sub-garage of the previous project. Our concept is of slab on grade construction with minimal excavation. Please refer to Exhibit A on sheet A1.2.
6. The one-story with less units falls more in line with the Chaska Mission Statement: to be the 'Best Small Town in Minnesota'.

Overall, staff is generally favorable of the site layout. There are not many options for this site and the applicant has made decisions that seem to make the most sense. Providing more of a separation between the senior building and townhome buildings to the south seems most appropriate. The building will be the main focus on the intersection of Hundertmark Road and Pioneer Trail rather than the parking lot, which staff is favorable of. The building and layout will be less intrusive from a tree preservation and height perspective compared to the previously approved Concept Plan for Hazel View. It will be important, however, that there is an adequate buffer and screen between the parking lot and residential to the south.

Building Design

The building is a subtle u-shape in footprint and will be one-story tall with the front entrance facing the south towards the parking lot. The footprint is meant to provide interest and form to the site while allowing adequate sight lines near the intersection of Hundertmark Road and Pioneer Trail. The proposed building will be constructed with lap and shake siding, stone, glass, and have a pitched roof. The City of Chaska has certain building design and material requirements for multi-family residential buildings. A portion of it is stated as follows:

"Multi-family buildings shall use at least three (3) Class I materials and shall be composed of at least eighty (80) percent Class I materials, and no more than five (5) percent Class III materials

Building Materials	
Class I	Glass, stone, LP siding (shakes and board & batten) (100%)
Class II	Not provided
Class III	Not provided
CLASS I	80%; three different materials

REQUIRED	
CLASS III REQUIRED	Shall not exceed 5%
CLASS I PROVIDED	100%; three different materials
CLASS III PROVIDED	None

The applicant is showing that they are meeting the building requirements for Multi-Family. An item of note is the stone to be used. In order to be classified as a Class I material, the stone needs to be natural stone. The applicant will need to provide a physical sample of such for staff to make a full determination.

The applicant has provided a couple renderings/drawings of the building. The building's exterior appearance appears to show a well-balanced application of materials and depth. Given that this building will have high visibility on all of its sides, staff would advise that 360 degree architecture is achieved throughout the building.

Setbacks
The required setbacks for the site are as follows:

BUILDING SETBACKS	
Direction	**Setback**
Hundertmark Road	100 feet from centerline
Pioneer Trail	125 feet from centerline
South Property Line	20 feet
PARKING SETBACKS	
Direction	**Setback**
ROW	10 feet
South Property Line	10 feet

This setback variance request was also made during the Hazel View concept plan. Staff's analysis was generally the same as stated above. However, the proposed site plan for Cantissimo provides less impact compared to Hazel View's from a parking, height, and tree preservation perspective. The added 20 foot building setback on the south property line thus pushes the building closer to Pioneer Trail, so their request to deviate 25 feet into the Pioneer Trail setback appears to be an even trade-off.

<u>100' versus 125' Building Setback from Centerline of Pioneer Trail</u>
The applicant is asking for a reduction in the Pioneer Trail setback to be 100 feet from the centerline (25 foot variance) so that there is more usable space on the property. Their building is proposing to meet a 100' centerline setback. The property is tight to begin with because of its shape. In essence, half of the property is unbuildable with setbacks applied. Because this property is not a part of the Pioneer Pointe development there is an additional building setback from the south property line (20 feet), which in turn, creates less buildable room. The applicant is showing the building to be 28 feet

off the southern property line to make room for the parking lot. Staff's main concern with the reduction is the safety component and whether there will be adequate sight lines at the corner of Hundertmark Road and Pioneer Trail. Because of the placement and shape of the building, the site does not appear to pose a sight line concern.

A logical analysis is flipping the building and the parking lot so that the building can meet setbacks. The developer did explore this and has provided an analysis and exhibit in their submittal. In general, flipping the building and parking would create more impervious surface and more impacts on trees. The flip would also require the building to be reshaped to fit into the setbacks. 12 additional trees would be removed with this flipped layout; 9 of those are considered significant.

The driveway access requires to be placed southerly to align with Super Target's access on Hundertmark Road. With that in mind, the parking lot was oriented on the south of the site to be closer to the access point and have less of an impervious footprint. The building is oriented just north of that.

From staff's standpoint the irregular shape of the lot and the preservation of significant trees are grounds for a variation from the setback. The developer has chosen a layout that would appear to be the most logical and least impactful to justify the proposed variation.

Parking/Access/Circulation/Traffic

24 parking spaces are proposed as a part of this project. The following chart summarizes the overall parking demand on the site, based on the approximated sizes of the conceptual uses.

Uses	Approx. Size	Code Req.	Est. Parking Req.
Multi-Family Res. - Senior	32 dwelling units	1ps/2 dwelling units	16 parking spaces
		REQUIRED	**16 parking spaces**
		PROVIDED	**24 parking spaces**

According to this table the applicant is meeting the required amount of parking spaces needed for the proposed use of the site. The applicant has stated that they will have 12 employees total, and with the addition of guests coming into the facility the parking will be more than sufficient to serve the use. The residents of the facility will not be driving nor have cars. The parking lot is situated on the south side of the site facing Pioneer Pointe to the south. The applicant is showing a 6 foot privacy fence to provide separation between the parking lot/driveway access and Pioneer Pointe to the south.

The access into the site will be from one ingress/egress on Hundertmark Road. The access is shown to encroach onto Pioneer Pointe's property to the south so that the driveway can completely align with Super Target's access to the west. This was required by both City and County staff to provide proper traffic movement into and out of the site. Pioneer Pointe has approved an easement so that this alignment can occur. In addition, a

dedicated left-turn lane is also shown on Hundertmark Road to access the site. This turn lane is required in order for proper traffic movements to occur.

It should be noted that when the Pioneer Pointe development went in the three driveways on its northern edge were stubbed off for the purpose of connecting into the site to north of it (this subject site) when it decided to develop. However, this was done so that the same type of development (Townhomes) could extend onto this site. That is not the case with this proposal. With that said, the HOA of Pioneer Pointe have previously denied the ability to connect to their site as they do not want the additional traffic added to their development; this was stated during the Hazel View concept plan. An access point off of Pioneer Trail was also explored in previous submittals, however, Carver County has also denied the opportunity of gaining access on their road. Because of this the applicant has proposed to gain access off of Hundertmark Road.

A traffic analysis was completed for this site. The traffic analysis concluded that layout and use of the site will operate adequately.

Pedestrian Connections

The site currently has two public trails that transcend through the site; one on the west side that runs parallel with Hundertmark Road; one on the north side that runs parallel with Pioneer Trail. The applicant is showing in their plan connecting to both trail networks. The east side of the building shows a sidewalk connection from the building and parking lot that connects into the Pioneer Trail trail. The west side of the building also shows a sidewalk connection from the building and parking lot that connects into the Hundertmark Road trail.

It should be noted that the traffic study done for Hazel View recommends that a pedestrian connection at the site access should not be provided across Hundertmark Road to connect into Super Target's access. This is primarily due to the unsafe connection it creates; the oversaturation of connections across Hundertmark are the main reasons for unsafety. The study recommends that pedestrians use the existing pedestrian connection at the Pioneer Trail and Hundertmark Road intersection to connect into Super Target as opposed to creating another connection at the new access point into Cantissimo.

The applicant is showing the re-alignment of the public trail on the north side of the site. Currently the trail meanders through the site. This was done intentionally to help preserve trees on site. Staff has looked into this more and have determined that this is an acceptable re-alignment. There is currently a drainage issue in this area that will ultimately have to be fixed with this project. Because of this the trees will be disrupted regardless. Having the trail closer to the road, while still providing an adequate buffer, is the most ideal option from a City perspective. Additionally, the trees that are to be disrupted are mainly cottonwoods and box elders, which are not necessarily the most desirable in saving.

Tree Preservation & Landscaping

Tree Preservation will be important on this site. There are significant clusters of trees that exist. The applicant has provided a tree survey to indicate where these trees are located. A majority are located on the western half of the site where the building and

parking lot are going. Other clusters exist on the eastern half, which are proposed to be preserved. There is also a cluster of trees on the western-most side of the site that are generally proposed to be preserved as well. There is a cluster on the north side of the site that are shown to be effected by the proposed re-alignment of the public trail. As iterated before, this re-alignment is acceptable by staff given the trees to be effected are not considered desirable. Staff provided an analysis that highlighted specific areas to focus tree preservation attention on. That exhibit is shown below and circles 35 total trees in red. Staff advised to preserve the areas to the greatest extent possible on the west, north and east sides as shown in the exhibit in red.



The Cantissimo plan proposes to preserve 28 of the 35 trees. The layout of the building and parking lot were done intentionally to preserve as many trees as possible. From staff's perspective the developer has done an exceptional job in trying to preserve as many trees as possible.

The table below indicates the landscaping requirements for this site:

LANDSCAPING REQUIREMENTS & PROPOSED		
	Required	**Proposed**
Overstory Trees	70 caliper inches (26 trees)	trees; 37 existing and 36 new
Understory Trees	7	16
Shrubs	227	227

According to the table above the applicant is meeting the landscape requirements for the site.

Landscaping will be achieved around the site particularly on the south edge adjacent to the privacy fence and Pioneer Pointe. There are also a healthy grouping of plantings around the sidewalk and patio areas.

Usable Open Space

Multi-Family residential building sites are required to provide sufficient, usable open space, which is defined as defined as "a portion of a lot which provides the purpose for

outdoor recreation, scenic amenity, and/or shared exterior space for people to gather and use".

The applicant is currently showing two outdoor patio spaces; one on the north side and one on the east side. Most of the residents occupying this building cannot be outside on their own so the enclosed patio space on the north side will be a nice exterior setting that is safe and secure. The east patio will be another option for residents who do not require as much overwatch. Sidewalks will also connect these spaces to the outlying trail systems.

Lighting
Any lighting proposed for this plan should be fully screened and face downward. The applicant has shown in this preliminary submittal the photometrics and specs for all lighting proposed. 18 foot pole mounts will be used in the parking lot, and 12 foot wall mounts will be used on the building.

Utilities
Water and sewer are available to serve this site.

Stormwater
The applicant will work with the City to determine the drainage necessities for the site. The applicant is showing an underground biofiltration basin on the east side of the site.

Impact to Public Safety
Because this facility is a residential facility specializing in medical care, the City likes to get an understanding of the medical services provided internally (ie. lift assist and CPR) to see if there will be a major impact to the City's emergency services (Fire and Police). The applicant has provided an addendum in their narrative to elaborate on the services they provide. In sum, the City's Fire Department was generally comfortable with the services and policies they have in place to deal with emergency situations.

Final Plat
The site will be platted into one lot. There are no outlots.

Deadline for Agency Action
The City of Chaska received the complete application for this request on May 25, 2022. Pursuant to Minnesota State Statutes the City must act on this request by **Sunday, July 24, 2022 (60 days)**, unless the City provides the petitioner with written reasons for an additional 60-day review period. The additional review period would extend to Thursday, September 22, 2022. The City may with the petitioner's consent extend the review period beyond the Thursday, September 22, 2022 date. Lastly, if the City denies the petitioners request "… it must state in writing the reasons for the denial at the time it denies the request."

PLANNING COMMISSION ACTION REQUESTED:
Motion to recommend approval to the City Council of the Final Site & Building Plan and Final Plat for Cantissimo of Chaska, subject to the following conditions:

1. **Approvals shall be based on the following graphic exhibits:**
    a. **Narrative (pgs 1-7), submitted by TCO Design, dated April 19, 2022.**
    b. **Traffic Analysis Memo (pgs 1-12), submitted by Swing Traffic Solutions, dated November 4, 2021**
    c. **Existing Conditions Plan, submitted by Premier Land Surveying, dated May 23, 2018**
    d. **Boundary & Topographic Survey, submitted by Premier Land Surveying, dated May 17, 2017**
    e. **Previous Concept Excavation Area Plan (pg A1.4), submitted by Jim Mackey Architect, dated April 15, 2022**
    f. **Aerial Site Exhibit (pg A1.5), submitted by Jim Mackey Architect, dated April 15, 2022**
    g. **Context Map/Site Influences (pg A1.6), submitted by Jim Mackey Architect, dated April 15, 2022**
    h. **Site Plan (pg A1.1), submitted by Jim Mackey Architect, dated April 15, 2022**
    i. **Landscape Plan (pg A1.2), submitted by Jim Mackey Architect, dated April 15, 2022**
    j. **Lighting Plan (pg A1.3), submitted by Jim Mackey Architect, dated April 15, 2022**
    k. **100' vs 125' Setback Exhibit (pg A1.7), submitted by Jim Mackey Architect, dated April 15, 2022**
    l. **Garbage Truck Turning Movements, submitted by Demarc Land Surveying & Engineering, dated February 21, 2022**
    m. **Firetruck Turning Movements, submitted by Demarc Land Surveying & Engineering, dated March 22, 2022**
    n. **Sight Distance Exhibit, submitted by Demarc Land Surveying & Engineering, dated**
    o. **Final Plat, submitted by Demarc Land Surveying & Engineering**
    p. **Title Sheet (pg C1), submitted by Demarc Land Surveying & Engineering, dated April 21, 2022**
    q. **Details (pg C2-C6), submitted by Demarc Land Surveying & Engineering, dated April 21, 2022**
    r. **Existing Conditions & Removals (pg C7), submitted by Demarc Land Surveying & Engineering, dated April 21, 2022**
    s. **Site Plan (pg C8), submitted by Demarc Land Surveying & Engineering, dated April 21, 2022**
    t. **Grading & Drainage Plan (pg C9), submitted by Demarc Land Surveying & Engineering, dated April 21, 2022**
    u. **Utility Plan (pg C10), submitted by Demarc Land Surveying & Engineering, dated April 21, 2022**
    v. **Stormwater Pollution Prevention Plan (pg C11), submitted by Demarc Land Surveying & Engineering, dated April 21, 2022**
    w. **Stormwater Pollution Prevention Plan Notes, (pg C12), submitted by Demarc Land Surveying & Engineering, dated April 21, 2022**
    x. **Tree Preservation Survey, submitted by Demarc Land Surveying & Engineering, dated April 21, 2022**
    y. **Building Floor Plan (pg A2.1), submitted by Jim Mackey Architect, dated April 15, 2022**
    z. **Exterior Elevations (pg A3.1), submitted by Jim Mackey Architect, dated April 15, 2022**
    aa. **Renderings (pg A3.2), submitted by Jim Mackey Architect, dated April 15, 2022**

2. **Coordination with the City Engineer with regard to utilities, grading and drainage.**
3. **Installation of all site lighting at a 0 degree angle with the light source fully concealed at the property line.**
4. **Provision that all facades provide 360 degree architecture.**
5. **Utilization of natural stone as a Class I material.**
6. **No exterior storage will be permitted.**
7. **Provision of hydrant placement needs to accommodate City standards for hydrant placement and fire code standards.**
8. **Provision to submit Utility and Site Plan As-Builts prior to a certificate of occupancy being issued.**
9. **Any and all building signage shall be submitted separately, meet the sign ordinance section 15.32, and shall obtain sign permits prior to installation.**
10. **Provision of a storm water management plan meeting City and Carver County WMO standards.**
11. **Compliance with applicable zoning requirements, in particular Chapter 15.28 (Special Regulations).**
12. **Provision that all mechanical equipment will be fully screened from view.**
13. **Adherence with Carver County Public Work's memo dated March 29, 2021 and updated April 1, 2022.**
14. **Provision of a southbound left turn lane on Hundertmark Road consistent with Carver County and City standards.**
15. **Provision of an engineered plan of the southbound left turn lane on Hundertmark Road to be shown on the final plans.**
16. **Provision that a cross access easement be completed and executed on Pioneer Pointe's site prior to final plat recording.**

TCO Design

P.O. Box 41790, Plymouth, MN 55441
952-994-8276
todd@tcodesign.net

April 19, 2022

Assisted Living and Memory Care Facility
Corner of Pioneer Trail and Hundertmark Road (PID# 300280330)
Chaska, MN 55441

CANTISSIMO of CHASKA
CHASKA PIONEER SL, LLC
Anasazi Holdings, LLC - Paul Ablack, CEO
603 Lake Street East, Suite 206
Wayzata, MN 55391

Project Narrative:

Background

The proposed site is currently owned by Chaska Pioneer SL, LLC. Chaska Pioneer SL, LLC (Applicant) is proposing to construct a one story 32-unit (38 resident) care suite building on this site. This is a quiet, family-oriented facility that will fit nicely at this location. The site is on the corner of Pioneer Trail and Hundertmark Road. This central location close to a freeway and with great services within a mile makes this site a great location for an assisted living and memory care facility.

The maximum number of employees when the facility is full will be 12. This is the number of employee required by the State for this type of facility and care. This is also the number that a management company needs to provide the patients with meals, personal hygiene, housekeeping and any other resident needs. Building and exterior maintenance will be outsourced and maintained to the highest standards. There is plenty of on-site snow storage space. We are providing 24 off-street parking spaces that includes 1 ADA space. All deliveries will be at or near the main entrance of the building.

One Story vs. Two Story

There has been a discussion on whether the building should be one story or two story. The conclusion was one-story for several reasons.

1. It is considered desirable for the residents to live in a one-story building. We feel that residents will be more comfortable in a one-story where all the living is on one level rather than dealing with stairs and an elevator to get around their living environment.
2. A one-story building would be less obtrusive to the neighborhood to the South as well as to the intersection of Pioneer Trail and Hundertmark Road.
3. Instead of 32 units, we would need 44-48 units. This increase would be necessary because a two-story building will be more expensive to build and operate. This is a result of a code requirement that a three-story building be constructed of steel and concrete rather than wood, two sets of stairwells would be required to meet code, an elevator would be required to meet code and additional staff would be needed to cover three different floor levels.
4. The increase in units would require an increase in parking and traffic. The increase of 24 parking spaces to 32 means an increase in parking lot cover of approximately 2200 square feet. This increase in parking and traffic would be less desirable with the curved access point at the Southwest tip of the property.
5. While the bigger footprint will impact more trees, the actual loss of trees is less than the previous concept recommended for approval because of the bigger excavation area due to the proposed sub-garage of the previous project. Our concept is of slab on grade construction with minimal excavation. Please refer to Exhibit A on sheet A1.2.
6. The one-story with less units falls more in line with the Chaska Mission Statement: to be the ‘Best Small Town in Minnesota’.

Compliance with Chaska Mission Statement

Chaska Mission Statement: to be the 'Best Small Town in Minnesota'.

Not a 'throw-away' statement. With the primary mission of the City of Chaska being to enhance and maintain the high quality of life of its 'shareholders', the citizens of Chaska, this project truly integrates that mission.

This project provides a balanced residential component that any community needs for true full life-cycle housing. Assisted living facilities bring back a spirit of community and sociability with numerous common areas centrally located. The participatory nature of assisted living enhances the lives of its residents and contributes to healthier living. While residents can enjoy the privacy of their individual space, there are also many opportunities for social involvement.

Cantissimo of Chaska promises to be a great asset to the Best Small Town in Minnesota.

Chaska Core Strategy Reinforcement

Chaska's Mission Statement is further enhanced by 5 Core Strategies. Below are several ways we believe this project meets those strategies:

CHASKA'S HIGH QUALITY OF LIFE IS ENHANCED – This project provides a low impact development on the 2.7-acre site by maintaining most of the site in its natural state providing open spaces and environmental preservation. This will allow the residents to enjoy these open spaces as well as the public with the adjusted walking trail along Pioneer Trail.

WELL PLANNED AND ORDERLY COMMUNITY DEVELOPMENT IS A PRIORITY – This new development will have a positive impact to the community in providing much needed senior housing options. The project sits adjacent to an existing townhome development and therefore consistent with the land use contemplated for the area. The infrastructure is already in place, thus allowing a cost-effective development for the City and its shareholders.

A SENSE OF COMMUNITY AND SMALL TOWN TALUES ARE MAINTAINED – This project will certainly provide an emphasis on family, neighborhood, and integration. It integrates along with townhome development to the South, as well as single family development to the West. The Chaska High School is near to the East and supports many public activities as well as a local meeting space for local church services. This will allow active participation in civic, religious, and other volunteer activities given its proximity to these amenities.

COMMITMENT TO EXCELLENCE – We believe that Cantissimo of Chaska will bolster this commitment. Our Development team has an excellent track record in providing a high-quality development and shares the same desire and vision of excellence that the city of Chaska possesses.

Programming and Project Opportunity Development

The building fits well with the existing townhomes located in Pioneer Pointe, the closest neighbor. The use of cedar shake 'look' siding, horizontal siding, and stone are similar. We also are using a combination of gable and hip style roofs. Even though they are two story, our one story has similar mass since we have a bigger footprint.

The exterior patios are located close to the existing walking trail and relate to a sidewalk. Residents who are able will be connected to walking trails with this sidewalk.

The building is placed closest to Hundertmark Road to minimize the amount of driveway and parking lot needed to properly access the building.

The main entry, East entry, and West entry are visible from Hundertmark, Pioneer Trail, or the walking trail. There is transparence from all the resident's units. The only blocking of views is from the private patio accessed from the building common area.

The access to the site will be off Hundertmark Road. The traffic generated by this concept is considerably less than the previous concept recommended for approval. New traffic studies have been provided. We are working with Pioneer Pointe to obtain an easement to be more in line with the current Target East entrance.

Commercial Drafting and Home Design
Dedication to excellence

The current site has a natural grade and drainage to the Southeast. The concept will not alter this other than add an underground 'Stormtech' system to the East and underground filtration basin under the parking lot to keep stormwater run-off on our property. We will not increase stormwater to the South. A qualified civil Engineer has determined this through the application process.

A sign monument will be added near the driveway entrance from Hundertmark Road. The sign will identify the building and will meet Chaska city code.

Ownership Guiding Principles

Provide a quality and a compassionate living environment for individuals in need of assistance for day-to-day life.

Develop and maintain a facility and site to high standards that is an asset to the community and neighborhood.

Establish a business that fits the motto and standards of the city of Chaska.

Provide jobs and opportunities that will bring quality residents and services to the city of Chaska.

Encourage community involvement between the residents of Cantissimo of Chaska and the neighborhood.

Ownership Background

This dream of quality care for senior began in 2013 when one of the Owner's grandfather was diagnosed with Alzheimer's. Looking for a 'home' for his grandfather became the groundwork for stepping into their Fridley facility. Partnering with Jennifer Thorson, the executive Director of Fridley, they added an Anoka facility. They are currently looking to expand to Columbia Heights, Chaska, and Wayzata. The goal is to maintain the high standards of quality living for their residents and the cities in which they operate. Their goal is to expand at a speed that does not dimmish the quality of care and service.

The 'Senior Advisory.com' has awarded their Fridley facility the best of 2018 and 2019 awards. It is anticipated they will also receive their 2020 award. They have received 4.5 out of 5 state rating for residents and tours through Facebook, caring.com, senioradvisor.com. The Fridley 'home feel' facility has been operating for 4 years and has been so successful they added 18 more rooms to the existing 28 room facility.

This Ownership has shown success by providing a 'home feel' facility for the residents, family, and community they reside in. They will be bringing this same quality and best small-town facility to Chaska.

Request for a 100' setback from Pioneer Trail

The 2.7-acre lot has a very unusual flat triangle shape. With the standard 125' setback from Pioneer Trail there would only be about 32,000 square feet of usable area for building and parking. This would not be enough area to fit the size of building needed to support a development for senior housing. The additional 6,000 square feet of usable area gives the elbow space needed to properly fit a development on the site with appropriate tree placement, outdoor area, sidewalks, and proper parking lot turn around and maneuverability.

The building is angled to the West so that the West end of the building meets the 125' setback. This will maintain sight lines from Hundertmark Road and Pioneer Trail at the intersection.

Tree Preservation and Building Shape/Location

Several building shapes and locations have been considered for our use and this site. The location of the parking lot is ideal in preserving trees, placing the driveway as far South as possible on our site and efficiency of hardcover. We explored a straight building shape and a double angle shaped building. Both shapes were less efficient than the one angle shape proposed to the site and resulted in further compromise of the significant trees. The slab on grade construction allows minimal impact on existing trees. The shape, location and construction allow us to preserve 28 of the 35 trees indicated by Staff as significant. We will work with arborist through our process to ensure we reach the maximum possible preservation. The previously concept recommended for approval would only be able to preserve 25 of the 35 as shown in Exhibit A on sheet A1.2.

Commercial Drafting and Home Design
Dedication to Excellence

Traffic Consideration

We have provided two traffic studies showing minimal impact on Hundertmark Road traffic. These indicated that the new entrance with a short-left turn lane for South bound traffic into our proposed project will not impact the intersection of Hundertmark Road and Pioneer Trail. We have talked to the townhome association about an easement to be as close as possible to Target's East entrance. We have placed our driveway as far South as possible within the proposed easement.

Enclosed Patio Area

A generous enclosed patio area is provided for the residents of the building. Because a significant number of residents cannot be outside on their own, the enclosed patio will provide a nice exterior setting that is safe and secure. Being enclosed, it will be available to these residents more frequently than a patio that is not enclosed and safe. An open patio area is provided on the East side of the building for those residents who do not require as much overwatch.

Community Benefit

This facility will bring with it a good economic benefit from construction to operation. During construction the project will bring lots of workers who will patron local businesses for lunches, services and retail. Once in operation, the employees, professional visitors and guest visitors will also patron the local businesses for the entirety of its operation. The facility will provide approximately 40-50 good new jobs just on employees and dozens of increased business opportunities for medical professional visitors and visiting maintenance personnel.

There are several other advantages to a residential care facility for this community. It is important to the owner and operators that this facility is well maintained and run. All aspects of site and building maintenance will be kept to high standards. The families and groups associated with Comprehensive Care have high standards for this type of facility and for their residents. They are caring family members, medical professionals and business professionals. These types of facilities are quiet and low key. There will be no large and loud parties or gatherings. It will have 24 hour a day security.

Zoning and Land Use

Zoning

The current zoning for the site is PRD, Planned Residential Development. The proposed use for the building is assisted living/memory care. According to City Code permitted uses, Section 4, Sub-Section 4.2.3.1 Dwelling Units: Dwelling units in detached, semi-detached, attached, or multi-storied structures, or combinations thereof, and supporting public, recreational, and commercial uses to serve area residents. Assisted living and similar facilities are considered dwelling units.

Building

The proposed building will consist of one floor of assisted living and memory care units. The total floor area is approximately 23,000 square feet. There will be two wings with a central gathering space that includes a seating area, dining area, kitchenette, and salon. There will be a total of 32 care units/38 residents. Each unit will contain an entry, closet and ¾ bath with an ADA shower. There will be a central kitchen to provide nutrition for the residents.

The residents will get assisted living care and memory care. Specific services provided will be determined by the management company. Memory care patients are not allowed to wander outside of the facility without being accompanied by a care team member. The facility will operate under the Minnesota state Comprehensive Care License requirements.

The proposed building will use exterior materials consistent with current residential construction. It will utilize a nice balance of manufactured stone and 'LP SmartSide'. The siding will be varied by using a combination of textures and colors. Other architectural features such as decorative vents, columns and brackets will be used to add visual interest. The roof will be finished with 'shake look' architectural asphalt shingles.

One hundred percent (100%) of the proposed exterior materials are Class I materials as described in the city of Chaska's zoning ordinance, Section 9.11.4.1 Permitted Materials – Multi Family Residential.

Site

The overall site is approximately 2.71 acres. Setbacks for the property and proposed building are listed in the table below. The building location requires front yard setback variance from the City required front yard setback. The Developer is requesting a 100' setback from Pioneer Trail. The size and shape of this site creates a hardship not created by the Developer. This is caused by a small triangular shaped site that has two front streets.

	Building Setback		**Pavement Setback**	
	Required	Proposed	Required	Proposed
Front / Pioneer Trail from centerline of ROW	125 Feet	100 Feet	20 Feet	195 Feet
Front Yard from centerline of Hundertmark Road	100 Feet	100 Feet	10 Feet	100 Feet
Rear Yard South	20 Feet	33 Feet	10 Feet	10 Feet

Access and Parking

A new driveway will enter the site from Hundertmark Road as far South from Pioneer Trail as the property and new easement will allow. There will be a new 30-foot-wide curb cut to allow access for personal vehicles, delivery vans, and emergency vehicles. A 6-0 high fence will be installed to provide screening between the parking lot and the Pioneer Pointe townhomes to the South.

Parking has been provided to serve the proposed building with 24 parking stalls which exceeds City requirements. Based on City code, 1 parking space is required for every 2 dwelling units. A building with 32 dwelling units would be required to provide 16 parking spaces. One accessible stall is provided in accordance with 2020 MN Accessibility Code. The standard parking stalls are 9'x18' and the drive aisle is 26 feet in width.

Landscaping and Tree Preservation

A Landscape Plan and a Lighting Plan is provided to show new trees, new shrub screening and exterior lighting. There will be a 6-0 tall fence screening from the outdoor patio from Pioneer Trail and between the parking lot and townhomes to the South. The types (species) of new trees and minimum sizes are provided on the Landscaping Plan and the Lighting Plan. Tree preservation goals will be addressed.

Grading, Drainage, Utilities and Stormwater Treatment

Proposed preliminary site grades, drive aisles, parking areas, utilities and stormwater treatment is provided by our civil Engineer for the Final Plat Review application process. A preliminary underground 'Stormtech' system is shown on the current site plan. This will be underground and not visible from Pioneer Trail and the existing walking trail. Our civil engineer has addressed this with a stormwater management plan.

Commercial Drafting and Home Design
Dedication to excellence

Impact to Public Safety:

Lift Assistance

The proposed facility will incorporate the use of 'Hoyer' or equal lifts to assist residences who fall. An assessment will be made on site and have proper care staff on site 24/7 to assist with any fall or emergency, to assess the incident and be advised by the registered nurse as to when or if to call 911 for further assistance. The staff will only call 911 if a bone fracture is discovered or a head injury is sustained. Any other assistance will be performed by staff within the facility.

CPR (Cardiopulmonary Resuscitation)

The staff of this facility will not perform CPR on residents suffering from a heart attack or lack of breathing. 911 will be called in these instances, due to the fragile state the residents are in there appears to be a larger liability on the community if staff were to perform CPR vs waiting for 911 IF the resident is not DNR (Do Not Resuscitate Order). Attempted CPR can cause harm to its residents, including broken ribs, sternum fractures, and dislodged pacemaker electrodes. Additionally, attempted CPR on the elderly also has very low success rates.

D-N-R (Do Not Resuscitate Order)

All residents upon admission are required to bring forth a health care directive, POLST, and DNR/DNI. Most of the time our residents are admitted with a DNR/DNI in place, which is compatible to our no-CPR policy on site.

Project Narrative Addendum (Dated February 28, 2022):

100' Setback vs. 125' Setback

The 2.7-acre lot has a very unusual flat triangle shape. With the standard 125' setback from Pioneer Trail there would only be about 32,000 square feet of usable area for building and parking. This would not be enough area to fit the size of building needed to support a development for senior housing. The additional 6,000 square feet of usable area gives the elbow space needed to properly fit a development on the site with appropriate tree placement and outdoor area and sidewalks.

To maintain the 125' setback, the building and parking lot would have to be pressed more towards the South, West, and East. This would be needed to maximize the available space within the current setbacks. This would result in a loss of 8 trees, but a gain 1 tree for a net loss of 7 more trees. Five of those are considered significant by city staff. A '100' vs. 125' Setback Exhibit' Site Plan has been provided. It shows the eight trees that would have to get pressed out as the building would have to move into those areas to achieve the needed building footprint.

Access Easement Status

An access easement exhibit was provided to the Pioneer Pointe HOA (Homeowner's Association) on 11-4-21. Mary Myss shared the exhibit with the HOA. Mary responded with an e-mail on 11-18-21 indicating that the exhibit would be approved with a vote of 48-1. She provided a list of the Homeowners that participated. The e-mail and list have been provided.

We will ask Pioneer Pointe for a formal approval after we receive Preliminary Plat approval from the city of Chaska.

Landscape Planting Beds

The intent of final landscaping is to have a continuous planting bed around the building perimeter. The Landscape Plan only represents code minimums for trees and screening. Pictures has been provided of this Developer's previous project in Fridley and their approved Wayzata project that shows their intent.

Commercial Drafting and Home Design
Dedication to Excellence

Project Narrative Addendum (Dated March 21, 2022):

Place Building to South and Parking to the North:

An exhibit showing a concept of the building being placed to the South side of the property and the parking lot being placed to the North side of the property has been provided. It is on plan set sheet A1.8. Because the need to line up the driveway with Target, the driveway must start where we originally planned and run along the West side of the building. This causes an additional removal of 9 significant trees. Also, the needed reshaping of the building will cause the removal of 3 additional significant trees and 3 other trees. The total loss of trees with this move would be 9 significant trees and 3 others for a total of 12 more trees being removed.

Mechanical Locations and Screening:

The Site Plan and plan set sheet A1.1 shows the only exterior mechanical equipment being the air conditioning units. They are located on the North side of the building within the enclosed patio and additionally screened behind a 6-0 fence. The only other equipment will be in the interior of the building within a mechanical room shown on the floor plan.

Request to show a fire hydrant on the site plan:

We have added a fire hydrant just West of the trash enclosure as instructed by the fire department.

Fence Specification Request:

The stormwater pond has been changed to an underground basin. This mean there is no longer a need for a guard rail, so no specifications are needed or supplied at this time.

Lanewood Estates, LLC - Development Schedule
April 2022 – Final Plat Review Application to the City of Chaska
Summer 2022 – Building Permit Application
Fall 2022 – Begin Construction

Commercial Drafting and Home Design
Dedication to Excellence

ANASAZI HOLDINGS

PLAT FILE No.

C. R. DOC. No.

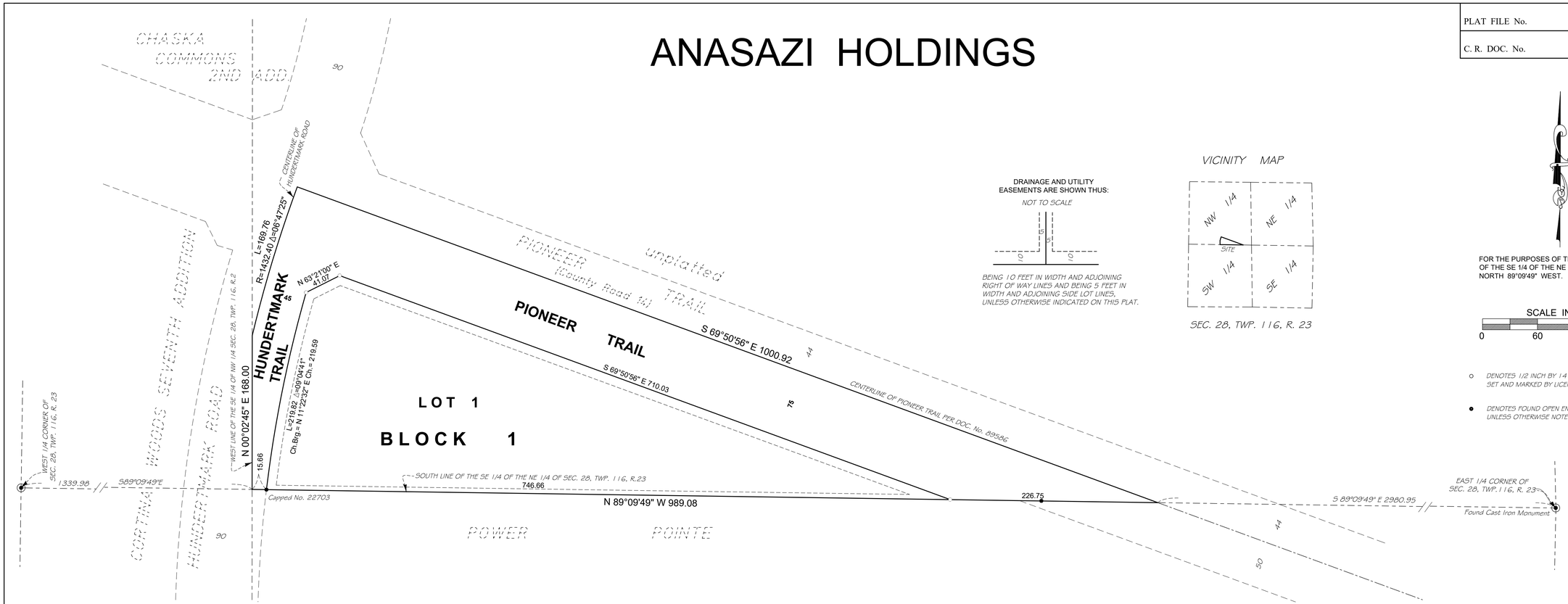

DRAINAGE AND UTILITY EASEMENTS ARE SHOWN THUS:

NOT TO SCALE

BEING 10 FEET IN WIDTH AND ADJOINING RIGHT OF WAY LINES AND BEING 5 FEET IN WIDTH AND ADJOINING SIDE LOT LINES, UNLESS OTHERWISE INDICATED ON THIS PLAT.

VICINITY MAP

SEC. 28, TWP. 116, R. 23

FOR THE PURPOSES OF THIS PLAT THE SOUTH LINE OF THE SE 1/4 OF THE NE 1/4 IS ASSUMED TO BEAR NORTH 89°09'49" WEST.

SCALE IN FEET

0 60 120 180

○ DENOTES 1/2 INCH BY 14 INCH IRON PIPE MONUMENT SET AND MARKED BY LICENSE NUMBER 24992.

● DENOTES FOUND OPEN END 1/2 INCH IRON PIPE MONUMENT UNLESS OTHERWISE NOTED.

KNOW ALL PERSONS BY THESE PRESENTS: That That Anasazi Holdings, LLC, a Minnesota limited liability company, owner of the following described property situate in the County of Carver, State of Minnesota, to wit:

That part of the Southeast Quarter of the Northwest Quarter Section 28, Township 116, Range 23 lying southerly of the centerline of Pioneer Trail (County Road 14) and lying easterly of Hundertmark Road.

Has caused the same to be surveyed and platted as ANASAZI HOLDINGS and does hereby dedicate to the public for public use forever the easements for utility and drainage purposes as shown on the plat.

In witness whereof said Anasazi Holdings, LLC, a Minnesota limited liability company, has caused these presents to be signed by its proper officer this _____ day of _____, 20____.

By _____
Paul Ablack

STATE OF MINNESOTA
COUNTY OF _____
The foregoing instrument was acknowledged before me this _____ day of _____, 20_____, by Paul Ablack its _____ of Anasazi Holdings, LLC, a Minnesota limited liability company on behalf of said company.

Signature of Notary _____ (Nortary's Printed Name)_____

Notary Public, _____ County, Minnesota My commission expires _____

I Gregory R. Prasch do hereby certify that this plat was prepared by me or under my direct supervision; that I am a duly Licensed Land Surveyor in the State of Minnesota; that this plat is a correct representation of the boundary survey; that all mathematical data and labels are correctly designated on this plat; that all monuments depicted on this plat have been, or will be correctly set within one year; that all water boundaries and wet lands as defined in Minnesota Statutes, Section 505.01, Subd. 3, as of the date of this certificate are shown and labeled on this plat; and all public ways are shown and labeled on this plat.

Dated this _____day of _____, 20 _____.

_____
Gregory R. Prasch, Land Surveyor
Minnesota License No. 24992

STATE OF MINNESOTA
COUNTY OF HENNEPIN
This instrument was acknowledged before me on this ___ day of _____, 20____ by Gregory R. Prasch. .

Signature of Notary _____ (Nortary's Printed Name)_____

Notary Public, _____ County, Minnesota My commission expires _____

City Council, City of Chaska, Minnesota
This plat of ANASAZI HOLDINGS was approved and accepted by the City Council of the City of Chanhassen, Minnesota, at a regular meeting thereof held this_____ day of _____, 20_____, and said plat is in compliance with the provisions of Minnesota Statutes, Section 505.03, Subdivision 2.

City Council, City of Chaska

By _____, Mayor By _____, Clerk

County Surveyor, Carver County, Minnesota
Pursuant to Chapter 395, Minnesota Laws of 1971 this plat has been approved this _____ day of _____, 20_____.

Brian E. Praske, County Surveyor By _____

Property and Financial Service Division, Carver County, Minnesota
I hereby certify that the taxes payable in _____ and prior years have been paid for land described on this plat. Dated this _____ day of _____, 20_____.

David Frischmon, Property and Financial Services Director By _____

County Recorder, Carver County, Minnesota
I hereby certify that the within plat of ANASAZI HOLDINGS was Filed this _____ day of_____, 20_____, at_____o'clock_____M. as Document No. _____

Kaaren Lewis, County Recorder By_____

DEMARC
LAND SURVEYING & ENGINEERING
7601 73rd Avenue North
Minneapolis, Minnesota 55428
(763) 560-3093
Demarcinc.com

F:\survey\28-116-23\chaska assisted living\01 Surveying - 89556\01 CAD\02 Certificates\07 Final Plat.dwg

SITE DEVELOPMENT PLANS

FOR

CANTISSIMO OF CHASKA

XXX HUNDERTMARK ROAD
CHASKA, MINNESOTA



CARVER COUNTY

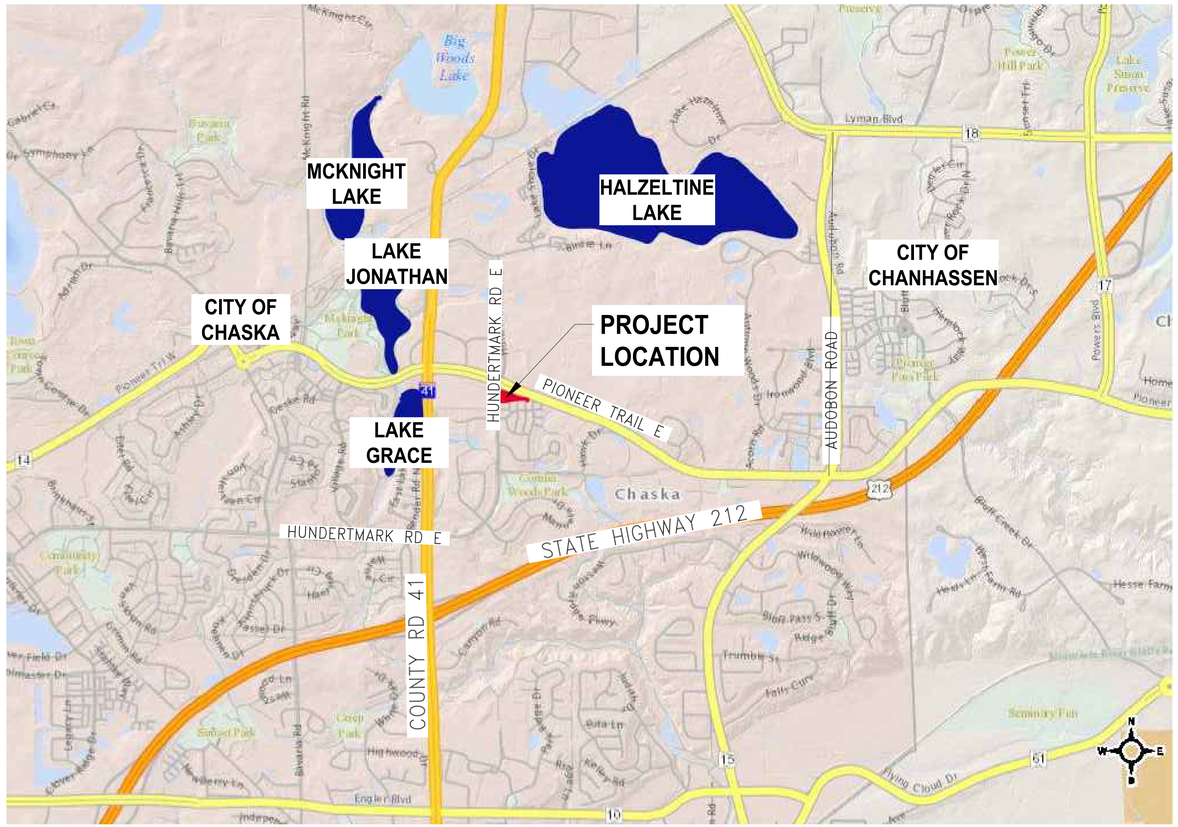
MCKNIGHT LAKE
HALZELTINE LAKE
LAKE JONATHAN
CITY OF CHASKA
CITY OF CHANHASSEN
PROJECT LOCATION
LAKE GRACE
HUNDERTMARK RD E
PIONEER TRAIL E
AUDUBON ROAD
HUNDERTMARK RD E
STATE HIGHWAY 212
COUNTY RD 41
Chaska
Lyman Blvd
Engler Blvd
Flying Cloud Dr
Powers Blvd
Bluff Creek Dr
Hesse Farm Rd
Trumble St
Falls Curve
Bluff Pass S
Ridge Bluff Dr
Seminary Fen
Big Woods Lake
Lake Simon Preserve
Pioneer Hill Park
Pioneer Park
Community Park
Creek Park
Sunset Park
Carver Woods Park
Bayberry Park
Highwood Dr
Camp Rd
Bavaria Rd
Audubon Rd
Powers Blvd
Pioneer Trl W
Lake Hazeltine Dr
Lake Grace Dr
Lake Jonathan Dr
Arboretum Blvd
Ironwood Blvd
Yellowood Way
Willowood Way
Jute Ln
Kerber Blvd
Ridge Rd
Bavaria Rd
Eden Rd
Lake Ridge Dr
Legacy Ln
Mulberry Ln
Sandhurst Dr
Stanford Ln
Village Rd
Kerber Rd Cir
Bridgeport Rd N
Bridgeport Rd S
Hunter Dr
Scott Rd
Hawk Dr
Blue Heron Dr
Arthur Dr
Myrtle Dr
Rose Ln
Rose Rd
Creek Rd
Lake Shore Dr
Lake Shore Ct
Symphony Ln
Gabriel Ct
McKnight Ct
McKnight Cir
McKnight Rd
Rolling Hills Dr
Brewer Hills Dr
Brewer Hills Trl
Rock N Rd
Rock N Ln
Rock N Cir
Blue Creek Trl
Blue Creek Ct
Blue Creek Dr
Powers Blvd
Pioneer Trl
Pioneer Ridge Rd
Pioneer Ridge Ct
Pioneer Ridge Cir
Pioneer Ridge Dr
Pioneer Ridge Trl
Pioneer Ridge Pkwy
Pioneer Ridge Ln

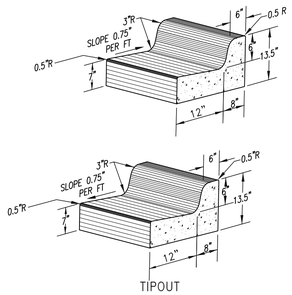

1 / C2 — B612 CURB AND GUTTER

NOT TO SCALE

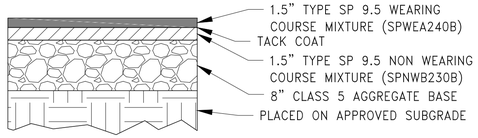

2 / C2 — BUTIMINOUS PAVEMENT

NOT TO SCALE

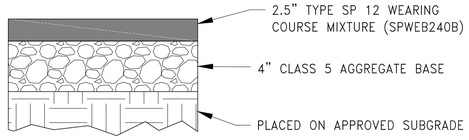

3 / C2 — BITUMINOUS PATH

NOT TO SCALE

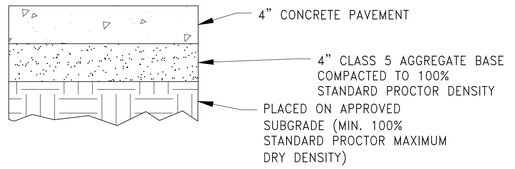

4 / C2 — CONCRETE SIDEWALK

NOT TO SCALE

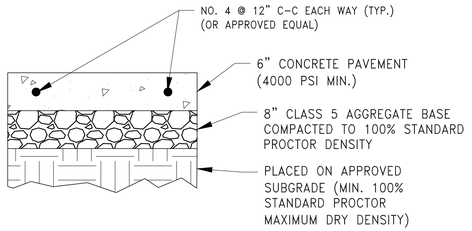

NOTE: CONCRETE COMPRESSIVE STRENGTH SHALL COMPLY WITH ASTM STANDARD C94. MINIMUM 28-DAY STRENGTH = 4,000 PSI

5 / C2 — CONCRETE DUMPSTER PAVEMENT

NOT TO SCALE

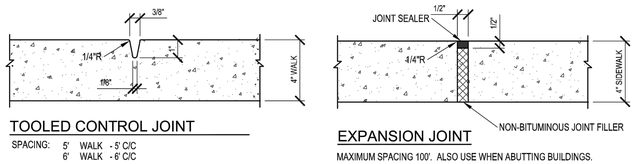

6 / C2 — CONCRETE JOINT DETAILS

NOT TO SCALE

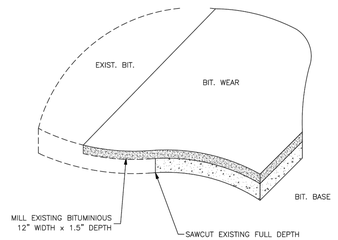

7 / C2 — MATCH EXISTING BITUMINOUS

NOT TO SCALE

NOTES:

1) N/A

2) FILL ALL VOID AREAS IN MODULAR BLOCK UNITS WITH COARSE FILTER AGGREGATE (MnDOT 3149.2H)

3) MODULAR BLOCK UNITS MUST HAVE INTERLOCKING LIP OR PIN CONNECTIONS

4) RETAINING WALL LOCATION SHOWN PLANS.

5) CONTRACTOR TO PROVIDE SHOP DRAWINGS FOR PROPOSED MODULAR BLOCK UNITS

6) OTHER RETAINING WALL TYPES MAY BE SUBMITTED FOR APPROVAL AND SHOP DRAWINGS PROVIDED PRIOR TO INSTALLING.

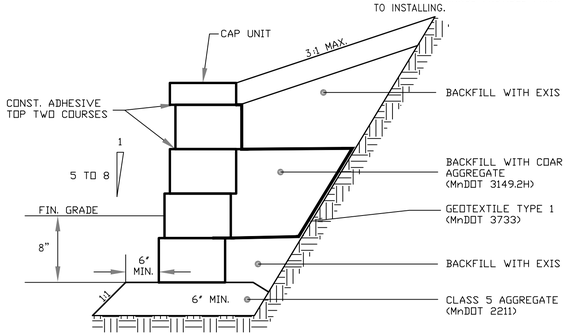

8 / C2 — RETAINING WALL

NOT TO SCALE

LEGEND

THESE LONGITUDINAL SLOPE RANGES SHALL BE THE STARTING POINT. IF SITE CONDITIONS WARRANT, LONGITUDINAL SLOPES UP TO 8.3% OR FLATTER ARE ALLOWED.

(S) INDICATES PEDESTRIAN RAMP - SLOPE SHALL BE BETWEEN 5.0% MINIMUM AND 8.3% MAXIMUM IN THE DIRECTION SHOWN AND THE CROSS SLOPE SHALL NOT EXCEED 2.0%.

(F) INDICATES PEDESTRIAN RAMP - SLOPE SHALL BE GREATER THAN 2.0% AND LESS THAN 5.0% IN THE DIRECTION SHOWN AND CROSS SLOPE SHALL NOT EXCEED 2.0%.

LANDING AREA - 4' X 4' MIN. (5' X 5' MIN. PREFERRED) DIMENSIONS AND MAX 2.0% SLOPE IN ALL DIRECTIONS. LANDING SHALL BE FULL WIDTH OF INCOMING PARS.

X'' CURB HEIGHT

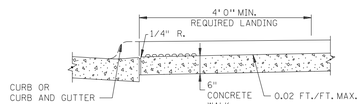

SECTION C-C
PARALLEL/DEPRESSED CORNER

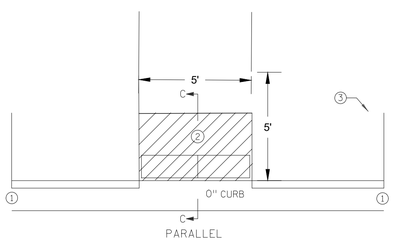

NOTES:

LANDINGS SHALL BE LOCATED AT WHERE THE PEDESTRIAN ACCESS ROUTE (PAR) CHANGES DIRECTION, AT THE TOP OF RAMPS THAT HAVE RUNNING SLOPES GREATER THAN 5.0%, AND IF THE APPROACHING WALK IS INVERSE GRADE GREATER THAN 2%.

INITIAL CURB RAMP LANDINGS SHALL BE CONSTRUCTED WITHIN 15' FROM THE BACK OF CURB, WITH 6' FROM THE BACK OF CURB BEING THE PREFERRED DISTANCE, ONLY APPLICABLE WHEN THE INITIAL RAMP RUNNING SLOPE IS OVER 5.0%.

SECONDARY CURB RAMP LANDINGS ARE REQUIRED FOR EVERY 30" OF VERTICAL RISE WHEN THE LONGITUDINAL RUNNING SLOPE IS GREATER THAN 5.0%.

CONTRACTION JOINTS SHALL BE CONSTRUCTED ALONG ALL GRADE BREAKS WITHIN THE PAR. 1/4" DEEP VISUAL JOINTS SHALL BE USED AT THE TOPS OF CONCRETE FLARES ADJACENT TO WALKABLE SURFACES

ALL GRADE BREAKS WITHIN THE PAR SHALL BE PERPENDICULAR TO THE PATH OF TRAVEL. THUS BOTH SIDES OF A SLOPED WALKING SURFACE MUST BE EQUAL LENGTH. (EXCEPT AS STATED IN (6) BELOW.

TO ENSURE INITIAL RAMPS AND INITIAL LANDINGS ARE PROPERLY CONSTRUCTED, LANDINGS SHALL BE CAST SEPARATELY. FOLLOW SIDEWALK REINFORCEMENT DETAILS ON SHEET 6 AND THE ADA SPECIAL PROVISIONS - PROSECUTION OF WORK (ADA).

TOP OF CURB SHALL MATCH PROPOSED ADJACENT WALK GRADE.

WHEN THE BOULEVARD IS 4' WIDE OR LESS, THE TOP OF CURB TAPER SHALL MATCH THE RAMP SLOPES TO REDUCE NEGATIVE BOULEVARD SLOPES FROM THE TOP BACK OF CURB TO THE PAR.

ALL RAMP TYPES SHOULD HAVE A MINIMUM 3' LONG RAMP LENGTH.

4' MINIMUM WIDTH OF DETECTABLE WARNING IS REQUIRED FOR ALL RAMPS. DETECTABLE WARNINGS SHALL CONTINUOUSLY EXTEND FOR A MIN. OF 24" IN THE PATH OF TRAVEL. DETECTABLE WARNING TO COVER ENTIRE WIDTH OF SHARED-USE PATHS AND THE ENTIRE PAR WIDTH OF THE WALK. DETECTABLE WARNING SHOULD BE 6" LESS THAN THE PAR/TRAIL WIDTH. ARC LENGTH OF RADIAL DETECTABLE WARNINGS SHOULD NOT BE GREATER THAN 20 FEET.

RECTANGULAR DETECTABLE WARNINGS SHALL BE SETBACK 3" FROM THE BACK OF CURB. RADIAL DETECTABLE WARNINGS SHALL BE SETBACK 3" MINIMUM TO 6" MAXIMUM FROM THE BACK OF CURB.

(1) MATCH FULL HEIGHT CURB.

(2) DETECTABLE WARNINGS MAY BE PART OF THE 4' X 4' MIN. LANDING AREA IF IT IS NOT FEASIBLE TO CONSTRUCT THE LANDING OUTSIDE OF THE DETECTABLE WARNING AREA.

(3) WHEN ADJACENT TO GRASS, GRADING SHALL ALWAYS BE USED WHEN FEASIBLE. V CURB, IF USED, SHALL BE PLACED OUTSIDE THE SIDEWALK LIMITS WHEN RIGHT OF WAY ALLOWS. WHEN ADJACENT TO PARKING LOTS, CONCRETE OR BITUMINOUS TAPERS SHOULD BE USED OVER V CURB TO REDUCE TRIPPING HAZARDS AND FACILITATE SNOW & ICE REMOVAL.

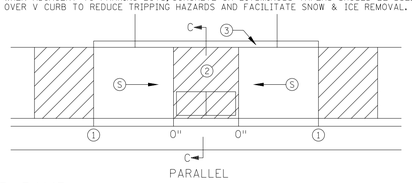

9 / C2 — PEDESTRIAN CURB RAMP

NOT TO SCALE

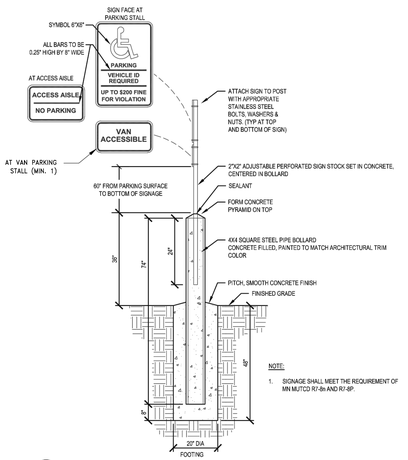

10 / C2 — ADA SIGN DETAIL

NOT TO SCALE

DESIGNED BY: JAP DRAWN BY: ABL CHECKED BY: GRP	I HEREBY CERTIFY THAT THIS PLAN, SPECIFICATION, OR REPORT WAS PREPARED BY ME OR UNDER MY DIRECT SUPERVISION AND THAT I AM A DULY LICENSED PROFESSIONAL ENGINEER UNDER THE LAWS OF THE STATE OF MINNESOTA. JEFFREY A. PRASCH, P.E. DATE: 12.07.21 LIC. NO.: 52706		REVISIONS	DEMARC LAND SURVEYING & ENGINEERING 7601 73RD AVENUE N, BROOKLYN PARK, MN 55428 PHONE: 763.560.3093 FAX: 763.560.3522 www.Demarcinc.com	TCO DESIGN P.O. BOX 41790 PLYMOUTH, MINNESOTA 55441 763.424.3676	CANTISSIMO OF CHASKA XXX HUNDERTMARK ROAD CHASKA, MINNESOTA	DETAILS	PROJECT: 89556 SHEET NO. C2 OF C12

J:\survey\28-116-23\chaska assisted living\02 engineering - 89556\01 CAD\05 Sheet Files\02 Details.dwg

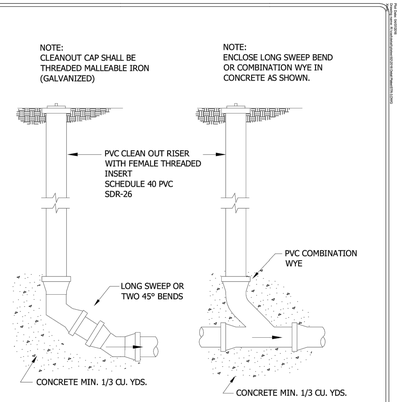

Stantec
2335 Highway 36 W
St. Paul, MN 55113
www.stantec.com

SERVICE LINE CLEANOUTS

CHASKA, MINNESOTA

LAST REVISION: MARCH 2001

PLATE NO. SER-4

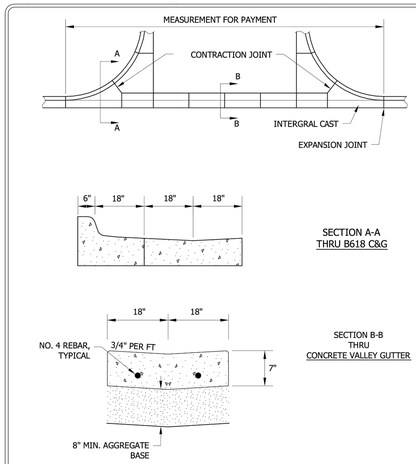

Stantec
2335 Highway 36 W
St. Paul, MN 55113
www.stantec.com

COMMERCIAL DRIVEWAY

CHASKA, MINNESOTA

LAST REVISION: APRIL 2016

PLATE NO. STR-3

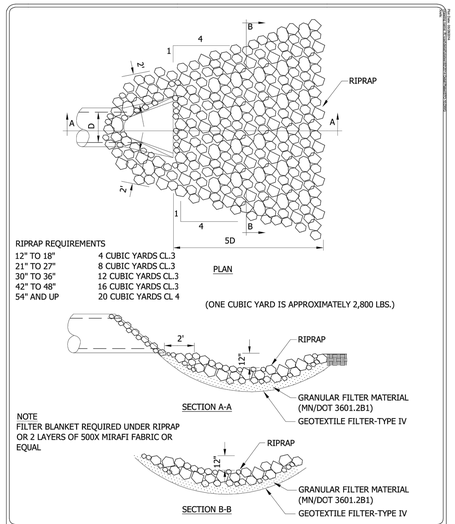

Stantec
2335 Highway 36 W
St. Paul, MN 55113
www.stantec.com

RIPRAP AT OUTLETS

CHASKA, MINNESOTA

LAST REVISION: APRIL 2004

PLATE NO. STO-11

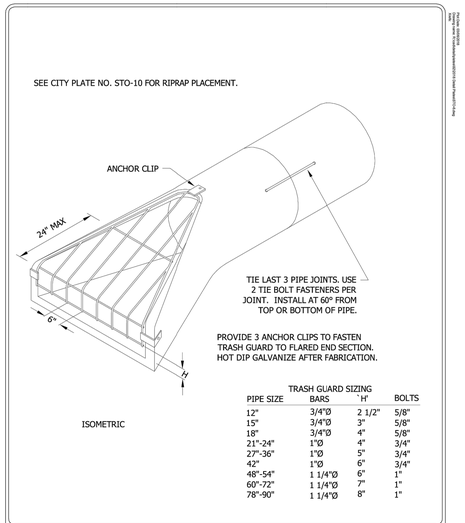

TRASH GUARD SIZING

PIPE SIZE	BARS	'H'	BOLTS
12"	3/4"Ø	2 1/2"	5/8"
15"	3/4"Ø	3"	5/8"
18"	3/4"Ø	4"	5/8"
21"-24"	1"Ø	4"	3/4"
27"-36"	1"Ø	5"	3/4"
42"	1"Ø	6"	3/4"
48"-54"	1 1/4"Ø	6"	1"
60"-72"	1 1/4"Ø	7"	1"
78"-90"	1 1/4"Ø	8"	1"

Stantec
2335 Highway 36 W
St. Paul, MN 55113
www.stantec.com

FLARED END SECTION AND TRASH GUARD

CHASKA, MINNESOTA

LAST REVISION: FEB. 1995

PLATE NO. STO-10

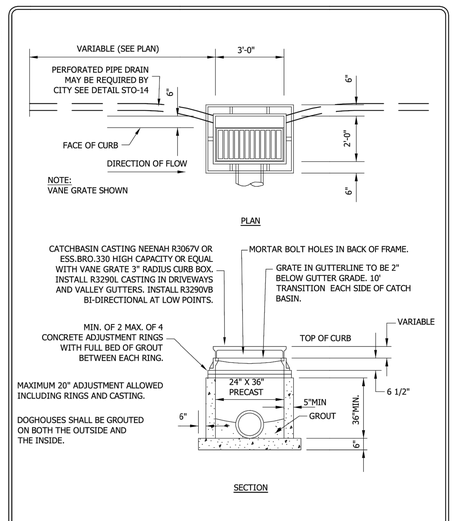

Stantec
2335 Highway 36 W
St. Paul, MN 55113
www.stantec.com

TYPE II CATCHBASIN

CHASKA, MINNESOTA

LAST REVISION: MARCH 2018

PLATE NO. STO-6

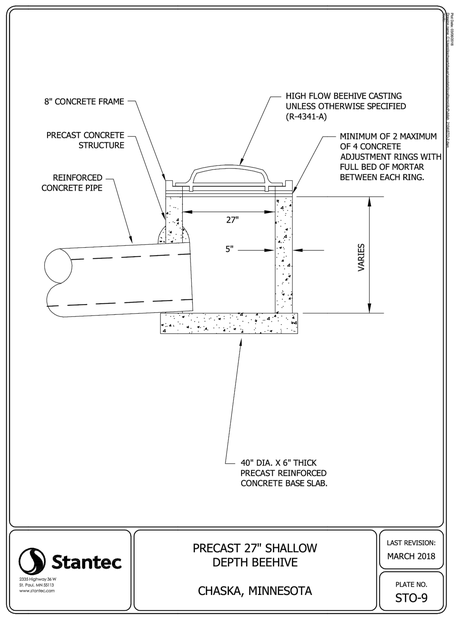

Stantec
2335 Highway 36 W
St. Paul, MN 55113
www.stantec.com

PRECAST 27" SHALLOW DEPTH BEEHIVE

CHASKA, MINNESOTA

LAST REVISION: MARCH 2018

PLATE NO. STO-9

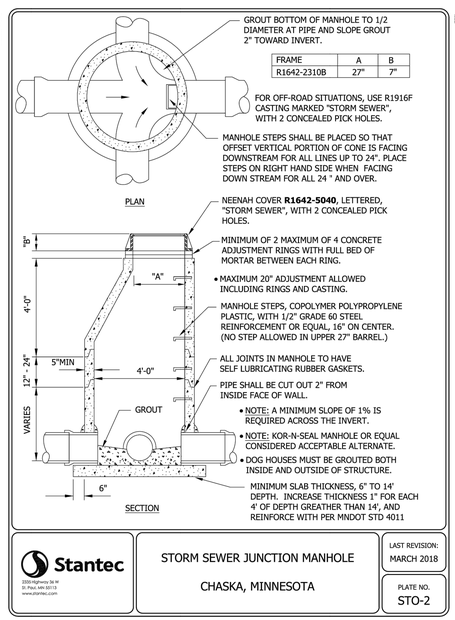

Stantec
2335 Highway 36 W
St. Paul, MN 55113
www.stantec.com

STORM SEWER JUNCTION MANHOLE

CHASKA, MINNESOTA

LAST REVISION: MARCH 2018

PLATE NO. STO-2

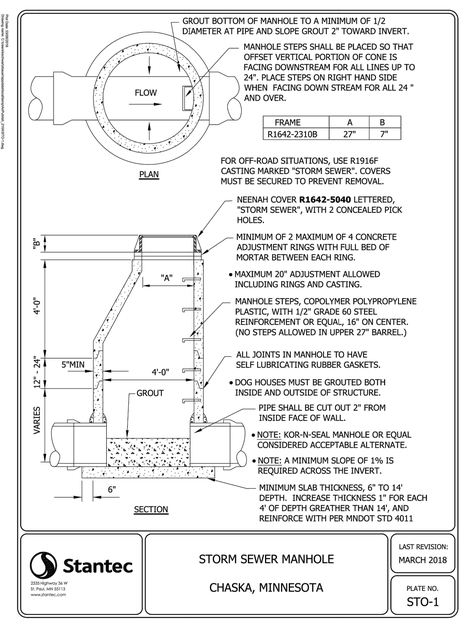

Stantec
2335 Highway 36 W
St. Paul, MN 55113
www.stantec.com

STORM SEWER MANHOLE

CHASKA, MINNESOTA

LAST REVISION: MARCH 2018

PLATE NO. STO-1

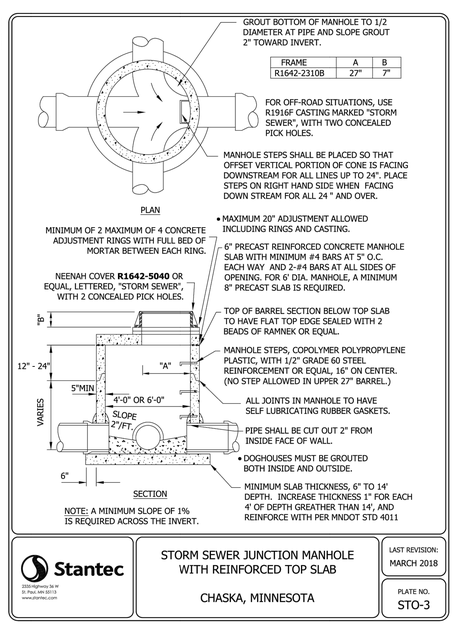

Stantec
2335 Highway 36 W
St. Paul, MN 55113
www.stantec.com

STORM SEWER JUNCTION MANHOLE WITH REINFORCED TOP SLAB

CHASKA, MINNESOTA

LAST REVISION: MARCH 2018

PLATE NO. STO-3

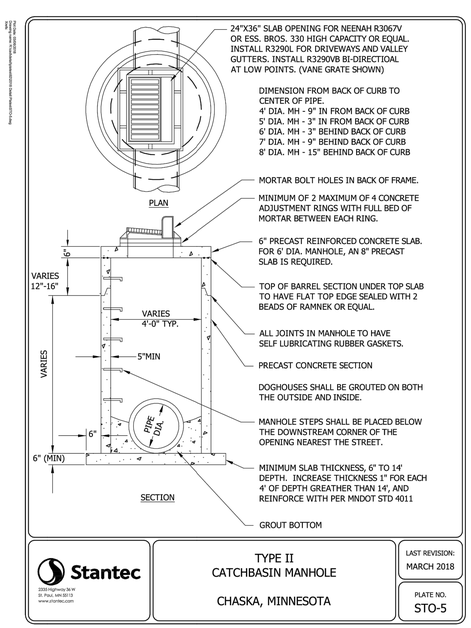

Stantec
2335 Highway 36 W
St. Paul, MN 55113
www.stantec.com

TYPE II CATCHBASIN MANHOLE

CHASKA, MINNESOTA

LAST REVISION: MARCH 2018

PLATE NO. STO-5

DESIGNED BY: JAP
DRAWN BY: ABL
CHECKED BY: GRP

I HEREBY CERTIFY THAT THIS PLAN, SPECIFICATION, OR REPORT WAS PREPARED BY ME OR UNDER MY DIRECT SUPERVISION AND THAT I AM A DULY LICENSED PROFESSIONAL ENGINEER UNDER THE LAWS OF THE STATE OF MINNESOTA.

JEFFREY A. PRASCH, P.E.

DATE: 12.07.21 LIC. NO.: 52706

REVISIONS

DEMARC
LAND SURVEYING & ENGINEERING
7601 73RD AVENUE N, BROOKLYN PARK, MN 55428
PHONE: 763.560.3093 FAX: 763.560.3522
www.Demarcinc.com

TCO DESIGN
P.O. BOX 41790
PLYMOUTH, MINNESOTA 55441
763.424.3676

CANTISSIMO OF CHASKA
XXX HUNDERTMARK ROAD
CHASKA, MINNESOTA

DETAILS

PROJECT: 89556

SHEET NO. C3 OF C12

I:\survey\28-116-23\chasko assisted living\02 engineering - 89556\01 CAD\05 Sheet Files\02 Details.dwg

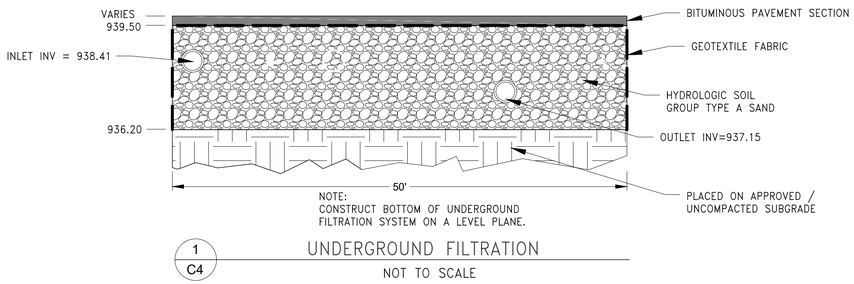

NOTE:
CONSTRUCT BOTTOM OF UNDERGROUND FILTRATION SYSTEM ON A LEVEL PLANE.

1 / C4 UNDERGROUND FILTRATION

NOT TO SCALE

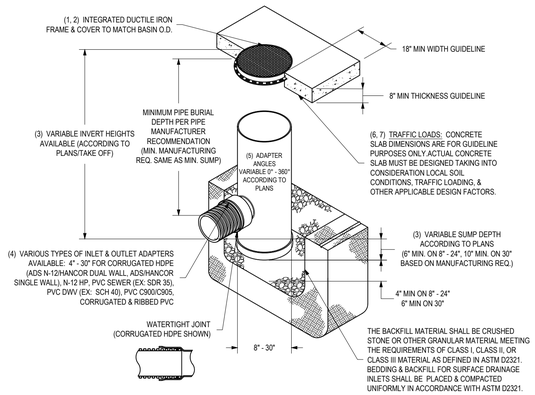

1 - 8" - 30" SOLID COVERS SHALL BE DUCTILE IRON PER ASTM A536 GRADE 70-50-05.
2 - 12" - 30" FRAMES SHALL BE DUCTILE IRON PER ASTM A536 GRADE 70-50-05. 8" & 10" SOLID COVERS FIT DIRECTLY ONTO DRAIN BASINS WITH THE USE OF A PVC BODY TOP. SEE DRAWING NO. 7001-110-045.
3 - DRAIN BASIN TO BE CUSTOM MANUFACTURED ACCORDING TO PLAN DETAILS. RISERS ARE NEEDED FOR BASINS OVER 84" DUE TO SHIPPING RESTRICTIONS. SEE DRAWING NO. 7001-110-065.
4 - DRAINAGE CONNECTION STUB JOINT TIGHTNESS SHALL CONFORM TO ASTM D3212 FOR CORRUGATED HDPE (ADS N-12/HANCOR DUAL WALL), N-12 HP, & PVC SEWER (4" - 24").
5 - ADAPTERS CAN BE MOUNTED ON ANY ANGLE 0° TO 360°. TO DETERMINE MINIMUM ANGLE BETWEEN ADAPTERS SEE DRAWING NO. 7001-110-012.
6 - 12" - 30" SOLID COVERS SHALL MEET H-20 LOAD RATING.
7 - 8" & 10" SOLID COVERS ARE RATED FOR LIGHT DUTY APPLICATIONS ONLY; NO CONCRETE COLLAR NEEDED FOR LIGHT DUTY RATING.

1 NYLOPLAST DRAIN BASIN WITH SOLID COVER

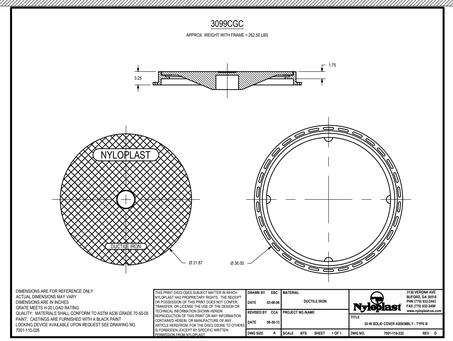

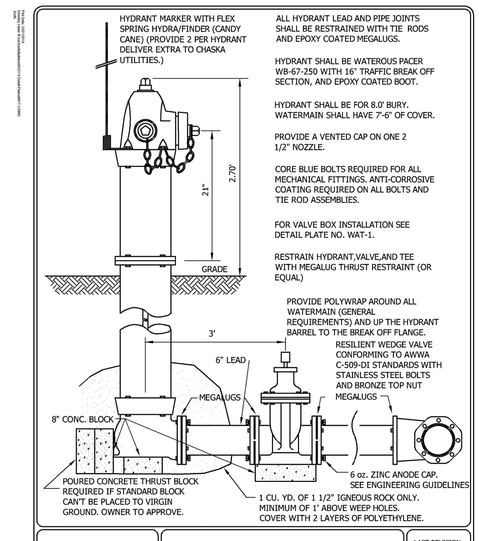

Stantec
733 Marquette Ave Suite 1000
Minneapolis, MN 55402
www.stantec.com

WATEROUS PACER HYDRANT AND VALVE INSTALLATION

CHASKA, MINNESOTA

LAST REVISION: MARCH 2019

PLATE NO. WAT-2

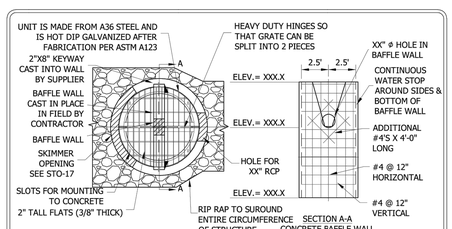

Stantec
2550 Highway 36 W
St. Paul, MN 55113
www.stantec.com

SKIMMER STRUCTURE WITH CAST IN FIELD CONCRETE BAFFLE WALL

CHASKA, MINNESOTA

LAST REVISION: MARCH 2018

PLATE NO. STO-18

PRECAST INVERT WITH A MINIMUM 1% THROUGH SLOPE REQUIRED.
PRECAST INVERT MUST BE 1/2 DIAMETER OF THE PIPE AND BENCHES SLOPED 2" TOWARD THE INVERT.

FRAME	A	B
R1642-2310B	27"	7"
R1755G	27"	7"

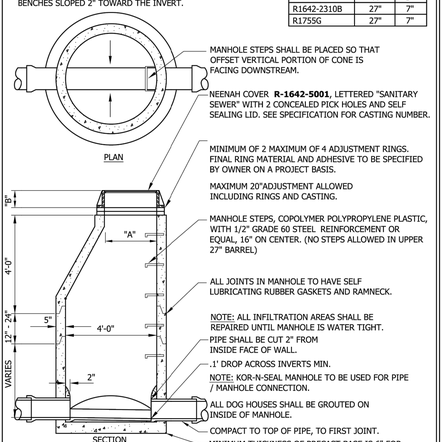

Stantec
2550 Highway 36 W
St. Paul, MN 55113
www.stantec.com

SANITARY SEWER MANHOLE

CHASKA, MINNESOTA

LAST REVISION: MARCH 2018

PLATE NO. SAN-1

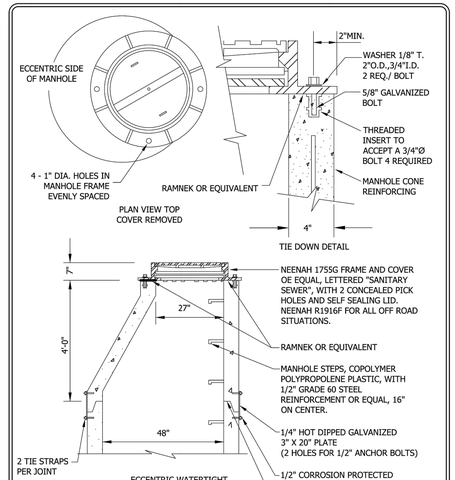

Stantec
2550 Highway 36 W
St. Paul, MN 55113
www.stantec.com

WATERTIGHT CASTING FOR SANITARY SEWER MANHOLE

CHASKA, MINNESOTA

LAST REVISION: MARCH 2018

PLATE NO. SAN-5

NOTES: CORE BLUE BOLTS REQUIRED FOR ALL MECHANICAL FITTINGS. ANTI-CORROSIVE COATING REQUIRED ON ALL BOLTS AND TIE ROD ASSEMBLIES.

- PROVIDE POLYWRAP AROUND ALL WATERMAIN
- 7.5' MINIMUM COVER REQUIRED OVER TOP OF WATER MAIN.
- RESTRAIN TEE AND VALVE WITH EPOXY COATED MEGALUG (OR EQUAL) THRUST RESTRAINTS.

DROP LID	TYLER	NO. 6860	
	MUELLER	NO. H-10361	
	BIBBY-STE-CROIX	NO. B-5160	
TOP	TYLER	NO. 6860	26"
	MUELLER	NO. H-10361	26"
	BIBBY-STE-CROIX	NO. VB502	27"
EXTENSION	TYLER	NO. 58	14"
		NO. 59	18"
		NO. 60	24"
	MUELLER	NO. 58	14"
		NO. 59	20"
	BIBBY-STE-CROIX VB520 VB521 VB522 VB523	NO. 57	9"
		NO. 58	14"
		NO. 59	20"
		NO. 60	26"
BOTTOM	TYLER	NO. 6860	65"
	MUELLER	NO. H-10361	65"
	BIBBY-STE-CROIX	NO. VB516	60"

GRADE
3'
BASE
MEGALUGS
MEGALUGS
8" CONC. BLOCK

- ADJUST TOP TO 1/2" BELOW GRADE. BOX TO BE SET TO PROVIDE 12" OF ADJUSTMENT.
- TYLER NO. 6860 MUELLER NO. H-10357 BIBBY-STE-CROIX B-5001 GATE VALVE BOX, SCREW TYPE, 3 PIECE, 5 1/4" SHAFT, SIZE G BOX, 7'-6" EXTENDED, #6 ROUND BASE
- PROVIDE VALVE STEM RISERS TO WITHIN 1 FOOT OF THE SURFACE.
- GATE VALVE ADAPTER: 1/4" STEEL WITH PROTECTIVE COATING, 1/2" RUBBER GASKET INSTALLED BETWEEN THE GATE VALVE AND GATE VALVE ADAPTER.
- RESILIANT WEDGE VALVE CONFORMING TO AWWA C509-01 OR C515 STANDARDS WITH STAINLESS STEEL BOLTS AND BRONZE TOP NUT
- 6 oz. ZINC ANODE CAP. SEE ENGINEERING GUIDELINES

Stantec
733 Marquette Ave Suite 1000
Minneapolis, MN 55402
www.stantec.com

GATE VALVE AND BOX INSTALLATION

CHASKA, MINNESOTA

LAST REVISION: MARCH 2019

PLATE NO. WAT-1

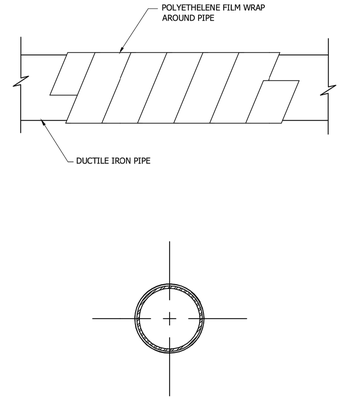

Stantec
2550 Highway 36 W
St. Paul, MN 55113
www.stantec.com

TYPICAL WATER MAIN INSTALLATION

CHASKA, MINNESOTA

LAST REVISION: MARCH 2008

PLATE NO. WAT-7

DESIGNED BY: JAP
DRAWN BY: ABL
CHECKED BY: GRP

I HEREBY CERTIFY THAT THIS PLAN, SPECIFICATION, OR REPORT WAS PREPARED BY ME OR UNDER MY DIRECT SUPERVISION AND THAT I AM A DULY LICENSED PROFESSIONAL ENGINEER UNDER THE LAWS OF THE STATE OF MINNESOTA.

JEFFREY A. PRASCH, P.E.

DATE: 12.07.21 LIC. NO.: 52706

	REVISIONS
02.21.22	CITY COMMENTS
03.22.22	CITY COMMENTS
05.25.22	CITY COMMENTS

DEMARC
LAND SURVEYING & ENGINEERING
7601 73RD AVENUE N, BROOKLYN PARK, MN 55428
PHONE: 763.560.3093 FAX: 763.560.3522
www.Demarclnc.com

TCO DESIGN
P.O. BOX 41790
PLYMOUTH, MINNESOTA 55441
763.424.3676

CANTISSIMO OF CHASKA
XXX HUNDERTMARK ROAD
CHASKA, MINNESOTA

DETAILS

PROJECT: 89556

SHEET NO. C4 OF C12

ACCEPTABLE FILL MATERIALS: STORMTECH MC-3500 CHAMBER SYSTEMS

MATERIAL LOCATION	DESCRIPTION	AASHTO MATERIAL CLASSIFICATIONS	COMPACTION / DENSITY REQUIREMENT
D	**FINAL FILL:** FILL MATERIAL FOR LAYER 'D' STARTS FROM THE TOP OF THE 'C' LAYER TO THE BOTTOM OF FLEXIBLE PAVEMENT OR UNPAVED FINISHED GRADE ABOVE. NOTE THAT PAVEMENT SUBBASE MAY BE PART OF THE 'D' LAYER	ANY SOIL/ROCK MATERIALS, NATIVE SOILS, OR PER ENGINEER'S PLANS. CHECK PLANS FOR PAVEMENT SUBGRADE REQUIREMENTS.	N/A	PREPARE PER SITE DESIGN ENGINEER'S PLANS. PAVED INSTALLATIONS MAY HAVE STRINGENT MATERIAL AND PREPARATION REQUIREMENTS.
C	**INITIAL FILL:** FILL MATERIAL FOR LAYER 'C' STARTS FROM THE TOP OF THE EMBEDMENT STONE ('B' LAYER) TO 24" (600 mm) ABOVE THE TOP OF THE CHAMBER. NOTE THAT PAVEMENT SUBBASE MAY BE A PART OF THE 'C' LAYER.	GRANULAR WELL-GRADED SOIL/AGGREGATE MIXTURES, <35% FINES OR PROCESSED AGGREGATE. MOST PAVEMENT SUBBASE MATERIALS CAN BE USED IN LIEU OF THIS LAYER.	AASHTO M145[1] A-1, A-2-4, A-3 OR AASHTO M43[1] 3, 357, 4, 467, 5, 56, 57, 6, 67, 68, 7, 78, 8, 89, 9, 10	BEGIN COMPACTIONS AFTER 24" (600 mm) OF MATERIAL OVER THE CHAMBERS IS REACHED. COMPACT ADDITIONAL LAYERS IN 12" (300 mm) MAX LIFTS TO A MIN. 95% PROCTOR DENSITY FOR WELL GRADED MATERIAL AND 95% RELATIVE DENSITY FOR PROCESSED AGGREGATE MATERIALS.
B	**EMBEDMENT STONE:** FILL SURROUNDING THE CHAMBERS FROM THE FOUNDATION STONE ('A' LAYER) TO THE 'C' LAYER ABOVE.	CLEAN, CRUSHED, ANGULAR STONE	AASHTO M43[1] 3, 4	NO COMPACTION REQUIRED.
A	**FOUNDATION STONE:** FILL BELOW CHAMBERS FROM THE SUBGRADE UP TO THE FOOT (BOTTOM) OF THE CHAMBER.	CLEAN, CRUSHED, ANGULAR STONE	AASHTO M43[1] 3, 4	PLATE COMPACT OR ROLL TO ACHIEVE A FLAT SURFACE.[2,3]

PLEASE NOTE:
1. THE LISTED AASHTO DESIGNATIONS ARE FOR GRADATIONS ONLY. THE STONE MUST ALSO BE CLEAN, CRUSHED, ANGULAR. FOR EXAMPLE, A SPECIFICATION FOR #4 STONE WOULD STATE: "CLEAN, CRUSHED, ANGULAR NO. 4 (AASHTO M43) STONE".
2. STORMTECH COMPACTION REQUIREMENTS ARE MET FOR 'A' LOCATION MATERIALS WHEN PLACED AND COMPACTED IN 9" (230 mm) (MAX) LIFTS USING TWO FULL COVERAGES WITH A VIBRATORY COMPACTOR.
3. WHERE INFILTRATION SURFACES MAY BE COMPROMISED BY COMPACTION, FOR STANDARD DESIGN LOAD CONDITIONS, A FLAT SURFACE MAY BE ACHIEVED BY RAKING OR DRAGGING WITHOUT COMPACTION EQUIPMENT. FOR SPECIAL LOAD DESIGNS, CONTACT STORMTECH FOR COMPACTION REQUIREMENTS.
4. ONCE LAYER 'C' IS PLACED, ANY SOIL/MATERIAL CAN BE PLACED IN LAYER 'D' UP TO THE FINISHED GRADE. MOST PAVEMENT SUBBASE SOILS CAN BE USED TO REPLACE THE MATERIAL REQUIREMENTS OF LAYER 'C' OR 'D' AT THE SITE DESIGN ENGINEER'S DISCRETION.

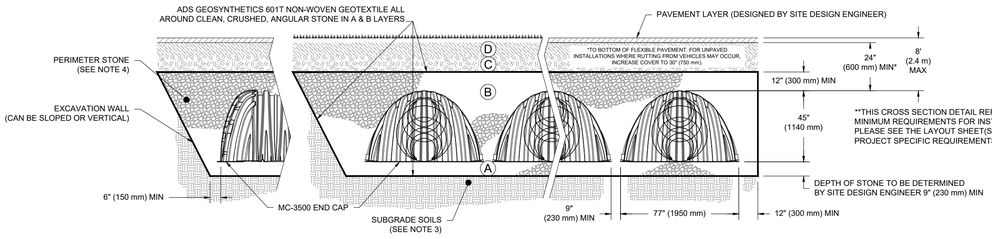

NOTES:

1. CHAMBERS SHALL MEET THE REQUIREMENTS OF ASTM F2418-16a, "STANDARD SPECIFICATION FOR POLYPROPYLENE (PP) CORRUGATED WALL STORMWATER COLLECTION CHAMBERS" CHAMBER CLASSIFICATION 45x76 DESIGNATION SS.
2. MC-3500 CHAMBERS SHALL BE DESIGNED IN ACCORDANCE WITH ASTM F2787 "STANDARD PRACTICE FOR STRUCTURAL DESIGN OF THERMOPLASTIC CORRUGATED WALL STORMWATER COLLECTION CHAMBERS".
3. THE SITE DESIGN ENGINEER IS RESPONSIBLE FOR ASSESSING THE BEARING RESISTANCE (ALLOWABLE BEARING CAPACITY) OF THE SUBGRADE SOILS AND THE DEPTH OF FOUNDATION STONE WITH CONSIDERATION FOR THE RANGE OF EXPECTED SOIL MOISTURE CONDITIONS.
4. PERIMETER STONE MUST BE EXTENDED HORIZONTALLY TO THE EXCAVATION WALL FOR BOTH VERTICAL AND SLOPED EXCAVATION WALLS.
5. REQUIREMENTS FOR HANDLING AND INSTALLATION:
   - TO MAINTAIN THE WIDTH OF CHAMBERS DURING SHIPPING AND HANDLING, CHAMBERS SHALL HAVE INTEGRAL, INTERLOCKING STACKING LUGS.
   - TO ENSURE A SECURE JOINT DURING INSTALLATION AND BACKFILL, THE HEIGHT OF THE CHAMBER JOINT SHALL NOT BE LESS THAN 3".
   - TO ENSURE THE INTEGRITY OF THE ARCH SHAPE DURING INSTALLATION, a) THE ARCH STIFFNESS CONSTANT AS DEFINED IN SECTION 6.2.8 OF ASTM F2418 SHALL BE GREATER THAN OR EQUAL TO 500 LBS/IN/IN. AND b) TO RESIST CHAMBER DEFORMATION DURING INSTALLATION AT ELEVATED TEMPERATURES (ABOVE 73° F / 23° C), CHAMBERS SHALL BE PRODUCED FROM REFLECTIVE GOLD OR YELLOW COLORS.

1 MC-3500 CROSS SECTION DETAIL

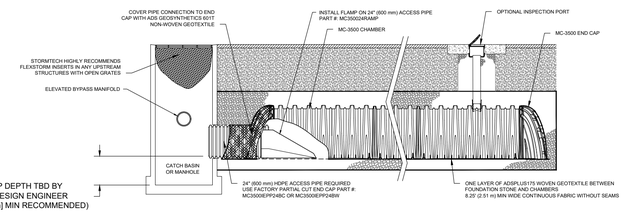

INSPECTION & MAINTENANCE

STEP 1) INSPECT ISOLATOR ROW PLUS FOR SEDIMENT
- A. INSPECTION PORTS (IF PRESENT)
  - A.1. REMOVE/OPEN LID ON NYLOPLAST INLINE DRAIN
  - A.2. REMOVE AND CLEAN FLEXSTORM FILTER IF INSTALLED
  - A.3. USING A FLASHLIGHT AND STADIA ROD, MEASURE DEPTH OF SEDIMENT AND RECORD ON MAINTENANCE LOG
  - A.4. LOWER A CAMERA INTO ISOLATOR ROW PLUS FOR VISUAL INSPECTION OF SEDIMENT LEVELS (OPTIONAL)
  - A.5. IF SEDIMENT IS AT, OR ABOVE, 3" (80 mm) PROCEED TO STEP 2. IF NOT, PROCEED TO STEP 3.
- B. ALL ISOLATOR PLUS ROWS
  - B.1. REMOVE COVER FROM STRUCTURE AT UPSTREAM END OF ISOLATOR ROW PLUS
  - B.2. USING A FLASHLIGHT, INSPECT DOWN THE ISOLATOR ROW PLUS THROUGH OUTLET PIPE
    - i) MIRRORS ON POLES OR CAMERAS MAY BE USED TO AVOID A CONFINED SPACE ENTRY
    - ii) FOLLOW OSHA REGULATIONS FOR CONFINED SPACE ENTRY IF ENTERING MANHOLE
  - B.3. IF SEDIMENT IS AT, OR ABOVE, 3" (80 mm) PROCEED TO STEP 2. IF NOT, PROCEED TO STEP 3.

STEP 2) CLEAN OUT ISOLATOR ROW PLUS USING THE JETVAC PROCESS
- A. A FIXED CULVERT CLEANING NOZZLE WITH REAR FACING SPREAD OF 45° (1.1 m) OR MORE IS PREFERRED
- B. APPLY MULTIPLE PASSES OF JETVAC UNTIL BACKFLUSH WATER IS CLEAN
- C. VACUUM STRUCTURE SUMP AS REQUIRED

STEP 3) REPLACE ALL COVERS, GRATES, FILTERS, AND LIDS; RECORD OBSERVATIONS AND ACTIONS.

STEP 4) INSPECT AND CLEAN BASINS AND MANHOLES UPSTREAM OF THE STORMTECH SYSTEM.

NOTES

1. INSPECT EVERY 6 MONTHS DURING THE FIRST YEAR OF OPERATION. ADJUST THE INSPECTION INTERVAL BASED ON PREVIOUS OBSERVATIONS OF SEDIMENT ACCUMULATION AND HIGH WATER ELEVATIONS.
2. CONDUCT JETTING AND VACTORING ANNUALLY OR WHEN INSPECTION SHOWS THAT MAINTENANCE IS NECESSARY.

4 MC-3500 ISOLATOR ROW PLUS DETAIL

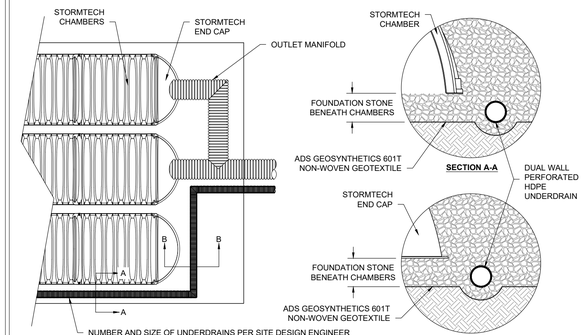

2 UNDERDRAIN DETAIL

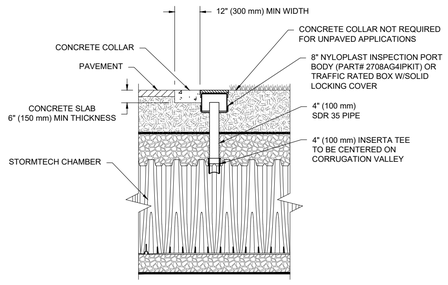

NOTE:
INSPECTION PORTS MAY BE CONNECTED THROUGH ANY CHAMBER CORRUGATION VALLEY.

3 4" PVC INSPECTION PORT DETAIL (MC SERIES CHAMBER)

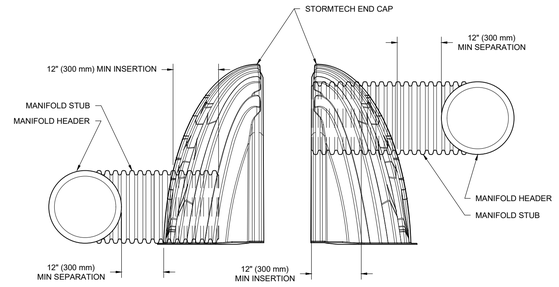

NOTE: MANIFOLD STUB MUST BE LAID HORIZONTAL FOR A PROPER FIT IN END CAP OPENING.

5 MC-SERIES END CAP INSERTION DETAIL

MC-3500 STORMTECH CHAMBER SPECIFICATIONS

1. CHAMBERS SHALL BE STORMTECH MC-3500.
2. CHAMBERS SHALL BE ARCH-SHAPED AND SHALL BE MANUFACTURED FROM VIRGIN, IMPACT-MODIFIED POLYPROPYLENE COPOLYMERS.
3. CHAMBERS SHALL MEET THE REQUIREMENTS OF ASTM F2418-16a, "STANDARD SPECIFICATION FOR POLYPROPYLENE (PP) CORRUGATED WALL STORMWATER COLLECTION CHAMBERS" CHAMBER CLASSIFICATION 45x76 DESIGNATION SS.
4. CHAMBER ROWS SHALL PROVIDE CONTINUOUS, UNOBSTRUCTED INTERNAL SPACE WITH NO INTERNAL SUPPORTS THAT WOULD IMPEDE FLOW OR LIMIT ACCESS FOR INSPECTION.
5. THE STRUCTURAL DESIGN OF THE CHAMBERS, THE STRUCTURAL BACKFILL, AND THE INSTALLATION REQUIREMENTS SHALL ENSURE THAT THE LOAD FACTORS SPECIFIED IN THE AASHTO LRFD BRIDGE DESIGN SPECIFICATIONS, SECTION 12.12, ARE MET FOR: 1) LONG-DURATION DEAD LOADS AND 2) SHORT-DURATION LIVE LOADS, BASED ON THE AASHTO DESIGN TRUCK WITH CONSIDERATION FOR IMPACT AND MULTIPLE VEHICLE PRESENCES.
6. CHAMBERS SHALL BE DESIGNED, TESTED AND ALLOWABLE LOAD CONFIGURATIONS DETERMINED IN ACCORDANCE WITH ASTM F2787, "STANDARD PRACTICE FOR STRUCTURAL DESIGN OF THERMOPLASTIC CORRUGATED WALL STORMWATER COLLECTION CHAMBERS". LOAD CONFIGURATIONS SHALL INCLUDE: 1) INSTANTANEOUS (<1 MIN) AASHTO DESIGN TRUCK LIVE LOAD ON MINIMUM COVER 2) MAXIMUM PERMANENT (75-YR) COVER LOAD AND 3) ALLOWABLE COVER WITH PARKED (1-WEEK) AASHTO DESIGN TRUCK.
7. REQUIREMENTS FOR HANDLING AND INSTALLATION:
   - TO MAINTAIN THE WIDTH OF CHAMBERS DURING SHIPPING AND HANDLING, CHAMBERS SHALL HAVE INTEGRAL, INTERLOCKING STACKING LUGS.
   - TO ENSURE A SECURE JOINT DURING INSTALLATION AND BACKFILL, THE HEIGHT OF THE CHAMBER JOINT SHALL NOT BE LESS THAN 3".
   - TO ENSURE THE INTEGRITY OF THE ARCH SHAPE DURING INSTALLATION, a) THE ARCH STIFFNESS CONSTANT AS DEFINED IN SECTION 6.2.8 OF ASTM F2418 SHALL BE GREATER THAN OR EQUAL TO 500 LBS/IN/IN. AND b) TO RESIST CHAMBER DEFORMATION DURING INSTALLATION AT ELEVATED TEMPERATURES (ABOVE 73° F / 23° C), CHAMBERS SHALL BE PRODUCED FROM REFLECTIVE GOLD OR YELLOW COLORS.
8. ONLY CHAMBERS THAT ARE APPROVED BY THE SITE DESIGN ENGINEER WILL BE ALLOWED. UPON REQUEST BY THE SITE DESIGN ENGINEER OR OWNER, THE CHAMBER MANUFACTURER SHALL SUBMIT A STRUCTURAL EVALUATION FOR APPROVAL BEFORE DELIVERING CHAMBERS TO THE PROJECT SITE AS FOLLOWS:
   - THE STRUCTURAL EVALUATION SHALL BE SEALED BY A REGISTERED PROFESSIONAL ENGINEER.
   - THE STRUCTURAL EVALUATION SHALL DEMONSTRATE THAT THE SAFETY FACTORS ARE GREATER THAN OR EQUAL TO 1.95 FOR DEAD LOAD AND 1.75 FOR LIVE LOAD, THE MINIMUM REQUIRED BY ASTM F2787 AND BY SECTIONS 3 AND 12.12 OF THE AASHTO LRFD BRIDGE DESIGN SPECIFICATIONS FOR THERMOPLASTIC PIPE.
   - THE TEST DERIVED CREEP MODULUS AS SPECIFIED IN ASTM F2418 SHALL BE USED FOR PERMANENT DEAD LOAD DESIGN EXCEPT THAT IT SHALL BE THE 75-YEAR MODULUS USED FOR DESIGN.
9. CHAMBERS AND END CAPS SHALL BE PRODUCED AT AN ISO 9001 CERTIFIED MANUFACTURING FACILITY.

IMPORTANT - NOTES FOR THE BIDDING AND INSTALLATION OF MC-3500 CHAMBER SYSTEM

1. STORMTECH MC-3500 CHAMBERS SHALL NOT BE INSTALLED UNTIL THE MANUFACTURER'S REPRESENTATIVE HAS COMPLETED A PRE-CONSTRUCTION MEETING WITH THE INSTALLERS.
2. STORMTECH MC-3500 CHAMBERS SHALL BE INSTALLED IN ACCORDANCE WITH THE "STORMTECH MC-3500/MC-4500 CONSTRUCTION GUIDE".
3. CHAMBERS ARE NOT TO BE BACKFILLED WITH A DOZER OR AN EXCAVATOR SITUATED OVER THE CHAMBERS.
   STORMTECH RECOMMENDS 3 BACKFILL METHODS:
   - STONESHOOTER LOCATED OFF THE CHAMBER BED.
   - BACKFILL AS ROWS ARE BUILT USING AN EXCAVATOR ON THE FOUNDATION STONE OR SUBGRADE.
   - BACKFILL FROM OUTSIDE THE EXCAVATION USING A LONG BOOM HOE OR EXCAVATOR.
4. THE FOUNDATION STONE SHALL BE LEVELED AND COMPACTED PRIOR TO PLACING CHAMBERS.
5. JOINTS BETWEEN CHAMBERS SHALL BE PROPERLY SEATED PRIOR TO PLACING STONE.
6. MAINTAIN MINIMUM - SPACING BETWEEN THE CHAMBER ROWS.
7. INLET AND OUTLET MANIFOLDS MUST BE INSERTED A MINIMUM OF 12" (300 mm) INTO CHAMBER END CAPS.
8. EMBEDMENT STONE SURROUNDING CHAMBERS MUST BE A CLEAN, CRUSHED, ANGULAR STONE MEETING THE AASHTO M43 DESIGNATION OF #3 OR #4.
9. STONE MUST BE PLACED ON THE TOP CENTER OF THE CHAMBER TO ANCHOR THE CHAMBERS IN PLACE AND PRESERVE ROW SPACING.
10. THE CONTRACTOR MUST REPORT ANY DISCREPANCIES WITH CHAMBER FOUNDATION MATERIALS BEARING CAPACITIES TO THE SITE DESIGN ENGINEER.
11. ADS RECOMMENDS THE USE OF "FLEXSTORM CATCH IT" INSERTS DURING CONSTRUCTION FOR ALL INLETS TO PROTECT THE SUBSURFACE STORMWATER MANAGEMENT SYSTEM FROM CONSTRUCTION SITE RUNOFF.

NOTES FOR CONSTRUCTION EQUIPMENT

1. STORMTECH MC-3500 CHAMBERS SHALL BE INSTALLED IN ACCORDANCE WITH THE "STORMTECH MC-3500/MC-4500 CONSTRUCTION GUIDE".
2. THE USE OF EQUIPMENT OVER MC-3500 CHAMBERS IS LIMITED:
   - NO EQUIPMENT IS ALLOWED ON BARE CHAMBERS.
   - NO RUBBER TIRED LOADER, DUMP TRUCK, OR EXCAVATORS ARE ALLOWED UNTIL PROPER FILL DEPTHS ARE REACHED IN ACCORDANCE WITH THE "STORMTECH MC-3500/MC-4500 CONSTRUCTION GUIDE".
   - WEIGHT LIMITS FOR CONSTRUCTION EQUIPMENT CAN BE FOUND IN THE "STORMTECH MC-3500/MC-4500 CONSTRUCTION GUIDE".
3. FULL 36" (900 mm) OF STABILIZED COVER MATERIALS OVER THE CHAMBERS IS REQUIRED FOR DUMP TRUCK TRAVEL OR DUMPING.

USE OF A DOZER TO PUSH EMBEDMENT STONE BETWEEN THE ROWS OF CHAMBERS MAY CAUSE DAMAGE TO CHAMBERS AND IS NOT AN ACCEPTABLE BACKFILL METHOD. ANY CHAMBERS DAMAGED BY USING THE "DUMP AND PUSH" METHOD ARE NOT COVERED UNDER THE STORMTECH STANDARD WARRANTY.

CONTACT STORMTECH AT 1-888-892-2694 WITH ANY QUESTIONS ON INSTALLATION REQUIREMENTS OR WEIGHT LIMITS FOR CONSTRUCTION EQUIPMENT.

DESIGNED BY: JAP	I HEREBY CERTIFY THAT THIS PLAN, SPECIFICATION, OR REPORT WAS PREPARED BY ME OR UNDER MY DIRECT SUPERVISION AND THAT I AM A DULY LICENSED PROFESSIONAL ENGINEER UNDER THE LAWS OF THE STATE OF MINNESOTA.	02.21.22	CITY COMMENTS
DRAWN BY: ABL		03.22.22	CITY COMMENTS
CHECKED BY: GRP	JEFFREY A. PRASCH, P.E. DATE: 12.07.21 LIC. NO.: 52706		

REVISIONS

DEMARC
LAND SURVEYING & ENGINEERING
7601 73RD AVENUE N, BROOKLYN PARK, MN 55428
PHONE: 763.560.3093 FAX: 763.560.3522
www.Demarcinc.com

TCO DESIGN
P.O. BOX 41790
PLYMOUTH, MINNESOTA 55441
763.424.3676

CANTISSIMO OF CHASKA
XXX HUNDERTMARK ROAD
CHASKA, MINNESOTA

DETAILS

PROJECT: 89556

SHEET NO. C5 OF C12

J:\survey\28-116-23\chaska assisted living\02 engineering - 89556\01 CAD\05 Sheet Files\02 Details.dwg

SC-310 STORMTECH CHAMBER SPECIFICATIONS

1. CHAMBERS SHALL BE STORMTECH SC-310.
2. CHAMBERS SHALL BE ARCH-SHAPED AND SHALL BE MANUFACTURED FROM VIRGIN, IMPACT-MODIFIED POLYPROPYLENE OR POLYETHYLENE COPOLYMERS.
3. CHAMBERS SHALL MEET THE REQUIREMENTS OF ASTM F2922 (POLETHYLENE) OR ASTM F2418-16a (POLYPROPYLENE), "STANDARD SPECIFICATION FOR CORRUGATED WALL STORMWATER COLLECTION CHAMBERS".
4. CHAMBER ROWS SHALL PROVIDE CONTINUOUS, UNOBSTRUCTED INTERNAL SPACE WITH NO INTERNAL SUPPORTS THAT WOULD IMPEDE FLOW OR LIMIT ACCESS FOR INSPECTION.
5. THE STRUCTURAL DESIGN OF THE CHAMBERS, THE STRUCTURAL BACKFILL, AND THE INSTALLATION REQUIREMENTS SHALL ENSURE THAT THE LOAD FACTORS SPECIFIED IN THE AASHTO LRFD BRIDGE DESIGN SPECIFICATIONS, SECTION 12.12, ARE MET FOR: 1) LONG-DURATION DEAD LOADS AND 2) SHORT-DURATION LIVE LOADS, BASED ON THE AASHTO DESIGN TRUCK WITH CONSIDERATION FOR IMPACT AND MULTIPLE VEHICLE PRESENCES.
6. CHAMBERS SHALL BE DESIGNED, TESTED AND ALLOWABLE LOAD CONFIGURATIONS DETERMINED IN ACCORDANCE WITH ASTM F2787, "STANDARD PRACTICE FOR STRUCTURAL DESIGN OF THERMOPLASTIC CORRUGATED WALL STORMWATER COLLECTION CHAMBERS". LOAD CONFIGURATIONS SHALL INCLUDE: 1) INSTANTANEOUS (<1 MIN) AASHTO DESIGN TRUCK LIVE LOAD ON MINIMUM COVER 2) MAXIMUM PERMANENT (75-YR) COVER LOAD AND 3) ALLOWABLE COVER WITH PARKED (1-WEEK) AASHTO DESIGN TRUCK.
7. REQUIREMENTS FOR HANDLING AND INSTALLATION:
   - TO MAINTAIN THE WIDTH OF CHAMBERS DURING SHIPPING AND HANDLING, CHAMBERS SHALL HAVE INTEGRAL, INTERLOCKING STACKING LUGS.
   - TO ENSURE A SECURE JOINT DURING INSTALLATION AND BACKFILL, THE HEIGHT OF THE CHAMBER JOINT SHALL NOT BE LESS THAN 2".
   - TO ENSURE THE INTEGRITY OF THE ARCH SHAPE DURING INSTALLATION, a) THE ARCH STIFFNESS CONSTANT AS DEFINED IN SECTION 6.2.8 OF ASTM F2922 SHALL BE GREATER THAN OR EQUAL TO 400 LBS/IN/IN. AND b) TO RESIST CHAMBER DEFORMATION DURING INSTALLATION AT ELEVATED TEMPERATURES (ABOVE 73° F / 23° C), CHAMBERS SHALL BE PRODUCED FROM REFLECTIVE GOLD OR YELLOW COLORS.
8. ONLY CHAMBERS THAT ARE APPROVED BY THE SITE DESIGN ENGINEER WILL BE ALLOWED. UPON REQUEST BY THE SITE DESIGN ENGINEER OR OWNER, THE CHAMBER MANUFACTURER SHALL SUBMIT A STRUCTURAL EVALUATION FOR APPROVAL BEFORE DELIVERING CHAMBERS TO THE PROJECT SITE AS FOLLOWS:
   - THE STRUCTURAL EVALUATION SHALL BE SEALED BY A REGISTERED PROFESSIONAL ENGINEER.
   - THE STRUCTURAL EVALUATION SHALL DEMONSTRATE THAT THE SAFETY FACTORS ARE GREATER THAN OR EQUAL TO 1.95 FOR DEAD LOAD AND 1.75 FOR LIVE LOAD. THE MINIMUM REQUIRED BY ASTM F2787 AND BY SECTIONS 3 AND 12.12 OF THE AASHTO LRFD BRIDGE DESIGN SPECIFICATIONS FOR THERMOPLASTIC PIPE.
   - THE TEST DERIVED CREEP MODULUS AS SPECIFIED IN ASTM F2922 SHALL BE USED FOR PERMANENT DEAD LOAD DESIGN EXCEPT THAT IT SHALL BE THE 75-YEAR MODULUS USED FOR DESIGN.
9. CHAMBERS AND END CAPS SHALL BE PRODUCED AT AN ISO 9001 CERTIFIED MANUFACTURING FACILITY.

IMPORTANT - NOTES FOR THE BIDDING AND INSTALLATION OF THE SC-310 SYSTEM

1. STORMTECH SC-310 CHAMBERS SHALL NOT BE INSTALLED UNTIL THE MANUFACTURER'S REPRESENTATIVE HAS COMPLETED A PRE-CONSTRUCTION MEETING WITH THE INSTALLERS.
2. STORMTECH SC-310 CHAMBERS SHALL BE INSTALLED IN ACCORDANCE WITH THE "STORMTECH SC-310/SC-740/DC-780 CONSTRUCTION GUIDE".
3. CHAMBERS ARE NOT TO BE BACKFILLED WITH A DOZER OR AN EXCAVATOR SITUATED OVER THE CHAMBERS.
   STORMTECH RECOMMENDS 3 BACKFILL METHODS:
   - STONESHOOTER LOCATED OFF THE CHAMBER BED.
   - BACKFILL AS ROWS ARE BUILT USING AN EXCAVATOR ON THE FOUNDATION STONE OR SUBGRADE.
   - BACKFILL FROM OUTSIDE THE EXCAVATION USING A LONG BOOM HOE OR EXCAVATOR.
4. THE FOUNDATION STONE SHALL BE LEVELED AND COMPACTED PRIOR TO PLACING CHAMBERS.
5. JOINTS BETWEEN CHAMBERS SHALL BE PROPERLY SEATED PRIOR TO PLACING STONE.
6. MAINTAIN MINIMUM - 6" (150 mm) SPACING BETWEEN THE CHAMBER ROWS.
7. EMBEDMENT STONE SURROUNDING CHAMBERS MUST BE A CLEAN, CRUSHED, ANGULAR STONE 3/4-2" (20-50 mm).
8. THE CONTRACTOR MUST REPORT ANY DISCREPANCIES WITH CHAMBER FOUNDATION MATERIALS BEARING CAPACITIES TO THE SITE DESIGN ENGINEER.
9. ADS RECOMMENDS THE USE OF "FLEXSTORM CATCH IT" INSERTS DURING CONSTRUCTION FOR ALL INLETS TO PROTECT THE SUBSURFACE STORMWATER MANAGEMENT SYSTEM FROM CONSTRUCTION SITE RUNOFF.

NOTES FOR CONSTRUCTION EQUIPMENT

1. STORMTECH SC-310 CHAMBERS SHALL BE INSTALLED IN ACCORDANCE WITH THE "STORMTECH SC-310/SC-740/DC-780 CONSTRUCTION GUIDE".
2. THE USE OF CONSTRUCTION EQUIPMENT OVER SC-310 & SC-740 CHAMBERS IS LIMITED:
   - NO EQUIPMENT IS ALLOWED ON BARE CHAMBERS.
   - NO RUBBER TIRED LOADERS, DUMP TRUCKS, OR EXCAVATORS ARE ALLOWED UNTIL PROPER FILL DEPTHS ARE REACHED IN ACCORDANCE WITH THE "STORMTECH SC-310/SC-740/DC-780 CONSTRUCTION GUIDE".
   - WEIGHT LIMITS FOR CONSTRUCTION EQUIPMENT CAN BE FOUND IN THE "STORMTECH SC-310/SC-740/DC-780 CONSTRUCTION GUIDE".
3. FULL 36" (900 mm) OF STABILIZED COVER MATERIALS OVER THE CHAMBERS IS REQUIRED FOR DUMP TRUCK TRAVEL OR DUMPING.

USE OF A DOZER TO PUSH EMBEDMENT STONE BETWEEN THE ROWS OF CHAMBERS MAY CAUSE DAMAGE TO THE CHAMBERS AND IS NOT AN ACCEPTABLE BACKFILL METHOD. ANY CHAMBERS DAMAGED BY THE "DUMP AND PUSH" METHOD ARE NOT COVERED UNDER THE STORMTECH STANDARD WARRANTY.

CONTACT STORMTECH AT 1-888-892-2694 WITH ANY QUESTIONS ON INSTALLATION REQUIREMENTS OR WEIGHT LIMITS FOR CONSTRUCTION EQUIPMENT.

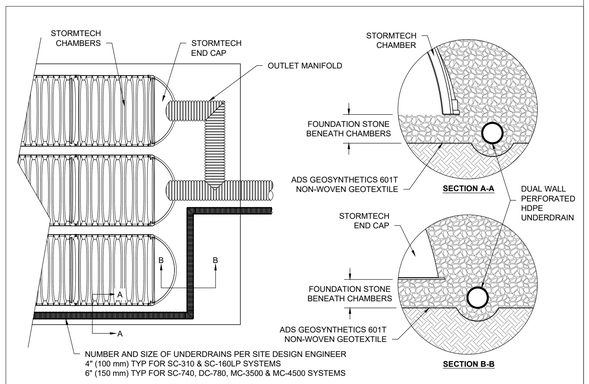

1 UNDERDRAIN DETAIL

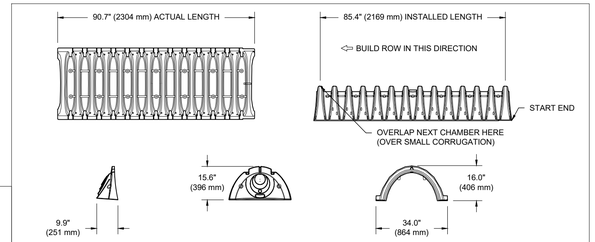

NOMINAL CHAMBER SPECIFICATIONS

SIZE (W X H X INSTALLED LENGTH)	34.0" X 16.0" X 85.4"	(864 mm X 406 mm X 2169 mm)
CHAMBER STORAGE	14.7 CUBIC FEET	(0.42 m³)
MINIMUM INSTALLED STORAGE*	31.0 CUBIC FEET	(0.88 m³)
WEIGHT	35.0 lbs.	(16.8 kg)

*ASSUMES 6" (152 mm) ABOVE, BELOW, AND BETWEEN CHAMBERS

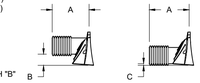

PRE-FAB STUB AT BOTTOM OF END CAP WITH FLAMP END WITH "BR"
PRE-FAB STUBS AT BOTTOM OF END CAP FOR PART NUMBERS ENDING WITH "B"
PRE-FAB STUBS AT TOP OF END CAP FOR PART NUMBERS ENDING WITH "T"
PRE CORED END CAPS END WITH "PC"

PART #	STUB	A	B	C
SC310EPE06T / SC310EPE06TPC	6" (150 mm)	9.6" (244 mm)	5.8" (147 mm)	---
SC310EPE06B / SC310EPE06BPC			---	0.5" (13 mm)
SC310EPE08T / SC310EPE08TPC	8" (200 mm)	11.9" (302 mm)	3.5" (89 mm)	---
SC310EPE08B / SC310EPE08BPC			---	0.6" (15 mm)
SC310EPE10T / SC310EPE10TPC	10" (250 mm)	12.7" (323 mm)	1.4" (36 mm)	---
SC310EPE10B / SC310EPE10BPC			---	0.7" (18 mm)
SC310EPE12B	12" (300 mm)	13.5" (343 mm)	---	0.9" (23 mm)
SC310EPE12BR	12" (300 mm)	13.5" (343 mm)	---	0.9" (23 mm)

ALL STUBS, EXCEPT FOR THE SC310EPE12B ARE PLACED AT BOTTOM OF END CAP SUCH THAT THE OUTSIDE DIAMETER OF THE STUB IS FLUSH WITH THE BOTTOM OF THE END CAP. FOR ADDITIONAL INFORMATION CONTACT STORMTECH AT 1-888-892-2694.

* FOR THE SC310EPE12B THE 12" (300 mm) STUB LIES BELOW THE BOTTOM OF THE END CAP APPROXIMATELY 0.25" (6 mm). BACKFILL MATERIAL SHOULD BE REMOVED FROM BELOW THE N-12 STUB SO THAT THE FITTING SITS LEVEL.

NOTE: ALL DIMENSIONS ARE NOMINAL

2 SC-310 TECHNICAL SPECIFICATIONS

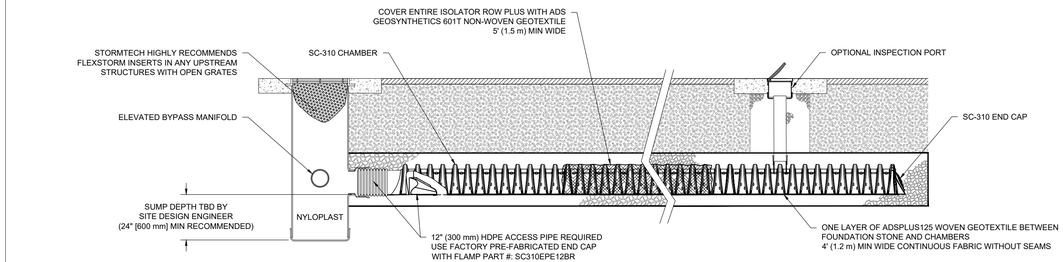

3 SC-310 ISOLATOR ROW PLUS DETAIL

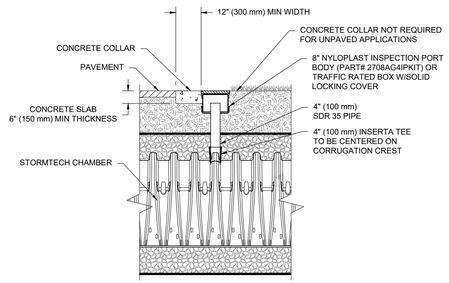

NOTE:
INSPECTION PORTS MAY BE CONNECTED THROUGH ANY CHAMBER CORRUGATION CREST.

INSPECTION & MAINTENANCE

STEP 1) INSPECT ISOLATOR ROW PLUS FOR SEDIMENT
- A. INSPECTION PORTS (IF PRESENT)
  - A.1. REMOVE/OPEN LID ON NYLOPLAST INLINE DRAIN
  - A.2. REMOVE AND CLEAN FLEXSTORM FILTER IF INSTALLED
  - A.3. USING A FLASHLIGHT AND STADIA ROD, MEASURE DEPTH OF SEDIMENT AND RECORD ON MAINTENANCE LOG
  - A.4. LOWER A CAMERA INTO ISOLATOR ROW PLUS FOR VISUAL INSPECTION OF SEDIMENT LEVELS (OPTIONAL)
  - A.5. IF SEDIMENT IS AT, OR ABOVE, 3" (80 mm) PROCEED TO STEP 2. IF NOT, PROCEED TO STEP 3.
- B. ALL ISOLATOR PLUS ROWS
  - B.1. REMOVE COVER FROM STRUCTURE AT UPSTREAM END OF ISOLATOR ROW PLUS
  - B.2. USING A FLASHLIGHT, INSPECT DOWN THE ISOLATOR ROW PLUS THROUGH OUTLET PIPE
    - i) MIRRORS ON POLES OR CAMERAS MAY BE USED TO AVOID A CONFINED SPACE ENTRY
    - ii) FOLLOW OSHA REGULATIONS FOR CONFINED SPACE ENTRY IF ENTERING MANHOLE
  - B.3. IF SEDIMENT IS AT, OR ABOVE, 3" (80 mm) PROCEED TO STEP 2. IF NOT, PROCEED TO STEP 3.

STEP 2) CLEAN OUT ISOLATOR ROW PLUS USING THE JETVAC PROCESS
- A. A FIXED CULVERT CLEANING NOZZLE WITH REAR FACING SPREAD OF 45° (1.1 m) OR MORE IS PREFERRED
- B. APPLY MULTIPLE PASSES OF JETVAC UNTIL BACKFLUSH WATER IS CLEAN
- C. VACUUM STRUCTURE SUMP AS REQUIRED

STEP 3) REPLACE ALL COVERS, GRATES, FILTERS, AND LIDS; RECORD OBSERVATIONS AND ACTIONS.

STEP 4) INSPECT AND CLEAN BASINS AND MANHOLES UPSTREAM OF THE STORMTECH SYSTEM.

NOTES

1. INSPECT EVERY 6 MONTHS DURING THE FIRST YEAR OF OPERATION. ADJUST THE INSPECTION INTERVAL BASED ON PREVIOUS OBSERVATIONS OF SEDIMENT ACCUMULATION AND HIGH WATER ELEVATIONS.
2. CONDUCT JETTING AND VACTORING ANNUALLY OR WHEN INSPECTION SHOWS THAT MAINTENANCE IS NECESSARY.

4 4" PVC INSPECTION PORT DETAIL (SC SERIES CHAMBER)

ACCEPTABLE FILL MATERIALS: STORMTECH SC-310 CHAMBER SYSTEMS

	MATERIAL LOCATION	DESCRIPTION	AASHTO MATERIAL CLASSIFICATIONS	COMPACTION / DENSITY REQUIREMENT
D	**FINAL FILL:** FILL MATERIAL FOR LAYER 'D' STARTS FROM THE TOP OF THE 'C' LAYER TO THE BOTTOM OF FLEXIBLE PAVEMENT OR UNPAVED FINISHED GRADE ABOVE. NOTE THAT PAVEMENT SUBBASE MAY BE PART OF THE 'D' LAYER.	ANY SOIL/ROCK MATERIALS, NATIVE SOILS, OR PER ENGINEER'S PLANS. CHECK PLANS FOR PAVEMENT SUBGRADE REQUIREMENTS.	N/A	PREPARE PER SITE DESIGN ENGINEER'S PLANS. PAVED INSTALLATIONS MAY HAVE STRINGENT MATERIAL AND PREPARATION REQUIREMENTS.
C	**INITIAL FILL:** FILL MATERIAL FOR LAYER 'C' STARTS FROM THE TOP OF THE EMBEDMENT STONE ('B' LAYER) TO 18" (450 mm) ABOVE THE TOP OF THE CHAMBER. NOTE THAT PAVEMENT SUBBASE MAY BE A PART OF THE 'C' LAYER.	GRANULAR WELL-GRADED SOIL/AGGREGATE MIXTURES, <35% FINES OR PROCESSED AGGREGATE. MOST PAVEMENT SUBBASE MATERIALS CAN BE USED IN LIEU OF THIS LAYER.	AASHTO M145[1] A-1, A-2-4, A-3 OR AASHTO M43[1] 3, 357, 4, 467, 5, 56, 57, 6, 67, 68, 7, 78, 8, 89, 9, 10	BEGIN COMPACTIONS AFTER 12" (300 mm) OF MATERIAL OVER THE CHAMBERS IS REACHED. COMPACT ADDITIONAL LAYERS IN 6" (150 mm) MAX LIFTS TO A MIN. 95% PROCTOR DENSITY FOR WELL GRADED MATERIAL AND 95% RELATIVE DENSITY FOR PROCESSED AGGREGATE MATERIALS. ROLLER GROSS VEHICLE WEIGHT NOT TO EXCEED 12,000 lbs (53 kN). DYNAMIC FORCE NOT TO EXCEED 20,000 lbs (89 kN).
B	**EMBEDMENT STONE:** FILL SURROUNDING THE CHAMBERS FROM THE FOUNDATION STONE ('A' LAYER) TO THE 'C' LAYER ABOVE.	CLEAN, CRUSHED, ANGULAR STONE	AASHTO M43[1] 3, 357, 4, 467, 5, 56, 57	NO COMPACTION REQUIRED.
A	**FOUNDATION STONE:** FILL BELOW CHAMBERS FROM THE SUBGRADE UP TO THE FOOT (BOTTOM) OF THE CHAMBER.	CLEAN, CRUSHED, ANGULAR STONE	AASHTO M43[1] 3, 357, 4, 467, 5, 56, 57	PLATE COMPACT OR ROLL TO ACHIEVE A FLAT SURFACE.[2,3]

PLEASE NOTE:
1. THE LISTED AASHTO DESIGNATIONS ARE FOR GRADATIONS ONLY. THE STONE MUST ALSO BE CLEAN, CRUSHED, ANGULAR. FOR EXAMPLE, A SPECIFICATION FOR #4 STONE WOULD STATE: "CLEAN, CRUSHED, ANGULAR NO. 4 (AASHTO M43) STONE".
2. STORMTECH COMPACTION REQUIREMENTS ARE MET FOR 'A' LOCATION MATERIALS WHEN PLACED AND COMPACTED IN 6" (150 mm) (MAX) LIFTS USING TWO FULL COVERAGES WITH A VIBRATORY COMPACTOR.
3. WHERE INFILTRATION SURFACES MAY BE COMPROMISED BY COMPACTION, FOR STANDARD DESIGN LOAD CONDITIONS, A FLAT SURFACE MAY BE ACHIEVED BY RAKING OR DRAGGING WITHOUT COMPACTION EQUIPMENT. FOR SPECIAL LOAD DESIGNS, CONTACT STORMTECH FOR COMPACTION REQUIREMENTS.
4. ONCE LAYER 'C' IS PLACED, ANY SOIL/MATERIAL CAN BE PLACED IN LAYER 'D' UP TO THE FINISHED GRADE. MOST PAVEMENT SUBBASE SOILS CAN BE USED TO REPLACE THE MATERIAL REQUIREMENTS OF LAYER 'C' OR 'D' AT THE SITE DESIGN ENGINEER'S DISCRETION.

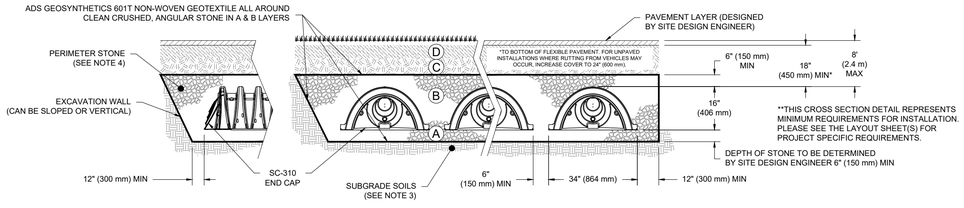

NOTES:

1. CHAMBERS SHALL MEET THE REQUIREMENTS OF ASTM F2922 (POLETHYLENE) OR ASTM F2418-16a (POLYPROPYLENE), "STANDARD SPECIFICATION FOR CORRUGATED WALL STORMWATER COLLECTION CHAMBERS".
2. SC-310 CHAMBERS SHALL BE DESIGNED IN ACCORDANCE WITH ASTM F2787 "STANDARD PRACTICE FOR STRUCTURAL DESIGN OF THERMOPLASTIC CORRUGATED WALL STORMWATER COLLECTION CHAMBERS".
3. THE SITE DESIGN ENGINEER IS RESPONSIBLE FOR ASSESSING THE BEARING RESISTANCE (ALLOWABLE BEARING CAPACITY) OF THE SUBGRADE SOILS AND THE DEPTH OF FOUNDATION STONE WITH CONSIDERATION FOR THE RANGE OF EXPECTED SOIL MOISTURE CONDITIONS.
4. PERIMETER STONE MUST BE EXTENDED HORIZONTALLY TO THE EXCAVATION WALL FOR BOTH VERTICAL AND SLOPED EXCAVATION WALLS.
5. REQUIREMENTS FOR HANDLING AND INSTALLATION:
   - TO MAINTAIN THE WIDTH OF CHAMBERS DURING SHIPPING AND HANDLING, CHAMBERS SHALL HAVE INTEGRAL, INTERLOCKING STACKING LUGS.
   - TO ENSURE A SECURE JOINT DURING INSTALLATION AND BACKFILL, THE HEIGHT OF THE CHAMBER JOINT SHALL NOT BE LESS THAN 2".
   - TO ENSURE THE INTEGRITY OF THE ARCH SHAPE DURING INSTALLATION, a) THE ARCH STIFFNESS CONSTANT AS DEFINED IN SECTION 6.2.8 OF ASTM F2922 SHALL BE GREATER THAN OR EQUAL TO 400 LBS/IN/IN. AND b) TO RESIST CHAMBER DEFORMATION DURING INSTALLATION AT ELEVATED TEMPERATURES (ABOVE 73° F / 23° C), CHAMBERS SHALL BE PRODUCED FROM REFLECTIVE GOLD OR YELLOW COLORS.

5 SC-310 CROSS SECTION DETAIL

DESIGNED BY: JAP	I HEREBY CERTIFY THAT THIS PLAN, SPECIFICATION, OR REPORT WAS PREPARED BY ME OR UNDER MY DIRECT SUPERVISION AND THAT I AM A DULY LICENSED PROFESSIONAL ENGINEER UNDER THE LAWS OF THE STATE OF MINNESOTA.	04.21.22	CITY COMMENTS
DRAWN BY: ABL	JEFFREY A. PRASCH, P.E.		
CHECKED BY: GRP	DATE: 12.07.21 LIC. NO.: 52706		

DEMARC
LAND SURVEYING & ENGINEERING
7601 73RD AVENUE N, BROOKLYN PARK, MN 55428
PHONE: 763.560.3093 FAX: 763.560.3522
www.DemarcInc.com

TCO DESIGN
P.O. BOX 41790
PLYMOUTH, MINNESOTA 55441
763.424.3676

CANTISSIMO OF CHASKA
XXX HUNDERTMARK ROAD
CHASKA, MINNESOTA

DETAILS

PROJECT: 89556
SHEET NO. C6 OF C12

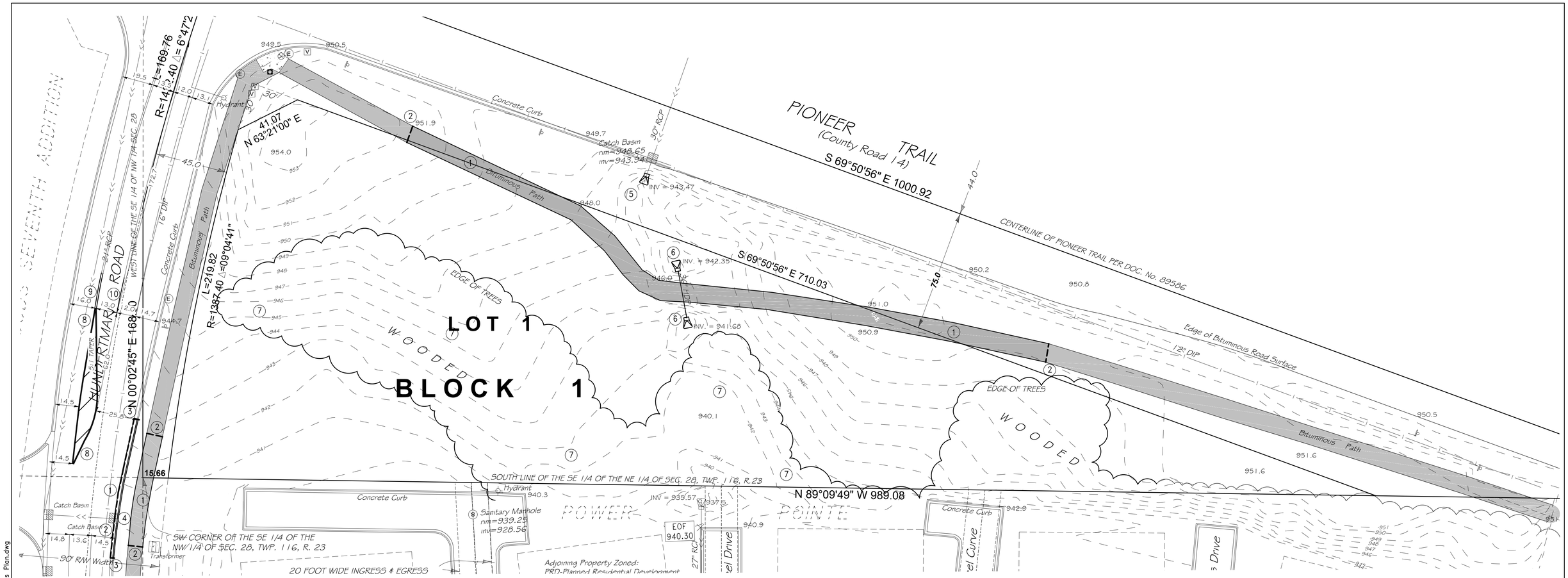

REFERENCE NOTES:

1. REMOVE BITUMINOUS PATH (FULL DEPTH)
2. SAWCUT BITUMINOUS PAVEMENT (FULL DEPTH)
3. SAWCUT CONCRETE CURB & GUTTER
4. REMOVE CONCRETE CURB AND GUTTER
5. REMOVE FLARED-END SECTION
6. REMOVE CULVERT AND FLARED-END SECTIONS
7. CLEAR AND GRUB TREES PER TREE PRESERVATION PLAN
8. REMOVE YELLOW CROSS HATCHING AND STRIPING
9. REMOVE 22 LF DOUBLE YELLOW STRIPING
10. REMOVE 22 LF SOLID WHITE STRIPING

LEGEND

- 830 — EXISTING CONTOUR
- EXISTING BUILDING
- EXISTING CURB & GUTTER
- EXISTING STORM SEWER
- EXISTING SANITARY SEWER
- EXISTING WATERMAIN
- EXISTING CONCRETE PAVEMENT
- EXISTING FENCE
- EXISTING SIGN
- EXISTING HYDRANT
- EXISTING STORM MANHOLE
- EXISTING SANITARY MANHOLE
- EXISTING FES
- EXISTING CATCH BASIN
- REMOVE CURB & GUTTER
- REMOVE BITUMINOUS PAVEMENT
- REMOVE TREE (VERIFY WITH TREE PRESERVATION PLAN)
- SAWCUT PAVEMENT

SCALE IN FEET: 0 30 60

DESIGNED BY: JAP
DRAWN BY: ABL
CHECKED BY: GRP

I HEREBY CERTIFY THAT THIS PLAN, SPECIFICATION, OR REPORT WAS PREPARED BY ME OR UNDER MY DIRECT SUPERVISION AND THAT I AM A DULY LICENSED PROFESSIONAL ENGINEER UNDER THE LAWS OF THE STATE OF MINNESOTA.

JEFFREY A. PRASCH, P.E.
DATE: 12.07.21 LIC. NO.: 52706

REVISIONS	
02.21.22	CITY COMMENTS
04.21.22	CITY COMMENTS
05.25.22	CITY COMMENTS

DEMARC
LAND SURVEYING & ENGINEERING
7601 73RD AVENUE N, BROOKLYN PARK, MN 55428
PHONE: 763.560.3093 FAX: 763.560.3522
www.Demarcinc.com

TCO DESIGN
P.O. BOX 41790
PLYMOUTH, MINNESOTA 55441
763.424.3676

CANTISSIMO OF CHASKA
XXX HUNDERTMARK ROAD
CHASKA, MINNESOTA

EXISTING CONDITIONS & REMOVALS

PROJECT: 89556
SHEET NO. C7 OF C12

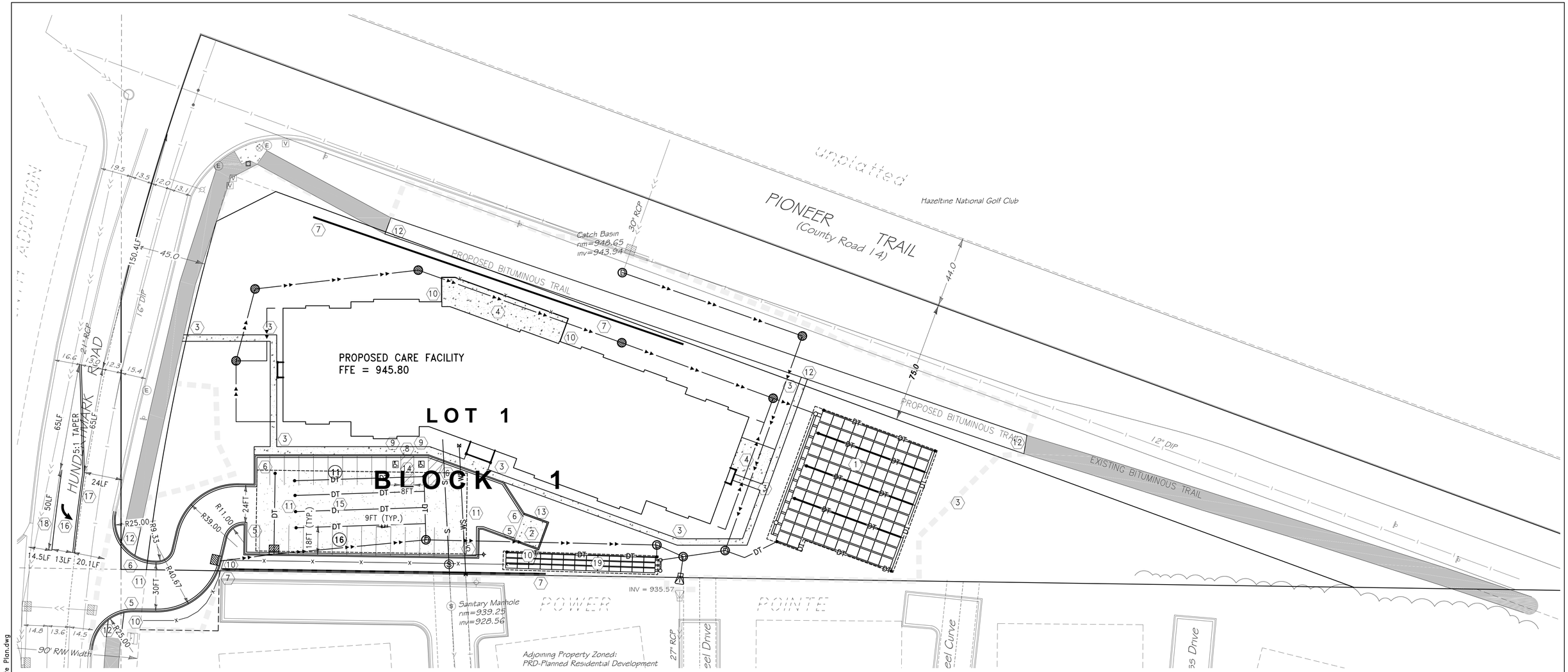

REFERENCE NOTES:

1. UNDERGROUND STORMTECH MC-3500 SYSTEM PER DETAILS ON C5
2. CONCRETE PAVEMENT PER 5/C2 and 6/C2
3. CONCRETE SIDEWALK PER 4/C2 and 6/C2
4. CONCRETE PATIO PER 4/C2 and 6/C2
5. B612 CURB & GUTTER PER 1/C2
6. B612 TIPOUT CURB & GUTTER PER 1/C2
7. MAXIMUM 4 FT HIGH WALL PER 8/C2 (BLOCK OR APPROVED EQUAL)
8. PED RAMP PER 9/C2 MEETING ADA REQUIREMENTS
9. HANDICAP SIGN AT EACH HANDICAP STALL (2 TOTAL) PER 10/C2
10. FENCE (SEE ARCHITECTURAL PLANS)
11. BITUMINOUS PAVEMENT PER 2/C2
12. BITUMINOUS PATH PER 3/C2
13. TRASH ENCLOSURE (SEE ARCHITECTURAL PLANS FOR DIMENSIONS)
14. 8 FT WIDE PAINTED ACCESS AISLE 45° 4 INCH WHITE CROSS HATCHING WITH NO PARKING SIGN
15. UNDERGROUND FILTRATION PER 1/C4
16. LEFT TURN ARROW
17. 116 LF 4" EPOXY DOUBLE YELLOW LINE
18. 50 LF 4" EPOXY SOLID WHITE LINE
19. UNDERGROUND STORMTECH SC-310 SYSTEM PER DETAILS ON C6

SITE DATA:

LOT AREA = 2.71 ACRES
DISTURBED AREA = 2.28 ACRES
EXISTING IMPERVIOUS AREA = 0.22 ACRES
PROPOSED IMPERVIOUS AREA = 1.13 ACRES
BUILDING COVERAGE = 0.51 ACRES = 19%
PROPOSED PARKING STALLS = 27 (INCLUDES 2 HANDICAP)

LEGEND

- EXISTING BUILDING
- EXISTING CURB & GUTTER
- PROPOSED CURB & GUTTER
- PROPOSED TIPOUT CURB & GUTTER
- EXISTING STORM SEWER
- PROPOSED STORM SEWER
- EXISTING CONCRETE
- PROPOSED CONCRETE
- BITUMINOUS PAVEMENT
- PROPOSED FENCE
- EXISTING SIGN
- PROPOSED PARKING STRIPE
- NUMBER OF PARKING STALLS

0 30 60
SCALE IN FEET

DESIGNED BY:	JAP
DRAWN BY:	ABL
CHECKED BY:	GRP

I HEREBY CERTIFY THAT THIS PLAN, SPECIFICATION, OR REPORT WAS PREPARED BY ME OR UNDER MY DIRECT SUPERVISION AND THAT I AM A DULY LICENSED PROFESSIONAL ENGINEER UNDER THE LAWS OF THE STATE OF MINNESOTA.

JEFFREY A. PRASCH, P.E.

DATE: 12.07.21 LIC. NO.: 52706

	REVISIONS
02.21.22	CITY COMMENTS
03.22.22	CITY COMMENTS
04.21.22	CITY COMMENTS
05.25.22	CITY COMMENTS

DEMARC
LAND SURVEYING & ENGINEERING
7601 73RD AVENUE N, BROOKLYN PARK, MN 55428
PHONE: 763.560.3093 FAX: 763.560.3522
www.DemarcInc.com

TCO DESIGN
P.O. BOX 41790
PLYMOUTH, MINNESOTA 55441
763.424.3676

CANTISSIMO OF CHASKA
XXX HUNDERTMARK ROAD
CHASKA, MINNESOTA

SITE PLAN

PROJECT: 89556
SHEET NO. C8 OF C12

\\survey\28-116-23\chaska assisted living\02 engineering - 89556\01 CAD\05 Sheet Files\04 Site Plan.dwg

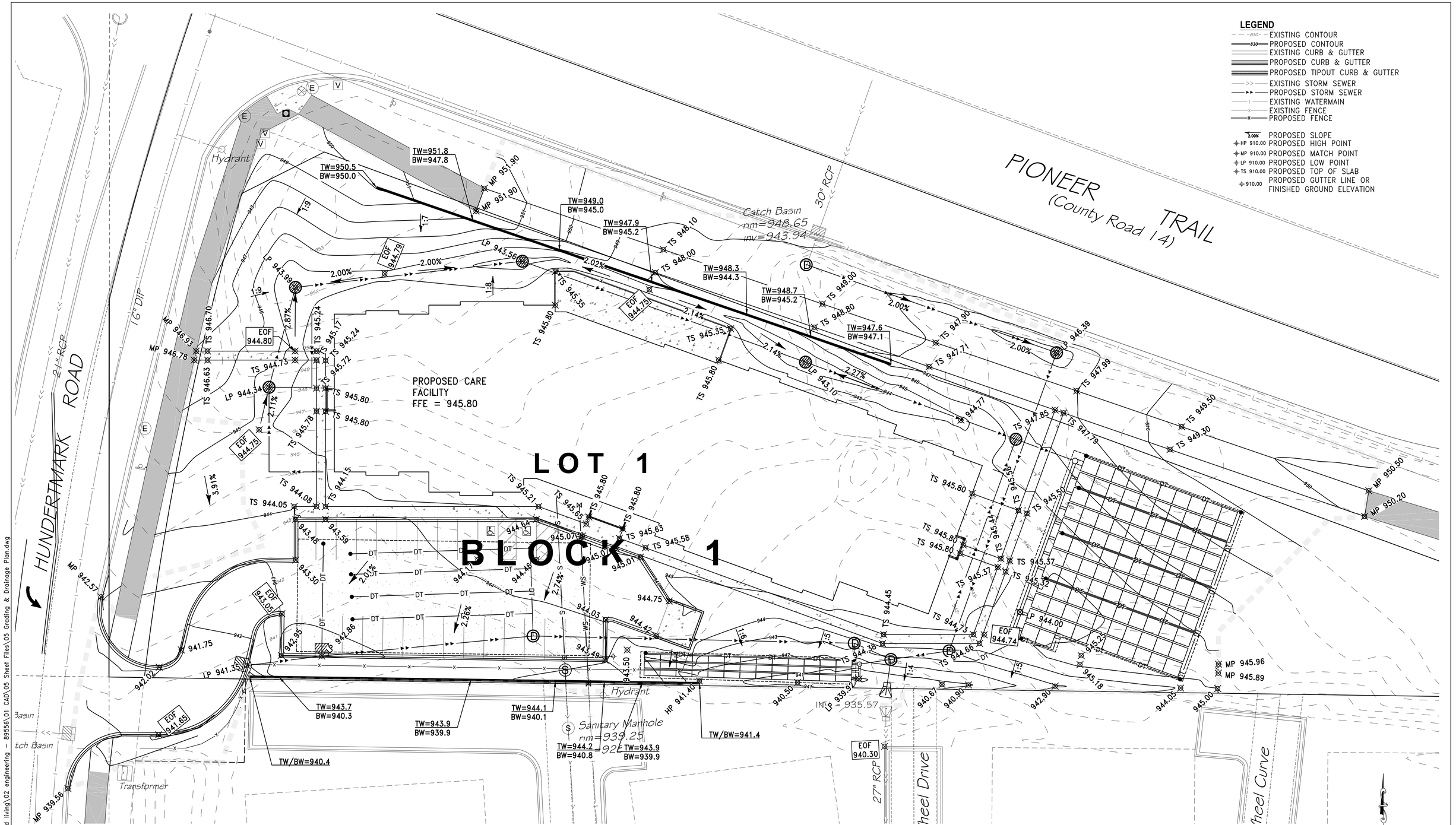
LEGEND
EXISTING CONTOUR
PROPOSED CONTOUR
EXISTING CURB & GUTTER
PROPOSED CURB & GUTTER
PROPOSED TIPOUT CURB & GUTTER
EXISTING STORM SEWER
PROPOSED STORM SEWER
EXISTING WATERMAIN
EXISTING FENCE
PROPOSED FENCE
2.00% PROPOSED SLOPE
HP 910.00 PROPOSED HIGH POINT
MP 910.00 PROPOSED MATCH POINT
LP 910.00 PROPOSED LOW POINT
TS 910.00 PROPOSED TOP OF SLAB
910.00 PROPOSED GUTTER LINE OR FINISHED GROUND ELEVATION
PIONEER TRAIL
(County Road 14)
HUNDERTMARK ROAD
LOT 1
BLOCK 1
PROPOSED CARE FACILITY
FFE = 945.80
Catch Basin
rim=948.65
inv=943.94
30" RCP
16" DIP
24" RCP
Hydrant
Transformer
Sanitary Manhole
rim=939.25
INV = 935.57
27" RCP
TW=951.8
BW=947.8
TW=950.5
BW=950.0
TW=949.0
BW=945.0
TW=947.9
BW=945.2
TW=948.3
BW=944.3
TW=948.7
BW=945.2
TW=947.6
BW=947.1
TW=943.7
BW=940.3
TW=943.9
BW=939.9
TW=944.1
BW=940.1
TW=944.2
BW=940.8
TW=943.9
BW=939.9
TW/BW=940.4
TW/BW=941.4
EOF 944.79
EOF 944.80
EOF 944.75
EOF 943.35
EOF 941.65
EOF 944.74
EOF 940.30
HP 941.40
LP 941.35
LP 943.56
LP 943.99
LP 944.34
LP 943.10
LP 939.92
LP 944.00
LP 946.39
MP 946.91
MP 946.78
MP 946.63
MP 942.57
MP 939.56
MP 951.90
MP 951.90
MP 950.50
MP 950.20
MP 945.96
MP 945.89
1:9
1:7
1:8
1:5
1:4
2.00%
2.02%
2.14%
2.27%
2.87%
2.11%
3.91%
2.01%
2.74%
2.26%
TS 946.70
TS 945.24
TS 945.17
TS 945.24
TS 945.72
TS 944.73
TS 945.80
TS 945.80
TS 945.78
TS 944.15
TS 944.08
TS 944.05
TS 945.80
TS 945.80
TS 945.63
TS 945.58
TS 945.21
TS 945.80
TS 945.65
TS 945.80
TS 945.80
TS 945.80

REFERENCE NOTES:
1. CONSTRUCT MANHOLE OVER EXISTING STORM SEWER.
2. SUMP MANHOLE
3. EXISTING UTILITIES APPROXIMATE LOCATION PER PLAN (FIELD VERIFY).
4. F&I ENVIROHOOD OR APPROVED EQUAL ON OUTLET PIPE INSIDE STRUCTURE.
5. CONSTRUCT PRIVATE MONITORING MANHOLE OVER EXISTING SANITARY SEWER STUB.
6. UNDERGROUND STORMTECH SC-310 SYSTEM (30 CHAMBERS) PER DETAILS ON SHEET C6.
7. UNDERGROUND STORMTECH MC-3500 SYSTEM (114 CHAMBERS) PER DETAILS ON SHEET C5.
8. CONNECT TO ROOF DRAIN (VERIFY WITH ARCHITECTURAL PLANS).
9. NYOPLAST CATCH BASIN AND CASTING PER DETAILS ON SHEET C4.
10. CLEANOUT, INV = 937.15
11. 12LF 6" SOLID DRAINTILE @ 0.2%
12. 8"X6" TEE, 12 LF 6" DIP CL 52, GATE VALVE, AND HYDRANT

EX. HYDRANT
Hydrant
16" DIP
24" RCP
HUNDERTMARK ROAD
30" RCP
Catch Basin rim=948.65 inv=943.94
TRAIL (County Road 14)
① STMH 100
72" DIA (R-4342)
RIM = 948.75
EX 30" INV(NE) = 943.47 (FIELD VERIFY)
30" INV(SE) = 943.40
CB 101
60" DIA (R-4342)
RIM = 946.39
30" INV(NW) = 941.63
30" INV(SW) = 936.41
CB 102
48" DIA (R-4342)
RIM = 943.71
10" INV(SW) = 940.53
15" INV(NW,SE) = 940.13
⑨ CB 113 (STANDARD)
RIM = 947.10
15" INV(NW) = 940.00
15" INV(SW) = 940.00
24" INV(SE) = 938.05
SUMP = 934.05
CB 104
48" DIA (R-4342)
RIM = 943.56
12" INV(SE,W) = 941.31
CB 105
48" DIA (R-4342)
RIM = 943.99
12" INV(S,E) = 941.72
102 LF 12" HDPE @ 0.40%
134 LF 12" HDPE @ 0.40%
118 LF 30" HDPE @ 1.50%
46 LF 12" HDPE @ 0.40%
⑧ 62 LF 8" PVC SCH 40 @ 1.00% MIN. WITH (2) 90° BENDS
CB 106
48" DIA (R-4342)
RIM = 944.34
12" INV(N) = 941.90
8" INV(E,S) = 942.17
67 LF 8" PVC SCH 40 @ 1.00% MIN. WITH 90° BEND
PROPOSED CARE FACILITY
FFE = 945.80
CB 103
48" DIA (R-4342)
RIM = 943.71
12" INV(NW) = 940.77
15" INV(SE) = 940.57
100 LF 15" HDPE @ 0.44%
28 LF 15" HDPE @ 0.46%
16 LF 10" PVC SCH 40 @ 1.00% MIN.
10 LF 8" PVC SCH 40 @ 1.00% MIN.
8"x10" TEE
8"x10" INCREASER
CLEANOUT INV = 937.30
70 LF 6" PERFORATED DRAINTILE @ 0.0%
90° BEND WITH CLEANOUT INV = 937.30
6" TEE
79 LF 6" PERFORATED DRAINTILE @ 0.0%
6" TEE
⑨ CB 112 (STANDARD)
RIM = 944.00
15" INV(NE,SW,SE) = 940.00
SUMP = 936.00
90° BEND WITH CLEANOUT INV = 937.30
80 LF 6" PERFORATED DRAINTILE @ 0.0%
45° BEND WITH CLEANOUT INV = 937.30
35LF 6" SOLID DRAINTILE @ 0.1%
45° BEND
90° BEND
LOT 1
8" GATE VALVE
CLEANOUT INV = 937.19
CLEANOUT INV = 938.41
80 LF 6" PERFORATED DRAINTILE @ 0.0%
80 LF 6" PERFORATED DRAINTILE @ 0.0%
80 LF 6" PERFORATED DRAINTILE @ 0.0%
80 LF 6" PERFORATED DRAINTILE @ 0.0%
50 LF 12" PERFORATED DRAINTILE @ 0.60%
40 LF 12" PERFORATED DRAINTILE @ 0.10%
88 LF 6" PVC SDR 35 @ 2.00%
84 LF 8" DIP CL 52
STMH 109
60" DIA (R-1642)
RIM = 942.75
12" INV(NW) = 936.51
12" INV(W) = 939.04
30" INV(E,S) = 935.66
80 LF 8" PVC SCH 40 @ 1.00% MIN. WITH 90° BEND
26 LF 30" HDPE @ 0.44%
141 LF 30" HDPE @ 0.45%
18 LF 12" HDPE @ 0.40%
34 LF 12" HDPE @ 0.40%
94 LF 12" HDPE @ 0.40%
143 LF 12" HDPE @ 0.40%
93 LF 6" PERFORATED DRAINTILE @ 0.0%
CB 107
2'X3' (R-3067)
RIM = 941.35
12" INV(E) = 938.83
② ④ CB 108
48" DIA (R-3067)
RIM = 942.86
12" INV(W,N) = 938.69
12" INV(E) = 939.51
SUMP = 934.69
② STMH 114
48" DIA (R-1642)
RIM = 943.60
12" INV(W) = 939.13
12" INV(N,E) = 937.15
SUMP = 933.15
③ Hydrant
EX. HYDRANT
8" GATE VALVE
Sanitary Manhole rim=939.25 inv=928.56
⑤ SMH 200
48" DIA (R-1642)
RIM = 940.30
8" INV(S) = 928.69 (FIELD VERIFY)
8" INV(N) = 928.79
STMH 115
48" DIA (R-1642)
RIM = 943.50
6" INV(S) = 937.13
12" INV(W,E) = 936.58
INV = 935.57
⑨ CB 117 (SOLID)
RIM = 941.48
12" INV(E) = 939.10
8" INV(S,W) = 937.94
16 LF 30" RCP @ 0.44%
FES 111 INV=935.59
EX. FES INV=935.57 (FIELD VERIFY)
14 LF 12" HDPE @ 0.40%
⑨ CB 116 (STANDARD)
RIM = 939.92
12" INV(W) = 937.65
8" INV(N) = 937.94
SUMP = 933.65
STMH 110
60" DIA (R-1642)
RIM = 942.20
6" INV(E) = 937.26
30" INV(NE,SW) = 935.77
80 LF 6" PERFORATED DRAINTILE @ 0.0%
REPLACE CASTING WITH R-3290-A
Catch Basin
Catch Basin
Transformer
Drive

LEGEND

- EXISTING STORM SEWER
- EXISTING WATERMAIN
- EXISTING SANITARY SEWER
- PROPOSED STORM SEWER
- PROPOSED SANITARY SERVICE
- EXISTING HYDRANT
- EXISTING STORM MANHOLE
- EXISTING CATCH BASIN
- PROPOSED CATCH BASIN
- EXISTING SANITARY MANHOLE
- EXISTING FES
- PROPOSED FES

SCALE IN FEET 0 20 40

DESIGNED BY:	JAP
DRAWN BY:	ABL
CHECKED BY:	GRP

I HEREBY CERTIFY THAT THIS PLAN, SPECIFICATION, OR REPORT WAS PREPARED BY ME OR UNDER MY DIRECT SUPERVISION AND THAT I AM A DULY LICENSED PROFESSIONAL ENGINEER UNDER THE LAWS OF THE STATE OF MINNESOTA.

JEFFREY A. PRASCH, P.E.
DATE: 12.07.21 LIC. NO.: 52706

REVISIONS	
02.21.22	CITY COMMENTS
03.22.22	CITY COMMENTS
04.21.22	CITY COMMENTS
05.25.22	CITY COMMENTS

DEMARC
LAND SURVEYING & ENGINEERING
7601 73RD AVENUE N, BROOKLYN PARK, MN 55428
PHONE: 763.560.3093 FAX: 763.560.3522
www.Demarcinc.com

TCO DESIGN
P.O. BOX 41790
PLYMOUTH, MINNESOTA 55441
763.424.3676

CANTISSIMO OF CHASKA
XXX HUNDERTMARK ROAD
CHASKA, MINNESOTA

UTILITY PLAN

PROJECT: 89556
SHEET NO. C10 OF C12

J:\survey\28-116-23\chaska assisted living\02 engineering - 89556\01 CAD\05 Sheet Files\06 Utility Plan.dwg

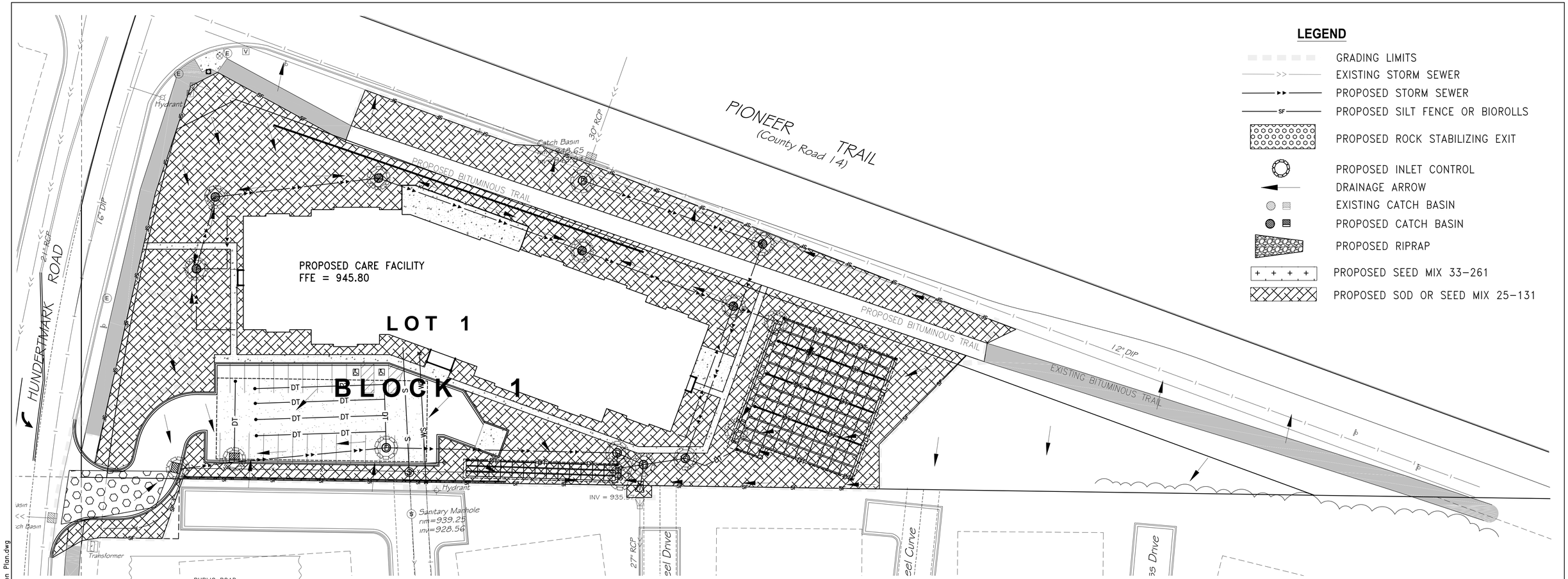

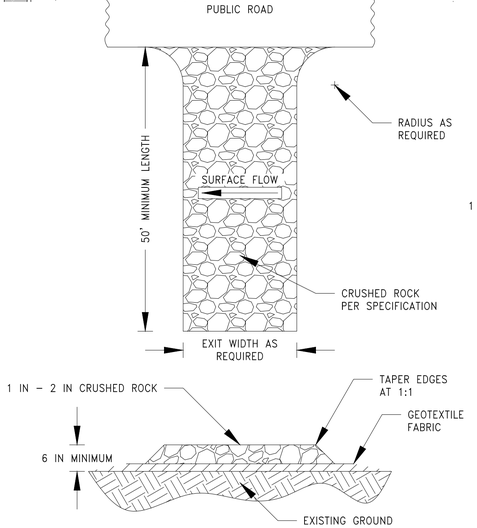

1 / C11 ROCK CONSTRUCTION EXIT
NOT TO SCALE

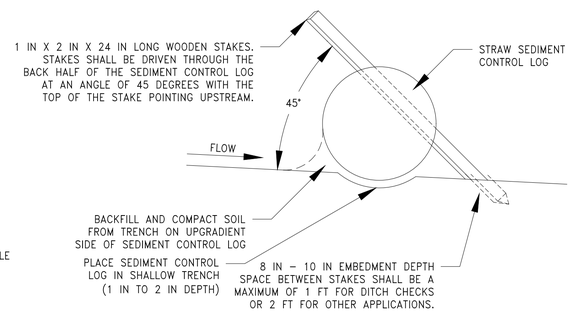

2 / C11 BIOROLLS
NOT TO SCALE

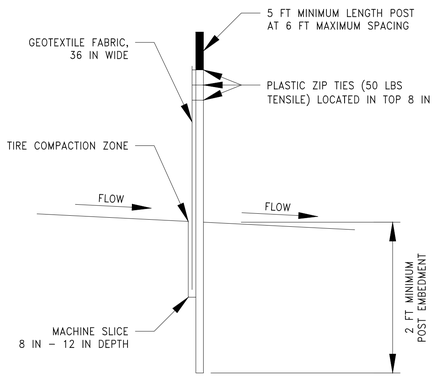

3 / C11 SILT FENCE (MACHINE SLICED)
NOT TO SCALE

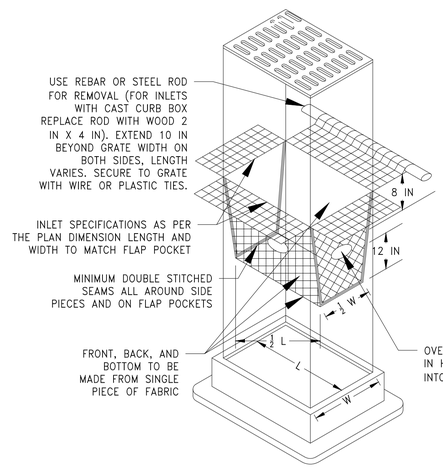

4 / C11 INLET PROTECTION
NOT TO SCALE

0 30 60
SCALE IN FEET

DESIGNED BY:	JAP	I HEREBY CERTIFY THAT THIS PLAN, SPECIFICATION, OR REPORT WAS PREPARED BY ME OR UNDER MY DIRECT SUPERVISION AND THAT I AM A DULY LICENSED PROFESSIONAL ENGINEER UNDER THE LAWS OF THE STATE OF MINNESOTA.	REVISIONS
DRAWN BY:	ABL		02.21.22 CITY COMMENTS
CHECKED BY:	GRP		03.22.22 CITY COMMENTS
		JEFFREY A. PRASCH, P.E.	04.21.22 CITY COMMENTS
		DATE: 12.07.21 LIC. NO.: 52706	

DEMARC
LAND SURVEYING & ENGINEERING
7601 73RD AVENUE N, BROOKLYN PARK, MN 55428
PHONE: 763.560.3093 FAX: 763.560.3522
www.Demarcinc.com

TCO DESIGN
P.O. BOX 41790
PLYMOUTH, MINNESOTA 55441
763.424.3676

CANTISSIMO OF CHASKA
XXX HUNDERTMARK ROAD
CHASKA, MINNESOTA

STORMWATER POLLUTION PREVENTION PLAN

PROJECT: 89556
SHEET NO. C11 OF C12

J:\survey\28-116-23\chaska assisted living\02 engineering - 89556\01 CAD\05 Sheet Files\07 Stormwater Pollution Prevention Plan.dwg

PROJECT INFORMATION:

DISTURBED AREA: 2.26 ACRES
EROSION CONTROL SUPERVISOR CONTACT: TBD
IMPAIRED WATERS WITHIN ONE (1) MILE THAT SITE DRAINS TO: NONE. THE SITE DRAINS TO A WETLAND AND THEN CONVEYED VIA A DITCH TOWARDS THE MINNESOTA RIVER. ALTHOUGH THERE ARE SEVERAL IMPAIRED WATERS WITHIN ONE (1) MILE OF THE SITE, THE STORMWATER RUNOFF DOES NOT DRAIN TO THEM.

AN ASSISTED LIVING AND MEMORY CARE FACILITY IS BEING PROPOSED AT THE CORNER OF PIONEER TRAIL AND HUNDERTMARK ROAD IN CHASKA, MINNESOTA. THE SITE IS ABOUT 2.71 ACRES IN TOTAL. MOST OF THE SITE IS GRASSY WITH SOME WOODED AREA. THERE IS AN EXISTING PAVED PATH THAT RUNS ALONG WEST AND NORTH OF THE SITE. THERE ARE EXISTING RESIDENCES DIRECTLY SOUTH OF THE SITE. CURRENTLY, MOST OF THE EXISTING STORMWATER SURFACE FLOWS TO THE PROPERTY TO THE SOUTH. A PORTION OF THE SITE DRAINS TO THE STREET. A SWALE THROUGH THE MIDDLE OF THE SITE CONVEYS STORMWATER FROM STORM SEWER OUTLET NORTH OF THE SITE AND FLOWS TO A LOW AREA JUST SOUTH OF THE SITE.
THE MAJORITY OF THE SITE WILL CONTINUE TO DRAIN TO THE PROPERTY TO THE SOUTH. THE STORMTECH MC-3500 WILL RECEIVE RUNOFF FROM THE PROPOSED BUILDING AND THE AREA NORTH OF THE PROPOSED BUILDING. THE STORMTECH SC-310 WILL RECEIVE RUNOFF FROM THE AREA SOUTH AND SOUTHEAST OF THE PROPOSED BUILDING. THE UNDERGROUND FILTRATION WILL RECEIVE RUNOFF FROM THE PARKING LOT AND SOME AREA NORTH AND SOUTH OF THE PARKING LOT. THE OFFSITE DRAINAGE FROM THE NORTH STORM SEWER OUTLET WILL BYPASS THE SITE THROUGH STORM SEWER AND CONTINUE TO DRAIN TO THE PROPERTY TO THE SOUTH. THERE ARE A COUPLE AREAS OF THE SITE (EAST AND NORTHWEST) THAT WILL REMAIN UNDISTURBED AND WILL CONTINUE THE SAME DRAINAGE PATTERNS AS EXISTING CONDITIONS.

KNOWLEDGEABLE PERSON/CHAIN OF RESPONSIBILITY

THE CONTRACTOR SHALL IDENTIFY A PERSON KNOWLEDGEABLE AND EXPERIENCED IN THE APPLICATION OF EROSION PREVENTION AND SEDIMENT CONTROL BMPS WHO WILL OVERSEE THE IMPLEMENTATION OF THE SWPPP, INCLUDING: INSTALLATION, INSPECTION AND MAINTENANCE OF THE EROSION PREVENTION AND SEDIMENT CONTROL BMPS. THE GENERAL CONTRACTOR SHALL ATTACH CONTACT INFORMATION TO THE SWPPP PRIOR TO THE START OF ANY CONSTRUCTION ACTIVITY.

THE CONTRACTOR SHALL ESTABLISH A CHAIN OF RESPONSIBILITY FOR ALL CONTRACTORS AND SUB-CONTRACTORS ON SITE TO ENSURE THE SWPPP IS BEING PROPERLY IMPLEMENTED AND MAINTAINED. THE CONTRACTOR SHALL PROVIDE THE CHAIN OF RESPONSIBILITY TO THE OWNER AND ATTACH TO THE SWPPP PRIOR TO ANY CONSTRUCTION ACTIVITY.

STORMWATER POLLUTION PREVENTION PLAN NOTES:

1. PRIOR TO ANY CONSTRUCTION ACTIVITIES, THE CONTRACTOR SHALL ACQUIRE THE NECESSARY MPCA NPDES CONSTRUCTION STORM WATER PERMIT.
2. ALL EROSION AND SEDIMENT CONTROL BMP'S SHALL BE INSTALLED PRIOR TO STARTING ANY CONSTRUCTION ACTIVITIES. BMP'S SHALL BE MAINTAINED UNTIL ALL DISTURBED AREAS HAVE BEEN PERMANENTLY STABILIZED.
3. THE CONTRACTOR IS RESPONSIBLE FOR ALL EROSION PREVENTION AND SEDIMENT CONTROL MEASURES FOR THE PROJECT.
4. EROSION PREVENTION AND SEDIMENT CONTROL MEASURES SHOWN ON THE PLANS ARE THE ABSOLUTE MINIMUM REQUIREMENTS. THE CONTRACTOR SHALL IMPLEMENT ADDITIONAL MEASURES AS NECESSARY TO PROPERLY MANAGE THE PROJECT AREA.
5. THE CONTRACTOR SHALL KEEP THE SWPPP, INCLUDING ALL AMENDMENTS AND INSPECTION AND MAINTENANCE RECORDS ON SITE DURING CONSTRUCTION.
6. THE CONTRACTOR SHALL DOCUMENT AMENDMENTS TO THE SWPPP AS A RESULT OF INSPECTION(S) WITHIN 7 DAYS.
7. THE CONTRACTOR SHALL FILE A NOTICE OF TERMINATION WITHIN THIRTY (30) DAYS OF ACHIEVING PERMANENT STABILIZATION.
8. THE CONTRACTOR SHALL SCHEDULE THEIR OPERATION TO MINIMIZE THE AMOUNT OF DISTURBED AREA AT ANY GIVEN TIME.
9. THE INFILTRATION AREAS SHALL BE PROTECTED AND HAVE RIGOROUS EROSION AND SEDIMENT CONTROLS IF GRADED WITHIN 3 FEET OF THE FINAL GRADES. THE CONTROLS SHALL KEEP RUNOFF COMPLETELY AWAY FROM THE INFILTRATION AREAS UNTIL FINAL STABILIZATION IS COMPLETE.
10. STABILIZE AREAS THAT ARE WITHIN 200 FEET OF AND DRAIN TO PUBLIC WATER WITHIN 24 HOURS DURING FISH SPAWNING TIMES.
11. WATER SHALL BE USED, IF NECESSARY, FOR DUST CONTROL.
12. ALL EROSION CONTROL SHALL CONFORM TO THE MNDOT EROSION CONTROL HANDBOOK.
13. INLET PROTECTION SHALL BE INSTALLED AT ANY INLET THAT MAY RECEIVE RUNOFF FROM THE DISTURBED AREAS OF THE PROJECT. IF A SPECIFIC SAFETY CONCERN HAS BEEN IDENTIFIED, WRITTEN AUTHORIZATION MUST BE RECEIVED BY THE CITY ENGINEER IN ORDER TO REMOVE THAT PARTICULAR INLET CONTROL.
14. ALL EXPOSED SOILS, INCLUDING STOCKPILES, SHALL BE TEMPORARILY STABILIZED PER MNDOT SPECIFICATION 2575 WITHIN 7 DAYS AFTER CONSTRUCTION ACTIVITY HAS TEMPORARILY CEASED. STABILIZATION OF ALL EXPOSED AREAS MUST BE INITIATED IMMEDIATELY.
15. STOCKPILES SHALL NOT BE PLACED ON ROADS, DRIVEWAYS, SURFACE WATERS OR SWALES. EFFECTIVE SEDIMENT CONTROL SHALL BE INSTALLED IMMEDIATELY AROUND ALL SOIL STOCKPILES.
16. REMOVE ALL SOILS AND SEDIMENT TRACKED OR OTHERWISE DEPOSITED ONTO PUBLIC ROADS OR PRIVATE DRIVEWAYS ON A DAILY BASIS OR AS NEEDED.
17. THE NORMAL WETTED PERIMETER WITHIN 200 LINEAL FEET OF ANY PROJECT DISCHARGE LOCATION SHALL BE STABILIZED WITHIN 24 HOURS OF CONNECTING TO THE DISCHARGE LOCATION.
18. IF DEWATERING IS NECESSARY, THE CONTRACTOR IS RESPONSIBLE FOR ADHERING TO ALL DEWATERING AND SURFACE DRAINAGE REGULATIONS. THE APPROPRIATE PERMITS SHALL BE ACQUIRED PRIOR TO COMMENCING DEWATERING ACTIVITIES.
19. TURBID AND SEDIMENT-LADEN WATERS SHALL BE DIRECTED TO A TEMPORARY SEDIMENT POND PRIOR TO DISCHARGING. A VISUAL CHECK SHALL BE CONDUCTED PRIOR TO DISCHARGING TREATED WATER FROM THE SEDIMENT POND TO ENSURE NUISANCE CONDITIONS WILL NOT RESULT FROM THE DISCHARGE.
20. ALL EROSION AND SEDIMENT CONTROL DEVICES SHALL BE REMOVED FROM THE SITE WITHIN THIRTY (30) DAYS AFTER PERMANENT STABILIZATION HAS BEEN ACHIEVED.
21. THE CORRECTIVE ACTION MUST BE COMPLETED BY THE NEXT BUSINESS DAY AFTER DISCOVERY WHEN PERIMETER CONTROL DEVICES BECOME NONFUNCTIONAL OR THE SEDIMENT REACHES ONE-HALF (1/2) THE HEIGHT OF THE DEVICE.
22. PERMITEE MUST MINIMIZE SOIL COMPACTION. METHODS OF MINIMIZING SOIL COMPACTION INCLUDE THE USE OF TRACKED EQUIPMENT AND STAYING OFF AREAS TO BE LEFT UNCOMPACTED. AREAS OF COMPACTED SOIL WILL BE REMOVED OR LOOSENED VIA TILLING TO A DEPTH OF NO LESS THAN 18 INCHES.
23. SECTIONS 5.11-5.16, 5.18, & 5.22 OF THE 2018 CONSTRUCTION STORMWATER GENERAL PERMIT DO NOT APPLY.

TRAINING DOCUMENTATION:

SWPPP DESIGNER: JEFF PRASCH (DEMARC LAND SURVEYING & ENGINEERING) - "DESIGN OF CONSTRUCTION SWPPP" TRAINING EXPIRES MAY 31, 2023.

THE CONTRACTOR (OPERATOR) SHALL ADD TO THE SWPPP TRAINING RECORDS FOR THE FOLLOWING PERSONNEL:
- INDIVIDUALS OVERSEEING THE IMPLEMENTATION OF, REVISING, AND AMENDING THE SWPPP
- INDIVIDUALS PERFORMING INSPECTIONS
- INDIVIDUALS PERFORMING OR SUPERVISING THE INSTALLATION, MAINTENANCE AND REPAIR OF BMPS

EXPECTED SEQUENCE OF CONSTRUCTION

1. INSTALL ROCK STABILIZING EXIT(S), PERIMETER CONTROL, INLET CONTROL, AND STABILIZE DOWN GRADIENT BOUNDARIES.
2. COMPLETE SITE GRADING.
3. APPLY EARLY APPLICATION OF BASE COURSE ON PARKING SECTION.
4. INSTALL CURB AND GUTTER, AND PAVING.
5. GRADE BIOFILTRATION BASIN.
6. COMPLETE FINAL GRADING AND PERMANENT STABILIZATION.
7. CONSTRUCT BUILDING.
8. REMOVE EROSION AND SEDIMENT CONTROL BMPs AFTER PERMANENT STABILIZATION IS ACHIEVED.

TEMPORARY SEDIMENT BASINS

1. THE CONTRACTOR SHALL INSTALL SEDIMENT BASIN(S) REQUIRED BY THE NPDES CONSTRUCTION PERMIT IF FIVE (5) OR MORE DISTURBED ACRES DISCHARGE TO A COMMON LOCATION.
2. TEMPORARY SEDIMENT BASIN OUTLETS SHALL BE CONSTRUCTED TO PREVENT SHORT-CIRCUITING AND PREVENT THE DISCHARGE OF FLOATING DEBRIS.
3. BASINS MUST HAVE THE ABILITY TO ALLOW COMPLETE DRAWDOWN, INCLUDE A STABILIZED EMERGENCY OVERFLOW, WITHDRAW WATER FROM THE SURFACE, AND PROVIDE ENERGY DISSIPATION AT THE OUTLET.
4. TEMPORARY SEDIMENT BASINS SHALL BE PROVIDED WITH ENERGY DISSIPATION AT ANY BASIN OUTLET TO PREVENT SOIL EROSION.
5. SEDIMENT BASINS MUST BE SITUATED OUTSIDE OF SURFACE WATERS AND ANY BUFFER ZONES, AND MUST BE DESIGNED TO AVOID THE DRAINING WATER FROM WETLANDS.
6. BASINS SHALL BE SIZED ACCORDING TO THE CONSTRUCTION STORMWATER GENERAL PERMIT REQUIREMENTS. CALCULATIONS SHALL BE PROVIDED WITH THE SWPPP.
7. SEDIMENT BASINS SHALL NOT BE PLACED IN FUTURE INFILTRATION AREAS.
8. SEDIMENT BASINS SHALL BE DRAINED AND SEDIMENT REMOVED WHEN IT REACHES ½ THE STORAGE VOLUME WITHIN 72 HOURS.

INSPECTIONS AND MAINTENANCE

1. ALL INSPECTIONS, MAINTENANCE, REPAIRS, REPLACEMENTS AND REMOVAL OF BMPS SHALL BE CONSIDERED INCIDENTAL TO THE BMP BID ITEMS.
2. THE CONTRACTOR SHALL COMPLETE SITE INSPECTIONS, AND BMP MAINTENANCE TO ENSURE COMPLIANCE WITH THE PERMIT REQUIREMENTS.
3. THE CONTRACTOR SHALL PROVIDE A TRAINED PERSON TO INSPECT THE ENTIRE CONSTRUCTION SITE AT LEAST ONCE EVERY SEVEN (7) DAYS DURING ACTIVE CONSTRUCTION AND WITHIN 24 HOURS AFTER A RAINFALL EVENT GREATER THAN 0.5 INCHES IN 24 HOURS. ALL INSPECTIONS MUST BE RECORDED IN WRITING WITHIN 24 HOURS OF CONDUCTING THE INSPECTIONS AND THE RECORDS MUST BE RETAINED WITH THE SWPPP. IF ANY DISCHARGE FROM THE SITE IS OBSERVED THE DISCHARGE MUST BE DESCRIBED AND PHOTOGRAPHED.
4. TEMPORARY AND PERMANENT SEDIMENT BASINS SHALL BE DRAINED AND THE SEDIMENT REMOVED WHEN THE DEPTH OF SEDIMENT COLLECTED IN THE BASIN REACHES ½ THE STORAGE VOLUME. DRAINAGE AND REMOVAL MUST BE COMPLETED WITHIN 72 HOURS OF DISCOVERY.
5. IF SEDIMENT ESCAPES THE CONSTRUCTION SITE, OFF-SITE ACCUMULATIONS OF SEDIMENT MUST BE REMOVED IN A MANOR AND AT A FREQUENCY SUFFICIENT TO MINIMIZE OFF-SITE IMPACTS.

POLLUTION PREVENTION MANAGEMENT MEASURES

1. THE CONTRACTOR SHALL BE RESPONSIBLE FOR ALL POLLUTION PREVENTION MANAGEMENT MEASURES.
2. ALL POLLUTION PREVENTION MEASURES ARE CONSIDERED INCIDENTAL TO THE BMP BID ITEMS, UNLESS OTHERWISE NOTED.
3. THE CONTRACTOR IS RESPONSIBLE FOR INFORMING ALL VISITORS AND/OR PERSONNEL ON-SITE OF THE POLLUTION PREVENTION MANAGEMENT MEASURES. POLLUTION PREVENTION MANAGEMENT MEASURES INCLUDE BUT ARE NOT LIMITED TO THE FOLLOWING:
   A. SOLID WASTE SUCH AS COLLECTED SEDIMENT, ASPHALT AND CONCRETE MILLINGS, CEMENT PRODUCT WASTE, FLOATING DEBRIS, PAPER, PLASTIC, CONSTRUCTION DEBRIS AND OTHER WASTES MUST BE DISPOSED OF PROPERLY OFF SITE.
   B. HAZARDOUS WASTES SUCH AS OILS, GASOLINE, PAINT, CEMENT BASED PRODUCTS, ETC. SHALL BE PROPERLY STORED WITH SECONDARY CONTAINMENT TO PREVENT SPILLS, LEAKS OR OTHER DISCHARGES. IF STORED ON THE PROJECT SITE, THEY SHALL BE STORED IN RESTRICTED ACCESS AREAS TO PROTECT AGAINST VANDALISM. STORAGE AND DISPOSAL SHALL BE IN COMPLIANCE WITH THE MPCA.
   C. CEMENT BASED PRODUCT WASHOUTS ARE NOT PERMITTED ON SITE.
   D. THE CONTRACTOR SHALL INCLUDE SPILL KITS WITH ALL FUELING SOURCES AND MAINTENANCE ACTIVITIES. SECONDARY CONTAINMENT MEASURES SHALL BE INSTALLED AND MAINTAINED BY THE CONTRACTOR.
   E. THE CONTRACTOR SHALL ENSURE SPILLS ARE CONTAINED AND CLEANED UP IMMEDIATELY UPON DISCOVERY. SPILLS LARGE ENOUGH TO REACH THE STORMWATER CONVEYANCE SYSTEM SHALL BE REPORTED TO THE MINNESOTA DUTY OFFICER AT 1.800.422.0798.

FINAL STABILIZATION

1. THE CONTRACTOR IS RESPONSIBLE FOR ENSURING FINAL STABILIZATION OF THE ENTIRE SITE. FINAL STABILIZATION SHALL BE COMPLETED PER THE LANDSCAPE PLAN:
   A. COMPLETION OF ALL CONSTRUCTION ACTIVITY.
   B. INSTALLATION OF PERMANENT COVER OVER ALL AREAS PRIOR TO SUBMITTING THE NOTICE OF TERMINATION. PERMANENT COVER SHALL CONSIST OF 12 INCHES TOPSOIL, AND SOD, UNLESS OTHERWISE SPECIFIED.
   C. VEGETATIVE COVER MUST CONSIST OF A UNIFORM PERENNIAL VEGETATION WITH A DENSITY OF 70 PERCENT OF ITS EXPECTED FINAL GROWTH. VEGETATION IS NOT REQUIRED WHERE THE FUNCTION OF A SPECIFIC AREA DICTATES NO VEGETATION, SUCH AS IMPERVIOUS SURFACES OR LANDSCAPED AREAS. SEE LANDSCAPE PLAN FOR PERMANENT VEGETATION SCHEDULE.
   D. CLEAN THE PERMANENT STORMWATER TREATMENT SYSTEMS OF ANY ACCUMULATED SEDIMENT AND MUST ENSURE THE SYSTEM MEETS ALL APPLICABLE REQUIREMENTS AND IS OPERATING AS DESIGNED.
   E. REMOVAL OF ALL SEDIMENT FROM CONVEYANCE SYSTEMS.
   F. REMOVAL OF ALL TEMPORARY SYNTHETIC EROSION PREVENTION AND SEDIMENT CONTROL BMPs.
   G. FINAL STABILIZATION SHALL BE PERFORMED IN ACCORDANCE WITH MNDOT 2018 SPECIFICATION 2575.

ESTIMATED EROSION CONTROL QUANTITIES	
SILT FENCE	1600 LF
STABILIZED ROCK EXIT	1 EACH
STORM DRAIN INLET PROTECTION	17 EACH
SOD OR SEED MIX 25-131	1.26 ACRES

DESIGNED BY: JAP
DRAWN BY: ABL
CHECKED BY: GRP

I HEREBY CERTIFY THAT THIS PLAN, SPECIFICATION, OR REPORT WAS PREPARED BY ME OR UNDER MY DIRECT SUPERVISION AND THAT I AM A DULY LICENSED PROFESSIONAL ENGINEER UNDER THE LAWS OF THE STATE OF MINNESOTA.

JEFFREY A. PRASCH, P.E.
DATE: 12.07.21 LIC. NO.: 52706

REVISIONS	
02.21.22	CITY COMMENTS
03.22.22	CITY COMMENTS
04.21.22	CITY COMMENTS

DEMARC
LAND SURVEYING & ENGINEERING
7601 73RD AVENUE N, BROOKLYN PARK, MN 55428
PHONE: 763.560.3093 FAX: 763.560.3522
www.DemarcInc.com

TCO DESIGN
P.O. BOX 41790
PLYMOUTH, MINNESOTA 55441
763.424.3676

CANTISSIMO OF CHASKA
XXX HUNDERTMARK ROAD
CHASKA, MINNESOTA

STORMWATER POLLUTION PREVENTION PLAN NOTES

PROJECT: 89556
SHEET NO. C12 OF C12

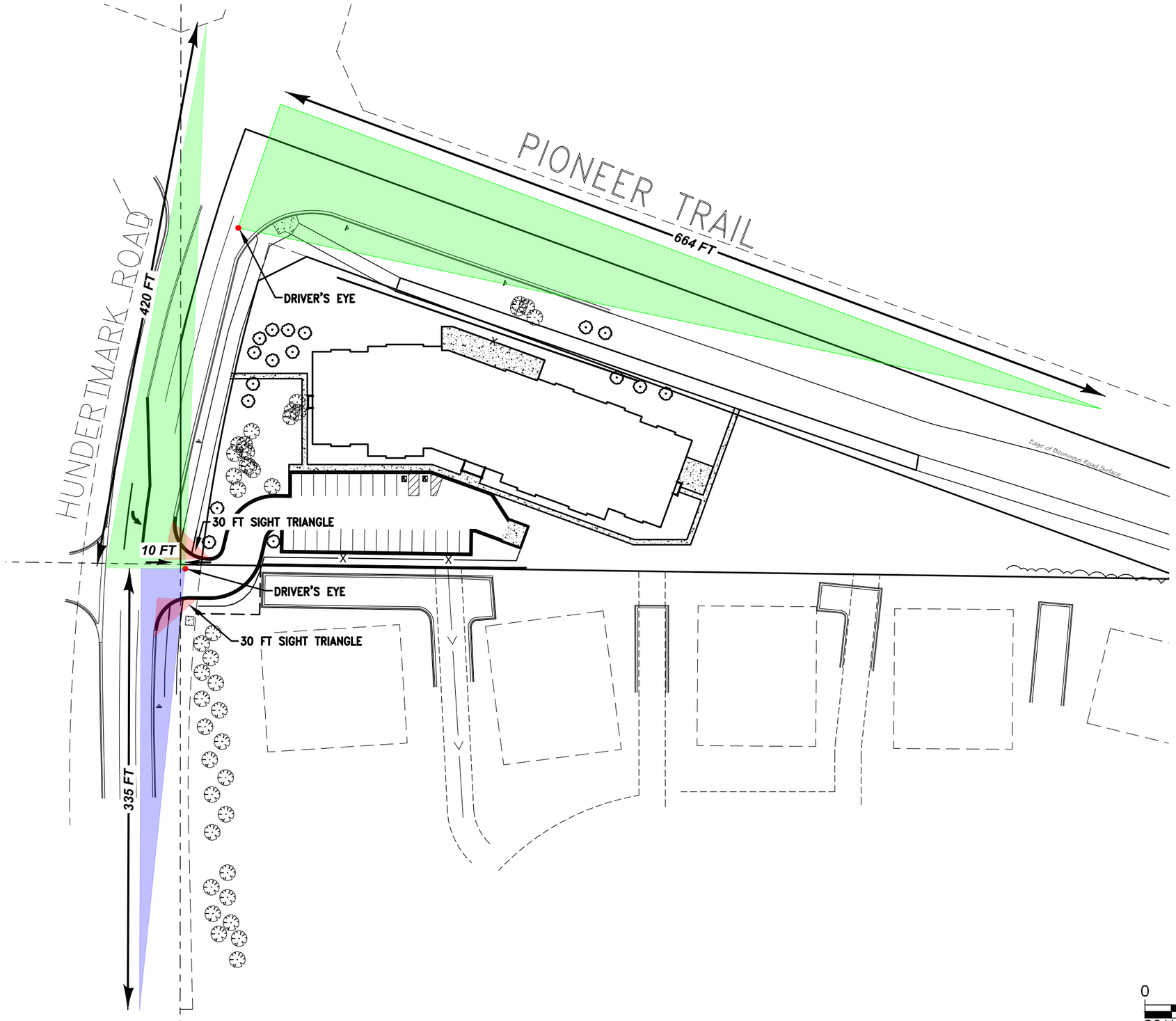

DEMARC
LAND SURVEYING & ENGINEERING

CANTISSIMO OF CHASKA
XXX HUNDERTMARK ROAD
CHASKA, MN

SIGHT DISTANCE EXHIBIT

05.25.2022

0 80 160
SCALE IN FEET

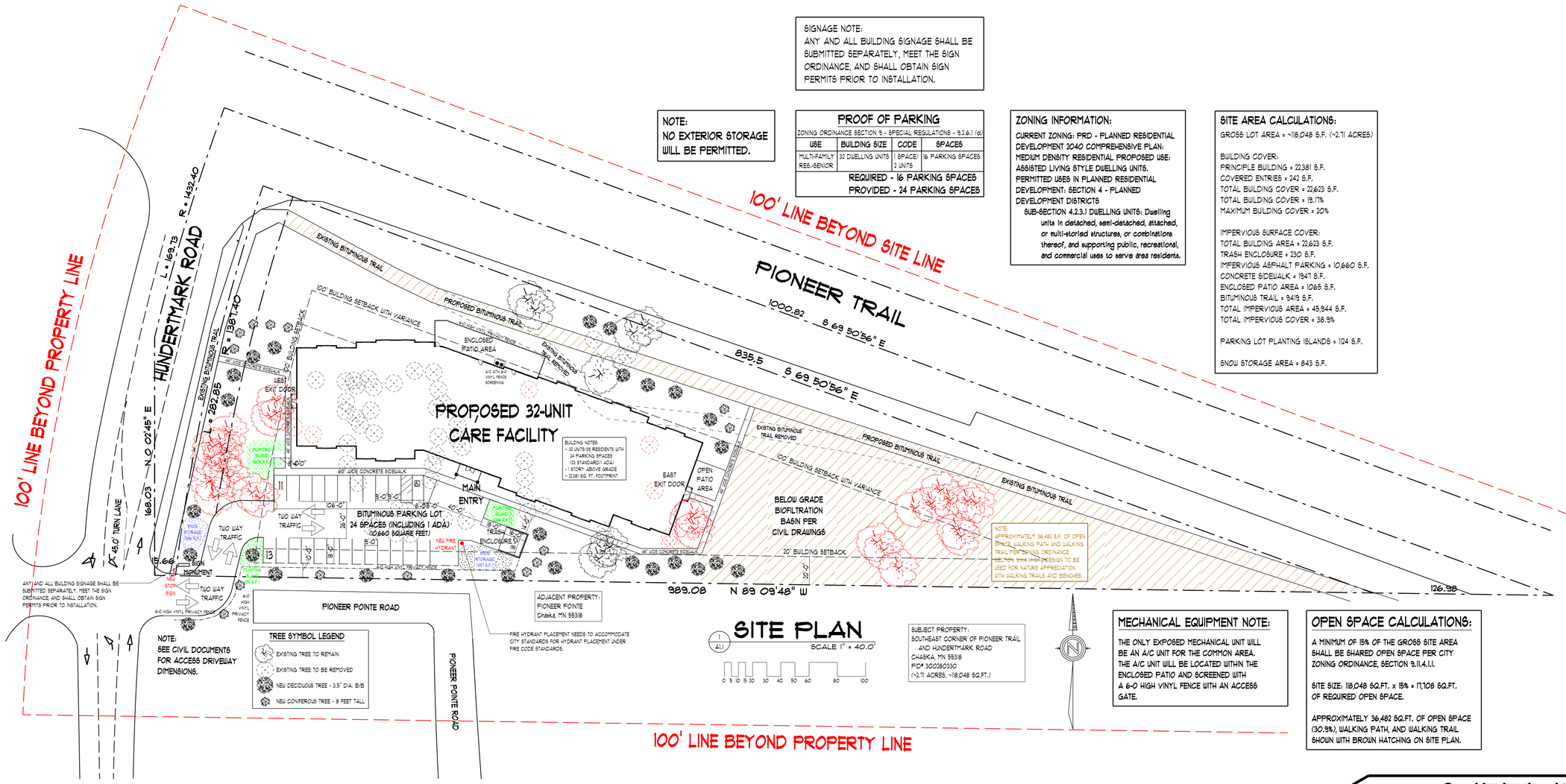

SITE PLAN

A1.1 SCALE 1" = 40.0'

0 5 10 15 20 30 40 50 60 80 100

SIGNAGE NOTE:
ANY AND ALL BUILDING SIGNAGE SHALL BE SUBMITTED SEPARATELY, MEET THE SIGN ORDINANCE, AND SHALL OBTAIN SIGN PERMITS PRIOR TO INSTALLATION.

NOTE:
NO EXTERIOR STORAGE WILL BE PERMITTED.

PROOF OF PARKING

ZONING ORDINANCE SECTION 9 - SPECIAL REGULATIONS - 9.2.6.1 (d)

USE	BUILDING SIZE	CODE	SPACES
MULTI-FAMILY RES.-SENIOR	32 DWELLING UNITS	1 SPACE/ 2 UNITS	16 PARKING SPACES
		REQUIRED -	16 PARKING SPACES
		PROVIDED -	24 PARKING SPACES

ZONING INFORMATION:

CURRENT ZONING: PRD - PLANNED RESIDENTIAL DEVELOPMENT
2040 COMPREHENSIVE PLAN: MEDIUM DENSITY RESIDENTIAL
PROPOSED USE: ASSISTED LIVING STYLE DWELLING UNITS.
PERMITTED USES IN PLANNED RESIDENTIAL DEVELOPMENT: SECTION 4 - PLANNED DEVELOPMENT DISTRICTS
SUB-SECTION 4.2.3.1 DWELLING UNITS: Dwelling units in detached, semi-detached, attached, or multi-storied structures, or combinations thereof, and supporting public, recreational, and commercial uses to serve area residents.

SITE AREA CALCULATIONS:

GROSS LOT AREA = ~118,048 S.F. (~2.71 ACRES)

BUILDING COVER:
PRINCIPLE BUILDING = 22,381 S.F.
COVERED ENTRIES = 242 S.F.
TOTAL BUILDING COVER = 22,623 S.F.
TOTAL BUILDING COVER = 19.17%
MAXIMUM BUILDING COVER = 20%

IMPERVIOUS SURFACE COVER:
TOTAL BUILDING AREA = 22,623 S.F.
TRASH ENCLOSURE = 230 S.F.
IMPERVIOUS ASPHALT PARKING = 10,660 S.F.
CONCRETE SIDEWALK = 1947 S.F.
ENCLOSED PATIO AREA = 1065 S.F.
BITUMINOUS TRAIL = 9419 S.F.
TOTAL IMPERVIOUS AREA = 45,944 S.F.
TOTAL IMPERVIOUS COVER = 38.9%

PARKING LOT PLANTING ISLANDS = 1124 S.F.

SNOW STORAGE AREA = 843 S.F.

MECHANICAL EQUIPMENT NOTE:

THE ONLY EXPOSED MECHANICAL UNIT WILL BE AN A/C UNIT FOR THE COMMON AREA. THE A/C UNIT WILL BE LOCATED WITHIN THE ENCLOSED PATIO AND SCREENED WITH A 6-0 HIGH VINYL FENCE WITH AN ACCESS GATE.

OPEN SPACE CALCULATIONS:

A MINIMUM OF 15% OF THE GROSS SITE AREA SHALL BE SHARED OPEN SPACE PER CITY ZONING ORDINANCE, SECTION 9.11.4.1.1.

SITE SIZE: 118,048 SQ.FT. x 15% = 17,708 SQ.FT. OF REQUIRED OPEN SPACE.

APPROXIMATELY 36,482 SQ.FT. OF OPEN SPACE (30.9%), WALKING PATH, AND WALKING TRAIL SHOWN WITH BROWN HATCHING ON SITE PLAN.

SUBJECT PROPERTY:
SOUTHEAST CORNER OF PIONEER TRAIL AND HUNDERTMARK ROAD
CHASKA, MN 55318
PID# 300280330
(~2.71 ACRES, ~118,048 SQ.FT.)

SHEET INDEX:

A1.1 TITLE SHEET AND SITE PLAN
A1.2 LANDSCAPE PLAN
A1.3 LIGHTING PLAN
A1.4 EXHIBIT A - PREVIOUS CONCEPT EXCAVATION
A1.5 EXHIBIT B - AERIAL SITE EXHIBIT
A1.6 EXHIBIT C - CONTEXT MAP/SITE INFLUENCES
A1.7 EXHIBIT D - 100' VS. 125' SETBACK EXHIBIT
A1.8 EXHIBIT E - BUILDING FACING NORTH EXHIBIT
A2.1 PROPOSED BUILDING FLOOR PLAN
A3.1 PROPOSED BUILDING EXTERIOR ELEVATIONS
A3.2 PROPOSED BUILDING EXTERIOR RENDERINGS

JIM MACKEY ARCHITECT
1723 LaFond Avenue
St. Paul, MN 55104
Jim Mackey
Office 651-644-0869
registration # 23018
Drafting by:
Todd Ofathun
Office 763-424-3676
Cell 952-994-8716
todd@tcodesign.net

Plan Date
FP APPL. 4-15-22

CANTIGNIMO OF CHASKA
PID# 300280330 (PIONEER TRAIL AND HUNDERTMARK ROAD), CHASKA

TCO DESIGN
drafting and home design
P.O. Box 47780
Plymouth, MN 55447
dedication to excellence
Prepared by:
Todd Ofathun
Office 763-424-3676
Cell 952-994-8716
todd@tcodesign.net

Design #
tco202104

SITE PLAN
A1.1

ADDITIONAL PLANTING NOTE:

ADDITIONAL PLANTING BEDS AROUND BUILDING PERIMETER TO BE PROVIDED LIKE PICTURES PROVIDED AND LANDSCAPE PLAN TO BE PROVIDED DURING PERMIT PROCESS.

ZONING INFORMATION:

CURRENT ZONING: PRD - PLANNED RESIDENTIAL DEVELOPMENT 2040 COMPREHENSIVE PLAN: MEDIUM DENSITY RESIDENTIAL PROPOSED USE: ASSISTED LIVING STYLE DWELLING UNITS. PERMITTED USES IN PLANNED RESIDENTIAL DEVELOPMENT: SECTION 4 - PLANNED DEVELOPMENT DISTRICTS

SUB-SECTION 4.2.3.1 DWELLING UNITS: Dwelling units in detached, semi-detached, attached, or multi-storied structures, or combinations thereof, and supporting public, recreational, and commercial uses to serve area residents.

SITE AREA CALCULATIONS:

GROSS LOT AREA = ~118,048 S.F. (~2.71 ACRES)

BUILDING COVER:
PRINCIPLE BUILDING = 22,381 S.F.
COVERED ENTRIES = 242 S.F.
TOTAL BUILDING COVER = 22,623 S.F.
TOTAL BUILDING COVER = 19.17%
MAXIMUM BUILDING COVER = 20%

IMPERVIOUS SURFACE COVER:
TOTAL BUILDING AREA = 22,623 S.F.
TRASH ENCLOSURE = 230 S.F.
IMPERVIOUS ASPHALT PARKING = 10,660 S.F.
CONCRETE SIDEWALK = 1947 S.F.
ENCLOSED PATIO AREA = 1065 S.F.
BITUMINOUS TRAIL = 9419 S.F.
TOTAL IMPERVIOUS AREA = 45,944 S.F.
TOTAL IMPERVIOUS COVER = 38.9%

PARKING LOT PLANTING ISLANDS = 1124 S.F.

SNOW STORAGE AREA = 843 S.F.

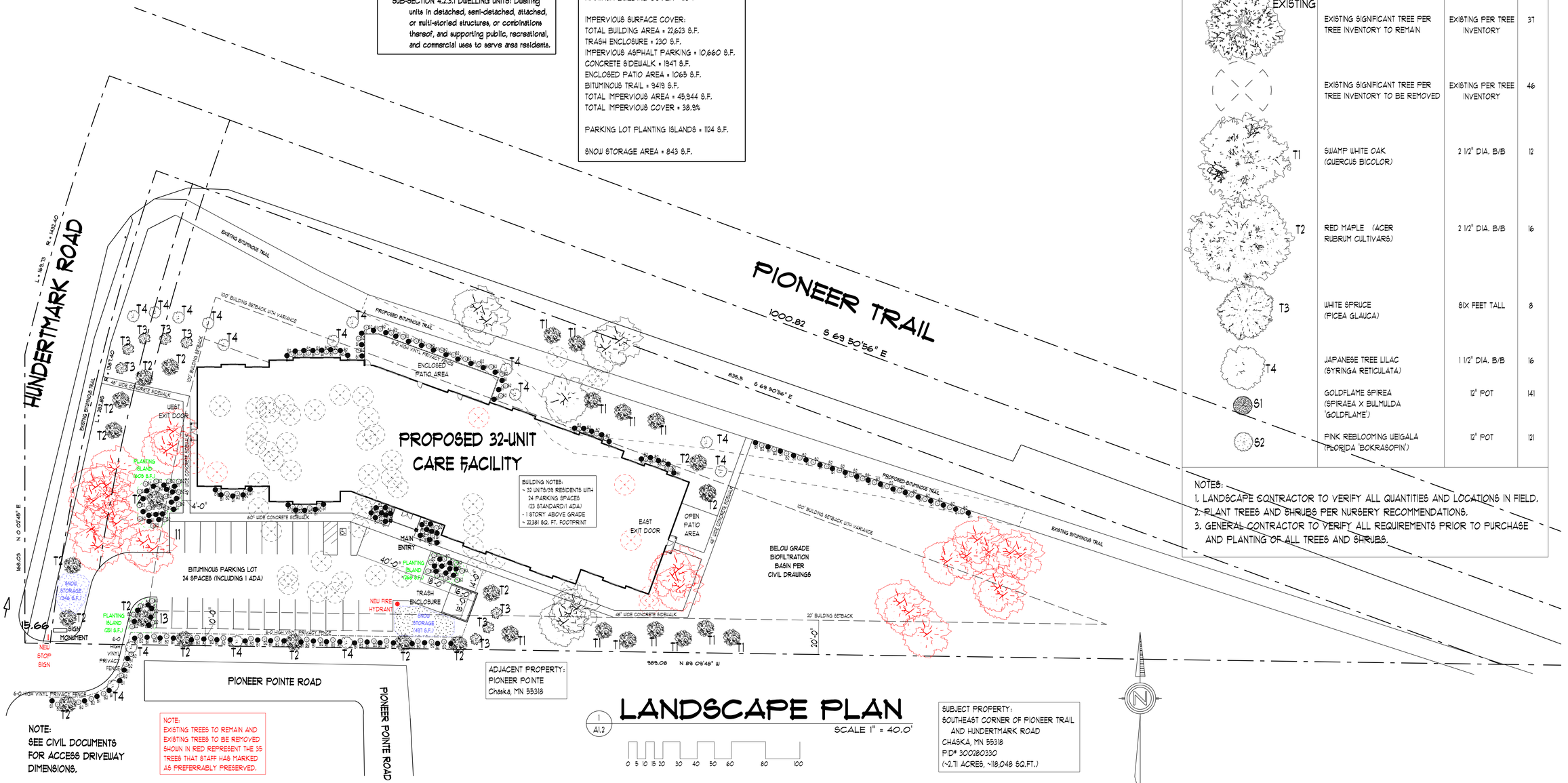

LANDSCAPE PLAN

1 / A1.2

SCALE 1" = 40.0'

PLANTING SCHEDULE

SYMBOL	COMMON NAME (SCIENTIFIC NAME)	SIZE/TYPE	QTY.
EXISTING	EXISTING SIGNIFICANT TREE PER TREE INVENTORY TO REMAIN	EXISTING PER TREE INVENTORY	37
	EXISTING SIGNIFICANT TREE PER TREE INVENTORY TO BE REMOVED	EXISTING PER TREE INVENTORY	46
T1	SWAMP WHITE OAK (QUERCUS BICOLOR)	2 1/2" DIA. B/B	12
T2	RED MAPLE (ACER RUBRUM CULTIVARS)	2 1/2" DIA. B/B	16
T3	WHITE SPRUCE (PICEA GLAUCA)	SIX FEET TALL	8
T4	JAPANESE TREE LILAC (SYRINGA RETICULATA)	1 1/2" DIA. B/B	16
S1	GOLDFLAME SPIREA (SPIRAEA X BULMULDA 'GOLDFLAME')	12" POT	141
S2	PINK REBLOOMING WEIGALA (FLORIDA 'BOKRASOFIN')	12" POT	121

NOTES:
1. LANDSCAPE CONTRACTOR TO VERIFY ALL QUANTITIES AND LOCATIONS IN FIELD.
2. PLANT TREES AND SHRUBS PER NURSERY RECOMMENDATIONS.
3. GENERAL CONTRACTOR TO VERIFY ALL REQUIREMENTS PRIOR TO PURCHASE AND PLANTING OF ALL TREES AND SHRUBS.

JIM MACKEY ARCHITECT
JIM MACKEY ARCHITECT
1723 LaFond Avenue
St. Paul, MN 55104
Jim Mackey
Office 651-644-0869
registration # 23018
Drafting by:
Todd Ofathun
Office 763-424-3676
Cell 952-994-8716
todd@todddesign.net

Plan Date
FP APPL. 4-15-22

CANTIGGIMO OF CHASKA
PID# 300280330 (PIONEER TRAIL AND HUNDERTMARK ROAD), CHASKA

TCO DESIGN
drafting and home design
P.O. Box 47780
Plymouth, MN 55447
dedication to excellence
Prepared by:
Todd Ofathun
Office 763-424-3676
Cell 952-994-8716
todd@todddesign.net

Design #
tco202104
LANDSCAPE PLAN
A1.2

LIGHTING SCHEDULE

DES.	QTY.	MANUF.	CATALOG DES.	TYPE	LIGHT RATING B	LIGHT RATING U	LIGHT RATING G	LUMENS	MOUNTING INSTRUCTIONS	DESCRIPTION
L1	9	LITHONIA LIGHTING	WST LED 2A 30K 120 DIFS	WSTM LED WALL SCONCE	B1	U0	G0	1543	WALL MOUNTED - 12" ABOVE DOOR	WSTM LED WITH 2 BOARDS, 3000K CCT, 120 VOLT, DIFFUSE GLASS LENS
L2	10	LITHONIA LIGHTING	WST LED 2A 30K 120 DIFS	WSTM LED WALL SCONCE	B1	U0	G0	1543	WALL MOUNTED - 8'-0" ABOVE GRADE	WSTM LED WITH 2 BOARDS, 3000K CCT, 120 VOLT, DIFFUSE GLASS LENS
L3	3	LITHONIA LIGHTING	KAD LED 20C 1000 30K R2 MVOLT	KAD-LED SOFT SQUARE	B2	U0	G2	6143	POLE MOUNTED - 18'-0" ABOVE GRADE	KAD LED, 20 LED, 1 AMP MVOLT DRIVER, 3000K, TYPE 2 OPTICS

NOTE: SEE LIGHTING PLAN FOR DISTANCE TO PROPERTY LINE.

NOTE:
INSTALLATION OF ALL SITE LIGHTING TO BE AT A ZERO (0) DEGREES ANGLE WITH THE LIGHT SOURCE FULLY CONCEALED AT THE PROPERTY LINE.

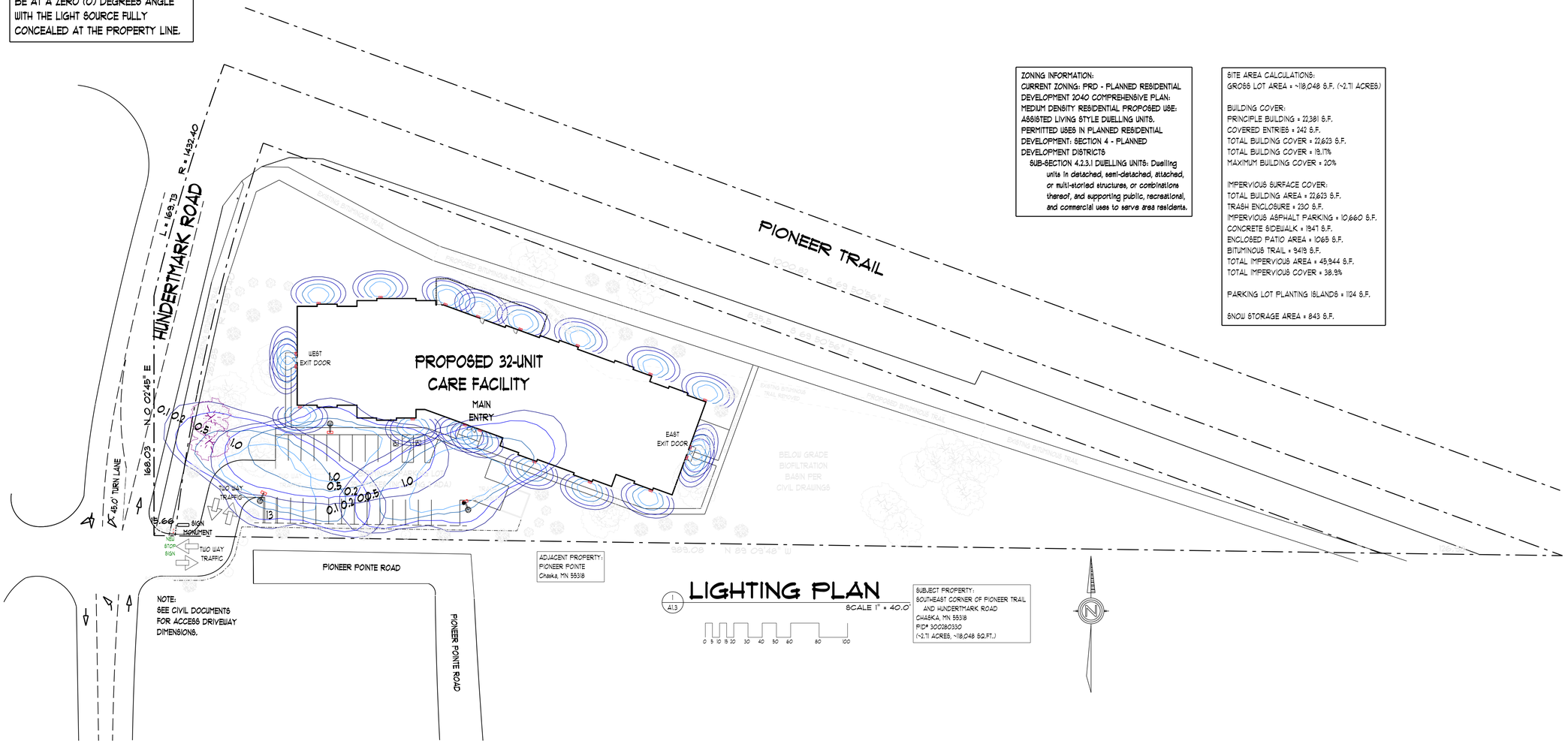

NOTE:
SEE CIVIL DOCUMENTS FOR ACCESS DRIVEWAY DIMENSIONS.

ADJACENT PROPERTY:
PIONEER POINTE
Chaska, MN 55318

LIGHTING PLAN

1 / A1.3

SCALE 1" = 40.0'

0 5 10 15 20 30 40 50 60 80 100

SUBJECT PROPERTY:
SOUTHEAST CORNER OF PIONEER TRAIL AND HUNDERTMARK ROAD
CHASKA, MN 55318
PID# 300280330
(~2.71 ACRES, ~118,048 SQ.FT.)

ZONING INFORMATION:
CURRENT ZONING: PRD - PLANNED RESIDENTIAL DEVELOPMENT 2040 COMPREHENSIVE PLAN:
MEDIUM DENSITY RESIDENTIAL PROPOSED USE:
ASSISTED LIVING STYLE DWELLING UNITS.
PERMITTED USES IN PLANNED RESIDENTIAL DEVELOPMENT: SECTION 4 - PLANNED DEVELOPMENT DISTRICTS
SUB-SECTION 4.2.3.1 DWELLING UNITS: Dwelling units in detached, semi-detached, attached, or multi-storied structures, or combinations thereof, and supporting public, recreational, and commercial uses to serve area residents.

SITE AREA CALCULATIONS:
GROSS LOT AREA = ~118,048 S.F. (~2.71 ACRES)

BUILDING COVER:
PRINCIPLE BUILDING = 22,381 S.F.
COVERED ENTRIES = 242 S.F.
TOTAL BUILDING COVER = 22,623 S.F.
TOTAL BUILDING COVER = 19.17%
MAXIMUM BUILDING COVER = 20%

IMPERVIOUS SURFACE COVER:
TOTAL BUILDING AREA = 22,623 S.F.
TRASH ENCLOSURE = 230 S.F.
IMPERVIOUS ASPHALT PARKING = 10,660 S.F.
CONCRETE SIDEWALK = 1941 S.F.
ENCLOSED PATIO AREA = 1065 S.F.
BITUMINOUS TRAIL = 9419 S.F.
TOTAL IMPERVIOUS AREA = 45,944 S.F.
TOTAL IMPERVIOUS COVER = 38.9%

PARKING LOT PLANTING ISLANDS = 1124 S.F.

SNOW STORAGE AREA = 843 S.F.

JIM MACKEY ARCHITECT
1723 LaFond Avenue
St. Paul, MN 55104
Jim Mackey
Office 651-644-0869
registration # 23018
Drafting by:
Todd Ofsthun
Office 763-424-3676
Cell 952-854-8276
todd@tcodesign.net

Plan Date
FP APPL. 4-15-22

CANTIGIMO OF CHASKA
PID# 300280330 (PIONEER TRAIL AND HUNDERTMARK ROAD), CHASKA

TCO DESIGN
drafting and home design
P.O. Box 41730
Plymouth, MN 55441
dedication to excellence
Prepared by:
Todd Ofsthun
Office 763-424-3676
Cell 952-854-8276
todd@tcodesign.net

Design #
tco202104

LIGHTING PLAN
A1.3

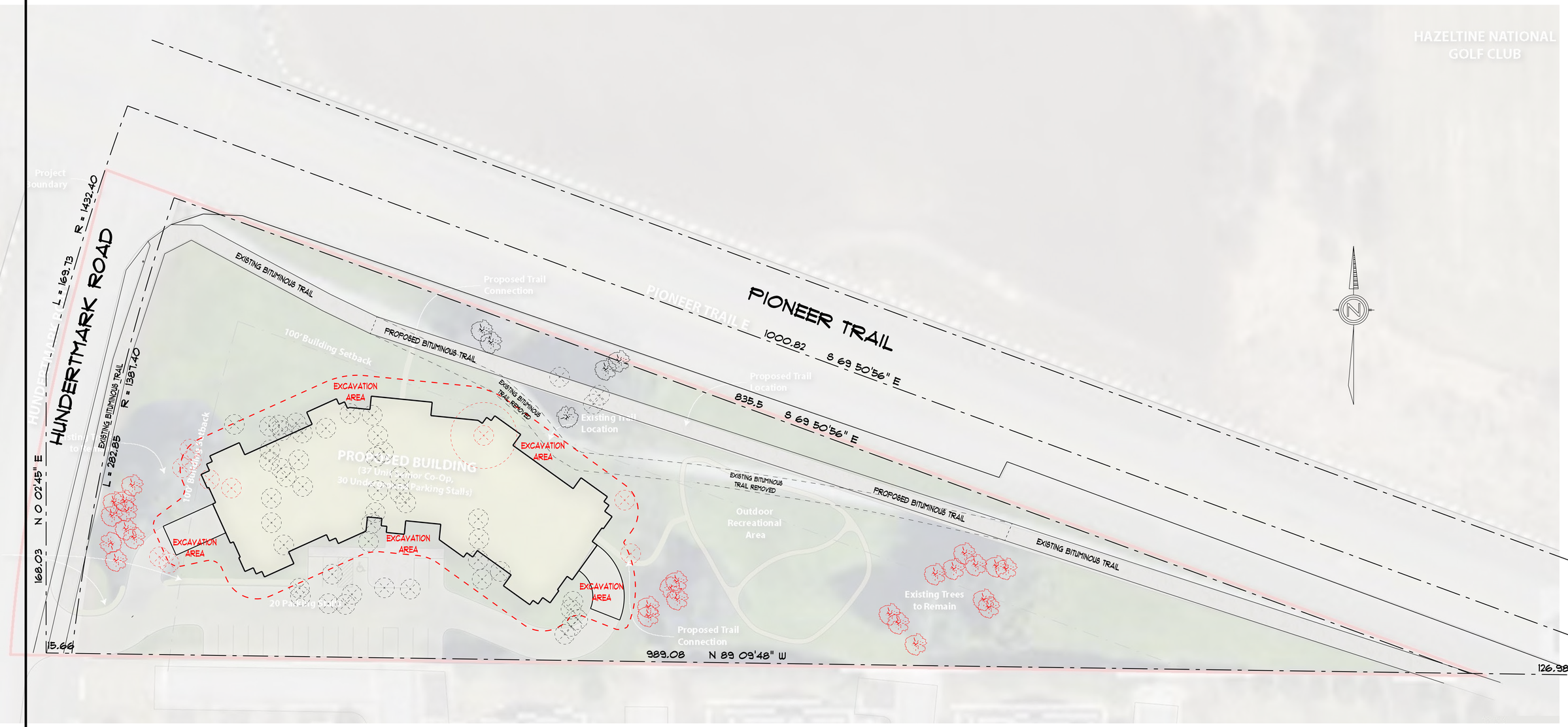

ADJACENT PROPERTY:
PIONEER POINTE
Chaska, MN 55318

NOTE:
EXISTING TREES TO REMAIN AND EXISTING TREES TO BE REMOVED SHOWN IN RED REPRESENT THE 35 TREES THAT STAFF HAS MARKED AS PREFERRIABLY PRESERVED.

1 / A1.4 **PREVIOUS CONCEPT EXCAVATION AREA PLAN**

SCALE 1" = 30.0'

0 5 10 15 20 30 40 50 60 80 100

SUBJECT PROPERTY:
SOUTHEAST CORNER OF PIONEER TRAIL AND HUNDERTMARK ROAD
CHASKA, MN 55318
PID# 300280330
(+2.71 ACRES, +118,048 SQ.FT.)

JIM MACKEY ARCHITECT

JIM MACKEY ARCHITECT
1723 LaFond Avenue
St. Paul, MN 55104
Jim Mackey
Office 651-644-0869
registration # 23018
Drafting by:
Todd Ofthun
Office 763-424-3676
Cell 952-934-8776
todd@tcodesign.net

Plan Date
FP APPL. 4-15-22

CANTIGNIMO OF CHASKA
PID# 300280330 (PIONEER TRAIL AND HUNDERTMARK ROAD), CHASKA

TCO DESIGN
drafting and home design
P.O. Box 47190
Plymouth, MN 55447
dedication to excellence
Prepared by:
Todd Ofthun
Office 763-424-3676
Cell 952-934-8776
todd@tcodesign.net

Design #
tco202104
EXCAVATION EXHIBIT
A1.4

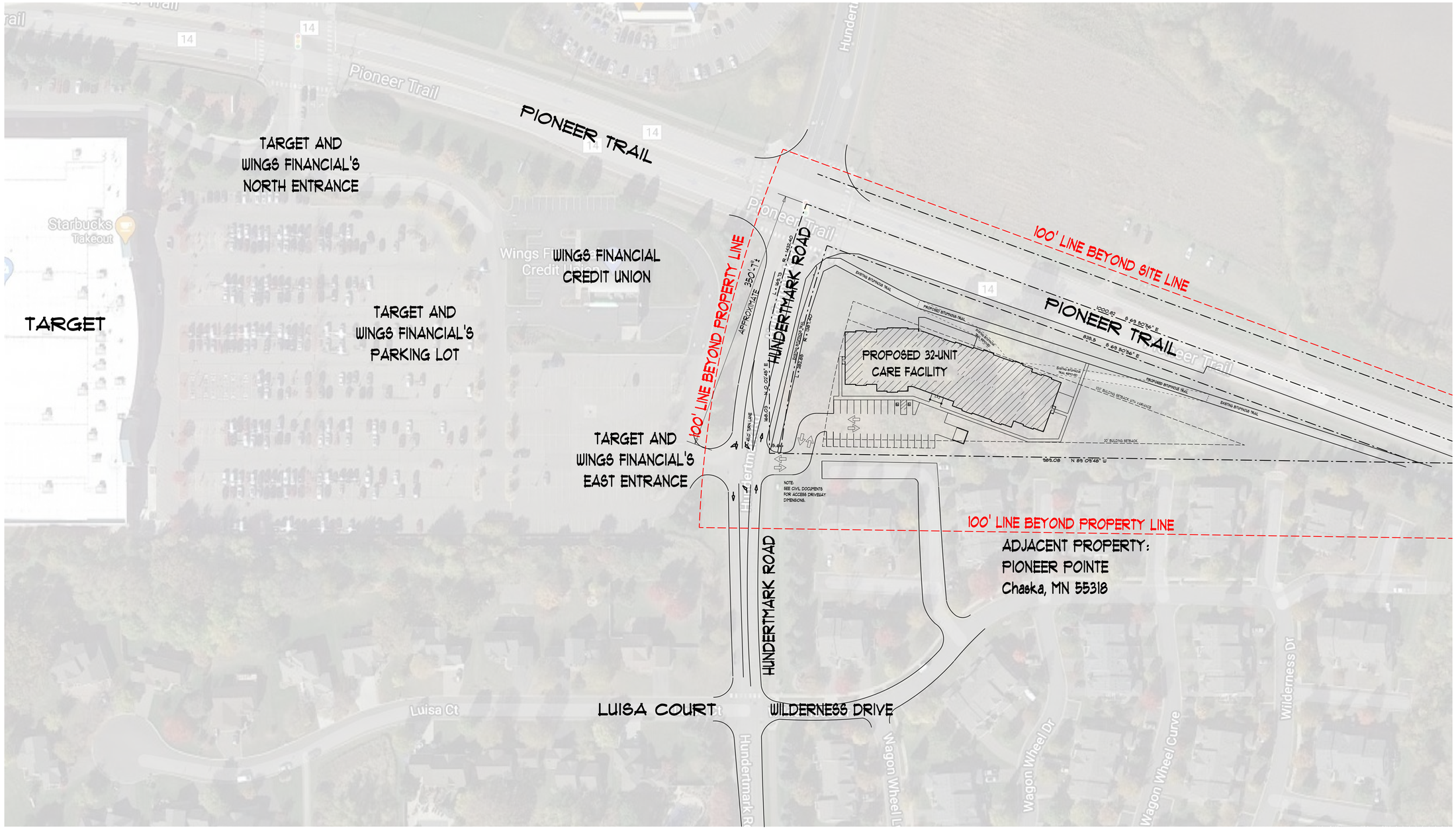

1 A1.5 **AERIAL SITE EXHIBIT**

SCALE 1" = 150.0'

0 20 40 60 80 100 150 200 300

SUBJECT PROPERTY:
SOUTHEAST CORNER OF PIONEER TRAIL
AND HUNDERTMARK ROAD
CHASKA, MN 55318
PID# 300280330
(~2.71 ACRES, ~118,048 SQ.FT.)

JIM MACKEY ARCHITECT

JIM MACKEY ARCHITECT
1723 LaFond Avenue
St. Paul, MN 55104

Jim Mackey
Office 651-644-0869

registration # 23018

Drafting by:
Todd Ofsthun
Office 763-424-3676
Cell 952-854-8276

todd@tcodesign.net

Plan Date
PP APPL. 4-15-22

CANTISIMO OF CHASKA
PID# 300280330 (PIONEER TRAIL AND HUNDERTMARK ROAD), CHASKA

TCO DESIGN
drafting and home design

P.O. Box 41730
Plymouth, MN 55441

dedication to excellence

Prepared by:
Todd Ofsthun
Office 763-424-3676
Cell 952-854-8276

todd@tcodesign.net

Design #
tco202104

AERIAL SITE OVERVIEW

A1.5

Context Map / Site Influences



JIM MACKEY ARCHITECT

JIM MACKEY ARCHITECT
1123 LaFond Avenue
St. Paul, MN 55104
Jim Mackey
Office 651-644-0869
registration # 23018
Drafting by
Todd Ofethun
Office 763-424-3676
Cell 952-854-8276
todd@tcodesign.net

Plan Date
FP APPL. 4-15-22

CANTIGGIMO OF CHASKA
PID# 3002803301 (PIONEER TRAIL AND HUNDERTMARK ROAD), CHASKA

TCO DESIGN
drafting and home design
P.O. Box 47190
Plymouth, MN 55447
dedication to excellence
Prepared by
Todd Ofethun
Office 763-424-3676
Cell 952-854-8276
todd@tcodesign.net

Design #
tco202104
SITE INFLUENCES
A1.6

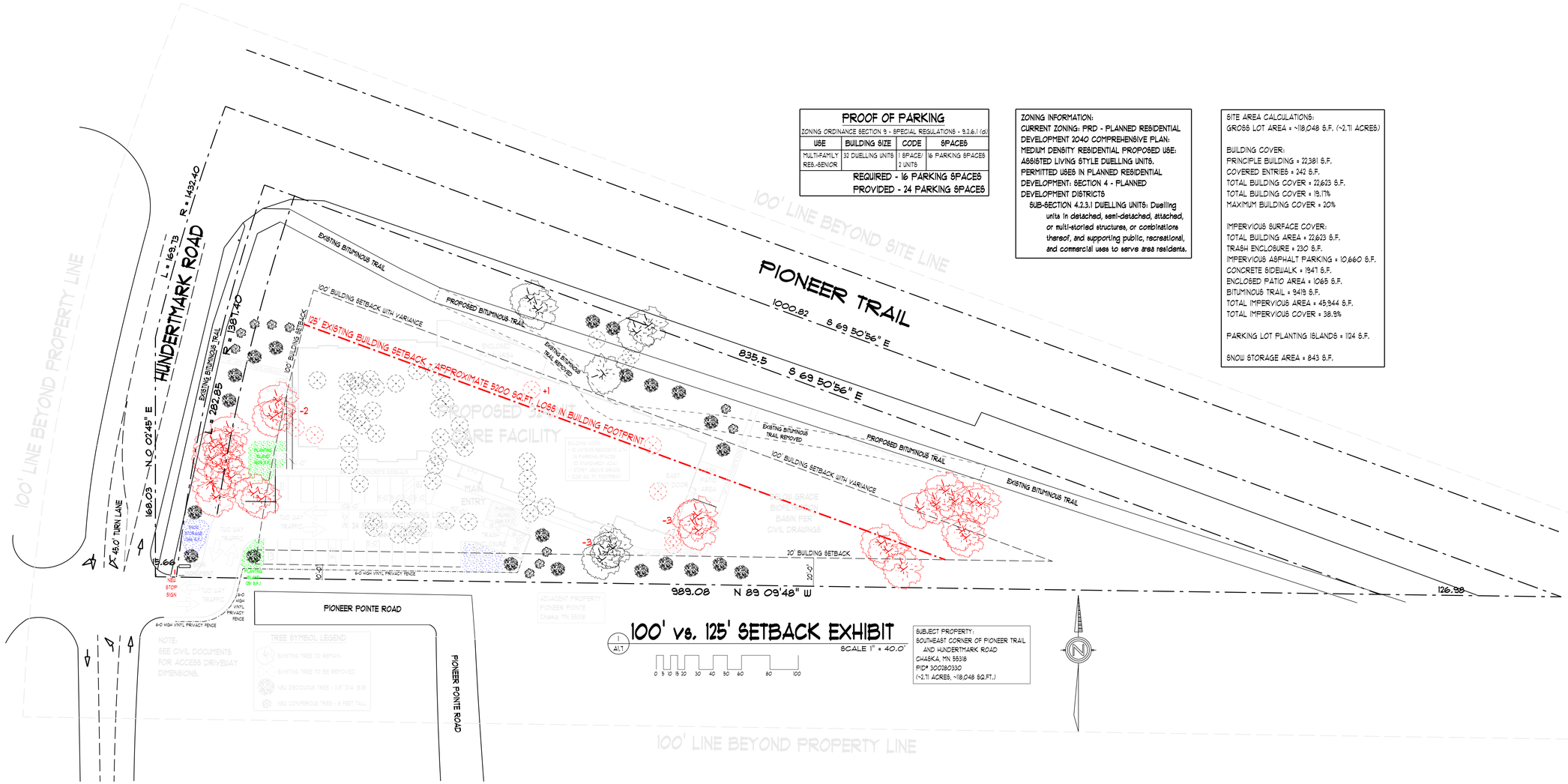

100' vs. 125' SETBACK EXHIBIT

1 A1.1

SCALE 1" = 40.0'

0 5 10 15 20 30 40 50 60 80 100

PROOF OF PARKING			
ZONING ORDINANCE SECTION 9 - SPECIAL REGULATIONS - 9.2.6.1 (a)			
USE	BUILDING SIZE	CODE	SPACES
MULTI-FAMILY RES.-SENIOR	32 DWELLING UNITS	1 SPACE/ 2 UNITS	16 PARKING SPACES
REQUIRED - 16 PARKING SPACES			
PROVIDED - 24 PARKING SPACES			

ZONING INFORMATION:
CURRENT ZONING: PRD - PLANNED RESIDENTIAL DEVELOPMENT 2040 COMPREHENSIVE PLAN:
MEDIUM DENSITY RESIDENTIAL PROPOSED USE:
ASSISTED LIVING STYLE DWELLING UNITS.
PERMITTED USES IN PLANNED RESIDENTIAL DEVELOPMENT: SECTION 4 - PLANNED DEVELOPMENT DISTRICTS
SUB-SECTION 4.2.3.1 DWELLING UNITS: Dwelling units in detached, semi-detached, attached, or multi-storied structures, or combinations thereof, and supporting public, recreational, and commercial uses to serve area residents.

SITE AREA CALCULATIONS:
GROSS LOT AREA = ~118,048 S.F. (~2.71 ACRES)

BUILDING COVER:
PRINCIPLE BUILDING = 22,381 S.F.
COVERED ENTRIES = 242 S.F.
TOTAL BUILDING COVER = 22,623 S.F.
TOTAL BUILDING COVER = 19.17%
MAXIMUM BUILDING COVER = 20%

IMPERVIOUS SURFACE COVER:
TOTAL BUILDING AREA = 22,623 S.F.
TRASH ENCLOSURE = 230 S.F.
IMPERVIOUS ASPHALT PARKING = 10,660 S.F.
CONCRETE SIDEWALK = 1941 S.F.
ENCLOSED PATIO AREA = 1065 S.F.
BITUMINOUS TRAIL = 9419 S.F.
TOTAL IMPERVIOUS AREA = 45,944 S.F.
TOTAL IMPERVIOUS COVER = 38.9%

PARKING LOT PLANTING ISLANDS = 1124 S.F.

SNOW STORAGE AREA = 843 S.F.

SUBJECT PROPERTY:
SOUTHEAST CORNER OF PIONEER TRAIL AND HUNDERTMARK ROAD
CHASKA, MN 55318
PID# 300280330
(~2.71 ACRES, ~118,048 SQ.FT.)

JIM MACKEY ARCHITECT
1723 LaFond Avenue
St. Paul, MN 55104
Jim Mackey
Office 651-644-0869
registration # 23018
Drafting by:
Todd Ofathun
Office 763-424-3676
Cell 952-994-8716
todd@tcodesign.net

Plan Date
FP APPL. 4-15-22

CANTIGNIMO OF CHASKA
PID# 300280330 (PIONEER TRAIL AND HUNDERTMARK ROAD), CHASKA

TCO DESIGN
drafting and home design
P.O. Box 47780
Plymouth, MN 55447
dedication to excellence
Prepared by:
Todd Ofathun
Office 763-424-3676
Cell 952-994-8716
todd@tcodesign.net

Design #
tco202104
100' vs 125'
EXHIBIT
A1.1

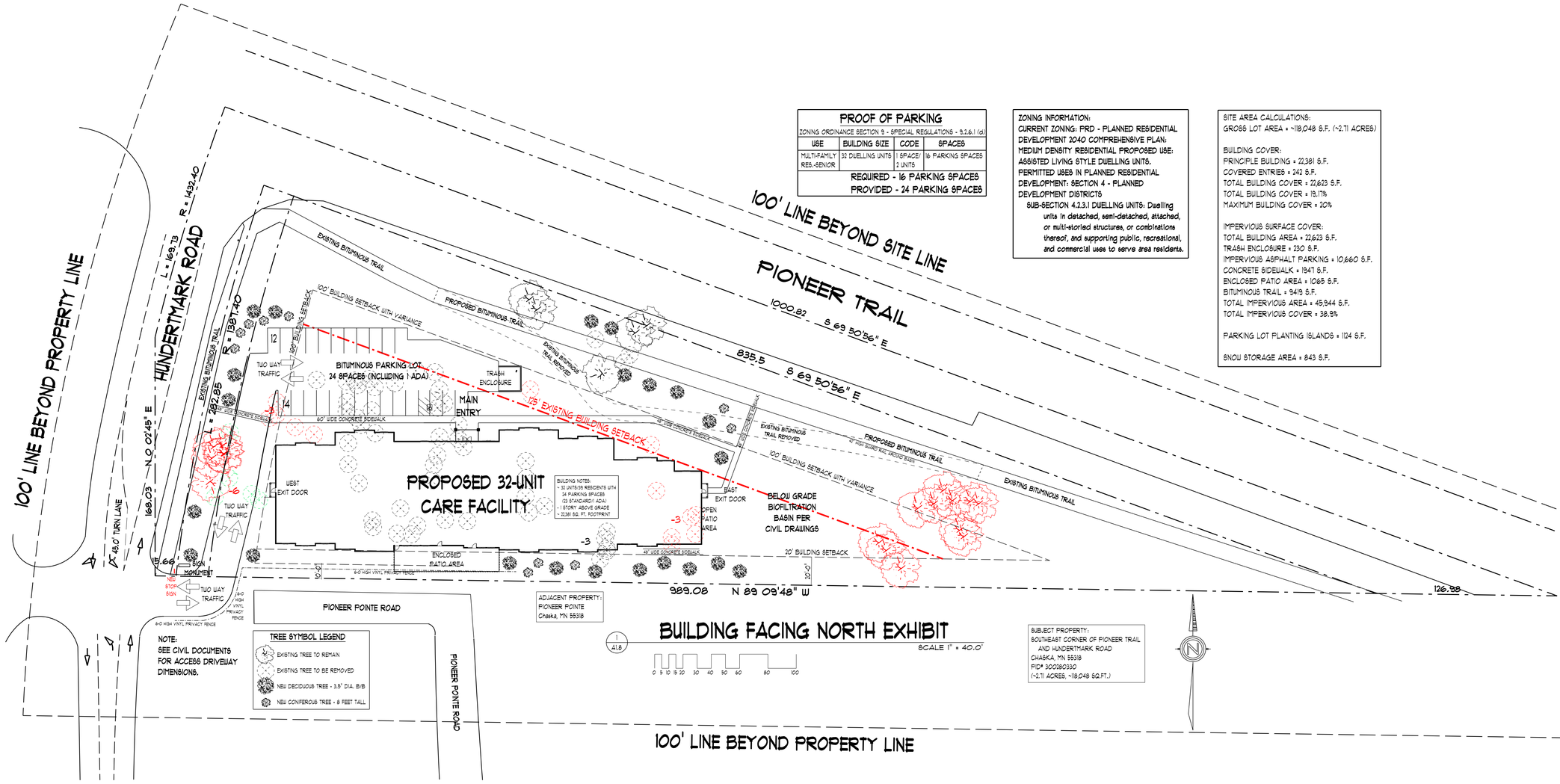

BUILDING FACING NORTH EXHIBIT

1 / A1.8

SCALE 1" = 40.0'

0 5 10 15 20 30 40 50 60 80 100

PROOF OF PARKING

ZONING ORDINANCE SECTION 9 - SPECIAL REGULATIONS - 9.2.6.1 (d)

USE	BUILDING SIZE	CODE	SPACES
MULTI-FAMILY RES.-SENIOR	32 DWELLING UNITS	1 SPACE/ 2 UNITS	16 PARKING SPACES

REQUIRED - 16 PARKING SPACES
PROVIDED - 24 PARKING SPACES

ZONING INFORMATION:
CURRENT ZONING: PRD - PLANNED RESIDENTIAL DEVELOPMENT
2040 COMPREHENSIVE PLAN: MEDIUM DENSITY RESIDENTIAL
PROPOSED USE: ASSISTED LIVING STYLE DWELLING UNITS.
PERMITTED USES IN PLANNED RESIDENTIAL DEVELOPMENT: SECTION 4 - PLANNED DEVELOPMENT DISTRICTS
SUB-SECTION 4.2.3.1 DWELLING UNITS: Dwelling units in detached, semi-detached, attached, or multi-storied structures, or combinations thereof, and supporting public, recreational, and commercial uses to serve area residents.

SITE AREA CALCULATIONS:
GROSS LOT AREA = ~118,048 S.F. (~2.71 ACRES)

BUILDING COVER:
PRINCIPLE BUILDING = 22,381 S.F.
COVERED ENTRIES = 242 S.F.
TOTAL BUILDING COVER = 22,623 S.F.
TOTAL BUILDING COVER = 19.17%
MAXIMUM BUILDING COVER = 20%

IMPERVIOUS SURFACE COVER:
TOTAL BUILDING AREA = 22,623 S.F.
TRASH ENCLOSURE = 230 S.F.
IMPERVIOUS ASPHALT PARKING = 10,660 S.F.
CONCRETE SIDEWALK = 1947 S.F.
ENCLOSED PATIO AREA = 1065 S.F.
BITUMINOUS TRAIL = 9419 S.F.
TOTAL IMPERVIOUS AREA = 45,944 S.F.
TOTAL IMPERVIOUS COVER = 38.9%

PARKING LOT PLANTING ISLANDS = 1124 S.F.

SNOW STORAGE AREA = 843 S.F.

SUBJECT PROPERTY:
SOUTHEAST CORNER OF PIONEER TRAIL AND HUNDERTMARK ROAD
CHASKA, MN 55318
PID# 300280330
(~2.71 ACRES, ~118,048 SQ.FT.)

N

JIM MACKEY ARCHITECT

JIM MACKEY ARCHITECT
1723 LaFond Avenue
St. Paul, MN 55104
Jim Mackey
Office 651-644-0869
registration # 23018
Drafting by:
Todd Ofathun
Office 763-424-3676
Cell 952-854-8716
todd@tcodesign.net

Plan Date
FP APPLI. 4-15-22

CANTIGNIMO OF CHASKA
PID# 300280330 (PIONEER TRAIL AND HUNDERTMARK ROAD), CHASKA

TCO DESIGN
drafting and home design
P.O. Box 41780
Plymouth, MN 55441
dedication to excellence
Prepared by:
Todd Ofathun
Office 763-424-3676
Cell 952-854-8716
todd@tcodesign.net

Design #
tco202104
FACING NO. EXHIBIT
A1.8

PIONEER TRAIL

PIONEL

HUNDERTMARK ROAD

DT

S

0 40 80

SCALE IN FEET

DEMARC
LAND SURVEYING & ENGINEERING

CANTISSIMO OF CHASKA
XXX HUNDERTMARK ROAD
CHASKA, MN

GARBAGE TRUCK
TURNING MOVEMENTS

EXHIBIT A

02.21.2022

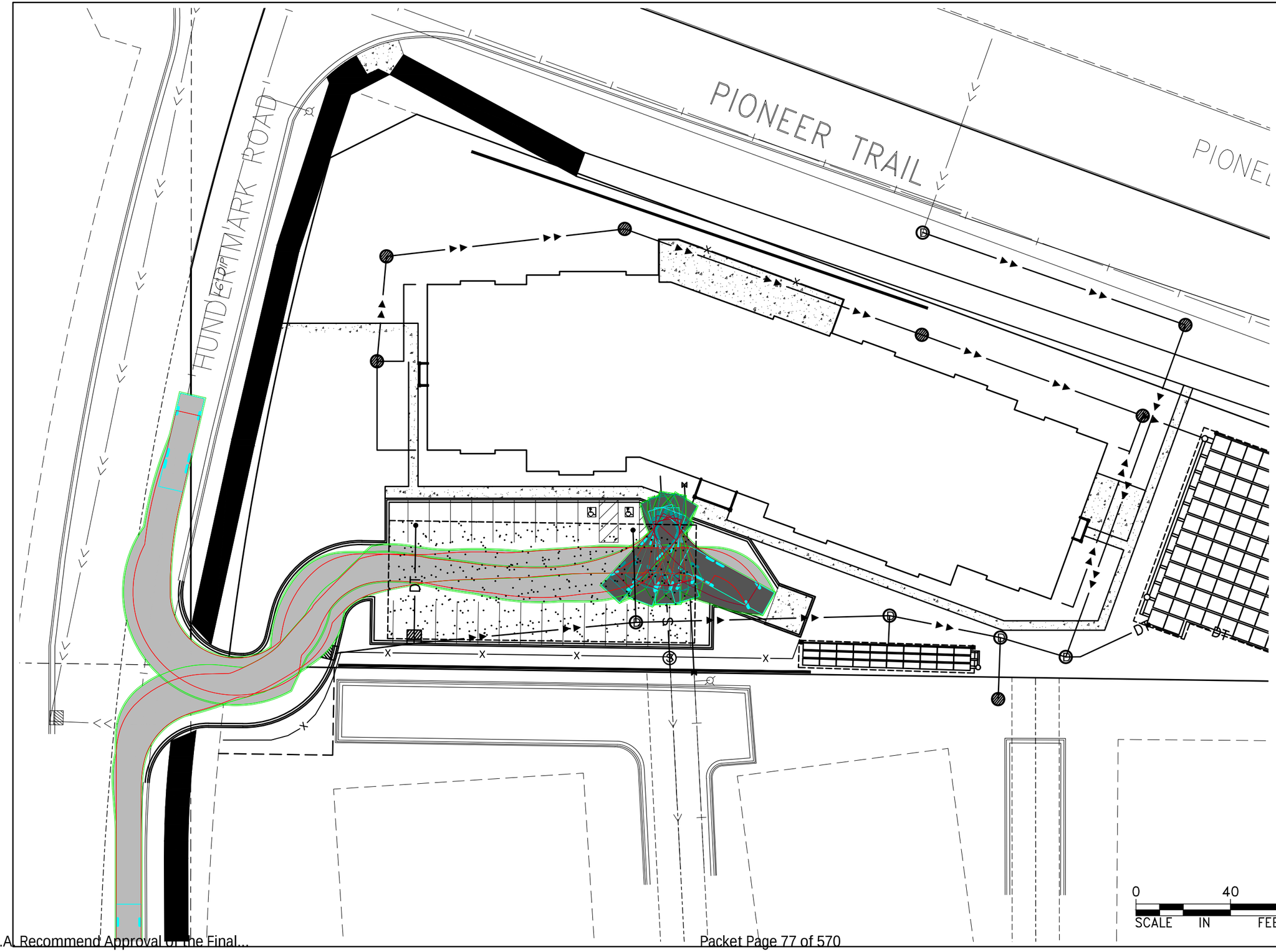

DEMARC
LAND SURVEYING & ENGINEERING

CANTISSIMO OF CHASKA
XXX HUNDERTMARK ROAD
CHASKA, MN

FIRETRUCK TURNING MOVEMENTS

EXHIBIT A

03.22.2022



LEGEND

- Spot Elevation
- Fire Hydrant
- Survey Control Point
- Set 1/2" X 14" rebar marked with cap no. 22703
- Contour Line
- Existing Tree
- Tree to be Removed
- Proposed Tree Protection Fence per City Standard Detail GEN-10

SCALE IN FEET

0 50 100 150

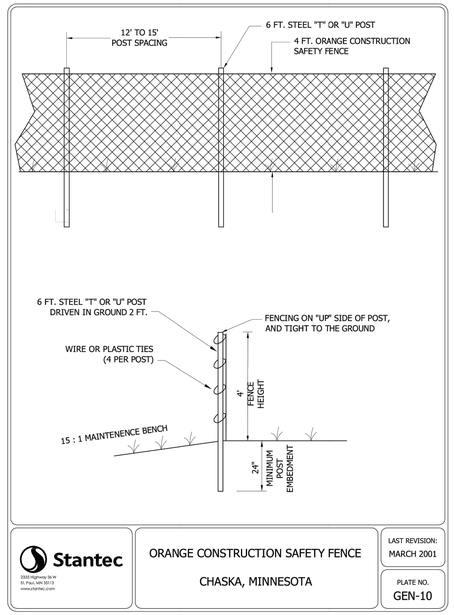

Stantec
3535 Highway 36 W
St. Paul, MN 55113
www.stantec.com

ORANGE CONSTRUCTION SAFETY FENCE

CHASKA, MINNESOTA

LAST REVISION: MARCH 2001

PLATE NO. GEN-10

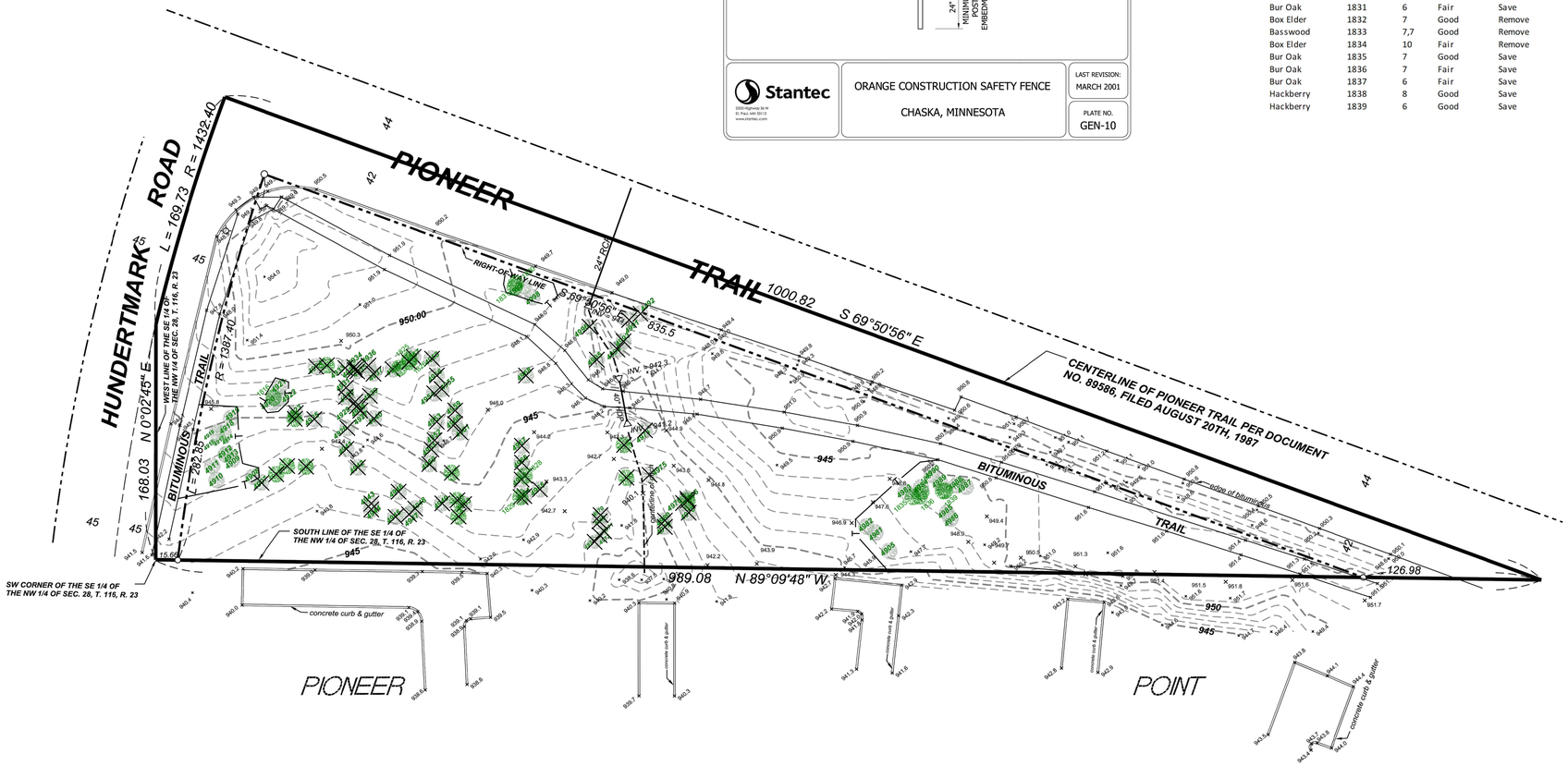

Species List	ID	DBH	Condition	Status
Hackberry	1816	8	Good	Save
American Elm	1817	7	Good	Remove
Basswood	1818	7	Good	Remove
Basswood	1819	7	Good	Remove
Basswood	1820	7	Good	Remove
Basswood	1821	7	Good	Remove
Basswood	1822	8	Fair	Remove
Basswood	1823	6	Good	Remove
American Elm	1824	6	Good	Remove
Basswood	1825	7	Good	Remove
Basswood	1826	7	Good	Remove
Basswood	1827	6	Good	Remove
American Elm	1828	8	Good	Remove
Basswood	1829	8	Fair	Remove
Bur Oak	1830	6	Good	Save
Bur Oak	1831	6	Fair	Save
Box Elder	1832	7	Good	Remove
Basswood	1833	7,7	Good	Remove
Box Elder	1834	10	Fair	Remove
Bur Oak	1835	7	Good	Save
Bur Oak	1836	7	Fair	Save
Bur Oak	1837	6	Fair	Save
Hackberry	1838	8	Good	Save
Hackberry	1839	6	Good	Save

Species List	ID	DBH	Condition	Status
Bur oak	4999	7	8	Save
Hackberry	4998	7	6	Save
Bur oak	4996	8	5	Remove
Eastern cottonwood	4995	25	7	Remove
Eastern cottonwood	4994	23	7	Remove
Box elder	4993	7	5	Remove
Box elder	4992	10	5	Remove
Box elder	4991	10	5	Remove
Box elder	4990	7	5	Save
Hackberry	4989	11	6	Save
American elm	4988	23	2	Save
Bur oak	4987	7	4	Save
Box elder	4986	15	3	Save
Box elder	4985	18	2	Save
Bur oak	4984	6	6	Save
Bur oak	4983	8	6	Save
American elm	4982	8	4	Save
White oak	4981	40	1	Save
American elm	4980	10	5	Remove
American elm	4979	13	5	Remove
American elm	4978	7	5	Remove
Bur oak	4976	34	5	Remove
Box elder	4975	12	5	Remove
Box elder	4974	12	4	Remove
Bur oak	4973	7	4	Remove
Bur oak	4972	42	7	Remove
Bur oak	4971	10	4	Remove
Bur oak	4970	7	4	Remove
Bur oak	4969	9	4	Remove
Bur oak	4968	33	7	Remove
White oak	4967	6	7	Remove
Bur oak	4966	34	5	Remove
Eastern red cedar (junipe	4965	2	7	Remove
Eastern red cedar (junipe	4964	2	7	Remove
White oak	4963	7	7	Remove
White oak	4962	7	6	Remove
White oak	4961	9	6	Remove
Green ash (red ash)	4960	7	7	Remove
White oak	4959	8	6	Remove
Box elder	4958	7	5	Remove
American elm	4957	13	6	Remove
American elm	4956	9	6	Remove
American elm	4955	9	5	Remove
Bur oak	4954	35	3	Remove
White oak	4953	6	8	Remove
American elm	4952	7	5	Remove
Bur oak	4951	27	6	Remove
Green ash (red ash)	4950	6	7	Remove
American elm	4949	8	5	Remove
Bur oak	4948	28	3	Remove
Bur oak	4947	22	3	Remove
American elm	4946	6	5	Remove
American elm	4945	6	3	Remove
American elm	4944	6	4	Remove
Bur oak	4943	28	3	Remove
American elm	4942	7	5	Remove
American elm	4941	7	3	Remove
Bur oak	4940	40	1	Remove
American elm	4939	10	5	Remove
White oak	4938	6	7	Remove
White oak	4937	6	7	Remove
White oak	4936	6	7	Remove
White oak	4935	6	4	Remove
White oak	4934	6	4	Remove
White oak	4933	7	7	Remove
White oak	4932	6	4	Remove
Box elder	4931	8	5	Remove
White oak	4930	29	2	Remove
White oak	4929	8	5	Remove
White oak	4928	30	5	Remove
Bur oak	4927	20	5	Remove
Box elder	4926	7	4	Remove
American elm	4925	6	4	Remove
White oak	4924	6	7	Remove
White oak	4923	53	1	Remove
White oak	4922	6	2	Save
White oak	4921	6	2	Save
American elm	4920	7	5	Save
White oak	4919	6	6	Save
White oak	4918	6	6	Save
American elm	4917	7	5	Save
White oak	4916	7	5	Save
American elm	4915	8	5	Save
White oak	4914	9	5	Save
Bur oak	4913	25	7	Save
Bur oak	4912	28	7	Save
Box elder	4911	10	5	Save
American elm	4910	6	4	Save
Bur oak	4909	26	7	Save
Bur oak	4908	33	0	Save
American elm	4907	7	4	Remove
Box elder	4906	8	4	Remove
Hackberry	4905	7	5	Save

Notes:
1. Existing conditions and tree inventory data taken from Premier Land Surveying, LLC survey dated 5/23/18.
2. Tree inventory data furnished by Soil Investigation & Design, INC.
3. See Landscape Plan for proposed trees.

The only easements shown are from plats of record or information provided by client.

FIELD BY: OTHERS
DRAWN BY: ABL
CHECKED BY: GRP

I certify that this plan, specification, or report was prepared by me or under my direct supervision and that I am a duly Licensed land Surveyor under the laws of the State of Minnesota.
Prepared this 8th day of April 2022.
Signed: Gregory R. Prasch
Gregory R. Prasch Registration No. 24992

REVISIONS	
04.21.22	ADDED TREES 1816-1839

DEMARC
LAND SURVEYING & ENGINEERING
7601 73rd Avenue North (763) 560-3093
Minneapolis, Minnesota 55428 Demarcinc.com

TCO DESIGN
P.O. BOX 41790
PLYMOUTH, MN 55441

CANTISSIMO OF CHASKA

Address: Xxx Hundertmark Rd. Chaska, MN

Property located in Section 28, Township 116, Range 23, Carver County, Minnesota

TREE PRESERVATION SURVEY

PROJECT: 89556
FB No: -
SHEET NO. 1 OF 1

I:\Survey\23-116-23\chaska asseted living\02 Engineering - 89556\01 CAD\01 Source Files\01 Proposed Linework.dwg



BUILDING FLOOR PLAN

SCALE 1" = 10.0'

0 1 2 3 4 6 8 10 14 18 26

JIM MACKEY ARCHITECT

JIM MACKEY ARCHITECT
1723 LaFond Avenue
St. Paul, MN 55104

Jim Mackey
Office 651-644-0869

registration # 23018

Drafting by
Todd Ofathun
Office 763-424-3676
Cell 952-854-8716

todd@tcodesign.net

Plan Date
FP APPL. 4-15-22

CANTIGNIMO OF CHASKA

PID# 300280330 (PIONEER TRAIL AND HUNDERTMARK ROAD), CHASKA

TCO DESIGN
drafting and home design

P.O. Box 41730
Plymouth, MN 55441

dedication to excellence

Prepared by
Todd Ofathun
Office 763-424-3676
Cell 952-854-8716

todd@tcodesign.net

Design #
tco202104

FLOOR PLAN
A2.1



1 A3.1 **SOUTH ELEVATION (WEST WING) (FRONT OF BUILDING)**

SCALE 1/8" = 1'-0"

0 1 2 3 4 6 8 10 14 18 26



3 A3.1 **EAST ELEVATION (RIGHT SIDE OF BUILDING)**

SCALE 1/8" = 1'-0"

0 1 2 3 4 6 8 10 14 18 26

EXTERIOR MATERIALS:

ROOFING - 'GAF TIMBERLINE' NATURAL SHADOW OR EQUAL

SOFFIT MATERIAL - 'SMARTSIDE 190 SERIES' OR EQUAL

SIDING MATERIAL AT GABLES - 'LP SMARTSIDE' 0.375"X11.69"X47.94" CEDAR TEXTURE SHAKES OR EQUAL

SIDING MATERIAL ABOVE STONE - 'LP SMARTSIDE' 38 SERIES CEDAR TEXTURE LAP (6TRAND) (0.315"X1.84") OR EQUAL

EXTERIOR TRIM - 'LP SMARTSIDE' 540 SERIES REVERSIBLE TRIM (0.910") OR EQUAL

MANUFACTURED STONE - 'URESTONE' STACKED STONE OR EQUAL



2 A3.1 **SOUTH ELEVATION (EAST WING) (FRONT OF BUILDING)**

SCALE 1/8" = 1'-0"

0 1 2 3 4 6 8 10 14 18 26

NOTE: 100% OF EXTERIOR MATERIALS QUALIFY AS CLASS I PER ZONING ORDINANCE SECTION 9.11.4.1
PERMITTED MATERIALS - MULTI FAMILY RESIDENTIAL:
II) NATURAL STONE
III) GLASS
IV) LP SMARTSIDE LAP SIDING



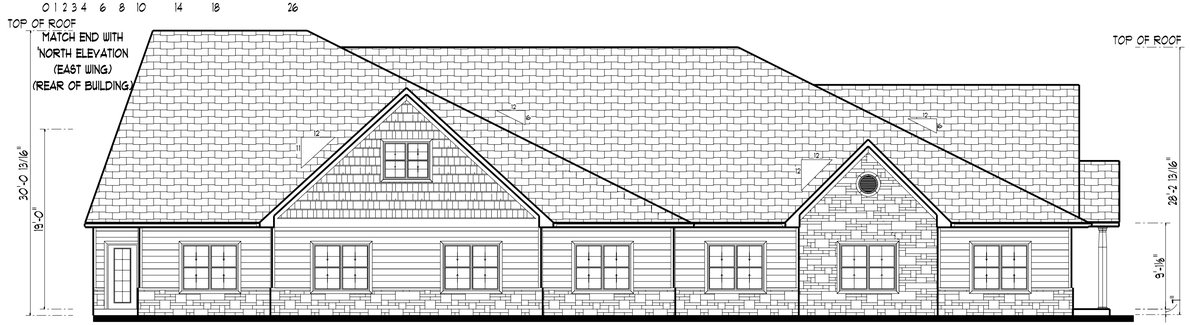

4 A3.1 **WEST ELEVATION (LEFT SIDE OF BUILDING)**

SCALE 1/8" = 1'-0"

0 1 2 3 4 6 8 10 14 18 26



5 A3.1 **NORTH ELEVATION (WEST WING) (REAR OF BUILDING)**

SCALE 1/8" = 1'-0"

0 1 2 3 4 6 8 10 14 18 26

EXTERIOR MATERIALS:

ROOFING - 'GAF TIMBERLINE' NATURAL SHADOW OR EQUAL

SOFFIT MATERIAL - 'SMARTSIDE 190 SERIES' OR EQUAL

SIDING MATERIAL AT GABLES - 'LP SMARTSIDE' 0.375"X11.69"X47.94" CEDAR TEXTURE SHAKES OR EQUAL

SIDING MATERIAL ABOVE STONE - 'LP SMARTSIDE' 38 SERIES CEDAR TEXTURE LAP (6TRAND) (0.315"X1.84") OR EQUAL

EXTERIOR TRIM - 'LP SMARTSIDE' 540 SERIES REVERSIBLE TRIM (0.910") OR EQUAL

MANUFACTURED STONE - 'URESTONE' STACKED STONE OR EQUAL

6 A3.1 **NORTH ELEVATION (EAST WING) (REAR OF BUILDING)**

SCALE 1/8" = 1'-0"

0 1 2 3 4 6 8 10 14 18 26

JIM MACKEY ARCHITECT

JIM MACKEY ARCHITECT
1723 LaFond Avenue
St. Paul, MN 55104

Jim Mackey
Office 651-644-0869

registration # 23018

Drafting by
Todd Ofathun
Office 763-424-3676
Cell 952-854-8716
todd@tcodesign.net

Plan Date
FP APPL. 4-15-22

CANTIGNY OF CHASKA

PID# 300280330 (PIONEER TRAIL AND HUNDERTMARK ROAD), CHASKA

TCO DESIGN
drafting and home design

P.O. Box 47760
Plymouth, MN 55447

dedication to excellence

Prepared by
Todd Ofathun
Office 763-424-3676
Cell 952-854-8716

todd@tcodesign.net

Design #
tco202104
EXTERIOR ELEVATIONS
A3.1

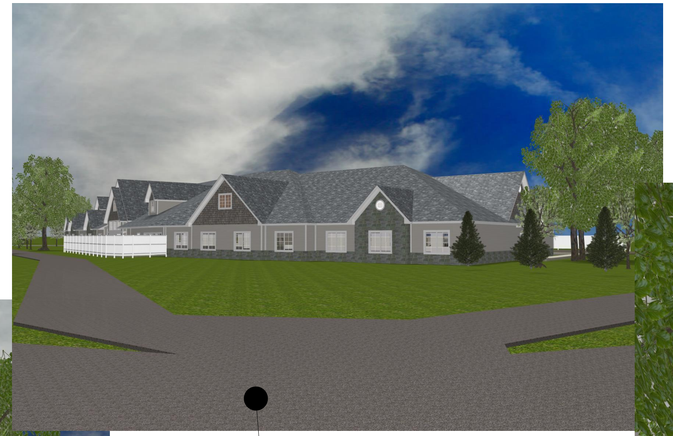

NORTH SIDE AS VIEWED FROM THE CORNER OF PIONEER TRAIL AND HUNDERTMARK ROAD



WEST ENTRY AS VIEWED FROM HUNDERTMARK ROAD



NORTH SIDE PATIO AS VIEWED FROM PIONEER TRAIL



EAST ENTRY AS VIEWED FROM PIONEER TRAIL



MAIN ENTRANCE VIEW FROM HUNDERTMARK ROAD

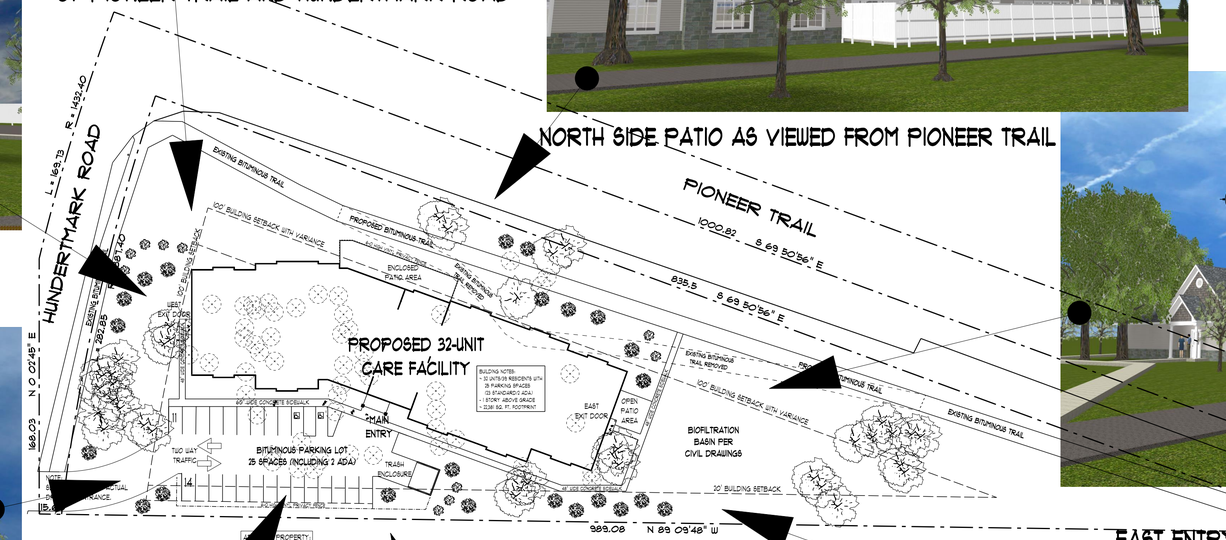

RENDERINGS REFERENCE SITE PLAN

SCALE 1" = 50.0'



MAIN ENTRY AS VIEWED FROM PIONEER POINTE



VIEW OF THE SOUTHEAST CORNER

JIM MACKEY ARCHITECT

JIM MACKEY ARCHITECT
1723 LaFond Avenue
St. Paul, MN 55104

Jim Mackey
Office 651-644-0869

registration # 23018

Drafting by:
Todd Ofthun

Office 763-424-3676
Cell 952-994-8716

todd@tcodesign.net

Plan Date
FP APPL. 4-15-22

CANTIGNY OF CHASKA

PID# 302080330 (PIONEER TRAIL AND HUNDERTMARK ROAD), CHASKA

TCO DESIGN
drafting and home design

P.O. Box 41730
Plymouth, MN 55441

dedication to excellence

Prepared by:
Todd Ofthun
Office 763-424-3676
Cell 952-994-8716

todd@tcodesign.net

Design #
tco202104

EXTERIOR RENDERINGS

A3.2

REQUEST FOR ACTION
CHASKA PLANNING COMMISSION
06/08/2022

Subject: **Ensconced Woods (Carlson & Robling) – Final Plat**

Applicant: Johnson-Reiland Builders and Remodelers

Location: 3675 Big Woods Blvd (Carlson) and 3625 Big Woods Blvd (Robling); South of County Road 44 (Big Woods Blvd) and east of Founders Ridge

Case No.: 2022-37

Synopsis: Applicant seeks to obtain approval of a 29 lot development (28 new lots, 1 lot for the existing Robling residence) on approximately 25 acres of land on Carlson and Robling's land

Prepared By: Elizabeth Hanson

Staff Recommendation: Motion to recommend approval

BACKGROUND

Founders Ridge was approved in November 2013 and the 2nd addition in February 2015. The development has since been fully built. Within that development stub streets were provided to access neighboring properties for future development. One of those streets is Founders Path, which stubs up to the east edge of the development abutting Linda Carlson's property.

May of 2021, the Concept Plan was approved for Ensconced Woods, which included both Carlson (north of the ravine) and Robling's properties. In March 2022, the Preliminary Plat and Rezoning were approved for Ensconced Woods.

Project Goals

The identified goals in creating this new neighborhood include the following:

- Create a new neighborhood on a developable piece of property that has utilities and right-ofway access available.
- Provide a unique, larger lot opportunity for high-end custom homes.
- Save as many trees as possible while still meeting the minimum comprehensive plan density range.
- Maintain the creek and wooded slopes in an easement to be conserved in perpetuity.
- Design this new neighborhood with a sense of community and connection.
- Create a development for a unique, high-end housing product that stands out in its custom designs while at the same time fits into Chaska's sense of community and small-town values.

Changes Since Concept Plan Approval

The following are changes that have occurred on the plan since Concept Plan:

- Lot count changed from 30 lots to 29 lots; one lot was eliminated from the overall plan to help save more trees

- Lot sizes reduced to 75 feet versus 80 feet; this change allowed the cul de sac design to be pulled back roughly 50 feet from the easterly edge, allowing the preservation of more trees on the southeasterly edge.
- Robling Driveway on CR44 eliminated; the Robling driveway currently located on County Road 44/Big Woods Boulevard will be eliminated per Carver County requirements. A new driveway access will be provided from the proposed public street section in the development.
- Private Drive serving 4 lots eliminated; the previous concept plan showed a private drive off the public street that would access 4 lots. Staff advised to eliminate this private drive as it would create more nuances with public utilities under a private road.

Comprehensive Plan

The Comprehensive Plan guides this area to be Low Density Residential. The proposal tonight is consistent with this guidance.

CURRENT PROPOSAL

The request is for Final Plat. The 29-lot detached single-family proposal on approximately 25-acres of property is located south of County Road 44 (Big Woods Blvd) and east of the Founders Ridge development on both Carlson and Robling's land. Only the area on the north side of the creek is proposed to be developed for both Carlson and Robling. The area south of the creek on Linda Carlson's land will be retained by Linda Carlson for future development; the area south of the creek on the Robling land is wooded steep slope and won't be further developed. This new development will be an extension off Founders Path, but will not be part of the Founders Ridge development.

Adjacent properties

The site is bound on the north by County Road 44 (Big Woods Boulevard) and the Guardian Angels Cemetery; to the west by Founders Ridge; the south by additional Carlson owned land and the Lano Gravel Pit; and the east by residential.

Existing Conditions

The Carlson property consists of about 30 Acres of wooded, rolling terrain, with one wetland and a creek dividing the property in half. There is currently a home and outbuildings on the property, all of which will be removed at the time of development. Only the roughly 15 acres on the north side of the creek is proposed to be developed at this time.

Of the 15-acre survey area of the Carlson property, approximately 12 acres is in woodland or forest cover of varying types. The remainder of the property includes the home surrounded by landscape trees, open grassland with a few scattered trees, and the wetland in the central part of the property. The woodlands consist of three cover types and include: altered, non-native woodland, big woods forest, and planted evergreen trees. There is wooded steep slope present just north of the creek and additionally south of Big Woods Boulevard. These delineations were defined shortly after Concept Plan approval was done in 2020.

A wetland is located in the north, central part of the property in a closed depressional area. This wetland is mainly an open water body with a narrow fringe of fresh wet meadow that is dominated by reed canary grass. The floating plant lesser duckweed was observed across much of the open water part of the wetland at the time of the survey in early May of 2020. The

applicant has not been able to do an official wetland report yet. Staff would require that a wetland delineation report be completed and provided at time of their preliminary submittal.

The Robling property consists of 10 acres of wooded, rolling terrain with a creek running along the south boundary. There is an existing dwelling on the northwest portion of the property, which gains driveway access from Big Woods Boulevard. This dwelling and driveway will remain as is. The slopes going down to the creek will be left undisturbed so as to maintain the nice views to the south. The woodlands consist of primarily southern mesic maple-basswood forest and scattering of large trees. Wooded steep slope exists on the areas just north of the creek, north of the existing pond, and the northeast portion of the property.

Land Use
The proposed 25-acre plan consists of 28 new single family lots (29 lots if including Robling's existing residence and lot) with a lot size averaging 75 feet wide with a minimum lot area of 9,000 square feet (~0.21 acres). The dimensions are generally similar to the homes in Founders Ridge that average out to be 75-80 feet wide and approximately 0.25 acres.

The parcels of land that this development encompasses are currently zoned PRD-81, which is Planned Residential Development (PRD).

Layout
Due to its natural topography and the creek the Carlson property is divided north and south. The North portion is proposed to be developed first due to its proximity to road stubs and utilities. The South portion will likely wait until development south of Founders Ridge occurs.

The layout of the site will come from the extension of Founders Path to the west from Founders Ridge. The road will travel easterly until the eastern limits where it will terminate into a cul de sac on the eastern limits of Robling's land. A cul de sac is proposed as a north-south extension off of Founders Path on the northwest portion of the Carlson site. These roads will provide access to 29 lots. The Robling residence will remove their access on the County Road and stub into the new public street system.

Transportation/ROW/Construction Traffic
The final plan proposes to provide for a network of internal residential roadways with connectivity to arterial roadways. Specifically, Founders Path is extended to the east to provide access to the development area. Founders Path will terminate into a cul de sac near the eastern edge of the Robling property. Another cul de sac is proposed just north of Founders Path on Carlson's side. The existing driveway access on Big Woods Boulevard (CR 44) for Carlson's site will be removed and all access will come from Founders Path for the new development and existing Robling property.

The current concept plan appears to show road right-of-way widths that are consistent with the City's typical 60 foot wide ROWs as they are matching up with the stub street of Founders Path.

Construction traffic is proposed to come from the existing Carlson driveway access which comes off of Big Woods Boulevard. The developer will have to work with the City Engineer and Carver County to obtain the necessary permits and regulations.

Utilities
Sewer and water utilities are available.

Stormwater
Stormwater ponding is proposed as a part of this proposal; 4 ponding areas have been delineated on the plan. Adequate maintenance accesses are shown into these areas and on separate outlots. Stormwater ponding will have to meet all Carver County WMO and City standards.

Setbacks
Minimum setbacks proposed are front setbacks of 25 feet, rear setbacks of 25 feet, side setbacks of 7.5 feet, and corner setbacks are 15 feet.

In addition to the above, the development must meet the following setbacks:

SETBACKS	
Direction	**Setback**
Wooded Steep Slopes	50 feet building setback and 30 feet no grade/no mow setback
Wetlands	30 feet
County Road 44	125 feet from centerline

Architecture & Anti Monotony
Johnson-Reiland Builders and Remodelers will be the sole builder in this development. They are a custom-home builder offering homes starting in the upper $600,000 price range.

City ordinance dictates that housing may not be similar within two houses to each side, directly across the street or diagonal from the house in question. This ordinance also requires that homes provide LP Smartside on the front elevations, at least 4 inch window trim on all windows, and provide varied color packages on homes within one home on each side and directly across the street. In addition, 360 architecture will be required on homes/elevations on corners and/or homes/elevations that abut major roadways. This ordinance has been very successful in other newer residential developments.

The following lots were subject to 360 degree architecture per the final plat drawing of the full development:

- Lots 1 & 8, Block 1
- Lot 2, Block 2
- Lot 2, Block 5

Trails & Sidewalks
There are no trails proposed as a part of this development nor are there trails called out for this area in the Comprehensive Plan. Because of this the developer will be required to pay trail fees, which will be wrapped into the Developer's Agreement. A public trail has been extended

on the north side of Big Woods Boulevard to the Highway 212 intersection when construction on County Road 44 was completed.

The developer will be required to provide sidewalks on both sides of the streets up to the bulbs of cul de sacs per City policy. The developer shows this in their final submittal.

Screening, Landscaping & Tree Preservation

Because this development abuts a major roadway (Big Woods Boulevard; CR 44) it will be important that the homes that back up to this use have adequate screening. The site currently contains a rich vegetative buffer on the County Road that the plans are showing to keep a majority of; the existing Carlson driveway creates a small gap between the trees, which the plans are showing to fill in. The Carlson side will provide a buffer to the County Road from the existing home and wooded steep slope area.

Trees will be required in the boulevard in order to meet the City's Boulevard Tree Policy. It should be noted that the boulevard is the area between the sidewalk and the street.

Tree Preservation will be an important piece of this development. The applicant has conducted and submitted a tree survey as a part of this proposal. The woodlands consist of four cover types and include: altered/non-native woodland, big woods forest, planted evergreen trees and southern mesic maple-basswood forest.

Altered, Non-Native Woodland

This tree cover type occupies approximately 7.28 acres of the 14.5-acre survey area and is made up of trees that are relatively younger in age (40-60 years old) and are likely volunteer trees that have established over the years as the site was altered for pasturing and typical farming use. Trees that are found growing in this type of woodland include: box elder, American elm, green ash, silver maple, black walnut, quaking aspen, cottonwood, hackberry, and black cherry. This tree cover is situated mainly in the center and northern parts of the site.

Big Woods Forest

This tree cover type occupies approximately 3.95 acres of the 14.5-acre survey area and is made up of trees that range in age from young to large, mature trees that are part of the original forest cover type I this part of Chaska. In general, this forest type is relatively undisturbed and was likely not utilized for pasturing and typical farming activities. Trees that are found growing in this type of forest include: sugar maple, northern red oak, basswood, bur oak, hackberry, American elm, and black cherry. This tree cover is situated mainly in the southeast portion of the site and along the bluff edge.

Planted Evergreen Trees

This tree cover type occupies approximately 0.79 acre of the 14.5-acre survey area and is made up of trees that range in age from young to mature trees that were planted sometime in the past by the land owner. Trees that are found growing in these planted areas include: red pine, red cedar, and white spruce. This tree cover area is situated mainly in the northwest and south portions of the site.

Southern Mesic Maple-Basswood Forest

The Southern Mesic Maple-Basswood Forest cover type is made up of young to mature deciduous trees that are typical of this native plant community. This plant community is commonly found associated with ravines with moderate to steep slopes in this part of Carver County along the Minnesota River valley. In general, the forested area on-site of the Robling property, consists of occasional large diameter trees with a DBH of greater than 20" (10.8% of all trees inventoried) with a moderate amount of medium-sized trees with a DBH ranging from 11-20" (33.5% of all trees inventoried) and a large number of smaller trees with a DBH ranging from 4-10" (55.7% of all trees inventoried). The larger trees found throughout this native plant community onsite are mainly bur oak with sugar maple, red oak, basswood, and hackberry. The subcanopy includes bur oak, sugar maple, hackberry, American and red elm, and basswood. The sapling to small tree strata includes almost all sugar maple with a few other tree species like basswood and ironwood. Throughout the forested areas on-site, the shrub layer was sparse with only an occasional common buckthorn or honeysuckle shrub.

The developer is showing areas for tree preservation, mainly along the edges of the site and around the wetland. From staff's perspective, the areas encompassed by Big Woods Forest and Southern Mesic Maple-Basswood Forest noted above should receive priority for preservation. The trees in this area are larger and more significant than the other areas, which is primarily on the Robling lot; these tree areas have also been more established on the property over time (see historical aerial comparisons below).

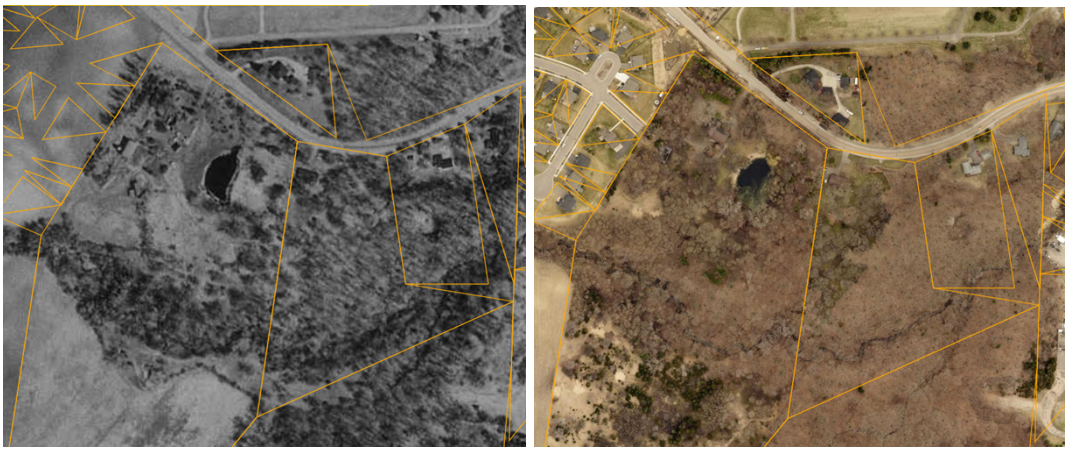

Historic Aerials (1991 to left; 2020 to right)

Approximately 2,200 trees were surveyed on the site. Of the inventoried trees approximately 1,350 trees will be saved, which amounts to 61% of the total trees. The Robling Property is fully wooded with a total of about 7 acres of Southern Mesic Maple-Basswood Forest and 2.6 acres of Scattered Large Trees that were planted as part of the Robling yard. Of the 7 acres of Mesic Forest, 2.7 acres is steep slope that will remain untouched. A total of 2.8 additional acres of Mesic Forest will be saved outside of the steep slopes for a total of 5.5 acres of saved Mesic Forest. Of the 2.8 acres of Mesic Forest saved outside of steep slopes, 0.9 acre is located north of the creek, 1.9 acres is located south of the creek. A total of about 1.5 acres of Mesic Forest (21%) will be removed for development.

The areas slated for tree preservation on the site appears generally consistent with the previous concept plan approved in 2021; more trees are saved with this new plan however. The street

section and required ponding will unfortunately disrupt a handful of trees. The trees along Robling's residence and on the north side of the site are shown to be preserved. The one exception is the required Robling driveway that will come from the new street section will eliminate some trees. Perimeter trees along the rear portions of the lots are the prime areas for preservation and are shown in a couple areas on the site. These areas encompass the Southern Mesic Maple-Basswood Forest area that is noted as the most significant trees on the site.

With the elimination of the private drive that was shown on the concept plan, more trees are preserved around the wetland area and Robling home. In addition, the cul de sac has been pulled back from the easterly lot line. Doing so provides additional tree preservation near the southeasterly portion of the site. This area also encompasses the Southern Mesic Maple-Basswood Forest area.

Parkland
Parkland is not proposed as a part of this development, nor does the Comprehensive Plan guide a park in this area. It will be required of the developer to pay park dedication fees.

Development Costs (Infrastructure Improvements)
The City of Chaska has a number of area-wide development cost such as, but not limited to:

- Arterial Road Network
- Collector Roads
- Storm Sewer
- Trails
- Parks

Prior to final platting, the developer will need to work with City Staff to determine which of these are applicable and what those fees will be.

Final Plat
The site is proposed to be platted into 29 single-family lots. There are a number of outlots as well, and their dispositions are as follows:

- Outlot A: wetland and tree preservation to be dedicated to the City of Chaska
- Outlot B: stormwater ponding to be dedicated to the City of Chaska
- Outlot C: stormwater ponding to be dedicated to the City of Chaska
- Outlot D: bluff area to be dedicated to the City of Chaska
- Outlot E: stormwater ponding to be dedicated to the City of Chaska
- Outlot F: stormwater ponding to be dedicated to the City of Chaska
- Outlot G: bluff area to be dedicated to the City of Chaska
- Outlot H: land to be deeded to the property owner (Carlson's)

Deadline for Agency Actions
The City of Chaska received the complete application for this request on Tuesday, May 3, 2022. Pursuant to Minnesota State Statutes the City must act on this request by **Saturday, July 2, 2022** (60 days), unless the City provides the petitioner with written reasons for an additional 60-day review period. The additional review period would extend to *Wednesday, August 31, 2022*. The City may with the petitioners consent extend the review period beyond the

Wednesday, August 31, 2022. Lastly, if the City denies the petitioners request "… it must state in writing the reasons for the denial at the time it denies the request."

PLANNING COMMISSION ACTION REQUESTED:

Motion to recommend to City Council approval of the Ensconced Woods Final Plat for a 29-lot subdivision on 25 acres of land, subject to the following conditions:

1. Approvals shall be based on the following graphic exhibits:
    a. Cover (pg 1.10), prepared by Pioneer Engineering, dated May 3, 2022
    b. Legend (pg 1.20), prepared by Pioneer Engineering, dated May 3, 2022
    c. Stormwater Pollution Prevention Plan (pgs 2.10-2.13), prepared by Pioneer Engineering, dated May 3, 2022
    d. Removal Plan & Construction Access (pg 3.10), prepared by Pioneer Engineering, dated May 3, 2022
    e. Overall Grading Plan (pg 4.00), prepared by Pioneer Engineering, dated May 3, 2022
    f. Grading Plan (pgs 4.10 & 4.11), prepared by Pioneer Engineering, dated May 3, 2022
    g. Erosion Control Plan (pgs 5.10 & 5.11), prepared by Pioneer Engineering, dated May 3, 2022
    h. Topsoil Plan (pg 6.10), prepared by Pioneer Engineering, dated May 3, 2022
    i. Seeding Plan (pg 7.10), prepared by Pioneer Engineering, dated May 3, 2022
    j. Wetland Buffer & Upland Preservation Plan (pg 8.10), prepared by Pioneer Engineering, dated May 3, 2022
    k. Grading Details (pgs 9.10 & 9.11), prepared by Pioneer Engineering, dated May 3, 2022
    l. Sanitary Sewer & Watermain Plan (pgs 10.10 & 10.11), prepared by Pioneer Engineering, dated May 3, 2022
    m. Storm Sewer Structure Schedule (pg 11.10), prepared by Pioneer Engineering, dated May 3, 2022
    n. Street & Sump Line Draintile (pgs 11.20-11.22), prepared by Pioneer Engineering, dated May 3, 2022
    o. Basin Details (pgs 11.30-11.43), prepared by Pioneer Engineering, dated May 3, 2022
    p. Street Construction (pgs 12.10-12.11), prepared by Pioneer Engineering, dated May 3, 2022
    q. City Details (pgs 13.10-13.15), prepared by Pioneer Engineering, dated May 3, 2022
    r. Landscape Plan (pg L1), prepared by Pioneer Engineering, dated May 3, 2022
    s. Tree Preservation (pgs T1-T6 and E1-T2), prepared by Pioneer Engineering, dated May 3, 2022
    t. Final Plat (pgs 1-4), prepared by Pioneer Engineering
2. Provision that all lot lines are outside of wetland areas and their required buffers.
3. Adherence to the City's Boulevard Tree Policy and local street section design.
4. Provision that boulevard trees are placed between the sidewalk and street.
5. Provision of sidewalks on both sides of all local streets up to the bulb of cul de sacs.
6. Adherence to the following building setbacks:
    a. Front (house): 25 feet
    b. Rear: 25 feet
    c. Side(house/garage): 7.5 feet
    d. Side (corner): 15 feet
7. Adherence to the 125 foot centerline building setback from County Road 44.
8. Prior to final plat approval, developer shall enter into an agreement with the City for the provision of necessary infrastructure and associated development costs.
9. Compliance with the City's anti-monotony and design requirements zoning ordinance (Section 15.28.290).
10. Preservation of the wooded steep slopes, including 30-foot buffer and a 50-foot setback from that wooded steep slope.
11. Provision of developer responsibility to remove any hazardous trees or limbs on site as determined by the Public Works Director, prior to issuance of a building permit.
12. Provision of a storm water management plan meeting City and Carver County WMO standards.

13. Provision of a construction traffic plan to utilize the existing Carlson driveway and in adherence with Carver County requirements.
14. No direct vehicular access onto County Road 44 will be permitted.
15. Provision that 360-degree architecture shall be provided for all corner lots and all lots whose rear or sides are visible from public right's-of-way or across from open spaces, more specifically for these lots as seen in the final plat of Ensconced Woods:
    a. Lots 1 & 8, Block 1
    b. Lot 2, Block 2
    c. Lot 2, Block 5

ENSCONCED WOODS

PLAT FILE NO.
C.R. DOC. NO.

KNOW ALL MEN BY THESE PRESENTS: That Ensconced Woods, LLC, a Minnesota limited liability company, fee owner, of the following described property situated in the County of Carver, State of Minnesota, to wit:

That part of the Northwest Quarter and the North Half of the North Half of the Southwest Quarter of Section 8, Township 115, Range 23, Carver County, Minnesota, described as follows:

Commencing at the northeast corner of the Northwest Quarter of said Section 8; thence on an assumed bearing of South 01 degrees 18 minutes 02 seconds West along the east line of said Northwest Quarter, a distance of 2430.30 feet; thence South 65 degrees 20 minutes 32 seconds West, a distance of 1026.71 feet to the actual point of beginning of tract to be described; thence South 39 degrees 14 minutes 59 seconds West, a distance of 565.15 feet to the north line of the South Half of the North Half of said Southwest Quarter; thence North 88 degrees 57 minutes 33 seconds West, along said north line, a distance of 585.80 feet, to the southeast corner of Outlot D, FOUNDERS RIDGE, according to the recorded plat thereof, said Carver County; thence North 07 degrees 57 minutes 43 seconds East, along the east line of said Outlot D, a distance of 1087.39 feet, to the northeast corner of said Outlot D; thence North 31 degrees 16 minutes 50 seconds East, along the east line of said FOUNDERS RIDGE, a distance of 842.28 feet, to the east line of the West Half of the Northwest Quarter of said Section 8; thence continuing North 31 degrees 16 minutes 50 seconds East, a distance of 49.19 feet, to the centerline of County Road No. 140; thence southeasterly, along said centerline to the intersection with a line that bears North 07 degrees 58 minutes 02 seconds East, from the point of beginning; thence South 07 degrees 58 minutes 02 seconds West, a distance of 1049.52 feet to the point of beginning.

Except that part thereof lying south of the following described line:

Commencing at the southeast corner of said Outlot D; thence North 07 degrees 57 minutes 43 seconds East, along the easterly line of said Outlot D, a distance of 1061.44 feet, to the point of beginning of the line to be described; thence South 59 degrees 39 minutes 01 seconds East, a distance of 129.63 feet; thence South 73 degrees 51 minutes 18 seconds East, a distance of 125.61 feet; thence South 53 degrees 22 minutes 55 seconds East, a distance of 121.30 feet; thence South 70 degrees 22 minutes 56 seconds East, a distance of 63.16 feet; thence South 20 degrees 15 minutes 55 seconds East, a distance of 141.68 feet; thence South 67 degrees 18 minutes 09 seconds East, a distance of 128.30 feet; thence North 80 degrees 59 minutes 37 seconds East, a distance of 119.84 feet; thence North 50 degrees 33 minutes 30 seconds East, a distance of 57.19 feet; thence North 74 degrees 35 minutes 47 seconds East, a distance of 79.84 feet; thence South 37 degrees 31 minutes 18 seconds East, a distance of 62.90 feet to the intersection with a line that bears South 07 degrees 58 minutes 02 seconds West, from the point of beginning and there terminating at the above described parcel.

Together with:

That part of the East Half of the West Half of Section 8, Township 115, Range 23, Carver County, Minnesota, described as follows:

Commencing at the northeast corner of the Northwest Quarter of said Section 8; thence on an assumed bearing of South 0 degrees 18 minutes 00 seconds West along the east line of said Northwest Quarter, a distance of 2370.30 feet; thence South 89 degrees 00 minutes 20 seconds West, a distance of 398.66 feet to a point hereinafter referred to as Point A; thence North 9 degrees 38 minutes 30 seconds West, a distance of 493.15 feet to a point on the center line of County Road No. 140, said point also being the point of beginning of the tract to be described; thence South 9 degrees 38 minutes 30 seconds East, a distance of 493.15 feet to said Point A; thence North 89 degrees 00 minutes 20 seconds East, a distance of 398.66 feet to said east line of the Northwest Quarter of Section 8; thence South 0 degrees 18 minutes 00 seconds West along said east line of the Northwest Quarter of Section 8, a distance of 60.00 feet; thence South 64 degrees 20 minutes 30 seconds West, a distance of 1026.71 feet; thence North 6 degrees 58 minutes 00 seconds East, a distance of 1047.97 feet to said center line of County Road No. 140; thence southeasterly along said center line to the point of beginning.

Has caused the same to be surveyed and platted as ENSCONCED WOODS and does hereby donate and dedicate to the public for public use forever the easements as shown on this plat for drainage and utility purposes only.

In witness whereof said Ensconced Woods, LLC, a Minnesota limited liability company, has caused these presents to be signed by its proper officer this _____ day of _____ , 20_____ .

Ensconced Woods, LLC

_____

_____ as _____

STATE OF MINNESOTA
COUNTY OF _____

The foregoing instrument was acknowledged before me this _____ day of _____ , 20____ , by _____ as _____ of Ensconced Woods, LLC, a Minnesota limited liability company, on behalf of said company.

_____
signature

_____
printed
Notary Public, _____, County, Minnesota

My Commission Expires _____

SURVEYOR'S CERTIFICATE

I Peter J. Hawkinson do herby certify that this plat was prepared by me or under my direct supervision; that I am a duly Licensed Land Surveyor in the State of Minnesota; that this plat is a correct representation of the boundary survey; that all mathematical data and labels are correctly designated on this plat; that all monuments depicted on this plat have been, or will be correctly set within one year; that all water boundaries and wet lands, as defined in Minnesota Statutes, Section 505.01, Subd. 3, as of the date of this certificate are shown and labeled on this plat; and all public ways are shown and labeled on this plat. Dated this _____ day of _____ 20_____ .

_____
Peter J. Hawkinson, Licensed Land Surveyor
Minnesota License No. 42299

STATE OF MINNESOTA
COUNTY OF _____

The foregoing Surveyor's Certificate by Peter J. Hawkinson, Minnesota License No. 42299, was acknowledged before me this _____ day of _____ , 20____ .

_____
signature

_____
printed
Notary Public, _____, County, Minnesota

My Commission Expires _____

CHANHASSEN, MINNESOTA

This plat of ENSCONCED WOODS was approved and accepted by the City Council of the City of Chanhassen, Minnesota at a regular meeting thereof held this _____ day of _____ , 20____ , and is in compliance with the provisions of Minnesota Statutes, Section 505.03, Subdivision 2. All monuments will be set as day of _____ , 20____ , specified by the City Council and as stated on this plat according to Minnesota Statutes Chapter 505.021, Subd. 1.

CITY COUNCIL OF THE CITY OF CHANHASSEN, MINNESOTA

By: _____, Mayor By: _____, Clerk

COUNTY SURVEYOR, Carver County, Minnesota

Pursuant to Chapter 395, Minnesota Laws of 1971, this plat has been approved this _____ day of _____ , 20____ .

By: _____
Brian E. Praske
Carver County Surveyor

COUNTY AUDITOR/TREASURER, Carver County, Minnesota

I hereby certify that taxes payable in _____ and prior years have been paid for land described on this plat. Dated this _____ day of _____ , 20_____ .

By: _____
Crystal Campos, County Auditor

COUNTY RECORDER, Carver County, Minnesota

I hereby certify that this plat of ENSCONCED WOODS was filed this _____ day of _____ , 20_____ , at __ o'clock _____ .M. as Document No. _____ .

By: _____
Kaaren Lewis, County Recorder

COUNTY RECORDER, Carver County, Minnesota

I hereby certify that this plat of ENSCONCED WOODS was filed this _____ day of _____ , 20_____ , at __ o'clock _____ .M. as Document No. _____ .

By: _____
Kaaren Lewis, Registrar of Titles

PIONEER engineering
CIVIL ENGINEERS LAND PLANNERS LAND SURVEYORS LANDSCAPE ARCHITECTS

SHEET 1 OF 4 SHEETS

ENSCONCED WOODS

PLAT FILE NO.
C.R. DOC. NO.

DRAINAGE AND UTILITY EASEMENTS ARE SHOWN THUS:

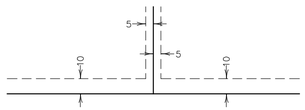

Being 5 feet in width, and adjoining lot lines unless otherwise indicated, and 10 feet in width and adjoining right of way and rear lot lines unless otherwise indicated on the plat.

VICINITY MAP
NO SCALE

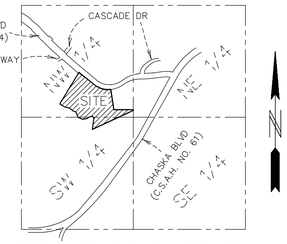

SECTION 08, TWP. 115, RGE. 23
CARVER COUNTY, MINNESOTA

BEARINGS ARE BASED ON THE SOUTH LINE OF SECTION 23, TOWNSHIP 116, RANGE 23, WHICH IS ASSUMED TO HAVE A BEARING OF SOUTH 88°03'46" EAST.

NO MONUMENT SYMBOL SHOWN AT ANY STATUTE – REQUIRED – LOCATION, INDICATES A PLAT MONUMENT THAT WILL BE SET AND WHICH SHALL BE IN PLACE WITHIN ONE YEAR OF THE FILING OF THE PLAT. SAID MONUMENTS SHALL BE 1/2 INCH X 14 INCH IRON MONUMENTS MARKED BY LICENSE NUMBER 42299.

● DENOTES FOUND IRON MONUMENT.

◉

PIONEER engineering
CIVIL ENGINEERS LAND PLANNERS LAND SURVEYORS LANDSCAPE ARCHITECTS

SHEET 2 OF 4 SHEETS

ENSCONCED WOODS

INSET A

PLAT FILE NO.
C.R. DOC. NO.

DRAINAGE AND UTILITY EASEMENTS ARE SHOWN THUS:

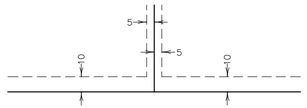

Being 5 feet in width, and adjoining lot lines unless otherwise indicated, and 10 feet in width and adjoining right of way and rear lot lines unless otherwise indicated on the plat.

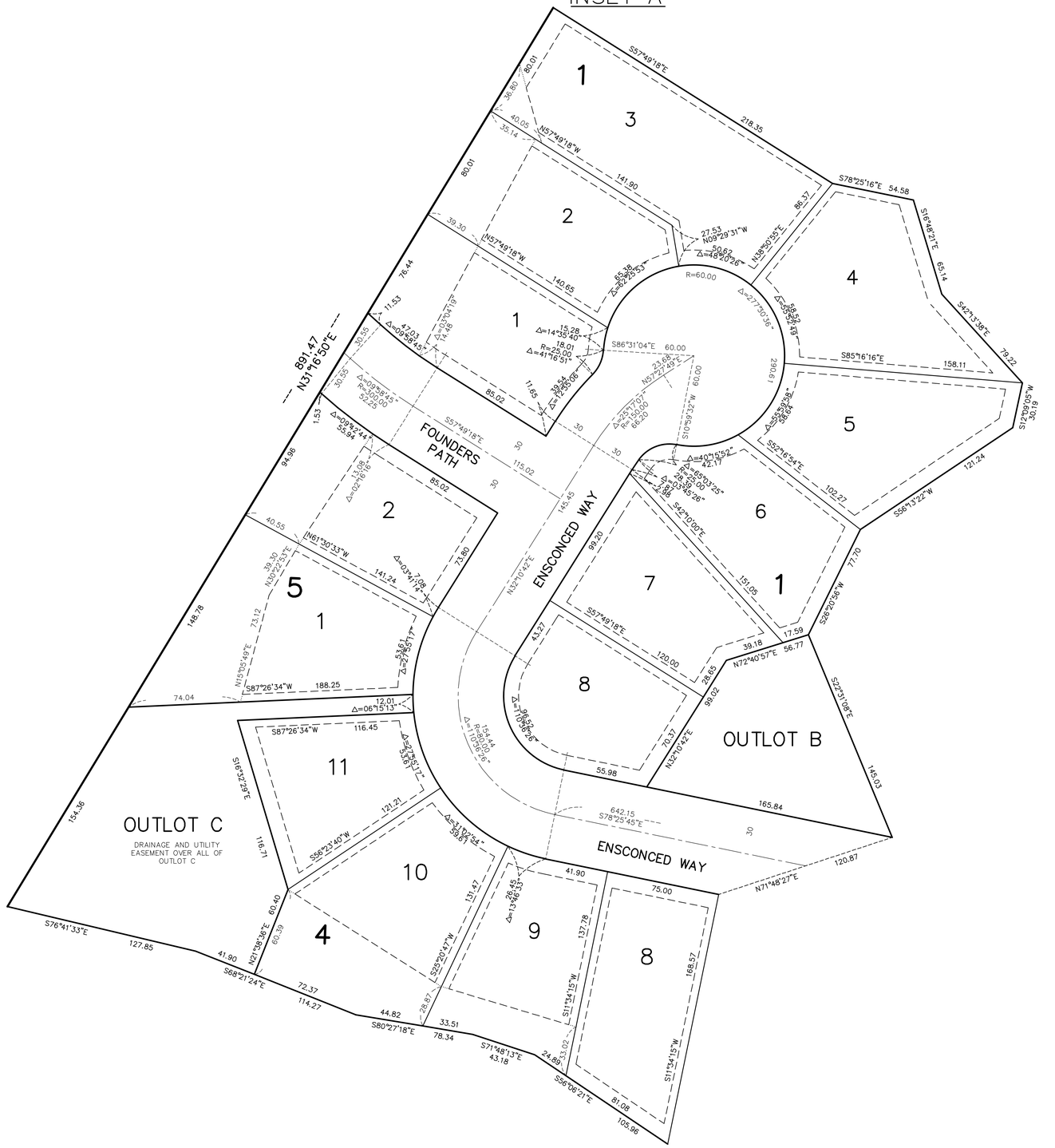

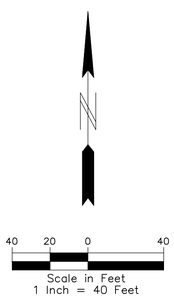

BEARINGS ARE BASED ON THE SOUTH LINE OF SECTION 23, TOWNSHIP 116, RANGE 23, WHICH IS ASSUMED TO HAVE A BEARING OF SOUTH 88°03'46" EAST.

NO MONUMENT SYMBOL SHOWN AT ANY STATUTE – REQUIRED – LOCATION, INDICATES A PLAT MONUMENT THAT WILL BE SET AND WHICH SHALL BE IN PLACE WITHIN ONE YEAR OF THE FILING OF THE PLAT. SAID MONUMENTS SHALL BE 1/2 INCH X 14 INCH IRON MONUMENTS MARKED BY LICENSE NUMBER 42299.

● DENOTES FOUND IRON MONUMENT.

PIONEER engineering
CIVIL ENGINEERS LAND PLANNERS LAND SURVEYORS LANDSCAPE ARCHITECTS

ENSCONCED WOODS

INSET B

PLAT FILE NO.
C.R. DOC. NO.

DRAINAGE AND UTILITY EASEMENTS ARE SHOWN THUS:

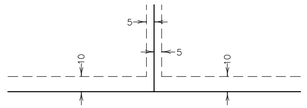

Being 5 feet in width, and adjoining lot lines unless otherwise indicated, and 10 feet in width and adjoining right of way and rear lot lines unless otherwise indicated on the plat.

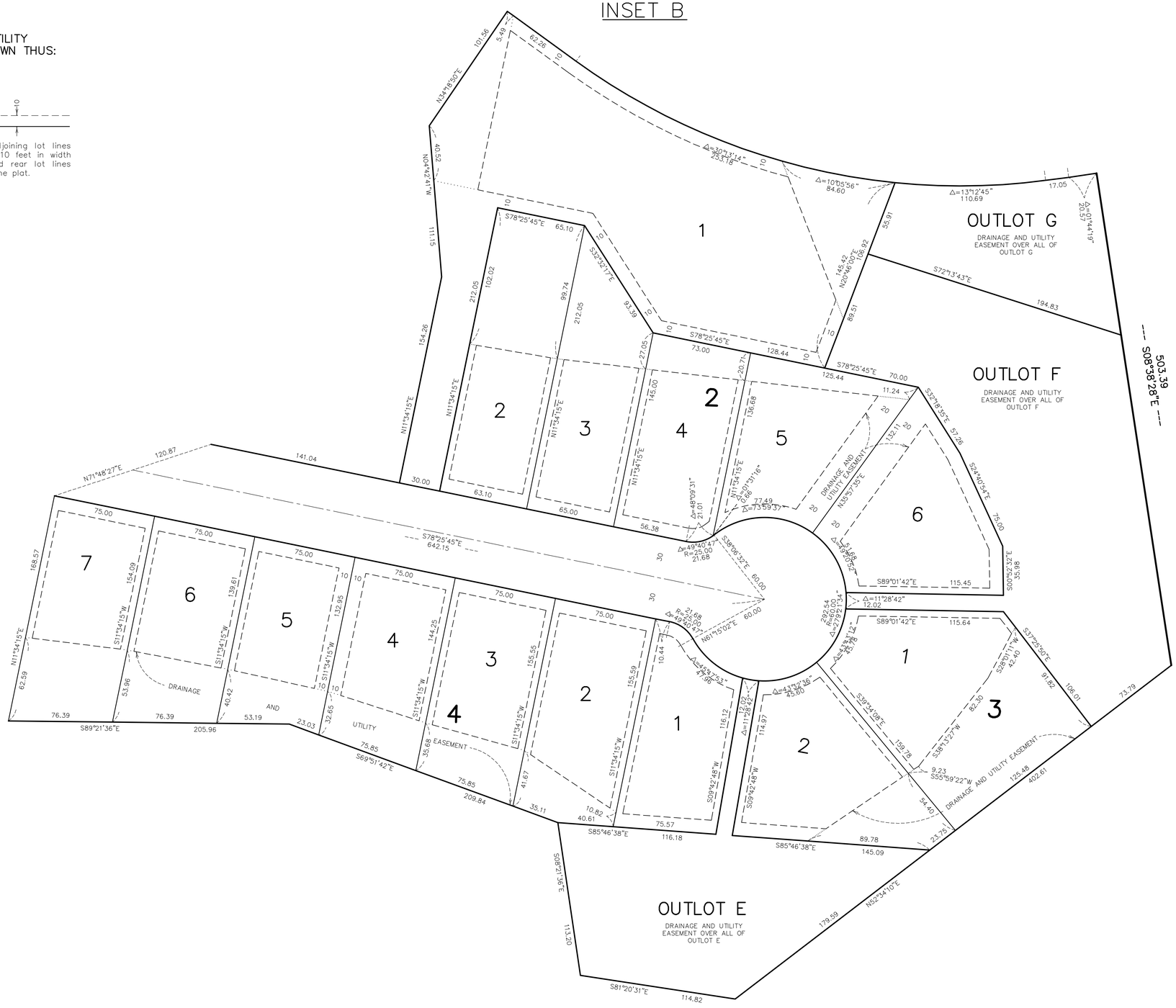

N

40 20 0 40

Scale in Feet
1 Inch = 40 Feet

BEARINGS ARE BASED ON THE SOUTH LINE OF SECTION 23, TOWNSHIP 116, RANGE 23, WHICH IS ASSUMED TO HAVE A BEARING OF SOUTH 88°03'46" EAST.

NO MONUMENT SYMBOL SHOWN AT ANY STATUTE – REQUIRED – LOCATION, INDICATES A PLAT MONUMENT THAT WILL BE SET AND WHICH SHALL BE IN PLACE WITHIN ONE YEAR OF THE FILING OF THE PLAT. SAID MONUMENTS SHALL BE 1/2 INCH X 14 INCH IRON MONUMENTS MARKED BY LICENSE NUMBER 42299.

● DENOTES FOUND IRON MONUMENT.

PIONEER engineering
CIVIL ENGINEERS LAND PLANNERS LAND SURVEYORS LANDSCAPE ARCHITECTS

SHEET 4 OF 4 SHEETS

ENSCONCED WOODS
AREA SKETCH



AREA SUMMARY			
BLOCK 1 =	97,680	SF.	2.2424 AC.
BLOCK 2 =	110,055	SF.	2.5265 AC.
BLOCK 3 =	32,695	SF.	0.7506 AC.
BLOCK 4 =	123,387	SF.	2.8326 AC.
BLOCK 5 =	27,333	SF.	0.6275 AC.
TOTAL LOT AREA =	391,150	SF.	8.9796 AC.
TOTAL OUTLOT AREA =	566,804	SF.	13.0120 AC.
TOTAL R/W AREA =	133,906	SF.	3.0741 AC.
TOTAL AREA =	1,091,860	SF.	25.0657 AC.

PIONEER engineering
CIVIL ENGINEERS LAND PLANNERS LAND SURVEYORS LANDSCAPE ARCHITECTS

ENSCONCED WOODS
GRADING, UTILITY & STREET CONSTRUCTION PLAN
CHASKA, MINNESOTA



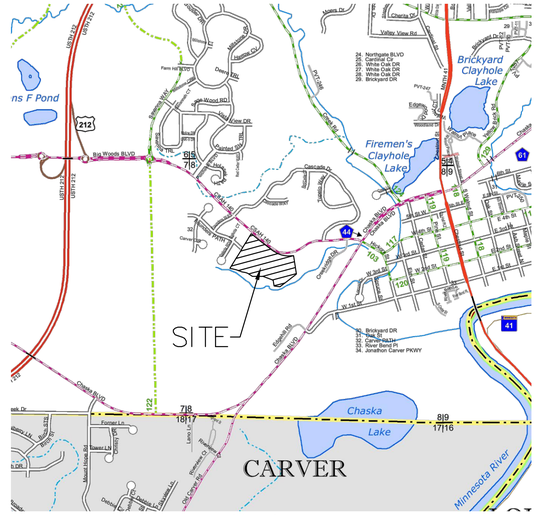
SITE
Brickyard Clayhole Lake
Firemen's Clayhole Lake
Chaska Lake
CARVER
Minnesota River
Big Woods BLVD
Chaska BLVD
Creek Rd
Valley View Rd
Hazeltine Blvd
Engler Blvd
Victoria Dr
Victoria Ct
Northgate BLVD
Cardinal Dr
White Oak DR
White Oak DR
White Oak DR
Brickyard DR
Brickyard DR
Bark St
Comer Path
River Bend Pl
Jonathon Carver PKWY
Pioneer Ln
Pioneer Trail
Lyman Blvd
Meadowood Ct
Chickadee Rd
Dakota Ridge Rd
Moose Hollow Rd
Dakota Ridge Cir
Dakota Ridge Ln
Dakota Ridge Trail
Dakota Ridge Pass
Dakota Ridge Ct
Dakota Ridge Dr
Dakota Ridge Rd

LEGEND

UTILITY LINES

EXISTING	PROPOSED	FUTURE	DESCRIPTION
			SANITARY MANHOLE
			SANITARY SEWER (SANITARY & WATERMAIN PLANS)
			SANITARY SEWER (STORM SEWER PLANS)
FM FM	FM FM	FM FM	FORCE MAIN
			HYDRANT
			GATE VALVE
			REDUCER
			CURB STOP
			WATERMAIN (SANITARY & WATERMAIN PLANS)
			WATERMAIN (STORM SEWER PLANS)
			CATCH BASIN
			BEEHIVE
			STORM MANHOLE
			FLARED END SECTION
			CONTROL STRUCTURE
			STORM SEWER (SANITARY & WATERMAIN PLANS)
			STORM SEWER (STORM SEWER PLANS)
			CULVERT
	PERF	PERF	PERFORATED DRAINTILE
	DT	DT	SOLID DRAINTILE SERVICE
			CASING
e e	e e	e e	UNDERGROUND ELECTRIC LINE
fo fo	fo fo	fo fo	UNDERGROUND FIBER OPTIC LINE
g g	g g	g g	UNDERGROUND GAS PIPELINE
petro	petro	petro	UNDERGROUND PETROLEUM PIPELINE
t t	t t	t t	UNDERGROUND TELEPHONE LINES
tv tv	tv tv	tv tv	UNDERGROUND TELEVISION LINE
oh oh	oh oh	oh oh	OVERHEAD UTILITY LINES

SITE LINES

EXISTING	PROPOSED	FUTURE	DESCRIPTION
			SURMOUNTABLE CURB & GUTTER
			B-STYLE CURB & GUTTER
			RIBBON CURB & GUTTER
			EDGE OF BITUMINOUS
			YELLOW PAVEMENT STRIPING (SINGLE/DOUBLE)
			WHITE PAVEMENT STRIPING (SINGLE/DOUBLE)
			PHASE LINE
			CENTERLINE
902	902	902	2' CONTOUR LINE
900	900	900	10' CONTOUR LINE
	OUTLET=987.0	OUTLET=987.0	BASIN OUTLET LINE
	HWL=900.2	HWL=900.2	BASIN HIGH WATER LINE
	84.3		PROPOSED SPOT ELEVATION
			EMERGENCY OVERFLOW
			DRAINAGE FLOW ARROW
			DELINEATED / PROPOSED WETLAND LINE
BUFFER	BUFFER	BUFFER	WETLAND BUFFER
			TREE LINE
FEMA	FEMA	FEMA	FEMA FLOODPLAIN BOUNDARY
			RETAINING WALL
x x	x x	x x	FENCE (BARBED WIRE)
# #	# #	# #	FENCE (CHAIN LINK)
[] []	[] []	[] []	FENCE (WOOD)
	C		CONSERVATION AREA SIGN
	W		WETLAND BUFFER SIGN
			TYPE III BARRICADE
			LIGHT POLE
			STREET SIGNS
			PEDESTRIAN RAMP

SURVEY LINES

EXISTING	PROPOSED	FUTURE	DESCRIPTION
			BOUNDARY
			RIGHT OF WAY
			LOT LINE
			EASEMENT
			SET BACK LINE
			SECTION LINE
			RESTRICTED ACCESS

HATCH PATTERNS

- GRAVEL SURFACE
- BITUMINOUS SURFACE
- CONCRETE SURFACE
- RIP RAP
- SELECT BACKFILL MATERIAL
- EROSION CONTROL BLANKET MNDOT CATEGORY PER PLAN
- WETLAND
- WETLAND UPLAND BUFFER
- WETLAND MITIGATION
- PERMANENT TURF RESTORATION
- PERMANENT WET BASIN SEEDING
- UPLAND/NATURAL AREA SEEDING

TOPOGRAPHIC SYMBOLS

- CATCH BASIN
- CATCH BASIN BEEHIVE
- FLARED END SECTION
- GATE VALVE
- HYDRANT
- WATER SERVICE
- WELL — WATER WELL
- MONITORING WELL
- CLEANOUT
- HAND HOLE
- MANHOLE OTHER THAN SANITARY OR STORM
- SANITARY OR STORM MANHOLE
- LV — LAWN SPRINKLER VALVE
- LAWN SPRINKLER HEAD
- UTILITY POLE
- T — TRANSFORMER BOX
- FO — FIBER OPTIC BOX
- ELECTRIC BOX
- NATURAL GAS METER
- LIGHT POLE
- SEMAPHORE
- TELEPHONE BOX
- CABLE BOX
- CAST IRON MONUMENT
- FOUND IRON PIPE
- JUDICIAL LAND MARK
- PK NAIL
- CONTROL POINT
- SPIKE
- FLAG POLE
- TEST HOLE
- MAILBOX
- SIGN
- BOLLARD
- CONSERVATION POST
- DECIDUOUS TREE
- CONIFEROUS TREE
- SHRUB / BUSH

EROSION & SEDIMENT CONTROL

- STANDARD EROSION CONTROL
- HEAVY-DUTY EROSION CONTROL
- SECONDARY EROSION CONTROL FENCE
- EROSION CONTROL AT BACK OF CURB
- TREE FENCE
- TEMPORARY DIVERSION DITCH
- CATCH BASIN INLET PROTECTION
- STRAW BIO ROLLS
- ROCK BERM
- SUMPED RIP RAP PERMANENT ENERGY DISSIPATER
- DISCHARGE LOCATION
- GRAVEL CONSTRUCTION ENTRANCE
- TEMPORARY OUTLET FLOATING SKIMMER
- BASIN ACCESS 8% SLOPE MAX.
- STABILIZED EMERGENCY OVERFLOW
- STEEP SLOPE 3:1 (H:V) (33.3%) OR STEEPER GRADE

CURB LEGEND

- 08.15 / 4+46.57 = GUTTERLINE ELEVATION FOR SURMOUNTABLE CURB
- 08.15 T.O. / 4+46.57 = GUTTERLINE ELEVATION FOR SURMOUNTABLE CURB (TIP OUT GUTTER)
- 08.32 / 4+46.57 = GUTTERLINE ELEVATION FOR B618 CURB
- 08.32 T.O. / 4+46.57 = GUTTERLINE ELEVATION FOR B618 CURB (TIP OUT GUTTER)
- 07.82 / 4+46.57 = BITUMINOUS ELEVATION

ABBREVIATIONS

A	ALGEBRAIC DIFFERENCE
B-B	BACK TO BACK
BV	BUTTERFLY VALVE
BOC	BACK OF CURB
BFE	BASE FLOOD ELEVATION
BMP	BEST MANAGEMENT PRACTICE
℄	CENTER LINE
CB	CATCHBASIN
CBMH	CATCHBASIN MANHOLE
CMP	CORRUGATED METAL PIPE
CO	CLEAN OUT
CS	CURB STOP
DIP	DUCTILE IRON PIPE
DT	DRAINTILE
EL/ELEV	ELEVATION
EX	EXISTING
FES	FLARED END SECTION
F-F	FACE TO FACE
FM	FORCEMAIN
GB	GRADE BREAK
GND	GROUND
GV	GATE VALVE
HP	HIGH POINT
HYD	HYDRANT
HWL	HIGH WATER LEVEL
INV	INVERT
K	CURVE COEFFICIENT
L	LENGTH
LF	LOWEST FLOOR
LO	LOOKOUT
LO	LOWEST OPENING
LP	LIQUID PETROLEUM
LP	LOW POINT
MH	MANHOLE
PC	POINT OF CURVATURE
PCC	POINT OF COMPOUND CURVATURE
PI	POINT OF INTERSECTION
P.L.	PROPERTY LINE
PRC	POINT OF REVERSE CURVATURE
PVT	POINT OF TANGENCY
PVC	POINT OF VERTICAL CURVATURE
PVC	POLYVINYL CHLORIDE PIPE
PVI	POINT OF VERTICAL INTERSECTION
R	RADIUS
R	RAMBLER
RCP	REINFORCED CONCRETE PIPE
ROW	RIGHT OF WAY
SSWR	SANITARY SEWER
STA	STATION
STRM	STORM SEWER
SWPPP	STORM WATER POLLUTION PROTECTION PLAN
TNH	TOP NUT HYDRANT
TYP	TYPICAL
WM	WATER MAIN
WO	WALKOUT

LOT INFORMATION

(TYPICAL SECTION NOT TO SCALE)

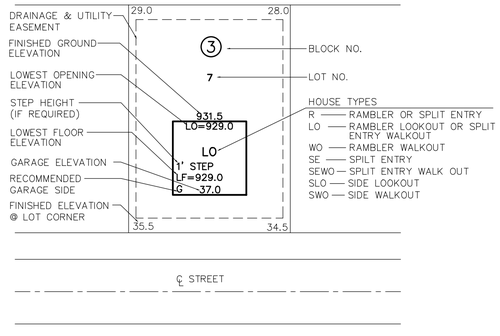

PIONEER engineering
CIVIL ENGINEERS LAND PLANNERS LAND SURVEYORS LANDSCAPE ARCHITECTS
2422 Enterprise Drive
Mendota Heights, MN 55120
(651) 681-1914
Fax: 681-9488
www.pioneereng.com

I hereby certify that this plan was prepared by me or under my direct supervision and that I am a duly Licensed Professional Engineer under the laws of the State of Minnesota

Name: Brian N. Molinaro
Reg. No. 47504 Date 05-03-2022

Revisions

Date	05-03-2022
Designed	NAP
Drawn	BC
Checked	BNM

LEGEND

JOHNSON - REILAND
616 HIGHWAY 3
DUNDAS, MINNESOTA 55019

ENSCONCED WOODS
CHASKA, MINNESOTA

01-ENG-120158-SHEET-LGND

1.20 OF 36

6.B. Recommend Approval of the Final
Page 16 of 59
Packet Page 97 of 570
© 2022 Pioneer Engineering, P.A.

STORMWATER POLLUTION PREVENTION PLAN (SWPPP)

TO COMPLY WITH THE GENERAL STORMWATER PERMIT FOR CONSTRUCTION ACTIVITY

THE FULL SWMP IS A SEPARATE DOCUMENT AVAILABLE UPON REQUEST

CONSTRUCTION ACTIVITY INFORMATION

PROJECT NAME: ENSCONCED WOODS
PROJECT LOCATION:
FOUNDERS PATH & BIG WOODS BLVD
CHASKA, MINNESOTA 55318
CARVER COUNTY
LATITUDE/LONGITUDE: 44.785839, -93.614129

TOTAL PROJECT AREA DISTURBED: 11.5 ACRES
TOTAL EXISTING IMPERVIOUS AREA: 0.7 ACRES
TOTAL PROPOSED IMPERVIOUS AREA: 4.2 ACRES

RECEIVING WATERS:
CHASKA CREEK

DATES OF CONSTRUCTION:
CONSTRUCTION START DATE: MAY 1, 2022 EST. COMPLETION DATE: DECEMBER 1, 2026

CONTACT INFORMATION

PROJECT OWNER
JOHNSON-REILAND
PAUL REILAND – OWNER
616 HIGHWAY 3
DUNDAS, MN 55019
EMAIL: PAUL@JOHNSONREILANDHOMES.COM

CONTRACTOR:

TBD

GENERAL CONSTRUCTION PROJECT INFORMATION

THE CONSTRUCTION OF NEW ROADWAYS, FOUNDERS PATH, AND STREET A, AND 29 LOTS FOR RESIDENTIAL DEVELOPMENT. THIS CONSTRUCTION WILL COMPLETE GRADING, INSTALLATION OF SANITARY SEWER, WATERMAIN, STORM SEWER, CONCRETE CURB AND GUTTER, BITUMINOUS SURFACING, STREET LIGHTING, LANDSCAPING, EROSION CONTROL, AND TURF ESTABLISHMENT.

BASED ON THE SOIL BORINGS THAT WERE RETRIEVED FROM THE SITE, SOILS ENCOUNTERED ON SITE ARE CLAYEY SAND, SANDY LEAN CLAY, AND POORLY GRADED SAND.

GENERAL SITE INFORMATION (III.A)

1. THE PROJECT IS REQUIRED TO MEET THE CONSTRUCTION STORMWATER REQUIREMENTS FOR THE NPDES GENERAL STORMWATER PERMIT AND MNDOT SPEC. 1717, 2573, AND 2575.

2. THE CONTRACTOR SHALL INSTALL TEMPORARY EROSION AND SEDIMENT CONTROL MEASURES PRIOR TO STARTING WORK WITHIN THE APPLICABLE PORTION OF THE SITE.

3. LOCATIONS, TYPE AND QUANTITY OF TEMPORARY AND PERMANENT EROSION CONTROL MEASURES CAN BE FOUND WITHIN THE CONSTRUCTION PLANS.

4. THE PROJECT IS LOCATED WITHIN 1 MILE AND FLOWS TO AN IMPAIRED WATER BODY. THEREFORE, THE PROJECT WILL NEED TO STABILIZE ALL EXPOSED SOILS NO LATER THAN 7 DAYS. DITCHES OR RAVINES THROUGHOUT THE PROJECT THAT ARE DISTURBED SHALL BE STABILIZED WITHIN 24 HOURS.

5. THE CONTRACTOR SHALL INSTALL ADDITIONAL BMP'S AS NECESSARY AS DIRECTED BY THE ENGINEER TO PREVENT SEDIMENT TRANSPORT.

6. INLET PROTECTION, SILT FENCE AND BIOROLLS SHALL BE INSTALLED IN THE FIELD AS SHOWN ON THE PLANS AS DIRECTED BY THE ENGINEER.

THE INTENDED SEQUENCING OF MAJOR CONSTRUCTION ACTIVITIES IS AS FOLLOWS:
1. INSTALL STABILIZED ROCK CONSTRUCTION ENTRANCE
2. INSTALLATION OF SILT FENCE AROUND SITE
3. INSTALL ORANGE CONSTRUCTION FENCING AROUND INFILTRATION AREAS.
4. CLEAR AND GRUB FOR TEMPORARY SEDIMENT BASIN/POND INSTALL.
5. CAN USE PROPOSED BASINS AS TEMP PONDS
6. CLEAR AND GRUB REMAINDER OF SITE
7. STRIP AND STOCKPILE TOPSOIL
8. ROUGH GRADING OF SITE
9. STABILIZE DENUDED AREAS AND STOCKPILES
10. INSTALL SANITARY SEWER, WATER MAIN, STORM SEWER AND SERVICES
11. INSTALL SILT FENCE/INLET PROTECTION AROUND CB'S
12. INSTALL STREET SECTION
13. INSTALL CURB AND GUTTER
14. BITUMINOUS ON STREETS
15. INSTALL SMALL UTILITIES (GAS, ELECTRIC, PHONE, CABLE, ETC.)
16. FINAL GRADE BOULEVARD, INSTALL SEED AND MULCH
17. REMOVE ACCUMULATED SEDIMENT FROM BASIN/POND
18. FINAL GRAD POND/INFILTRATION BASINS (DO NOT COMPACT SOILS IN INFILTRATION AREAS.)
19. WHEN ALL CONSTRUCTION ACTIVITY IS COMPLETE AND THE SITE IS STABILIZED BY EITHER SEED OR SOD/LANDSCAPING, REMOVE SILT FENCE AND RESEED AREAS DISTURBED BY THE REMOVAL.

ENVIRONMENTALLY SENSITIVE AREAS;
WETLANDS – SEE WETLAND APPLICATION FOR IMPACTS, MITIGATION AND ADDITIONAL INFORMATION

IMPAIRED WATERS – CHASKA CREEK, UNNAMED CREED (EAST CREEK) MINNESOTA RIVER.

TMDL – THERE ARE ESTABLISHED TMDL PLANS FOR TURBIDITY, FECAL COLIFORM, MERCURY IN FISH TISSUE, MERCURY IN WATER COLUMN.

20. SCIENTIFIC OR NATURAL AREAS – THERE ARE **NO** SNA WITHIN 1 MILE OF THE PROJECT.

21. KARST AREA – THE PROJECT IS **NOT** LOCATED WITHIN A KARST AREA.

22. CALCAREOUS FENS – THE PROJECT DOES **NOT** DISCHARGE TO A FEN.

TRAINING (21.1)

THE CONTRACTOR SHALL ENSURE THAT THE TRAINING REQUIREMENTS IN PART 21.1 OF THE GENERAL STORMWATER PERMIT FOR CONSTRUCTION ACTIVITY ARE COMPLIED WITH. THE INDIVIDUALS TRAINED WILL BE RECORDED IN THE SWPPP BEFORE THE START OF CONSTRUCTION OR AS SOON AS PERSONNEL FOR THE PROJECT HAVE BEEN DETERMINED.

PROVIDE INFORMATION IN THE SPACE PROVIDED BELOW FOR ADDITIONAL PERSONNEL ON THE PROJECT AS REQUIRED BY THE PERMIT.

NAME	DATE	TRAINING PROGRAM

PERMANENT STORMWATER MANAGEMENT SYSTEM (15.1)

1. THE PROJECT WILL CREATE A NEW CUMULATIVE IMPERVIOUS SURFACE GREATER THAN OR EQUAL TO ONE ACRE. THE PROJECT PROPOSES TO CONSTRUCT A STORMWATER TREATMENT SYSTEM TO COLLECT RUNOFF TO BE DISCHARGED OFFSITE. TREATMENT FOR THE RUNOFF IS TO BE EXECUTED BY THE PROPOSED STORMWATER MANAGEMENT SYSTEM. CALCULATIONS DETAILING THE BASINS ARE AVAILABLE UPON REQUEST.

EROSION PREVENTION PRACTICES (8.1)

1. THE CONTRACTOR SHALL PHASE THE WORK TO LIMIT THE OVERALL DISTURBANCE OF THE PROJECT AT ANY GIVEN TIME.
   NATURAL VEGETATIVE BUFFERS SHALL BE MAINTAINED BETWEEN THE WORK LIMITS AND ALL SURFACE WATERS OR WETLANDS THROUGHOUT THE COURSE OF CONSTRUCTION.

2. THE AREAS NOT TO BE DISTURBED WILL BE DELINEATED THROUGH THE USE OF SILT FENCE, BIOROLLS AND CONSTRUCTION
   STAKING.

3. THE CONTRACTOR SHALL MAINTAIN A NATURAL, VEGETATED BUFFER ADJACENT TO THE WETLANDS WHEREVER POSSIBLE
   DURING CONSTRUCTION.

4. TEMPORARY COVER SHALL BE PROVIDED USING TEMPORARY SEED WITH EROSION CONTROL BLANKET OR HYDROMULCH.

5. PERMANENT COVER SHALL BE PROVIDED AS DETAILED ON THE CONSTRUCTION PLANS USING SEED WITH EROSION CONTROL BLANKET OR HYDROMULCH. PERMITTEES MUST NOT USE MULCH, HYDROMULCH, TACKIFIER, POLYACRYLAMIDE OR SIMILAR EROSION PREVENTION PRACTICES WITHIN ANY PORTION OF THE NORMAL WETTED PERIMETER OF A TEMPORARY OR PERMANENT DRAINAGE DITCH OR SWALE SECTION WITH A CONTINUOUS SLOPE OF GREATER THAN 2 PERCENT

6. THE CONTRACTOR IS REQUIRED TO PROVIDE ANY ADDITIONAL EROSION PREVENTION MEASURES NECESSARY FOR CONFORMANCE TO THE NPDES CONSTRUCTION PERMIT THROUGHOUT CONSTRUCTION.

7. STABILIZATION TIME FRAMES

7.1.	LAST 200 LINEAL FEET OF DITCH OR SWALE	24 HOURS OF CONNECTION TO SURFACE WATERS
7.2.	REMAINING DITCH OR SWALE	7 DAYS
7.3.	PIPE AND CULVERT OUTLETS	24 HOURS
7.4.	EXPOSED SOIL AND STOCKPILES	7 DAYS

SEDIMENT CONTROL PRACTICES (9.1)

1. SILT FENCE AND ALL OTHER DOWN GRADIENT PERIMETER CONTROL DEVICES SHALL BE INSTALLED AS SHOWN ON THE PLAN SHEETS PRIOR TO ANY LAND DISTURBANCE ACTIVITY.

2. EROSION CONTROL BLANKET AND BIOROLLS SHALL BE PLACED WITHIN THE DITCH BOTTOMS WITHIN 24 HOURS AFTER FINE
   GRADING.

3. TEMPORARY STOCKPILES LOCATED ON SITE SHALL BE SEEDED, MULCHED OR BLANKETED AND HAVE SILT FENCE OR A BMP APPROVED BY THE ENGINEER IN THE FIELD PLACED AROUND THE BASE OF THE STOCKPILE.

4. MAINTAIN A 50-FOOT NATURAL BUFFER DOWN GRADIENT OF THE SITE OR REDUNDANT SEDIMENT CONTROLS IF BUFFER IS NOT FEASIBLE, WHEN THE CONSTRUCTION IS WITHIN 50 FEET OF A SURFACE WATER.

5. MINIMIZE SOIL COMPACTION BY NOT DISTURBING AREAS OUTSIDE OF THE CONSTRUCTION LIMITS. DELINEATE AREAS NOT TO BE DISTURBED PRIOR TO STARTING GROUND DISTURBING ACTIVITIES. PRESERVE ALL NATURAL BUFFERS SHOWN ON THE PLANS. NO HEAVY CONSTRUCTION EQUIPMENT ALLOWED IN FILTRATION OR INFILTRATION AREAS PER PLANS.

DEWATERING AND BASIN DRAINING (10.1)

1. DEWATERING IS NOT ANTICIPATED ON THIS PROJECT. HOWEVER, IF DEWATERING IS NECESSARY, THE CONTRACTOR SHALL
   SUBMIT A PLAN TO THE ENGINEER FOR ACCEPTANCE.

2. IF THE DEWATERING OR PUMPING PROCESS IS TURBID OR CONTAINS SEDIMENT LADEN WATER, IT MUST BE TREATED THROUGH THE USE OF SEDIMENT TRAPS, VEGETATIVE FILTER STRIPS, FLOCCULANTS OR OTHER SEDIMENT REDUCING MEASURES SUCH THAT DISCHARGE IS NOT VISIBLY DIFFERENT THAN THE RECEIVING WATER.

3. DISCHARGE DIRECTLY INTO A SURFACE WATER OR WETLAND IS NOT PERMITTED.

4. ALL CONSTRUCTION DEWATERING SHALL BE DISCHARGED TO AN APPROVED LOCATION FOR TREATMENT PRIOR TO DISCHARGE TO THE RECEIVING WATER. THE DEWATERING PLAN SHALL BE DEVELOPED AND SUBMITTED TO THE ENGINEER FOR REVIEW IN ACCORDANCE WITH MNDOT SPEC. 1717.2E.

5. CONDITIONS OF THE SITE MAY REQUIRE A PERMIT TO BE OBTAINED FROM THE MINNESOTA DEPARTMENT OF NATURAL RESOURCES FOR WATER APPROPRIATIONS. THE CONTRACTOR WILL BE RESPONSIBLE FOR OBTAINING ANY NECESSARY PERMITS FOR DEWATERING.

INSPECTIONS AND MAINTENANCE (11.1)

1. THE CONTRACTOR SHALL IDENTIFY A CERTIFIED EROSION AND SEDIMENT CONTROL SUPERVISOR TO CONDUCT WEEKLY SITE INSPECTIONS FOR THE PROJECT.

2. THE CONSTRUCTION SITE SHALL BE OBSERVED AT LEAST ONCE EVERY 7 DAYS DURING ACTIVE CONSTRUCTION AND WITHIN 24 HOURS AFTER A RAINFALL EVENT GREATER THAN 0.5 INCHES IN 24 HOURS AND 7 DAYS AFTER THAT.

3. WHEN SEDIMENT IS OBSERVED UP TO APPROXIMATELY ONE-THIRD OF THE HEIGHT OF SILT FENCE, SEDIMENT SHALL BE REMOVED. SILT FENCE WILL BE REPLACED, OR SUPPLEMENTED IF IT BECOMES NON-FUNCTIONAL.

4. WHEN NON-FUNCTIONAL BMP'S ARE FOUND THEY MUST BE REPAIRED, REPLACED OR SUPPLEMENTED WITH FUNCTIONAL BMP'S WITHIN 24 HOURS OF DISCOVERY OR AS SOON AS FIELD CONDITIONS ALLOW ACCESS.

5. THE CITY OF CHASKA IS RESPONSIBLE TO MAINTAIN PERMANENT BMP'S.

6. INSPECT THE ENTIRE CONSTRUCTION SITE A MINIMUM OF ONCE EVERY SEVEN DAYS DURING ACTIVE CONSTRUCTION AND WITHIN 24 HOURS AFTER A RAINFALL EVENT GREATER THAN 0.5 INCHES IN 24 HOURS. INSPECT ALL TEMPORARY AND PERMANENT WATER QUALITY MANAGEMENT, EROSION PREVENTION AND SEDIMENT CONTROL BMPS UNTIL THE SITE HAS UNDERGONE FINAL STABILIZATION AND THE NOT HAS BEEN SUBMITTED. INSPECT SURFACE WATER INCLUDING DRAINAGE DITCHES FOR SIGNS OF EROSION AND SEDIMENT DEPOSITION. INSPECT CONSTRUCTION SITE VEHICLE EXIT LOCATIONS FOR EVIDENCE OF TRACKING ONTO PAVED SURFACES. INSPECT SURROUNDING PROPERTIES FOR EVIDENCE OF OFF SITE SEDIMENT ACCUMULATION. INSPECT INFILTRATION AREAS FOR SIGNS OF SEDIMENT DEPOSITION AND COMPACTION (TO ENSURE THAT EQUIPMENT IS NOT BEING DRIVEN ACROSS THE AREA).

7. RECORD ALL INSPECTIONS AND MAINTENANCE ACTIVITIES IN WRITING WITHIN 24 HOURS. SUBMIT INSPECTION REPORTS IN A FORMAT THAT IS ACCEPTABLE TO THE PROJECT ENGINEER. INCLUDE THE FOLLOWING IN THE RECORDS OF EACH INSPECTION AND MAINTENANCE ACTIVITY:
- DATE AND TIME OF INSPECTIONS
- NAME OF PERSONS CONDUCTING INSPECTIONS
- FINDINGS OF INSPECTIONS, INCLUDING RECOMMENDATIONS FOR CORRECTIVE ACTIONS
- CORRECTIVE ACTIONS TAKEN, INCLUDING DATES, TIMES, AND PARTY COMPLETING MAINTENANCE ACTIVITIES
- DATE AND AMOUNT OF ALL RAINFALL EVENTS GREATER THAN 0.5 INCH IN 24 HOURS
- DOCUMENTS AND CHANGES MADE TO THE SWPPP

8. REPLACE, REPAIR OR SUPPLEMENT ALL NONFUNCTIONAL BMPS BY THE END OF THE NEXT BUSINESS DAY FOLLOWING DISCOVERY UNLESS LISTED DIFFERENTLY BELOW:

A. REPAIR, REPLACE, OR SUPPLEMENT PERIMETER CONTROL DEVICES WHEN IT BECOMES NONFUNCTIONAL OR SEDIMENT REACHES 1/2 THE HEIGHT OF THE DEVICE. COMPLETE REPAIRS BY THE END OF THE NEXT BUSINESS DAY FOLLOWING DISCOVERY.
B. REPAIR OR REPLACE INLET PROTECTION DEVICES WHEN THEY BECOME NONFUNCTIONAL OR SEDIMENT REACHES 1/2 THE HEIGHT AND/OR DEPTH OF THE DEVICE.
C. DRAIN AND REMOVE SEDIMENT FROM TEMPORARY AND PERMANENT SEDIMENT BASINS ONCE THE SEDIMENT HAS REACHED 1/2 THE STORAGE VOLUME. COMPLETE WORK WITHIN 72 HOURS OF DISCOVERY.
D. REMOVE ALL DELTAS AND SEDIMENT DEPOSITED IN SURFACE WATERS INCLUDING DRAINAGE WAYS, CATCH BASINS, AND OTHER DRAINAGE SYSTEMS. RESTABILIZE ANY AREAS THAT ARE DISTURBED BY SEDIMENT REMOVAL OPERATIONS. SEDIMENT REMOVAL AND STABILIZATION MUST BE COMPLETED WITHIN 7 DAYS OF DISCOVERY. PREPARE AND SUBMIT A SITE MANAGEMENT PLAN FOR WORKING IN SURFACE WATERS. CONTACT ALL APPROPRIATE AUTHORITIES PRIOR TO WORKING IN SURFACE WATERS.
E. REMOVE TRACKED SEDIMENT FROM PAVED SURFACES BOTH ON AND OFF SITE WITHIN 24 HOURS OF DISCOVERY. STREET SWEEPING MAY HAVE TO OCCUR MORE OFTEN TO MINIMIZE OFF SITE IMPACTS. LIGHTLY WET THE PAVEMENT PRIOR TO SWEEPING.
F. MAINTAIN ALL BMPS UNTIL WORK HAS BEEN COMPLETED, SITE HAS GONE UNDER FINAL STABILIZATION, AND THE NOTICE OF TERMINATION (NOT) HAS BEEN SUBMITTED TO THE MPCA.

POLLUTION PREVENTION MANAGEMENT MEASURES (12.1)

ALL WORK NECESSARY TO PROVIDE PROPER POLLUTION PREVENTION MEASURES SHALL BE CONSIDERED INCIDENTAL TO THE PROJECT.

1. COLLECTED SEDIMENT, ASPHALT AND CONCRETE MILLINGS, FLOATING DEBRIS, AND OTHER WASTE MUST BE DISPOSED OF PROPERLY AND MUST COMPLY WITH MPCA DISPOSAL REQUIREMENTS.

2. OIL, GASOLINE, PAINT AND ANY HAZARDOUS SUBSTANCES MUST BE PROPERLY STORED, INCLUDING SECONDARY CONTAINMENT TO PREVENT SPILLS, LEAKS OR OTHER DISCHARGES. RESTRICTED ACCESS TO STORAGE AREAS MUST BE PROVIDED TO PREVENT VANDALISM. STORAGE AND DISPOSAL OF HAZARDOUS WASTE MUST BE IN COMPLIANCE WITH MPCA REGULATIONS.

3. EXTERNAL WASHING OF TRUCKS AND OTHER CONSTRUCTION VEHICLES IS NOT ALLOWED ON SITE. RUNOFF MUST BE CONTAINED AND WASTE PROPERLY DISPOSED OF. NO ENGINE DEGREASING IS ALLOWED ON SITE.

4. ALL LIQUID AND SOLID WASTE GENERATED BY CONCRETE WASHOUT OPERATIONS MUST BE CONTAINED IN A LEAK-PROOF CONTAINMENT FACILITY OR IMPERMEABLE LINER. A COMPACTED CLAY LINER THAT DOES NOT ALLOW WASHOUT LIQUIDS TO ENTER THE GROUND WATER IS CONSIDERED AN IMPERMEABLE LINER. THE LIQUID AND SOLID WASTES MUST NOT CONTACT THE GROUND, AND THERE MUST NOT BE RUNOFF FROM THE CONCRETE WASHOUT OPERATIONS OR AREAS. LIQUID AND SOLID WASTE MUST BE DISPOSED OF PROPERLY AND IN COMPLIANCE WITH MPCA REGULATIONS. A SIGN MUST BE INSTALLED ADJACENT TO EACH WASHOUT FACILITY TO INFORM CONCRETE EQUIPMENT OPERATORS TO UTILIZE THE PROPER FACILITIES.

5. ANY SPILLS OF HAZARDOUS MATERIALS AND/OR A MINIMUM OF 5-GALLONS PETROLEUM SHALL BE IMMEDIATELY REPORTED TO THE MPCA (STATE DUTY OFFICER: 1.800.422.0798 OR 651.297.8610). ANY SPILLS ABOVE THE REPORTABLE QUANTITIES LIMITS IN THE CODE OF FEDERAL REGULATIONS (CFR) TITLE 40, PART 302 SHALL BE REPORTED TO THE EPA NATIONAL RESPONSE CENTER (1.800.424.8802). IN ORDER TO REDUCE THE RISK OF HAZARDOUS MATERIALS COMING INTO CONTACT WITH STORM WATER, THE FOLLOWING PRACTICES WILL BE FOLLOWED: A) AN EFFORT WILL BE MADE TO STORE ONLY ENOUGH PRODUCTS REQUIRED TO DO THE WORK, B) ALL MATERIALS STORED ON SITE WILL BE STORED IN A NEAT, ORDERLY MANNER IN THEIR APPROPRIATE CONTAINERS AND IF POSSIBLE, UNDER COVER, C) PRODUCTS WILL BE KEPT IN THEIR ORIGINAL CONTAINERS WITH THE ORIGINAL MANUFACTURER'S LABEL UNLESS THE ORIGINAL CONTAINER CANNOT BE RESEALED, IN WHICH CASE THE ORIGINAL LABEL AND MATERIALS SAFETY DATA SHALL BE RETAINED, D) SUBSTANCES WILL NOT BE MIXED WITH ONE ANOTHER UNLESS RECOMMENDED BY THE MANUFACTURER, E) WHENEVER POSSIBLE, ALL OF A PRODUCT WILL BE USED BEFORE DISPOSING OF THE CONTAINER, F) THE MANUFACTURER'S RECOMMENDATIONS FOR PROPER USE AND DISPOSAL WILL BE FOLLOWED, AND G) THE OPERATOR WILL INSPECT DAILY TO ENSURE PROPER USE AND DISPOSAL OF MATERIALS ON SITE. MANUFACTURER'S RECOMMENDED METHODS FOR SPILL CLEANUP WILL BE CLEARLY POSTED AND SITE PERSONNEL WILL BE MADE AWARE OF THE PROCEDURES AND THE LOCATION OF THE INFORMATION AND CLEANUP SUPPLIES.

6. ALL SANITARY WASTE WILL BE COLLECTED BY TEMPORARY SANITARY FACILITIES PROVIDED AT THE SITE BY THE CONTRACTOR THROUGHOUT THE CONSTRUCTION PROJECT. ALL CONSTRUCTION PERSONNEL SHALL UTILIZE TEMPORARY SANITARY FACILITIES, WHICH SHALL BE REGULARLY SERVICE BY A COMMERCIAL OPERATOR. TEMPORARY SANITARY FACILITIES SHALL BE PLACED IN A LOCATION WHERE ACCIDENTAL SPILLAGE OF THE FACILITY SHALL NOT DISCHARGE TO THE STORM SEWER SYSTEM.

FINAL STABILIZATION (4.1)

1. ALL DISTURBED AREAS SHALL BE PERMANENTLY STABILIZED AS SHOWN ON THE CONSTRUCTION PLANS. METHODS TO ACHIEVE FINAL STABILIZATION INCLUDE: SEED WITH MULCH OR EROSION CONTROL BLANKET AND SOD.

2. ALL AREAS SEEDED BY MEANS OF BROADCAST SEEDING SHALL BE HAND RAKED TO INCORPORATE THE SEEDS INTO THE TOPSOIL.

3. EROSION CONTROL BLANKETS SHALL BE PLACED IN THE DITCH BOTTOM WITHIN 24 HOURS AFTER FINE GRADING. BIOROLLS SHALL BE PLACED IN CONJUNCTION WITH THE BLANKET IN THE DITCH BOTTOMS. THE BIOROLLS ARE INTENDED TO SERVE AS PERMANENT DITCH CHECKS.

4. THE PERMITTEE WILL SUBMIT A NOTICE OF TERMINATION (NOT) WITHIN 30 DAYS AFTER FINAL STABILIZATION. FINAL STABILIZATION SHALL CONSIST OF A UNIFORM PERENNIAL VEGETATIVE COVER OF AT LEAST 70 PERCENT OF THE EXPECTED FINAL VEGETATIVE GROWTH DENSITY OR OTHER PERMANENT COVER HAS BEEN ESTABLISHED OVER THE ENTIRE PERVIOUS SURFACES.

5. PERMIT COVERAGE TERMINATES ON INDIVIDUAL LOTS IF THE STRUCTURES ARE FINISHED AND TEMPORARY EROSION PREVENTION AND DOWNGRADIENT PERIMETER CONTROL IS COMPLETE, THE RESIDENCE SELLS TO THE HOMEOWNER, AND THE PERMITTEE DISTRIBUTES THE MPCA'S "HOMEOWNER FACT SHEET" TO THE HOMEOWNER.

RECORDS RETENTION (5.1&6.1)

1. RECORDS TO BE KEPT ON SITE DURING CONSTRUCTION INCLUDE:
   A. COPY OF THE SWPPP AND AMENDMENTS
   B. TRAINING DOCUMENTATION
   C. INPSECTION AND MAINTENANCE RECORDS

2. THIS SWPPP WILL BE AMENDED AS NEEDED AND/OR AS REQUIRED BY PROVISIONS OF THE PERMIT. ANY CHANGES TO TEH SWPPP SHALL BE NOTED BELOW AND ON THE APPLICABLE PLAN SHEETS.

3. THE CONTRACTOR WILL RECORD CHANGES TO THE SWPPP AND MAINTAIN DOCUMENTATION OF THESE CHANGES ON SITE AT ALL TIMES. A SUMMARY MAINTENANCE/CONSTRUCTION OBSERVATION REPORT WILL BE RECORDED AFTER EACH SITE INSPECTION/OBSERVATION.

4. THE CONTRACTOR WILL BE RESPONSIBLE TO MAINTAIN AND REPAIR THE EROSION AND SEDIMENT CONTROL BMP'S UNTIL FINAL STABILIZATION IS COMPLETE AND A NOTICE OF TERMINATION (NOT) IS SUBMITTED.

PIONEERengineering
CIVIL ENGINEERS LAND PLANNERS LAND SURVEYORS LANDSCAPE ARCHITECTS
2422 Enterprise Drive
Mendota Heights, MN 55120
(651) 681-1914
Fax: 681-9488
www.pioneereng.com

I hereby certify that this plan was prepared by me or under my direct supervision and that I am a duly Licensed Professional Engineer under the laws of the State of Minnesota
Name: Brian N. Molinaro
Reg. No. 47504 Date 05-03-2022

Revisions

Date	05-03-2022
Designed	NAP
Drawn	BN
Checked	BNM

01-ENG-120158-SHEET-SWPPP

STORMWATER POLLUTION PREVENTION PLAN

JOHNSON - REILAND
616 HIGHWAY 3
DUNDAS, MINNESOTA 55019

ENSCONCED WOODS
CHASKA, MINNESOTA

2.10 OF 36

© 2022 Pioneer Engineering, P.A.

ITEM DESCPRIPTION	UNIT	ESTIMATED QUANTITY
CONSTRUCTION LIMIT STAKING	LF	5200
ROCK CONSTRUCTION ENTRANCE	EA	1
ROCK CONSTRUCTION ENTRANCE MAINTENANCE	EA	1
EROSION CONTROL FENCE	LF	11570
MAINTENANCE OF PERIMETER EROSION CONTROL	YR	1
BIOROLL DITCH CHECK	EA	32
STREET SWEEPING AND VACUUMING	YR	1
STORM DRAIN INLET PROTECTION	EA	17
TEMPORARY SEED AND MULCH	AC	12.2
PERMANENT SEED AND MULCH	AC	7.8
MAINTAIN SEED AND MULCH	AC	12.2
EROSION CONTROL BLANKET (MNDOT CAT. 20)	SY	9180

ITEM DESCPRIPTION	UNIT	ESTIMATED QUANTITY
VEHICLE AND EQUIPMENT CLEANING	LS	1
VEHICLE AND EQUIPMENT FUELING	LS	1
VEHICLE AND EQUIPMENT MAINTENANCE	LS	1
SPILL PREVENTION AND CONTROL	LS	1
ROCK BERM EROSION CONTROL	LS	1
RIP RAP ENERGY DISSIPATER	CY	36
INDIVIDUAL LOT HOME CONSTRUCTION EROSION CONTROL	EA	29

AMENDMENT	BY	DATE

NOTE: SEE SHEETS 11.30–11.33 FOR OUTLET CONTROL STRUCTURE DETAILS

PIONEER engineering
CIVIL ENGINEERS LAND PLANNERS LAND SURVEYORS LANDSCAPE ARCHITECTS
2422 Enterprise Drive
Mendota Heights, MN 55120
(651) 681-1914
Fax: 681-9488
www.pioneereng.com

I hereby certify that this plan was prepared by me or under my direct supervision and that I am a duly Licensed Professional Engineer under the laws of the State of Minnesota
Name Brian N. Molinaro
Reg. No. 47504 Date 05-03-2022

Revisions

Date 05-03-2022
Designed NAP
Drawn BKZ

STORMWATER POLLUTION PREVENTION PLAN

JOHNSON - REILAND
616 HIGHWAY 3
DUNDAS, MINNESOTA 55019

ENSCONCED WOODS
CHASKA, MINNESOTA

01-ENG-120158-SHEET-SWPPP

6.B. Recommend Approval of the Final
Page 18 of 59
Packet Page 99 of 570
© 2022 Pioneer Engineering, P.A.

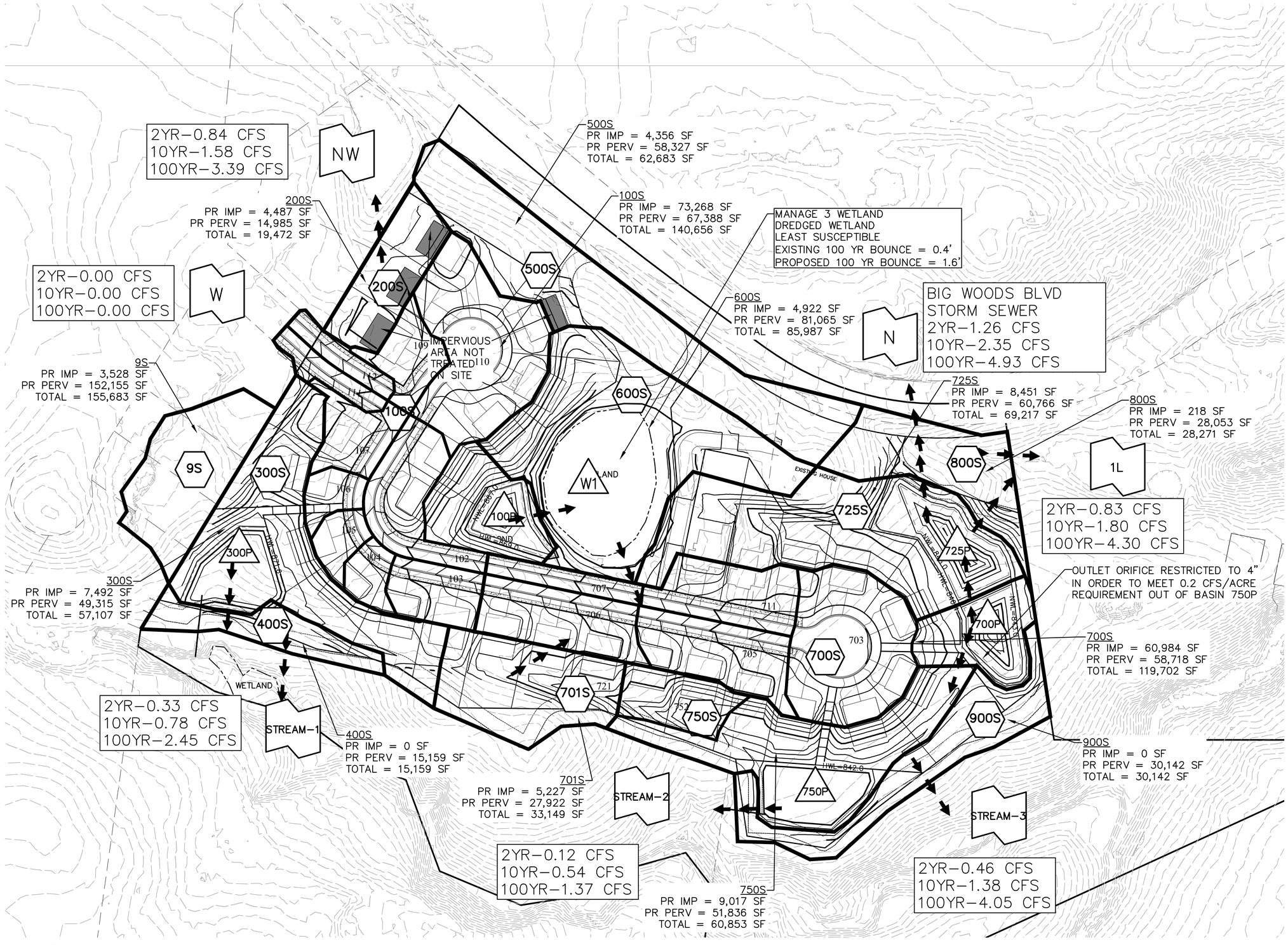

ALLOWED DISCHARGE TO CB ON BIG WOODS BLVD
100YR = 5 CFS
10 YR = 3.5 CFS
PROPOSED DISCHARGE 100YR = 4.93 CFS
PROPOSED DISCHARGE 10 YR = 2.35 CFS

LIMIT OF 0.2 CFS/ACRE
SUBCATCHMENT 200S, 400S, 800S, 900S LEFT IN EXISTING CONDITION AND THEREFORE EXCLUDED

REMAINING SUBCATCHMENT AREA 13.776 AC
ALLOWABLE DISCHARGE = 2.75 CFS

300P = 1.38 CFS
750P = 1.37 CFS
725P = 0.00 CFS
TOTAL = 2.75 CFS

EXISTING VOLUME TO STREAM = 10.086 AF
PROPOSED VOLUME TO STREAM = 3.348 AF

LEGEND

200A	SUBCATCHMENT
200P	POND
OFFSITE	LINK

0 35 70 140
GRAPHIC SCALE IN FEET

PIONEER engineering
CIVIL ENGINEERS LAND PLANNERS LAND SURVEYORS LANDSCAPE ARCHITECTS
2422 Enterprise Drive
Mendota Heights, MN 55120
(651) 681-1914
Fax: 681-9488
www.pioneereng.com

I hereby certify that this plan was prepared by me or under my direct supervision and that I am a duly Licensed Professional Engineer under the laws of the State of Minnesota
Name Brian N. Molinaro
Reg. No. 47504 Date 05-03-2022

Revisions

Date 05-03-2022
Designed NAP
Drawn RZ

PROPOSED HYDROLOGY MAP

JOHNSON - REILAND
616 HIGHWAY 3
DUNDAS, MINNESOTA 55019

ENSCONCED WOODS
CHASKA, MINNESOTA

01-ENG-120158-SHEET-HYDR-PROP

2.12 OF 36

© 2022 Pioneer Engineering, P.A.

MPCA's Construction Stormwater Special Waters Search

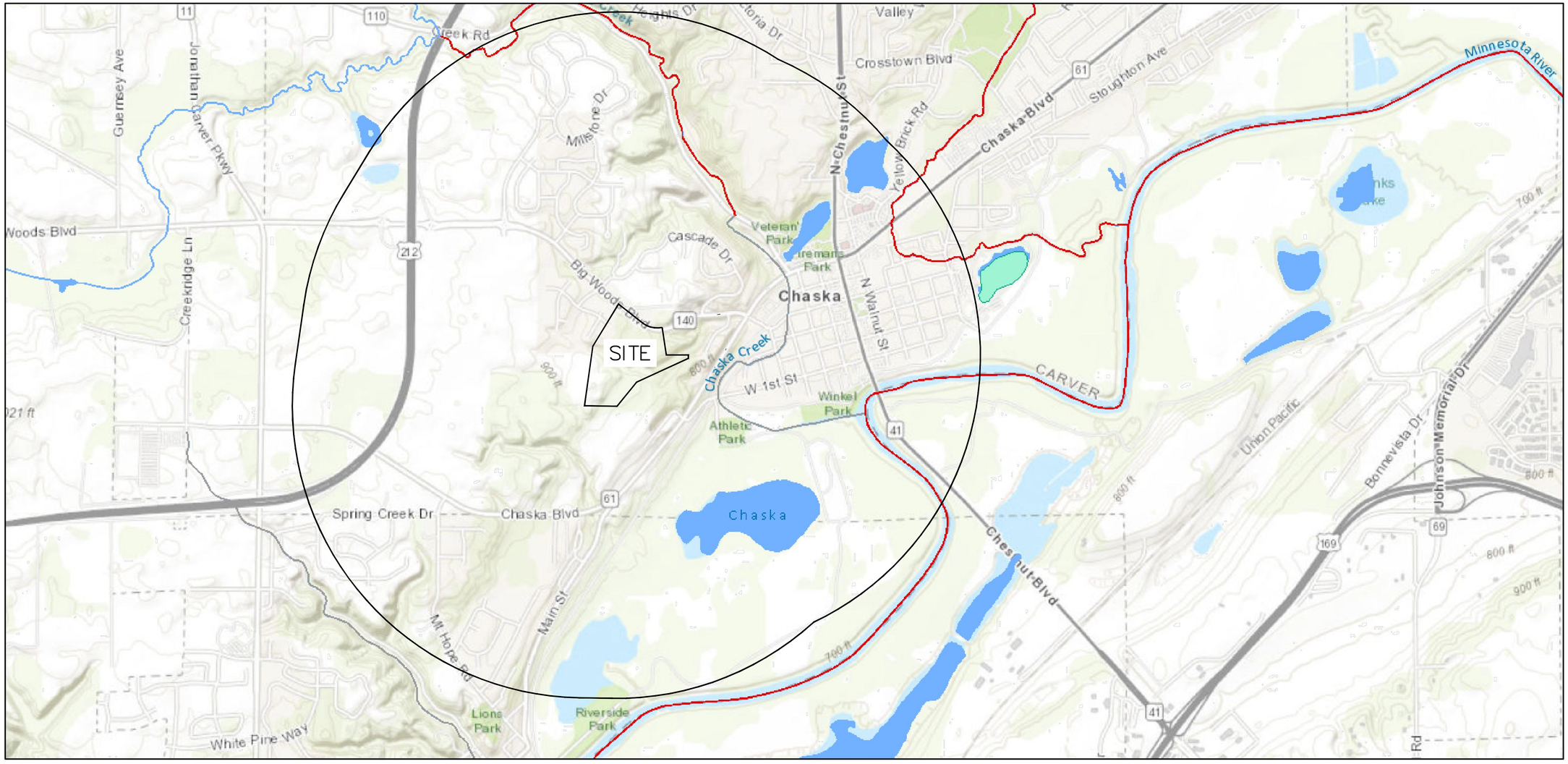

8/16/2021, 2:51:59 PM

- Waterbody Units - Lakes (1)
- Waterbody Units - Streams (1)
- Impaired Lakes without additional construction requirements
- Impaired Lakes with additional construction requirements
- Impaired Wetlands without additional construction requirements
- Impaired Wetlands with additional construction requirements
- Impaired Streams without additional construction requirements
- Impaired Streams with additional construction requirements
- Lake Superior ORVW - Prohibited Discharge
- Lake Superior ORVW - Restricted Discharge
- Trout Lake and Lake Trout Lake
- Lake Trout Lake
- Trout Lake
- Scientific and Natural Area
- Trout Stream Tributary
- Trout Stream
- Scenic and Recreational River Segments
- Mississippi River
- Wilderness Area
- DNR Listed Calcareous Fen
- MPCA Listed Calcareous Fen

1:30,000

0 0.25 0.5 1 mi

0 0.4 0.8 1.6 km

County of Scott, Three Rivers Park District, Esri Canada, Esri, HERE, Garmin, INCREMENT P, USGS, METI/NASA, EPA, USDA

Minnesota Pollution Control Agency

County of Scott, Three Rivers Park District, Esri Canada, Esri, HERE, Garmin, INCREMENT P, USGS, METI/NASA, NGA, EPA, USDA | Minnesota Pollution Control Agency |

PIONEERengineering
CIVIL ENGINEERS LAND PLANNERS LAND SURVEYORS LANDSCAPE ARCHITECTS
2422 Enterprise Drive
Mendota Heights, MN 55120
(651) 681-1914
Fax: 681-9488
www.pioneereng.com

I hereby certify that this plan was prepared by me or under my direct supervision and that I am a duly Licensed Professional Engineer under the laws of the State of Minnesota

Name Brian N. Molinaro

Reg. No. 47504 Date 05-03-2022

Revisions

Date 05-03-2022
Designed NAP
Drawn BZ

SPECIAL/IMPAIRED WATERS MAP

JOHNSON - REILAND
616 HIGHWAY 3
DUNDAS, MINNESOTA 55019

ENSCONCED WOODS
CHASKA, MINNESOTA

01-ENG-120158-SHEET-MPCA

2.13 OF 36

© 2022 Pioneer Engineering, P.A.

NOTE: SEE SHEETS T1–T6 FOR TREE REMOVAL

BIG WOODS BLVD.

FOUNDERS PATH

FOUNDERS RIDGE

CONSTRUCTION TRAFFIC SHALL NOT ACCESS THE SITE FROM FOUNDERS PATH. PROVIDE NO CONSTRUCTION ACCESS SIGN

SAWCUT 33 LF OF BITUMINOUS PAVEMENT & CURB AND GUTTER

SAWCUT 5 LF OF SIDEWALK

REMOVE AND DISPOSE OF 23.6 SY EXISTING SIDEWALK

SALVAGE EXISTING HYDRANT

REMOVE AND DISPOSE OF 114.65 SY EXISTING ROAD SECTION

REMOVE AND DISPOSE OF 19.5 SY EXISTING SIDEWALK

REMOVE AND DISPOSE OF 34 SY EXISTING DRIVEWAY AS REQUIRED

SAWCUT 16 LF OF DRIVEWAY

CONTRACTOR TO CAP AND SEAL EXISTING WELLS

REMOVE AND DISPOSE OF SIGNS

REMOVE AND DISPOSE OF EXISTING WATER SERVICE

REMOVE AND DISPOSE OF EXISTING 52' – 24" RCP CULVERT & RE-GRADE DITCH

DISPOSE OF EXISTING FIBER

NOTE:
CONTRACTOR TO USE EXISTING DRIVEWAY LOCATION FOR CONSTRUCTION ACCESS PER AGREEMENT WITH CARVER COUNTY, CONSTRUCT TEMPORARY CONSTRUCTION ACCESS

REMOVE AND DISPOSE OF EXISTING GAS SERVICE

REMOVE AND DISPOSE OF EXISTING POWER POLE & OVERHEAD POWER LINE

REMOVE AND DISPOSE OF EXISTING 26' – 12" CMP CULVERT

REMOVE AND DISPOSE OF EXISTING SEPTIC SYSTEM

DEMO & DISPOSE OF EXISTING HOUSE & OUTBUILDINGS

REMOVE AND DISPOSE OF EXISTING WIRE FENCE

REMOVE AND DISPOSE OF EXISTING 11' – 12" CMP CULVERT

SAWCUT 57 LF OF BITUMINOUS PAVEMENT.

CAP AND ABANDON EXISTING SANITARY SERVICE.

REMOVE AND DISPOSE OF EXISTING DRIVEWAY ACCESS TO BIG WOODS BLVD.

REMOVE AND REPLACE 100 LF OF CURB AND GUTTER. RESTORE TO EXISTING ROAD SECTION.

REMOVE AND REPLACE 159 SY OF EXISTING ROAD AS. RESTORE TO EXISTING ROAD SECTION.

SEC. 8, TWP. 115, RGE. 23

1/4 OF NW

THE

0 25 50 100

GRAPHIC SCALE IN FEET

PIONEER engineering

CIVIL ENGINEERS LAND PLANNERS LAND SURVEYORS LANDSCAPE ARCHITECTS

2422 Enterprise Drive
Mendota Heights, MN 55120
(651) 681-1914
Fax: 681-9488
www.pioneereng.com

I hereby certify that this plan was prepared by me or under my direct supervision and that I am a duly Licensed Professional Engineer under the laws of the State of Minnesota

Name Brian N. Molinaro
Reg. No. 47504 Date 05-03-2022

Revisions

Date 05-03-2022
Designed NAP
Drawn RK
Checked

REMOVAL PLAN & CONSTRUCTION ACCESS

JOHNSON - REILAND
616 HIGHWAY 3
DUNDAS, MINNESOTA 55019

ENSCONCED WOODS
CHASKA, MINNESOTA

01-ENG-120158-SHEET-DEMO

3.10 OF 36

© 2022 Pioneer Engineering, P.A.

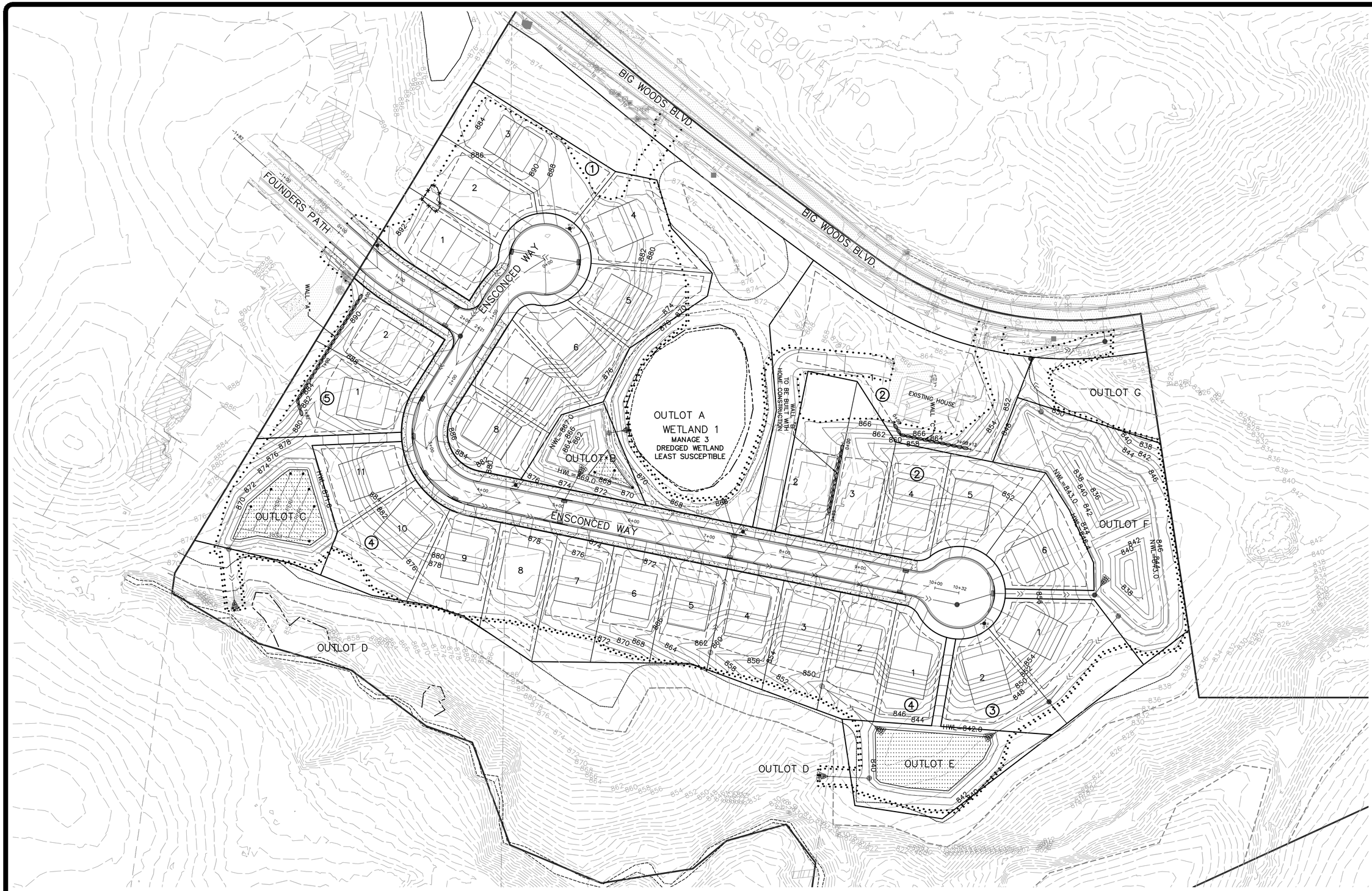

STORMWATER SETBACKS
LOW OPENING ADJACENT GROUND
2' + HWL
1' + EOF

PIONEER engineering
CIVIL ENGINEERS LAND PLANNERS LAND SURVEYORS LANDSCAPE ARCHITECTS

2422 Enterprise Drive
Mendota Heights, MN 55120
(651) 681-1914
Fax: 681-9488
www.pioneereng.com

I hereby certify that this plan was prepared by me or under my direct supervision and that I am a duly Licensed Professional Engineer under the laws of the State of Minnesota

Name Brian N. Molinaro
Reg. No. 47504 Date 05-03-2022

Revisions

Date 05-03-2022
Designed NAP
Drawn BZ
Checked BNM

OVERALL GRADING PLAN

JOHNSON - REILAND
616 HIGHWAY 3
DUNDAS, MINNESOTA 55019

ENSCONCED WOODS
CHASKA, MINNESOTA

01-ENG-120158-SHEET-GRAD-OVERALL

4.00 OF 36

© 2022 Pioneer Engineering, P.A.

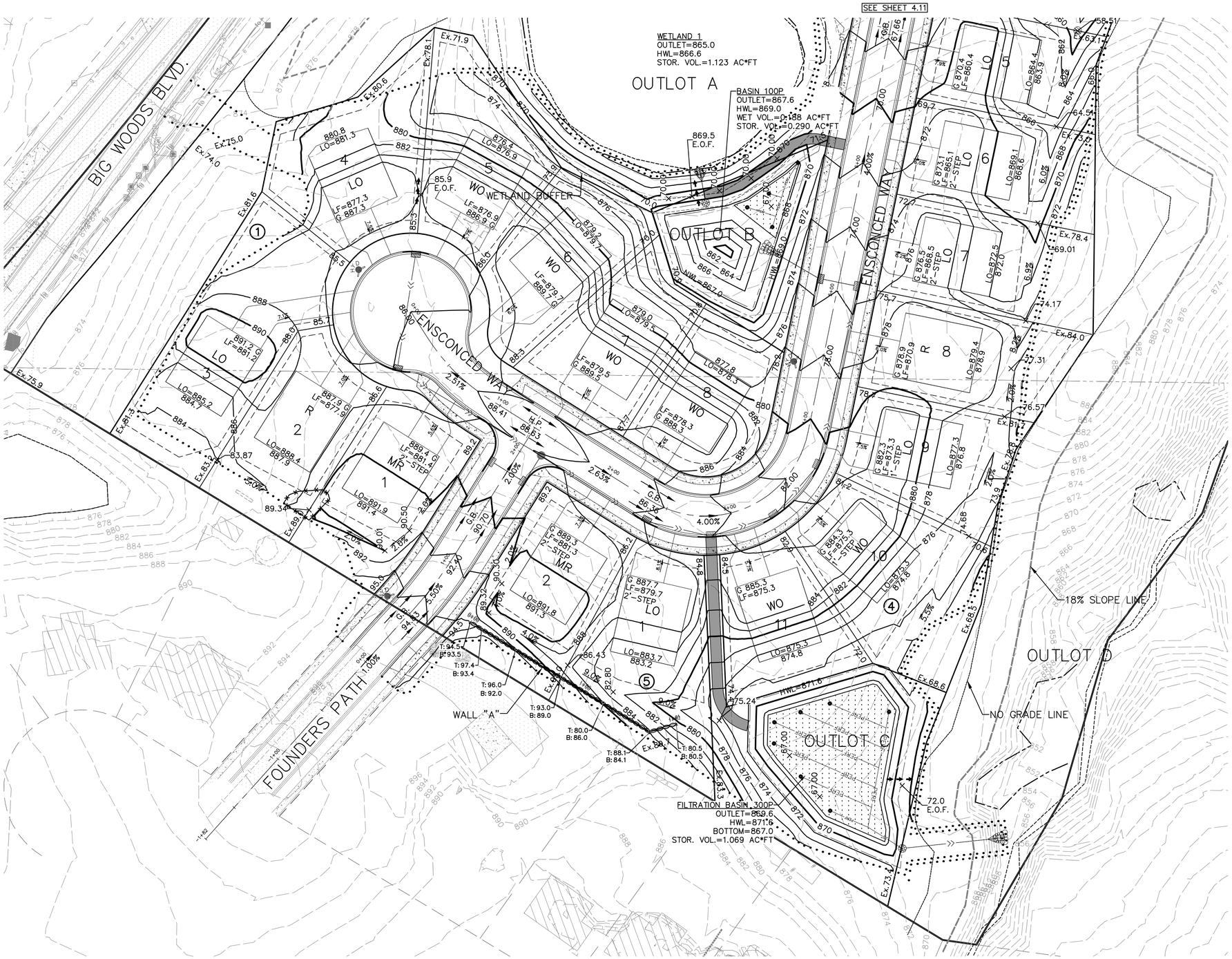

STORMWATER SETBACKS
LOW OPENING ADJACENT GROUND
2' + HWL
1' + EOF

LEGEND

- PERIMETER EROSION CONTROL FENCE. INSTALL BEFORE START OF GRADING
- TREE FENCE INSTALL BEFORE START OF GRADING
- BASIN ACCESS 8% SLOPE MAX. TO BE CONSTRUCTED WITH SUITABLE SOIL CAPABLE OF SUPPORTING VEHICLE TRAFFIC
- INFILTRATION/FILTRATION AREA TO BE PROTECTED DURING CONSTRUCTION.

0 20 40 80
GRAPHIC SCALE IN FEET

PIONEER engineering
CIVIL ENGINEERS LAND PLANNERS LAND SURVEYORS LANDSCAPE ARCHITECTS
2422 Enterprise Drive
Mendota Heights, MN 55120
(651) 681-1914
Fax: 681-9488
www.pioneereng.com

I hereby certify that this plan was prepared by me or under my direct supervision and that I am a duly Licensed Professional Engineer under the laws of the State of Minnesota
Name Brian N. Molinaro
Reg. No. 47504 Date 05-03-2022

Revisions

Date 05-03-2022
Designed NAP
Drawn Packet Page 104 of

GRADING PLAN

JOHNSON - REILAND
616 HIGHWAY 3
DUNDAS, MINNESOTA 55019

ENSCONCED WOODS
CHASKA, MINNESOTA

4.10 OF 36

01-ENG-120158-SHEET-GRAD

© 2022 Pioneer Engineering, P.A.



STORMWATER SETBACKS
LOW OPENING ADJACENT GROUND
2' + HWL
1' + EOF

LEGEND

- PERIMETER EROSION CONTROL FENCE. INSTALL BEFORE START OF GRADING
- TREE FENCE INSTALL BEFORE START OF GRADING
- BASIN ACCESS 8% SLOPE MAX. TO BE CONSTRUCTED WITH SUITABLE SOIL CAPABLE OF SUPPORTING VEHICLE TRAFFIC
- INFILTRATION/FILTRATION AREA TO BE PROTECTED DURING CONSTRUCTION.

0 20 40 80
GRAPHIC SCALE IN FEET

01-ENG-120158-SHEET-GRAD

PIONEER engineering
CIVIL ENGINEERS LAND PLANNERS LAND SURVEYORS LANDSCAPE ARCHITECTS
2422 Enterprise Drive
Mendota Heights, MN 55120
(651) 681-1914
Fax: 681-9488
www.pioneereng.com

I hereby certify that this plan was prepared by me or under my direct supervision and that I am a duly Licensed Professional Engineer under the laws of the State of Minnesota
Name Brian N. Molinaro
Reg. No. 47504 Date 05-03-2022

Revisions

Date 05-03-2022
Designed NAP
Drawn RC
Checked BNM

GRADING PLAN

JOHNSON - REILAND
616 HIGHWAY 3
DUNDAS, MINNESOTA 55019

ENSCONCED WOODS
CHASKA, MINNESOTA

4.11 OF 36

© 2022 Pioneer Engineering, P.A.

SEE SHEET 5.11

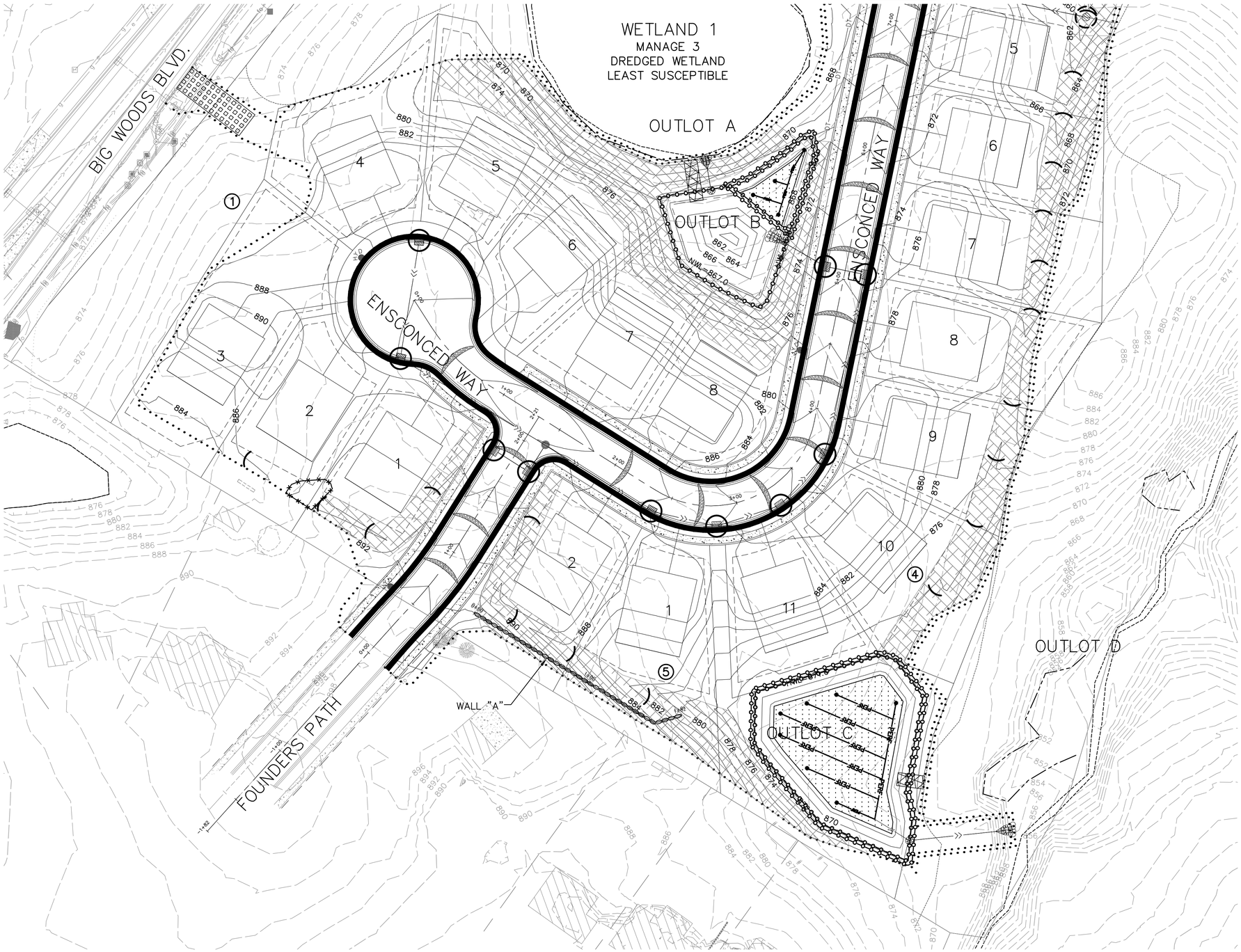

LEGEND

- ROCK CONSTRUCTION ENTRANCE INSTALL BEFORE START OF GRADING
- PERIMETER EROSION CONTROL FENCE. INSTALL BEFORE START OF GRADING
- TREE FENCE INSTALL BEFORE START OF GRADING
- SECONDARY EROSION CONTROL FENCE. TO BE INSTALLED 48 HOURS AFTER COMPLETION OF GRADING.
- 2' SOD OR EROSION CONTROL FENCE AT BACK OF CURB. TO BE INSTALLED AFTER COMPLETION OF SIDEWALK CONSTRUCTION.
- SUMPED RIP RAP PERMANENT ENERGY DISSIPATER, INSTALL WITHIN 24 HOURS AFTER CONNECTION TO A SURFACE WATER.
- CATCH BASIN INLET PROTECTION TO BE INSTALLED AFTER 1ST LIFT OF BITUMINOUS.
- CATCH BASIN INLET PROTECTION TO BE INSTALLED WITH CATCH BASIN GRATE.
- STRAW BIO ROLLS. INSTALL WITHIN 7 DAYS OF GRADING COMPLETION OR BEFORE 1ST RAINFALL EVENT WHICHEVER IS FIRST
- ROCK BERM. INSTALL WITHIN 7 DAYS OF GRADING COMPLETION OR BEFORE 1ST RAINFALL EVENT WHICHEVER IS FIRST
- STABILIZED EMERGENCY OVERFLOW
- MNDOT CAT 20 EROSION CONTROL BLANKET. INSTALL WITHIN 7 DAYS OF GRADING COMPLETION
- INFILTRATION/FILTRATION AREA TO BE PROTECTED DURING CONSTRUCTION.

0 20 40 80

GRAPHIC SCALE IN FEET

PIONEER *engineering*

CIVIL ENGINEERS LAND PLANNERS LAND SURVEYORS LANDSCAPE ARCHITECTS

2422 Enterprise Drive
Mendota Heights, MN 55120
(651) 681-1914
Fax: 681-9488
www.pioneereng.com

I hereby certify that this plan was prepared by me or under my direct supervision and that I am a duly Licensed Professional Engineer under the laws of the State of Minnesota

Name Brian N. Molinaro
Reg. No. 47504 Date 05-03-2022

Revisions

Date 05-03-2022
Designed NAP
Drawn RK
Checked BNM

EROSION CONTROL PLAN

JOHNSON - REILAND
616 HIGHWAY 3
DUNDAS, MINNESOTA 55019

ENSCONCED WOODS
CHASKA, MINNESOTA

5.10 OF 36

01-ENG-120158-SHEET-EROS

© 2022 Pioneer Engineering, P.A.

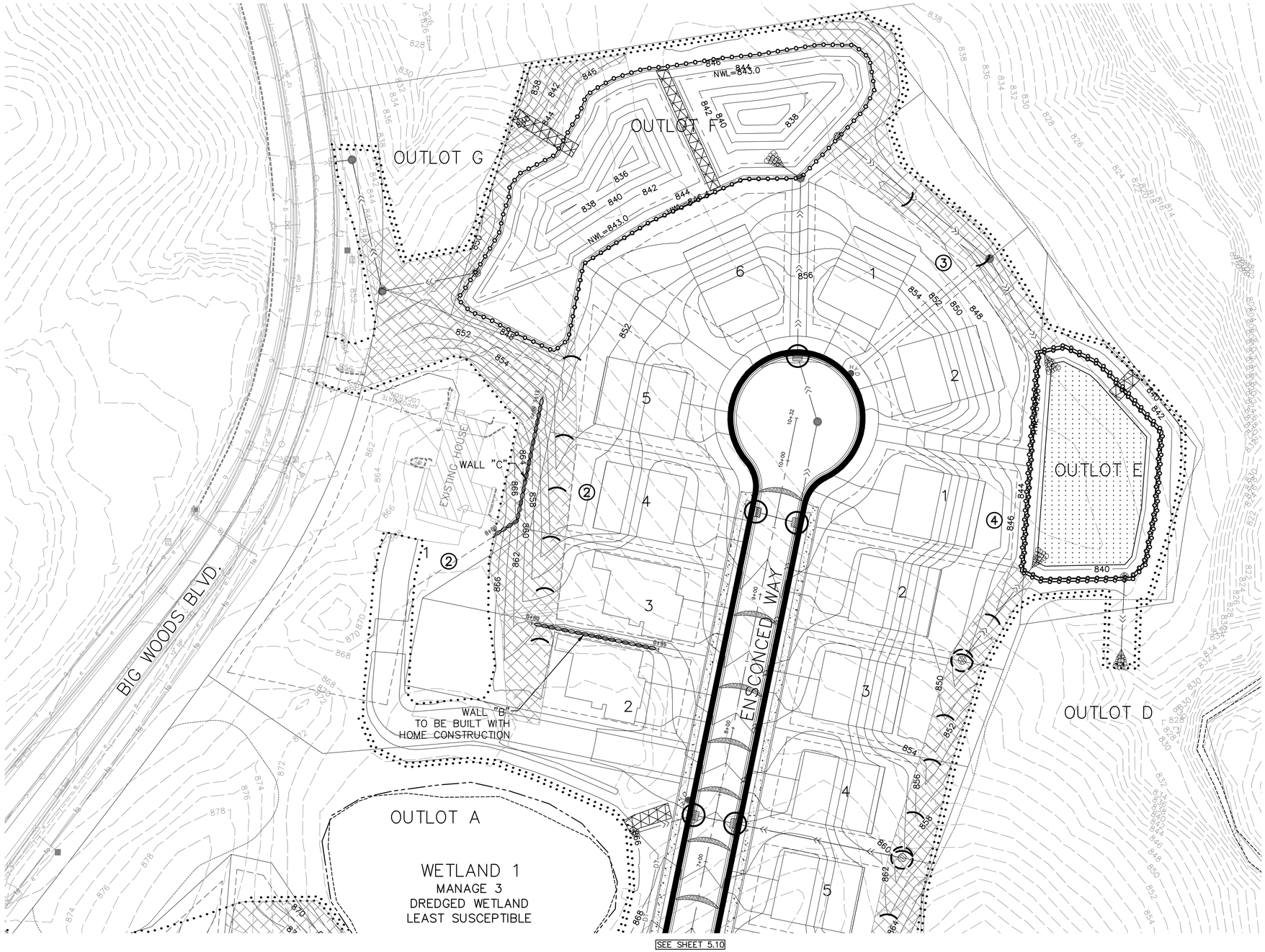

LEGEND

- ROCK CONSTRUCTION ENTRANCE INSTALL BEFORE START OF GRADING
- PERIMETER EROSION CONTROL FENCE. INSTALL BEFORE START OF GRADING
- TREE FENCE INSTALL BEFORE START OF GRADING
- SECONDARY EROSION CONTROL FENCE. TO BE INSTALLED 48 HOURS AFTER COMPLETION OF GRADING.
- 2' SOD OR EROSION CONTROL FENCE AT BACK OF CURB. TO BE INSTALLED AFTER COMPLETION OF SIDEWALK CONSTRUCTION.
- SUMPED RIP RAP PERMANENT ENERGY DISSIPATER, INSTALL WITHIN 24 HOURS AFTER CONNECTION TO A SURFACE WATER.
- CATCH BASIN INLET PROTECTION TO BE INSTALLED AFTER 1ST LIFT OF BITUMINOUS.
- CATCH BASIN INLET PROTECTION TO BE INSTALLED WITH CATCH BASIN GRATE.
- STRAW BIO ROLLS. INSTALL WITHIN 7 DAYS OF GRADING COMPLETION OR BEFORE 1ST RAINFALL EVENT WHICHEVER IS FIRST
- ROCK BERM. INSTALL WITHIN 7 DAYS OF GRADING COMPLETION OR BEFORE 1ST RAINFALL EVENT WHICHEVER IS FIRST
- STABILIZED EMERGENCY OVERFLOW
- MNDOT CAT 20 EROSION CONTROL BLANKET. INSTALL WITHIN 7 DAYS OF GRADING COMPLETION
- INFILTRATION/FILTRATION AREA TO BE PROTECTED DURING CONSTRUCTION.

0 20 40 80
GRAPHIC SCALE IN FEET

PIONEER engineering
CIVIL ENGINEERS LAND PLANNERS LAND SURVEYORS LANDSCAPE ARCHITECTS

2422 Enterprise Drive
Mendota Heights, MN 55120
(651) 681-1914
Fax: 681-9488
www.pioneereng.com

I hereby certify that this plan was prepared by me or under my direct supervision and that I am a duly Licensed Professional Engineer under the laws of the State of Minnesota

Name: Brian N. Molinaro
Reg. No. 47504 Date 05-03-2022

Revisions

Date 05-03-2022
Designed NAP
Drawn BZ

EROSION CONTROL PLAN

JOHNSON - REILAND
616 HIGHWAY 3
DUNDAS, MINNESOTA 55019

ENSCONCED WOODS
CHASKA, MINNESOTA

01-ENG-120158-SHEET-EROS

5.11 OF 36

© 2022 Pioneer Engineering, P.A.

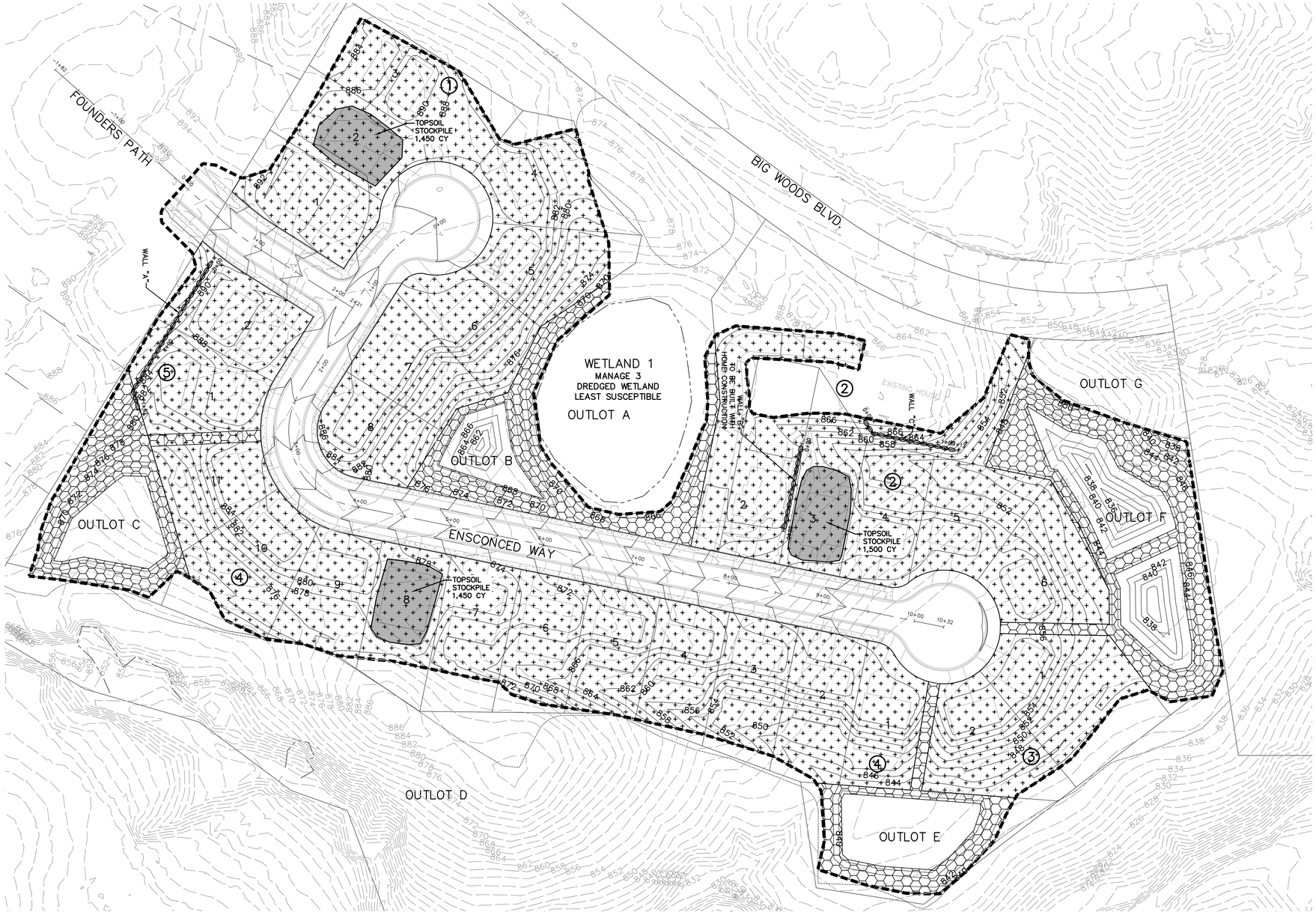

TOPSOIL MANAGEMENT NOTES

(TOPSOIL STRIPPING, STOCKPILING, SAMPLING, RE-APPLICATION METHODS):

1. CONTRACTOR SHALL STRIP ALL TOPSOIL AND STOCKPILE IN LOCATIONS SHOWN ON THE PLAN. CONTRACTOR SHALL SEPARATE TOPSOIL STRIPPED IN AREAS MEETING THE SPECIFICATION FROM REMAINING SITE. TOPSOIL MUST MEET THE PROJECT SPECIFIC/CCWMO TOPSOIL STANDARD.
2. ADDITIONAL TOPSOIL SHALL BE STOCKPILED ON-SITE IN DESIGNATED AREAS ON PLAN FOR USE BY BUILDERS AFTER INDIVIDUAL HOME CONSTRUCTION.
3. TOPSOIL STOCKPILES SHALL HAVE SILT FENCE INSTALLED AROUND PERIMETER TO ENSURE ITS ORIGINAL SOIL PROPERTIES ARE MAINTAINED.
4. 6 INCHES OF TOPSOIL (MINIMUM) MEETING PROJECT/CCWMO SPECIFICATION MUST BE RESTORED TO ALL PERVIOUS AREAS. (1"-3" IN LOT AREAS UNTIL HOMES ARE BUILT, TEMPORARY LOT AREA TOPSOIL DOES NOT NEED TO MEET SPEC)
5. SUBSOIL MUST BE DE-COMPACTED TO A DEPTH OF 6 INCHES PRIOR TO PLACEMENT OF 6" (MINIMUM) TOPSOIL. DE-COMPACTION METHOD SHALL BE TO SCARIFY/LOOSEN TOP 6" OF SOIL WITH GRADING CHISEL, PRIOR TO PLACEMENT OF 6" TOPSOIL.
6. STOCKPILE SAMPLING/TESTING SHALL BE DONE AS FOLLOWS:
   - 6.1 ONE COMPOSITE SAMPLE SHALL BE COLLECTED, TESTED AND SUBMITTED PER 2,500 CUBIC YARDS OF STOCKPILE.
   - 6.2 TESTING SHALL BE PER CCWMO TESTING REQUIREMENTS AND ONE COMPOSITE SAMPLE SHALL BE DONE PER 2,500 CUBIC YARDS OF STOCKPILE.

TOPSOIL STANDARD (TOPSOIL SPECIFICATIONS)

ONSITE SOIL TESTING PERFORMED BY BRAUN INTERTEC

TOPSOIL DATA:

----	TOTAL DISTURBED AREA	12.009 AC
	TOTAL ESTIMATED TOPSOIL AVAILABLE (TOTAL DISTURBED X 6" EXISTING TOPSOIL (VARIES FROM 6" TO 42" PER GEOTECH, ASSUME 6"))	9,690 CY
	MINIMUM VOLUME OF TOPSOIL REQUIRED FOR DEVELOPED SITE (TO RESTORE GREEN SPACES) (DISTURBED AREA MINUS IMPERVIOUS AREA AND PONDING AREA, ASSUMING 6" RESPREAD)	5,650 CY
	MINIMUM VOLUME OF TOPSOIL RE-SPREAD AT COMPLETION OF MASS GRADING (ASSIMING 6" RE-SPREAD OVER OUTLOTS - MUST MEET PROJECT SPECIFICATION) (ASSUMING 1-3" RE-SPREAD OVER REMAINING SITE (LOTS, EXCLUDING ROADWAY) - DOES NOT NEED TO MEET SPECIFICATION	1,260 CY OF 6" 3,020 CY OF 3" 4,280 CY TOTAL
	MINIMUM VOLUME OF TOPSOIL TO BE STOCKPILED AFTER MASS GRADING FOR REMAINING HOME CONSTRUCTION (LOTS) (ASSUMING 6" RE-SPREAD OVER LOTS - MUST MEET PROJECT SPECIFICATION)	4,400 CY

N

0 30 60 120

GRAPHIC SCALE IN FEET

PIONEER engineering
CIVIL ENGINEERS LAND PLANNERS LAND SURVEYORS LANDSCAPE ARCHITECTS
2422 Enterprise Drive
Mendota Heights, MN 55120
(651) 681-1914
Fax: 681-9488
www.pioneereng.com

I hereby certify that this plan was prepared by me or under my direct supervision and that I am a duly Licensed Professional Engineer under the laws of the State of Minnesota

Name: Brian N. Molinaro
Reg. No. 47504 Date 05-03-2022

Revisions

Date	05-03-2022
Designed	NAP
Drawn	RK

TOPSOIL PLAN

JOHNSON - REILAND
616 HIGHWAY 3
DUNDAS, MINNESOTA 55019

ENSCONCED WOODS
CHASKA, MINNESOTA

6.10 OF 36

01-ENG-120158-SHEET-TOPSOIL

© 2022 Pioneer Engineering, P.A.

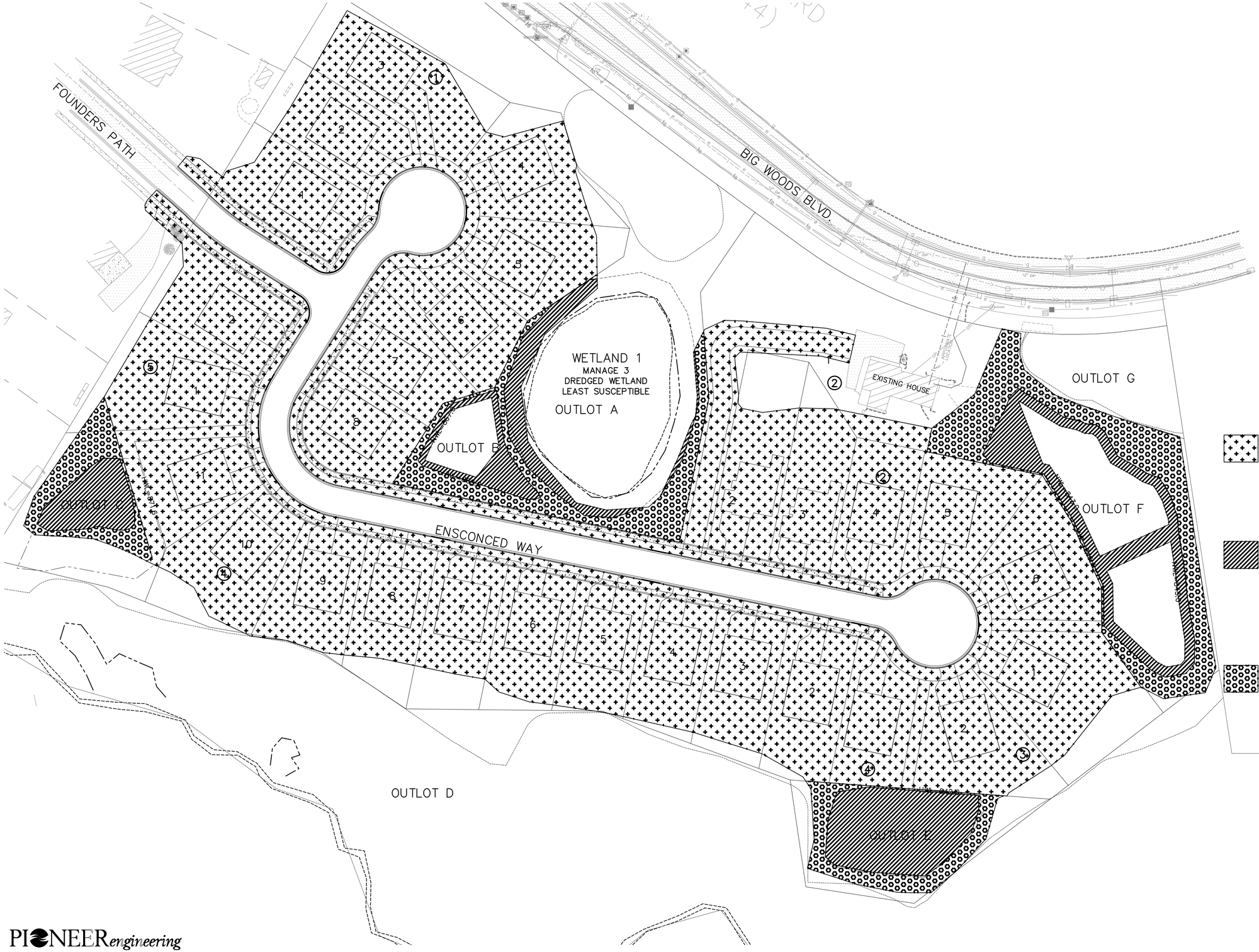

TEMPORARY SEED SHALL BE DONE IN ACCORDANCE WITH MNDOT 2575 & 3876 CONSISTING OF:

- MAY 1 – AUGUST 1: MINNESOTA STATE SEED MIXTURE **21–111 (OATS COVER CROP)** @ **100.0** POUNDS PER ACRE OR APPROVED EQUAL.
- AUGUST 1 – OCTOBER 1: MINNESOTA STATE SEED MIXTURE **21–112 (WINTER WHEAT COVER CROP)** @ **100.0** POUNDS PER ACRE OR APPROVED EQUAL.
- MULCH SHALL BE MNDOT 3882, TYPE 1 @ 2 TONS PER ACRE OR APPROVED EQUAL AND DISK ANCHORED IN PLACE OR APPROVED EQUAL, INSTALLED TO MINIMUM 90% COVERAGE OF THE SURFACE AREA DISTURBED.
- MNDOT 3881, TYPE 1 FERTILIZER, 10–10–20 @ 200 POUNDS PER ACRE.

PERMANENT TURF RESTORATION SHALL BE DONE IN ACCORDANCE WITH MNDOT 2575 & 3876 CONSISTING OF:

- MINNESOTA STATE SEED MIXTURE 25–121 (SANDY GENERAL ROADSIDE) AT 61.0 POUNDS PER ACRE.
- MULCH SHALL BE MNDOT 3882, TYPE 1 @ 2 TONS PER ACRE OR APPROVED EQUAL AND DISK ANCHORED IN PLACE OR APPROVED EQUAL, INSTALLED TO MINIMUM 90% COVERAGE OF THE SURFACE AREA DISTURBED.
- MNDOT 3881, TYPE 3 SLOW–RELEASE FERTILIZER, 22–5–10, MINIMUM 70% WATER–INSOLUBLE NITROGEN @ 350 POUNDS PER ACRE.

PERMANENT BASIN SEEDING SHALL BE DONE IN ACCORDANCE WITH MNDOT 2575 & 3876 CONSISTING OF:

- WET BASIN BENCH/(IN)FILTRATION BASIN: MINNESOTA STATE SEED MIXTURE **35–261 (STORMWATER SOUTH AND WEST)** AT **35.0** POUNDS PER ACRE.
- ABOVE BASIN BENCH TO HIGH WATER LEVEL: MINNESOTA STATE SEED MIXTURE **35–241 (MESIC PRAIRIE GENERAL)** AT **36.5** POUNDS PER ACRE.
- MULCH SHALL BE MNDOT 3882, TYPE 3 @ 2 TONS PER ACRE OR APPROVED EQUAL AND DISK ANCHORED IN PLACE OR APPROVED EQUAL.
- MNDOT 3881, TYPE 4 NATURAL–BASED FERTILIZER, 18–1–8 @ 120 POUNDS PER ACRE OR 17–10–7 @ 150 POUNDS PER ACRE

UPLAND AREA

- MINNESOTA STATE SEED MIXTURE 35–621 (DRY PRAIRIE SOUTHEAST) AT 11.0 POUNDS PER ACRE.
- MULCH SHALL BE MNDOT 3882, TYPE 3 @ 2 TONS PER ACRE OR APPROVED EQUAL AND DISK ANCHORED IN PLACE OR APPROVED EQUAL,
- MNDOT 3881, TYPE 4 NATURAL–BASED FERTILIZER, 18–1–8 OR 17–10–7 @ 100 LBS PER ACRE

N

0 25 50 100

GRAPHIC SCALE IN FEET

01-ENG-120158-SHEET-SEED

PIONEERengineering
CIVIL ENGINEERS LAND PLANNERS LAND SURVEYORS LANDSCAPE ARCHITECTS
2422 Enterprise Drive
Mendota Heights, MN 55120
(651) 681-1914
Fax: 681-9488
www.pioneereng.com

I hereby certify that this plan was prepared by me or under my direct supervision and that I am a duly Licensed Professional Engineer under the laws of the State of Minnesota

Name Brian N. Molinaro
Reg. No. 47504 Date 05-03-2022

Revisions

Date	05-03-2022
Designed	NAP
Drawn	BG

SEEDING PLAN

JOHNSON - REILAND
616 HIGHWAY 3
DUNDAS, MINNESOTA 55019

ENSCONCED WOODS
CHASKA, MINNESOTA

7.10 OF 36

© 2022 Pioneer Engineering, P.A.

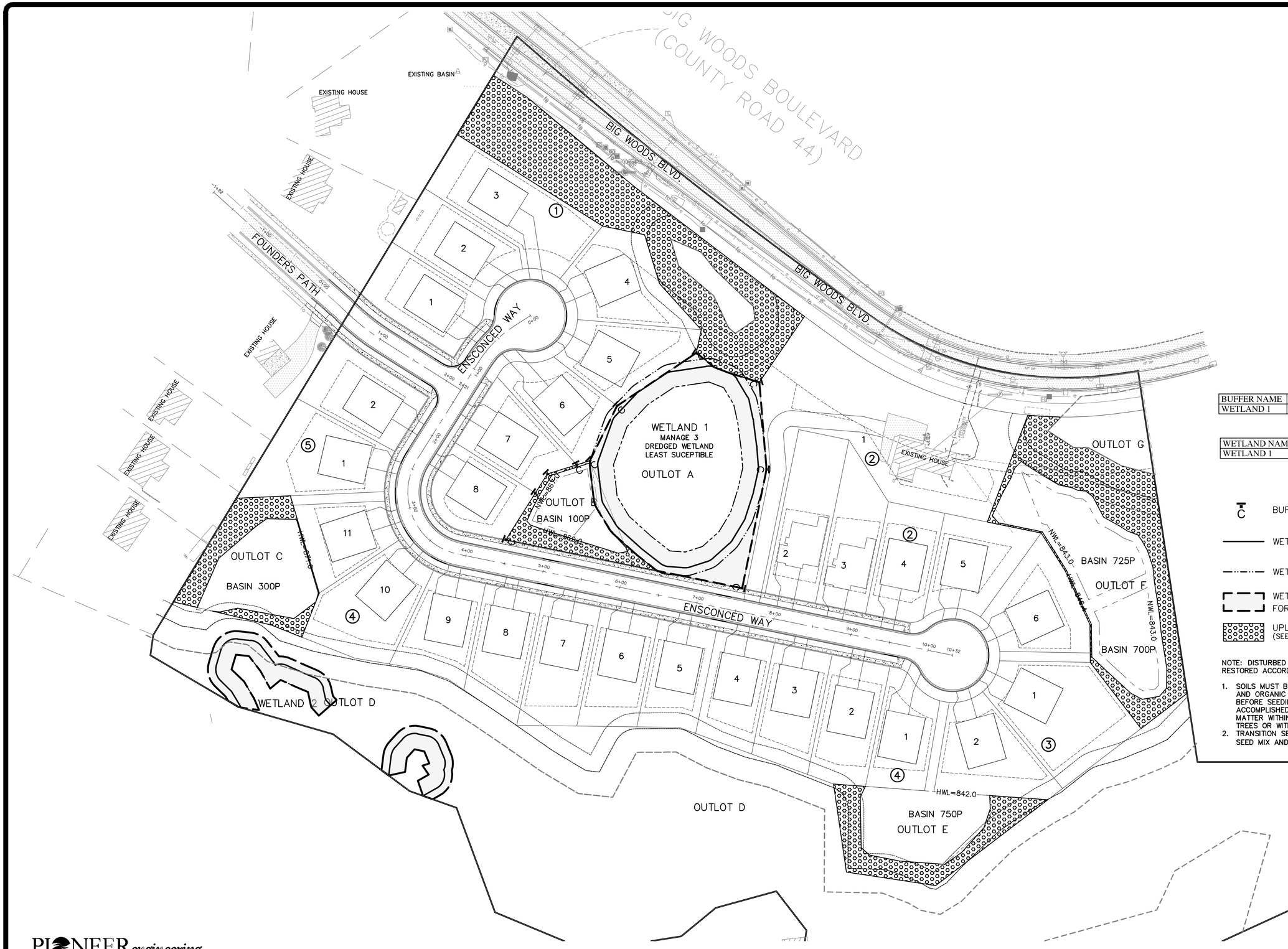

CURRENT ZONING: R1/O - LOW DENSITY RESIDENCE & OPEN DEVELOPMENT
PROPOSED ZONING: PUD

GROSS AREA=25.07 AC
CR44 AREA=0.77 AC
WETLAND AREA=0.61 AC
18% SLOPE AREA=5.40 AC
NET AREA (GROSS AREA - 18%SLOPES - WETLAND AREA - CR44 AREA) = 18.29 AC
NET DENSITY=1.6 UNITS/ACRE

R1 - LOW DENSITY RESIDENCE ZONING STANDARDS
- LOT AREA: 9,000 SF
- LOT WIDTH: 75'
- FRONT SETBACK: 30'
- REAR SETBACK: 30'
- SIDE SETBACK: 10' , 7'
- SIDE SETBACK CORNER: 15'

PUD PROPOSED STANDARDS
- LOT AREA: 9,600 SF
- LOT WIDTH: 65'
- FRONT SETBACK: 25'
- REAR SETBACK-INTERIOR: 25'
- REAR SETBACK-PERIMETER: 30'
- SIDE SETBACK: 5'
- SIDE SETBACK CORNER: 15'
- PROJECT PERIMETER SETBACK: 30'
- SETBACK FROM CL OF CR 44: 125'

SETBACK FROM 18% SLOPE: 50'
NO GRADING FROM 18% SLOPE: 30'

WETLAND BUFFER: 30' AVG. 20' MIN.
WETLAND SETBACK: 10' FROM BUFFER

BUFFER NAME	REQ'D. AREA (SF)	PROP. AREA (SF)
WETLAND 1	20,768	22,118

WETLAND NAME	IMPACT AREA (SF)
WETLAND 1	0

C BUFFER SIGN CONTACT CCWMO FOR SIGNS

WETLAND BUFFER 20' MINIMUM REQ'D

WETLAND BUFFER 30' AVG REQ'D

WETLAND BUFFER PROPOSED SEE SHEET 5.1 FOR SEEDING WITHIN BUFFER AREA

UPLAND PRESERVATION AREA 78,060 SF (SEED MIX 35-621 DRY PRAIRIE SOUTHEAST)

NOTE: DISTURBED AREAS WITHIN THE WETLAND BUFFER MUST BE RESTORED ACCORDING TO THE FOLLOWING STANDARDS

1. SOILS MUST BE DE-COMPACTED TO A DEPTH OF 18 INCHES AND ORGANIC MATTER MUST BE INCORPORATED INTO SOILS BEFORE SEEDING OR PLANTING. DECOMPACTION SHALL BE ACCOMPLISHED SOLELY BY INCORPORATION OF ORGANIC MATTER WITHIN THE DRIP LINE OR CRITICAL ROOT ZONE OF TREES OR WITHIN 10 FEET OF UNDERGROUND UTILITIES.
2. TRANSITION SETBACK AREAS SHALL BE PLANTED WITH NATIVE SEED MIX AND/OR NATIVE PLANTINGS APPROVED BY THE WMO

N

0 30 60 120
GRAPHIC SCALE IN FEET

01-ENG-120158-SHEET-WETL

PIONEER engineering
CIVIL ENGINEERS LAND PLANNERS LAND SURVEYORS LANDSCAPE ARCHITECTS
2422 Enterprise Drive
Mendota Heights, MN 55120
(651) 681-1914
Fax: 681-9488
www.pioneereng.com

I hereby certify that this plan was prepared by me or under my direct supervision and that I am a duly Licensed Professional Engineer under the laws of the State of Minnesota
Name Brian N. Molinaro
Reg. No. 47504 Date 05-03-2022

Revisions

Date 05-03-2022
Designed NAP
Drawn RZ

WETLAND BUFFER & UPLAND PRESERVATION PLAN

JOHNSON - REILAND
616 HIGHWAY 3
DUNDAS, MINNESOTA 55019

ENSCONCED WOODS
CHASKA, MINNESOTA

8.10 OF 36

© 2022 Pioneer Engineering, P.A.

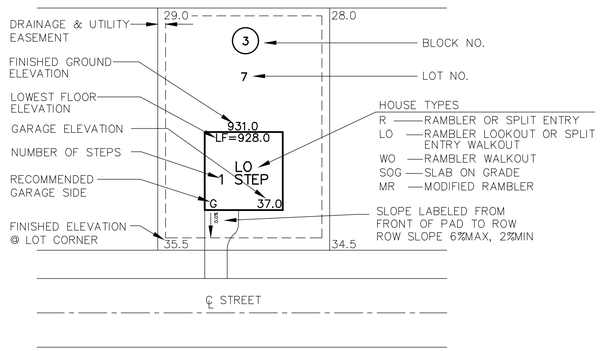

LOT INFORMATION
(TYPICAL SECTION NOT TO SCALE)

DRIVEWAY GRADES (SHOWN ON GRADING PLAN) FROM THE GARAGE TO THE ROW. DRIVEWAY GRADES WITHIN THE RIGHT-OF-WAY SHALL HAVE MINIMUN OF 2% WITH A MAXIMUM OF 6%.

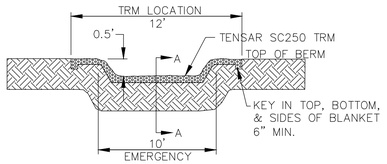

STABILIZED EMERGENCY OVERFLOW DETAIL
SECTION B-B

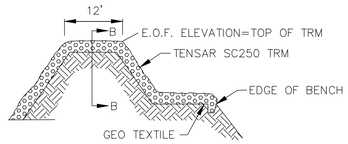

STABILIZED EMERGENCY OVERFLOW DETAIL
SECTION A-A

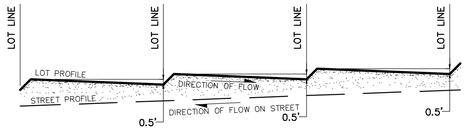

LOT BENCHING DETAIL
NO SCALE

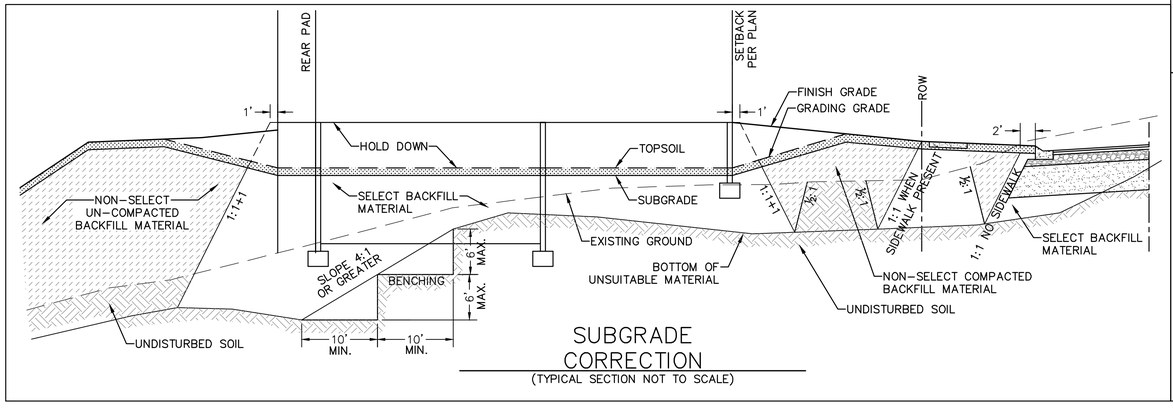

SUBGRADE CORRECTION
(TYPICAL SECTION NOT TO SCALE)

SINGLE FAMILY LOTS

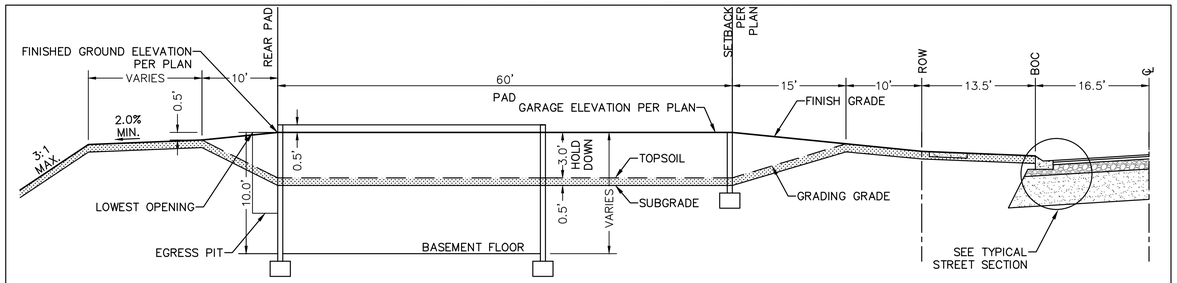

RAMBLER
(TYPICAL SECTION NOT TO SCALE)

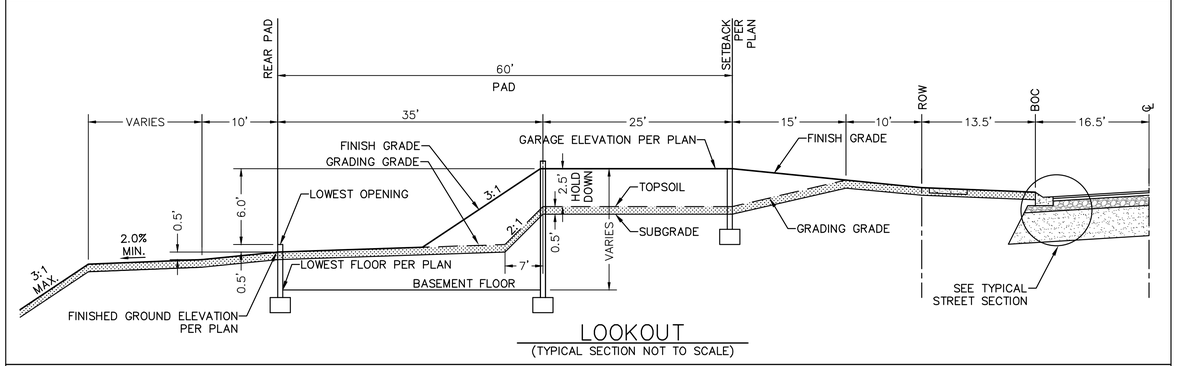

LOOKOUT
(TYPICAL SECTION NOT TO SCALE)

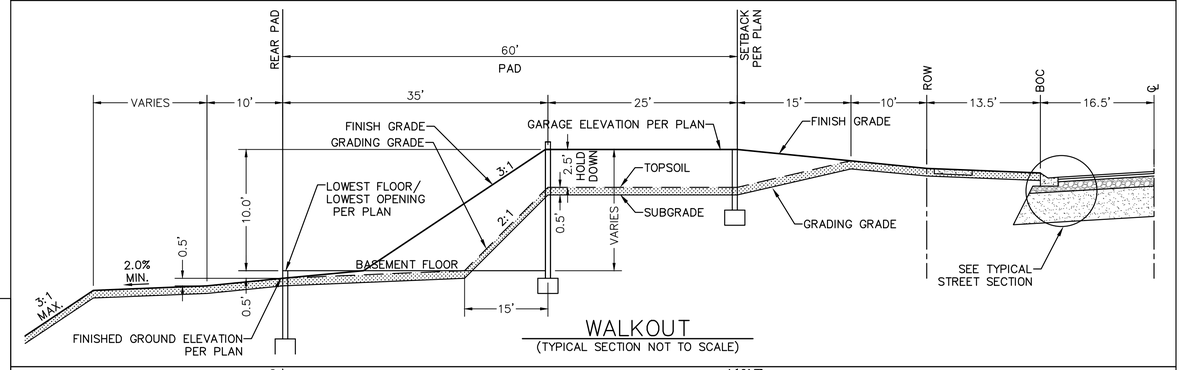

WALKOUT
(TYPICAL SECTION NOT TO SCALE)

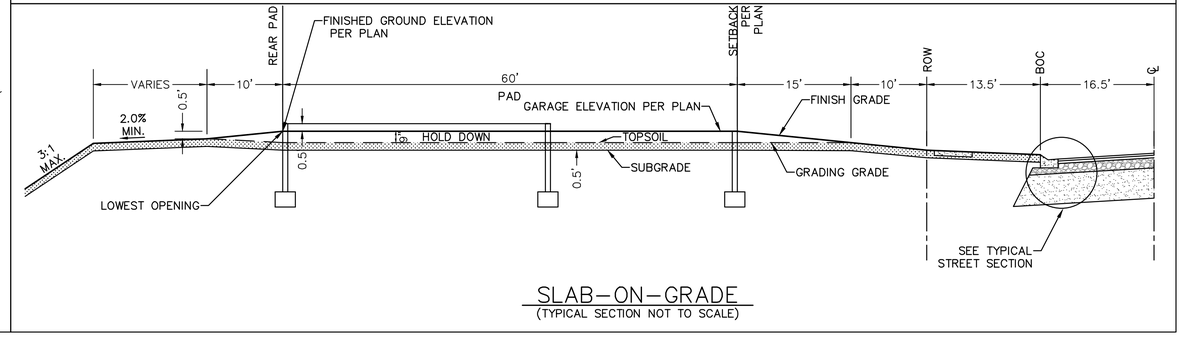

SLAB-ON-GRADE
(TYPICAL SECTION NOT TO SCALE)

PIONEERengineering
CIVIL ENGINEERS LAND PLANNERS LAND SURVEYORS LANDSCAPE ARCHITECTS
2422 Enterprise Drive
Mendota Heights, MN 55120
(651) 681-1914
Fax: 681-9488
www.pioneereng.com

I hereby certify that this plan was prepared by me or under my direct supervision and that I am a duly Licensed Professional Engineer under the laws of the State of Minnesota
Name Brian N. Molinaro
Reg. No. 47504 Date 05-03-2022

Revisions

Date	05-03-2022
Designed	NAP
Drawn	BZ
Checked	BNM

GRADING DETAILS

JOHNSON - REILAND
616 HIGHWAY 3
DUNDAS, MINNESOTA 55019

ENSCONCED WOODS
CHASKA, MINNESOTA

01-ENG-120158-SHEET-GRAD-DTLS

9.10 OF 36

© 2022 Pioneer Engineering, P.A.

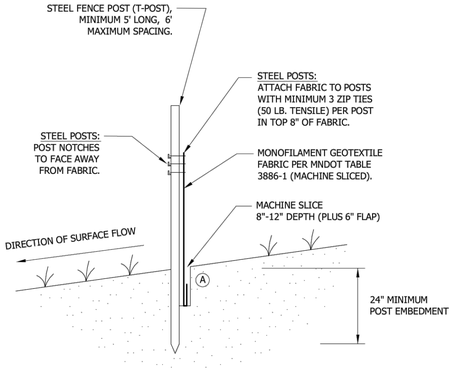

NOTE:
THE MACHINE SLICED METHOD (THIS DETAIL) IS THE STANDARD SILT FENCE INSTALLATION METHOD. HEAVY DUTY (ERO-1B) SILT FENCE INSTALLATION METHODS SHOULD ONLY BE USED WHEN APPROVED OR DIRECTED BY THE CITY.

(A) COMPACTION:
AFTER "SLICING" IN THE FABRIC AND *BEFORE* INSTALLATION OF STEEL POSTS, DRIVE INSTALLATION EQUIPMENT OVER THE "SLICE" WHILE FABRIC IS LAYING ON THE GROUND. *THEN* INSTALL THE POSTS AND PULL UP FABRIC TO ATTACH AT A UNIFORM HEIGHT.

Stantec
2335 Highway 36 W
St. Paul, MN 55113
www.stantec.com

SILT FENCE
MACHINE SLICED
CHASKA, MN

LAST REVISION: APRIL 2011
PLATE NO. ERO-1A

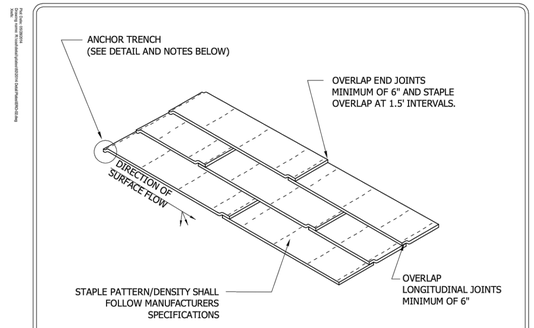

ANCHOR TRENCH
1. DIG 6" X 6" TRENCH
2. LAY BLANKET IN TRENCH
3. STAPLE AT 1.5' INTERVALS
4. BACKFILL WITH NATURAL SOIL AND COMPACT
5. BLANKET LENGTH SHALL NOT EXCEED 100' WITHOUT AN ANCHOR TRENCH

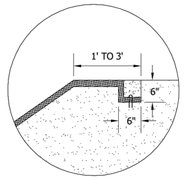

NOTE:
SLOPE SURFACE SHALL BE FREE OF ROCKS, SOIL CLUMPS, STICKS, VEHICLE IMPRINTS, AND GRASS. BLANKETS SHALL HAVE GOOD SOIL CONTACT.

Stantec
2335 Highway 36 W
St. Paul, MN 55113
www.stantec.com

EROSION CONTROL BLANKET INSTALLATION
CHASKA, MINNESOTA

LAST REVISION: APRIL 2008
PLATE NO. ERO-2

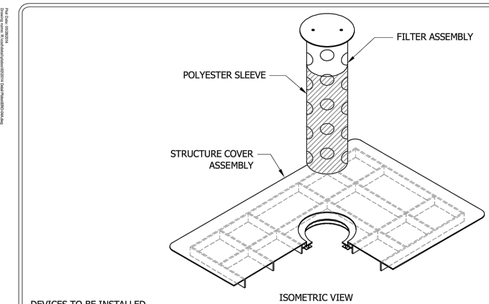

DEVICES TO BE INSTALLED IMMEDIATELY UPON INSTALLATION OF CONCRETE STRUCTURE OR TOP SLAB.

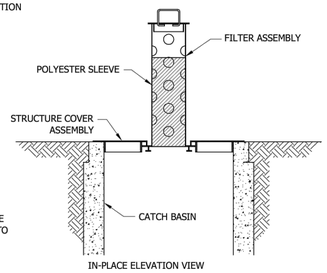

NOTE: ALL OTHER INLET PROTECTION DEVICES MUST BE APPROVED BY OWNER PRIOR TO INSTALLATION.

Stantec
2335 Highway 36 W
St. Paul, MN 55113
www.stantec.com

INLET PROTECTION FOR CATCH BASIN BEFORE CURB CONSTRUCTION
CHASKA, MINNESOTA

LAST REVISION: APRIL 2008
PLATE NO. ERO-4A

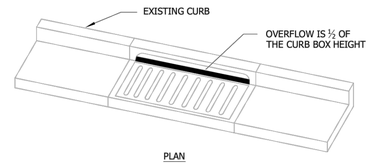

PLAN

WIMCO ROAD DRAIN CG-23* HIGH FLOW INLET PROTECTION CURB AND GUTTER MODEL OR CITY APPROVED EQUAL.

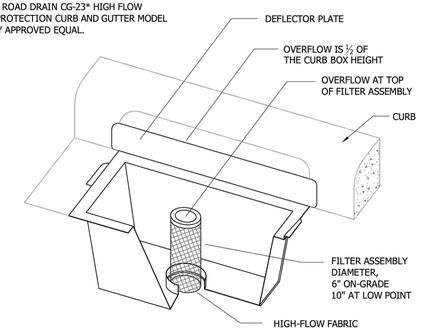

* FOR THE NEW R-3290-VB STANDARD CASTING, INSTALL WIMCO ROAD DRAIN CG-3290 OR CITY APPROVED EQUAL.

Stantec
2335 Highway 36 W
St. Paul, MN 55113
www.stantec.com

INLET PROTECTION - CATCH BASIN INSERT AFTER CURB CONSTRUCTION
CHASKA, MINNESOTA

LAST REVISION: APRIL 2008
PLATE NO. ERO-4B

DEVICES TO BE INSTALLED IMMEDIATELY UPON INSTALLATION OF CONCRETE STRUCTURE CONE OR TOP SLAB.

DEVICES SHOWN ARE AS MANUFACTURED BY WIMCO. MODEL NO. OF UNIT SHOWN: RD 27.

OTHER APPROVED INLET PROTECTION DEVICES FOR BEEHIVE CASTINGS ARE:
- ROYAL ENTERPRISES - MODEL NO 27 INFRASAFE SEDIMENT CONTROL BARRIER - DG.
- PRE MANUFACTURED UNIT BY CIRCLE "H" ENTERPRISES.

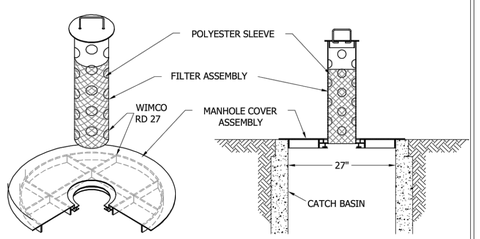

Stantec
2335 Highway 36 W
St. Paul, MN 55113
www.stantec.com

INLET PROTECTION BEEHIVE CASTING
CHASKA, MINNESOTA

LAST REVISION: APRIL 2008
PLATE NO. ERO-4C

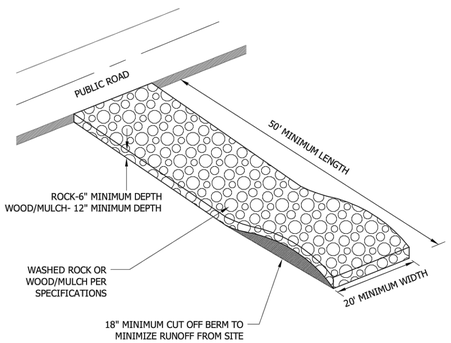

NOTES:
1. MnDOT 3733 TYPE 4 FILTER FABRIC SHALL BE PLACED UNDER ROCK OR MULCH TO STOP MUD MIGRATION THROUGH MATERIAL.
2. FUGITIVE ROCK OR MULCH WILL BE REMOVED FROM ADJACENT ROADWAYS DAILY OR MORE FREQUENTLY AS NECESSARY.
3. CONSTRUCTION ENTRANCE MUST BE CONSTRUCTED PRIOR TO THE COMMENCEMENT OF GRADING OPERATIONS ON THE SITE.
4. THE ENTRANCE MUST BE MAINTAINED IN PROPER CONDITION TO PREVENT TRACKING OF MUD OFF THE SITE. THIS MAY REQUIRE PERIODIC TOPDRESSING WITH ADDITIONAL ROCK, WOOD/MULCH, OR REMOVAL AND REINSTALLATION OF THE PAD.
5. THIS ENTRANCE WILL BE USED BY ALL VEHICLES ENTERING OR LEAVING THE PROJECT.
6. THE CONSTRUCTION ENTRANCE WILL BE REMOVED PRIOR TO THE PLACEMENT OF BITUMINOUS SURFACING.

Stantec
2335 Highway 36 W
St. Paul, MN 55113
www.stantec.com

ROCK CONSTRUCTION ENTRANCE
CHASKA, MINNESOTA

LAST REVISION: APRIL 2008
PLATE NO. ERO-7

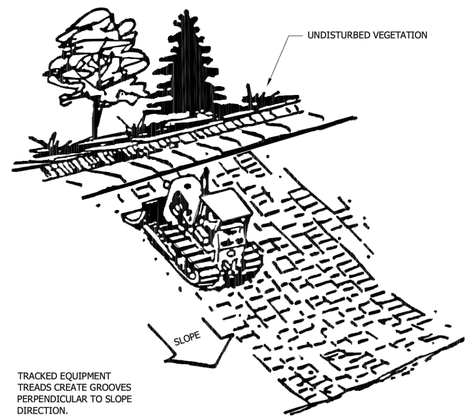

TRACKED EQUIPMENT TREADS CREATE GROOVES PERPENDICULAR TO SLOPE DIRECTION.

NOTE:
ALL SLOPES WITH A GRADE EQUAL TO OR STEEPER THAN 3:1 REQUIRE SLOPE TRACKING. SLOPES WITH A GRADE MORE GRADUAL THAN 3:1 REQUIRE SLOPE TRACKING IF THE STABILIZATION METHOD IS EROSION CONTROL BLANKET OR HYDROMULCH.

Stantec
2335 Highway 36 W
St. Paul, MN 55113
www.stantec.com

SLOPE TRACKING
CHASKA, MINNESOTA

LAST REVISION: FEB 2004
PLATE NO. ERO-10

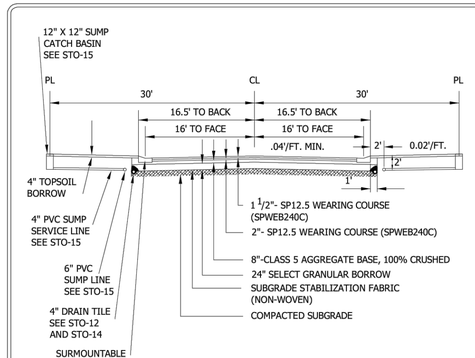

STANDARD STREET SECTION (7 TON)

NOTES:
1. ALL ORGANIC OR OTHER UNSUITABLE MATERIALS SHALL BE REMOVED FROM BENEATH THE ROADWAY.
2. A TEST ROLL OF THE PREPARED SUBGRADE SHALL BE PERFORMED BY THE OWNER IN THE PRESENCE OF A CITY INSPECTOR. THE CITY HAS THE AUTHORITY TO REQUIRE ADDITIONAL SUBGRADE CORRECTION OR ELIMINATE THE STABILIZATION FABRIC.
3. THE CITY RESERVES THE RIGHT TO MODIFY STREET SECTION AS REQUIRED.
4. NO CONCRETE WORK OR BITUMINOUS PAVING SHALL OCCURE AFTER OCTOBER 31ST UNLESS AUTHORIZED BY THE CITY OF CHASKA.
5. STREET WIDTH TO BE DETERMINED BY PROJECTED TRAFFIC VOLUMES.
6. RECYCLE MATERIAL ACCEPTED AS CLASS 5 AGGREGATE BASE SUBSTITUTE IF MEETING GUIDELINES.

Stantec
2335 Highway 36 W
St. Paul, MN 55113
www.stantec.com

TYPICAL SECTIONS FOR RESIDENTIAL STREETS 7 TON SECTION
CHASKA, MINNESOTA

LAST REVISION: JUNE 2012
PLATE NO. STR-7

PIONEERengineering
CIVIL ENGINEERS LAND PLANNERS LAND SURVEYORS LANDSCAPE ARCHITECTS
2422 Enterprise Drive
Mendota Heights, MN 55120
(651) 681-1914
Fax: 681-9488
www.pioneereng.com

I hereby certify that this plan was prepared by me or under my direct supervision and that I am a duly Licensed Professional Engineer under the laws of the State of Minnesota
Name: Brian N. Molinaro
Reg. No. 47504 Date 05-03-2022

Revisions

Date 05-03-2022
Designed NAP
Drawn BZ
Checked BNM

GRADING DETAILS

JOHNSON - REILAND
616 HIGHWAY 3
DUNDAS, MINNESOTA 55019

ENSCONCED WOODS
CHASKA, MINNESOTA

01-ENG-120158-SHEET-GRAD-DTLS

© 2022 Pioneer Engineering, P.A.

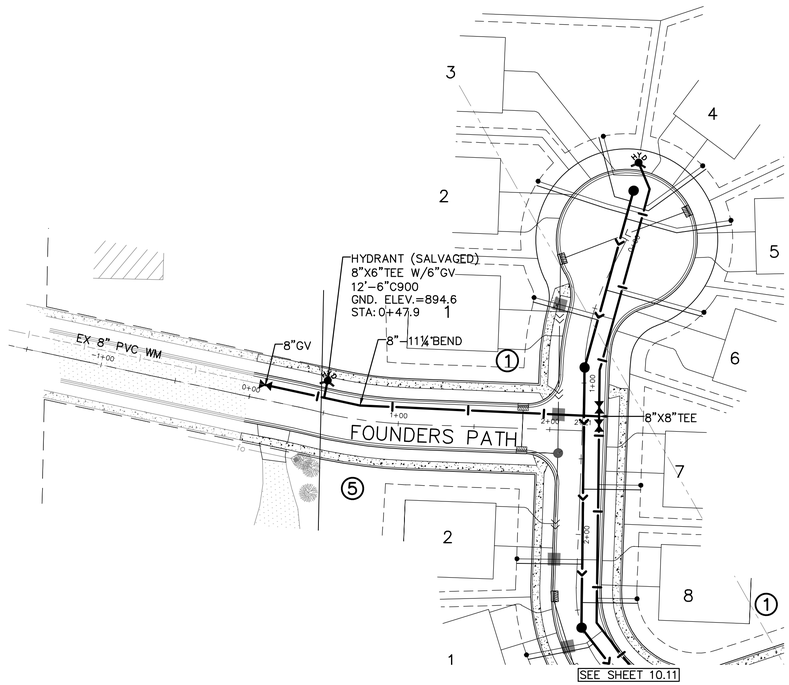

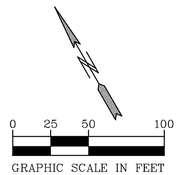

SANITARY & WATERMAIN CONSTRUCTION NOTES:

1. SANITARY SEWER SERVICE WYES ARE STATIONED FROM DOWNSTREAM MANHOLES.
2. ALL SANITARY SEWER & WATER MAIN SERVICES SHALL TERMINATE AT 10' PAST ROW.
3. ALL SANITARY SEWER SERVICES AND RISERS SHALL BE 4" PVC, SCHEDULE 40, 6 SOLVENT WELD JOINT (NON-GASKETED), WITH A MINIMUM SERVICE GRADE OF 2%.
4. ALL SANITARY SEWER SERVICES WILL HAVE A TRACER WIRE FROM THE MAIN LINE AND EXTENDED TO THE SURFACE AT TRACER WIRE BOX.
5. WATER SERVICES ARE 3' UP STREAM FROM SANITARY SERVICE WITH A MIN 7.5' BURY.
6. ALL WATER SERVICES SHALL BE 1" HDPE UNLESS OTHERWISE NOTED.
7. ALL WATER MAIN SHALL BE C-900 DR-18 UNLESS OTHERWISE NOTED. ALL PVC WATERMAIN SHALL HAVE TRACER WIRE INSTALLED PER CITY STANDARDS.
8. ALL UTILITY CONFLICTS SHALL BE RESOLVED ACCORDING TO CITY STANDARD SPECIFICATIONS.
9. CONTRACTOR IS RESPONSIBLE FOR ALL TRENCH DESIGN AND MEETING ALL OSHA REGULATIONS.
10. MAINTAIN 10' HORIZONTAL AND 1.5' VERTICAL SEPARATION BETWEEN SANITARY SEWER AND WATERMAIN.
11. SANITARY SEWER INVERT ELEVATIONS ARE AT END OF SERVICE.
12. ACTIVATION OF WATERMAIN SYSTEM SHALL BE PERFORMED BY CITY PERSONNEL ONLY.
13. DEFLECTION TESTING FOR ALL NON-RIGID PIPE SHALL BE CONDUCTED AFTER THE FINAL BACKFILL HAS BEEN IN PLACE FOR 30 DAYS.
14. THE SEWER AND WATER SERVICE SHALL BE INCLUDED IN THE PRESSURE AND LEAKAGE TESTING REQUIREMENTS FOR THE MAIN LINES.
15. ALL DISTURBED AREAS TO BE SEEDED AND MULCHED WITH MNDOT MIXTURE 240 AT 75 POUNDS PER ACRE, AND MULCH SHALL BE MNDOT TYPE 3 @ 2 TONS PER ACRE.

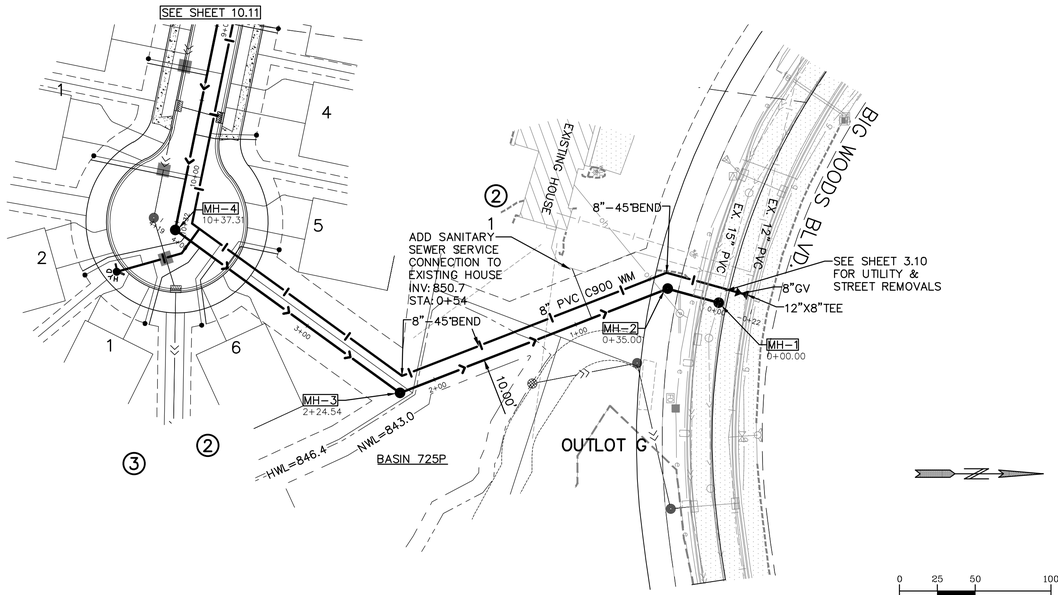

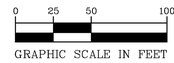

BENCH MARK
TOP NUT HYDRANT AT NORTHWEST CORNER OF FOUNDERS PATH AND DAKOTA COURT
EL=896.15 (NAVD88)

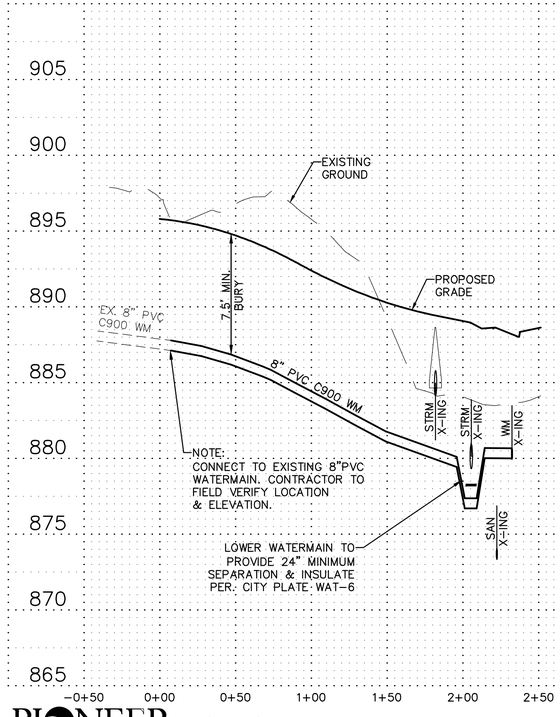

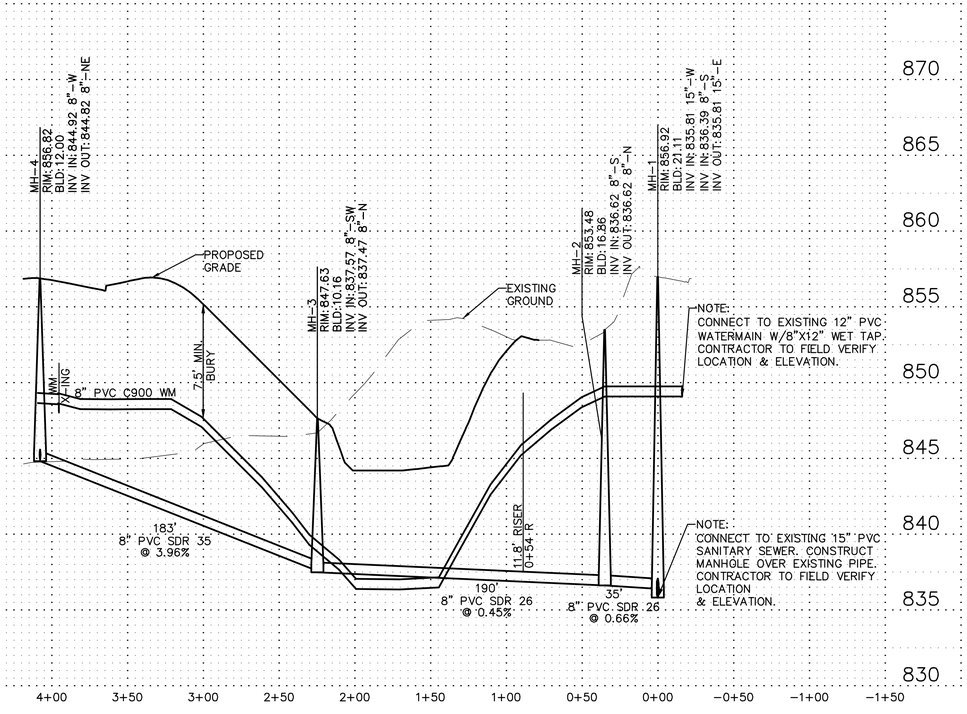

01-ENG-120158-SHEET-SSWR

PIONEER engineering
CIVIL ENGINEERS LAND PLANNERS LAND SURVEYORS LANDSCAPE ARCHITECTS
2422 Enterprise Drive
Mendota Heights, MN 55120
(651) 681-1914
Fax: 681-9488
www.pioneereng.com

I hereby certify that this plan was prepared by me or under my direct supervision and that I am a duly Licensed Professional Engineer under the laws of the State of Minnesota
Name: Brian N. Molinaro
Reg. No. 47504 Date 05-03-2022

Revisions

Date	05-03-2022
Designed	NAP
Drawn	RC
Checked	BNM

SANITARY SEWER & WATER MAIN CONSTRUCTION

JOHNSON - REILAND
616 HIGHWAY 3
DUNDAS, MINNESOTA 55019

ENSCONCED WOODS
CHASKA, MINNESOTA

10.10 OF 36

6.B. Recommend Approval of the Final
Page 32 of 59
© 2022 Pioneer Engineering, P.A.

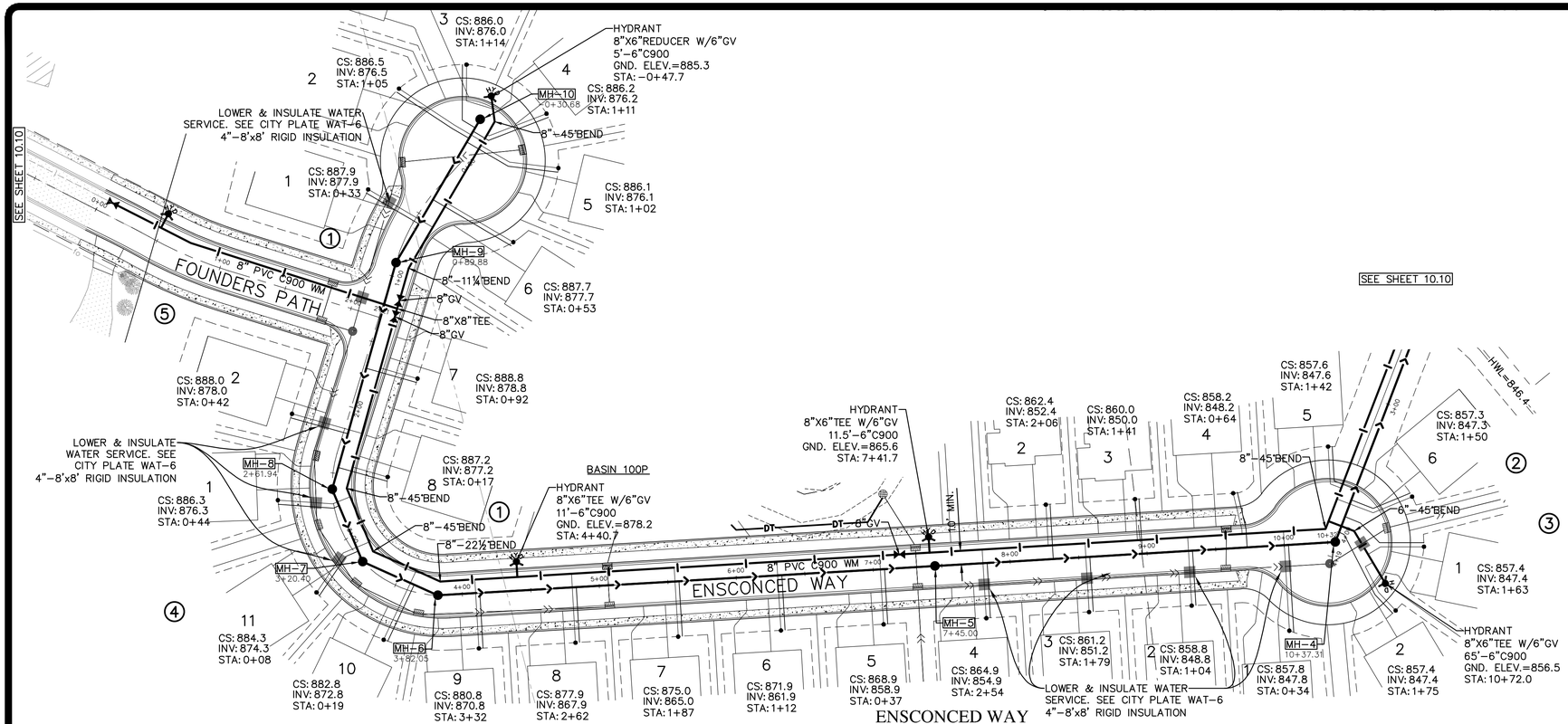

0 25 50 100

GRAPHIC SCALE IN FEET

SANITARY & WATERMAIN CONSTRUCTION NOTES:

1. SANITARY SEWER SERVICE WYES ARE STATIONED FROM DOWNSTREAM MANHOLES.
2. ALL SANITARY SEWER & WATER MAIN SERVICES SHALL TERMINATE AT 10' PAST ROW.
3. ALL SANITARY SEWER SERVICES AND RISERS SHALL BE 4" PVC, SCHEDULE 40, 6 SOLVENT WELD JOINT (NON-GASKETED), WITH A MINIMUM SERVICE GRADE OF 2%.
4. ALL SANITARY SEWER SERVICES WILL HAVE A TRACER WIRE FROM THE MAIN LINE AND EXTENDED TO THE SURFACE AT TRACER WIRE BOX.
5. WATER SERVICES ARE 3' UP STREAM FROM SANITARY SERVICE WITH A MIN 7.5' BURY.
6. ALL WATER SERVICES SHALL BE 1" HDPE UNLESS OTHERWISE NOTED.
7. ALL WATER MAIN SHALL BE C-900 DR-18 UNLESS OTHERWISE NOTED. ALL PVC WATERMAIN SHALL HAVE TRACER WIRE INSTALLED PER CITY STANDARDS.
8. ALL UTILITY CONFLICTS SHALL BE RESOLVED ACCORDING TO CITY STANDARD SPECIFICATIONS.
9. CONTRACTOR IS RESPONSIBLE FOR ALL TRENCH DESIGN AND MEETING ALL OSHA REGULATIONS.
10. MAINTAIN 10' HORIZONTAL AND 1.5' VERTICAL SEPARATION BETWEEN SANITARY SEWER AND WATERMAIN.
11. SANITARY SEWER INVERT ELEVATIONS ARE AT END OF SERVICE.
12. ACTIVATION OF WATERMAIN SYSTEM SHALL BE PERFORMED BY CITY PERSONNEL ONLY.
13. DEFLECTION TESTING FOR ALL NON-RIGID PIPE SHALL BE CONDUCTED AFTER THE FINAL BACKFILL HAS BEEN IN PLACE FOR 30 DAYS.
14. THE SEWER AND WATER SERVICE SHALL BE INCLUDED IN THE PRESSURE AND LEAKAGE TESTING REQUIREMENTS FOR THE MAIN LINES.
15. ALL DISTURBED AREAS TO BE SEEDED AND MULCHED WITH MNDOT MIXTURE 240 AT 75 POUNDS PER ACRE, AND MULCH SHALL BE MNDOT TYPE 3 @ 2 TONS PER ACRE.

BENCH MARK

TOP NUT HYDRANT AT NORTHWEST CORNER OF FOUNDERS PATH AND DAKOTA COURT
EL=896.15 (NAVD88)

01-ENG-120158-SHEET-SSWR

PIONEER engineering
CIVIL ENGINEERS LAND PLANNERS LAND SURVEYORS LANDSCAPE ARCHITECTS
2422 Enterprise Drive
Mendota Heights, MN 55120
(651) 681-1914
Fax: 681-9488
www.pioneereng.com

I hereby certify that this plan was prepared by me or under my direct supervision and that I am a duly Licensed Professional Engineer under the laws of the State of Minnesota
Name: Brian N. Molinaro
Reg. No. 47504 Date 05-03-2022

Revisions

Date 05-03-2022
Designed NAP
Drawn RC
Checked

SANITARY SEWER & WATER MAIN CONSTRUCTION

JOHNSON - REILAND
616 HIGHWAY 3
DUNDAS, MINNESOTA 55019

ENSCONCED WOODS
CHASKA, MINNESOTA

10.11 OF 36

© 2022 Pioneer Engineering, P.A.

STRUCTURE TABLE				
STRUCTURE NAME	TYPE	STRUCTURE SIZE	NEENAH CASTING OR EQUAL	NOTES
W1	OCS	60" DIA.	SPECIAL	
100	OCS	60" DIA.	SPECIAL	
102	CBMH	48" DIA.	R-3067 V	1
103	CBMH	48" DIA.	R-3067 V	
104	CBMH	48" DIA.	R-3067 V	
105	CBMH	48" DIA.	R-3067 V	
106	CBMH	48" DIA.	R-3067 V	
107	CBMH	48" DIA.	R-3067 V	
108	STMH	48" DIA.	R-1642	
109	CBMH	48" DIA.	R-3067 V	
110	CB	36"X24"	R-3290-VB	
111	CBMH	48" DIA.	R-3067 V	
112	CB	36"X24"	R-3067 V	1
300	OCS	60" DIA.	SPECIAL	
700	OCS	60" DIA.	SPECIAL	
702	STMH	48" DIA.	R-1642	
703	CBMH	48" DIA.	R-3290-VB	
704	STMH	48" DIA.	R-1642	
705	CBMH	48" DIA.	R-3067 V	
706	CBMH	48" DIA.	R-3067 V	
707	CBMH	48" DIA.	R-3067 V	1
711	CB	36"X24"	R-3501 TR	1
721	CB	27" DIA.	R-4341-A	
730	OCS	60" DIA.	SPECIAL	
731	STMH	48" DIA.	R-1642	
732	STMH	48" DIA.	R-1642	
750	OCS	60" DIA.	SPECIAL	
752	CB	27" DIA.	R-4341-A	
762	STMH	48" DIA.	R-1642	

STORM STRUCTURE TABLE NOTES:
1. WATER TIGHT STRUCTURES
   A. STRUCTURE SHALL HAVE AN INTEGRAL BASE
   B. PIPE CONNECTION TO STRUCTURE WITH PRESS-SEAL WATER STOP GROUT RING OR APPROVED EQUAL.
   C. PIPE JOINTS WITHIN 10' OF WATERMAIN WILL BE TONGUE AND GROOVE WITH A HAMILTON KENT SUPERSEAL GASKET OR APPROVED EQUAL MEETING ASTM-443
   D. ALL MH JOINTS WILL BE TONGUE AND GROOVE WITH A HAMILTON KENT SUPERSEAL GASKET OR APPROVED EQUAL MEETING ASTM-443.

STORM SEWER CONSTRUCTION NOTES:
1. PROVIDE R-3067V OR R-3067VB, AT LOW POINTS, NEENAH CASTINGS OR APPROVED EQUAL ON ALL CATCH BASINS UNLESS OTHERWISE NOTED.
2. PROVIDE 24"x36" SLAB OPENING FOR R-3067V NEENAH CASTINGS ON ALL CATCH BASIN MANHOLES UNLESS OTHERWISE NOTED.
3. FINAL STRUCTURE OFF-SET TO BE VERIFIED BY CONTRACTOR AND INSPECTOR BASED ON MATERIAL SUPPLIED TO PROJECT. FIELD STAKING SET ACCORDING TO BACK-OF-CURB.
4. ALL DISTURBED AREAS TO BE SEEDED AND MULCHED WITH MNDOT MIXTURE 240 AT 75 POUNDS PER ACRE, AND MULCH SHALL BE MNDOT TYPE 3 @ 2 TONS PER ACRE.

NOTE:
SEE SHEETS 11.40-11.43 FOR OUTLET CONTROL STRUCTURE DETAILS.

NOTE:
SEE SHEETS 11.10 FOR STORM SEWER STRUCTURE SCHEDULE.

BENCH MARK
TOP NUT HYDRANT AT NORTHWEST CORNER OF FOUNDERS PATH AND DAKOTA COURT
EL=896.15 (NAVD88)

PIONEER engineering
CIVIL ENGINEERS LAND PLANNERS LAND SURVEYORS LANDSCAPE ARCHITECTS
2422 Enterprise Drive
Mendota Heights, MN 55120
(651) 681-1914
Fax: 681-9488
www.pioneereng.com

I hereby certify that this plan was prepared by me or under my direct supervision and that I am a duly Licensed Professional Engineer under the laws of the State of Minnesota
Name Brian N. Molinaro
Reg. No. 47504 Date 05-03-2022

Revisions

Date 05-03-2022
Designed NAP
Drawn BZ
Checked BNM

STORM SEWER SCHEDULE

JOHNSON - REILAND
616 HIGHWAY 3
DUNDAS, MINNESOTA 55019

ENSCONCED WOODS
CHASKA, MINNESOTA

11.10 OF 36

01-ENG-120158-SHEET-STRM-SCHD

© 2022 Pioneer Engineering, P.A.

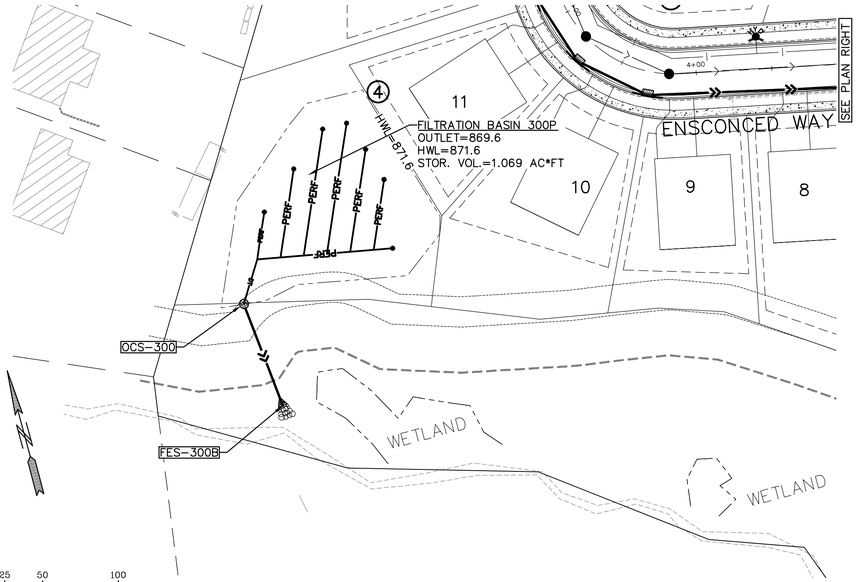

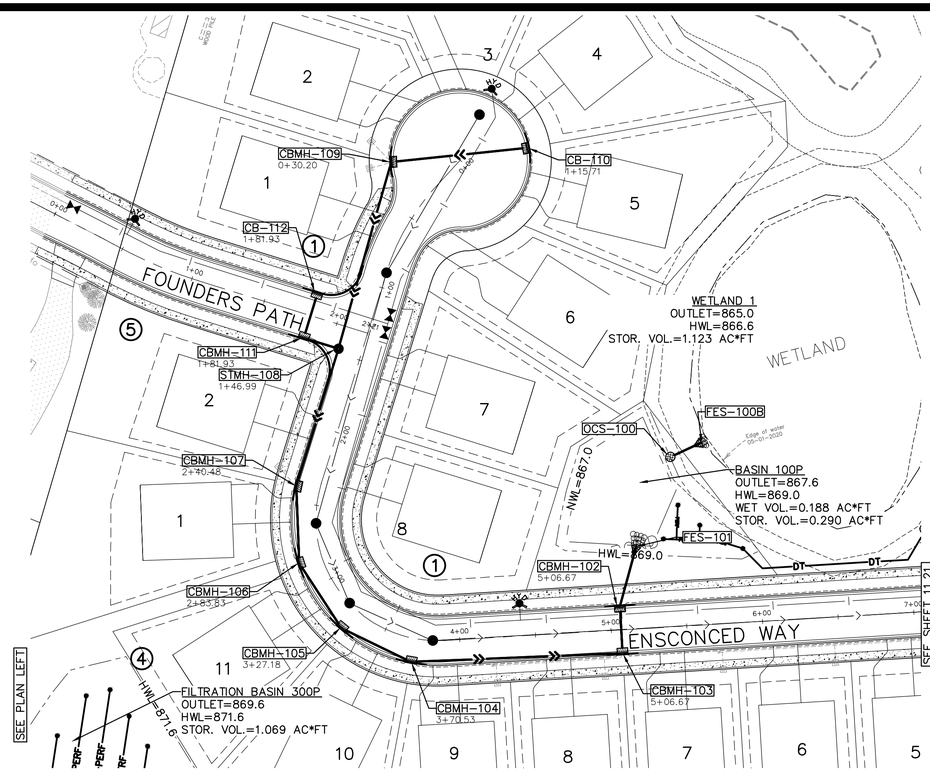

STORM SEWER CONSTRUCTION NOTES:

1. PROVIDE R-3067V OR R-3067VB, AT LOW POINTS, NEENAH CASTINGS OR APPROVED EQUAL ON ALL CATCH BASINS UNLESS OTHERWISE NOTED.
2. PROVIDE 24"x36" SLAB OPENING FOR R-3067V NEENAH CASTINGS ON ALL CATCH BASIN MANHOLES UNLESS OTHERWISE NOTED.
3. FINAL STRUCTURE OFF-SET TO BE VERIFIED BY CONTRACTOR AND INSPECTOR BASED ON MATERIAL SUPPLIED TO PROJECT. FIELD STAKING SET ACCORDING TO BACK-OF-CURB.
4. ALL DISTURBED AREAS TO BE SEEDED AND MULCHED WITH MNDOT MIXTURE 240 AT 75 POUNDS PER ACRE, AND MULCH SHALL BE MNDOT TYPE 3 @ 2 TONS PER ACRE.

NOTE:
SEE SHEETS 11.40-11.43 FOR OUTLET CONTROL STRUCTURE DETAILS.

NOTE:
SEE SHEETS 11.10 FOR STORM SEWER STRUCTURE SCHEDULE.

BENCH MARK
TOP NUT HYDRANT AT NORTHWEST CORNER OF FOUNDERS PATH AND DAKOTA COURT
EL=896.15 (NAVD88)

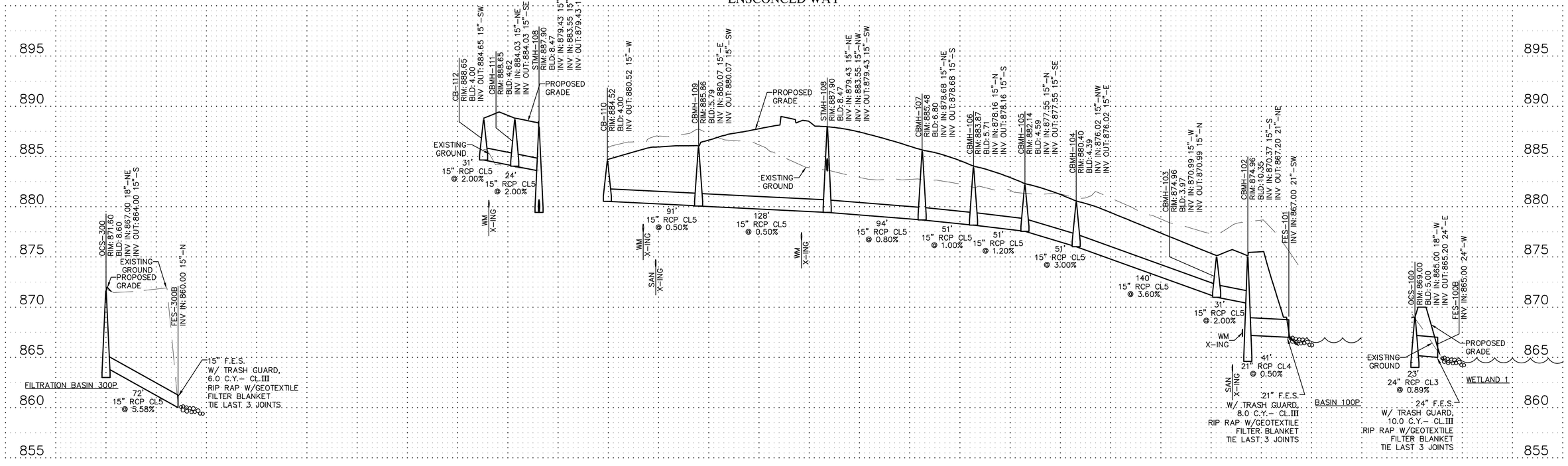

I hereby certify that this plan was prepared by me or under my direct supervision and that I am a duly Licensed Professional Engineer under the laws of the State of Minnesota
Name Brian N. Molinaro
Reg. No. 47504 Date 05-03-2022

Revisions

Date 05-03-2022
Designed NAP
Drawn PC
Checked BNM

STORM SEWER CONSTRUCTION

JOHNSON - REILAND
616 HIGHWAY 3
DUNDAS, MINNESOTA 55019

ENSCONCED WOODS
CHASKA, MINNESOTA

© 2022 Pioneer Engineering, P.A.

STORM SEWER CONSTRUCTION NOTES:

1. PROVIDE R-3067V OR R-3067VB, AT LOW POINTS, NEENAH CASTINGS OR APPROVED EQUAL ON ALL CATCH BASINS UNLESS OTHERWISE NOTED.
2. PROVIDE 24"x36" SLAB OPENING FOR R-3067V NEENAH CASTINGS ON ALL CATCH BASIN MANHOLES UNLESS OTHERWISE NOTED.
3. FINAL STRUCTURE OFF-SET TO BE VERIFIED BY CONTRACTOR AND INSPECTOR BASED ON MATERIAL SUPPLIED TO PROJECT. FIELD STAKING SET ACCORDING TO BACK-OF-CURB.
4. ALL DISTURBED AREAS TO BE SEEDED AND MULCHED WITH MNDOT MIXTURE 240 AT 75 POUNDS PER ACRE, AND MULCH SHALL BE MNDOT TYPE 3 @ 2 TONS PER ACRE.

NOTE:
SEE SHEETS 11.40-11.43 FOR OUTLET CONTROL STRUCTURE DETAILS.

NOTE:
SEE SHEETS 11.10 FOR STORM SEWER STRUCTURE SCHEDULE.

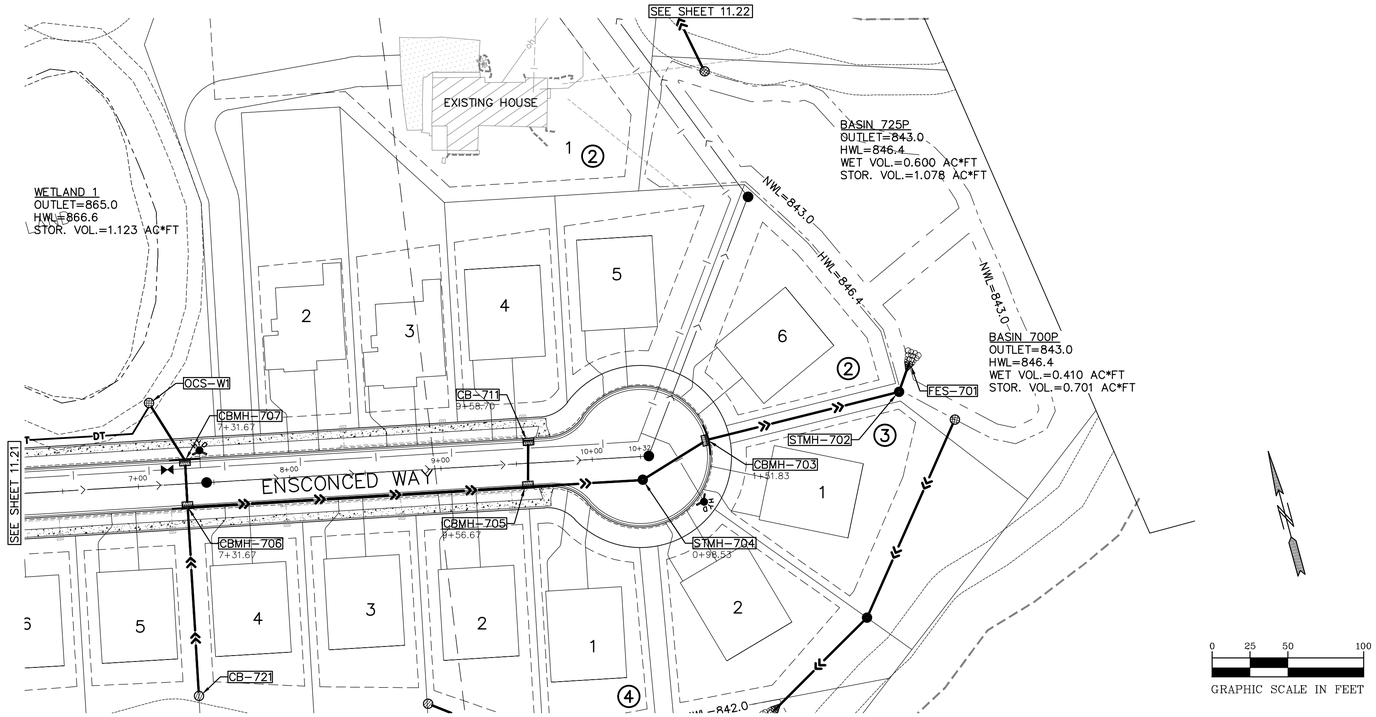

BENCH MARK
TOP NUT HYDRANT AT NORTHWEST CORNER OF FOUNDERS PATH AND DAKOTA COURT
EL=896.15 (NAVD88)

ENSCONCED WAY

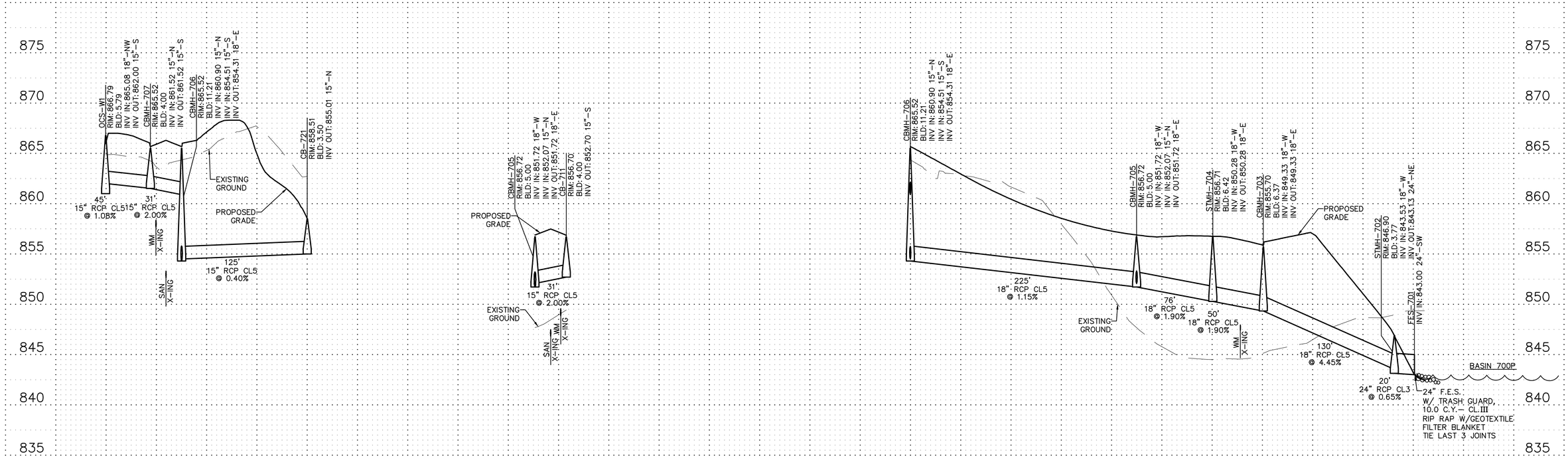

PIONEER engineering
CIVIL ENGINEERS LAND PLANNERS LAND SURVEYORS LANDSCAPE ARCHITECTS
2422 Enterprise Drive
Mendota Heights, MN 55120
(651) 681-1914
Fax: 681-9488
www.pioneereng.com

I hereby certify that this plan was prepared by me or under my direct supervision and that I am a duly Licensed Professional Engineer under the laws of the State of Minnesota
Name: Brian N. Molinaro
Reg. No. 47504 Date 05-03-2022

Revisions

Date 05-03-2022
Designed NAP
Drawn RC
Checked BNM

STORM SEWER CONSTRUCTION

JOHNSON - REILAND
616 HIGHWAY 3
DUNDAS, MINNESOTA 55019

ENSCONCED WOODS
CHASKA, MINNESOTA

11.21 OF 36

01-ENG-120158-SHEET-STRM

© 2022 Pioneer Engineering, P.A.

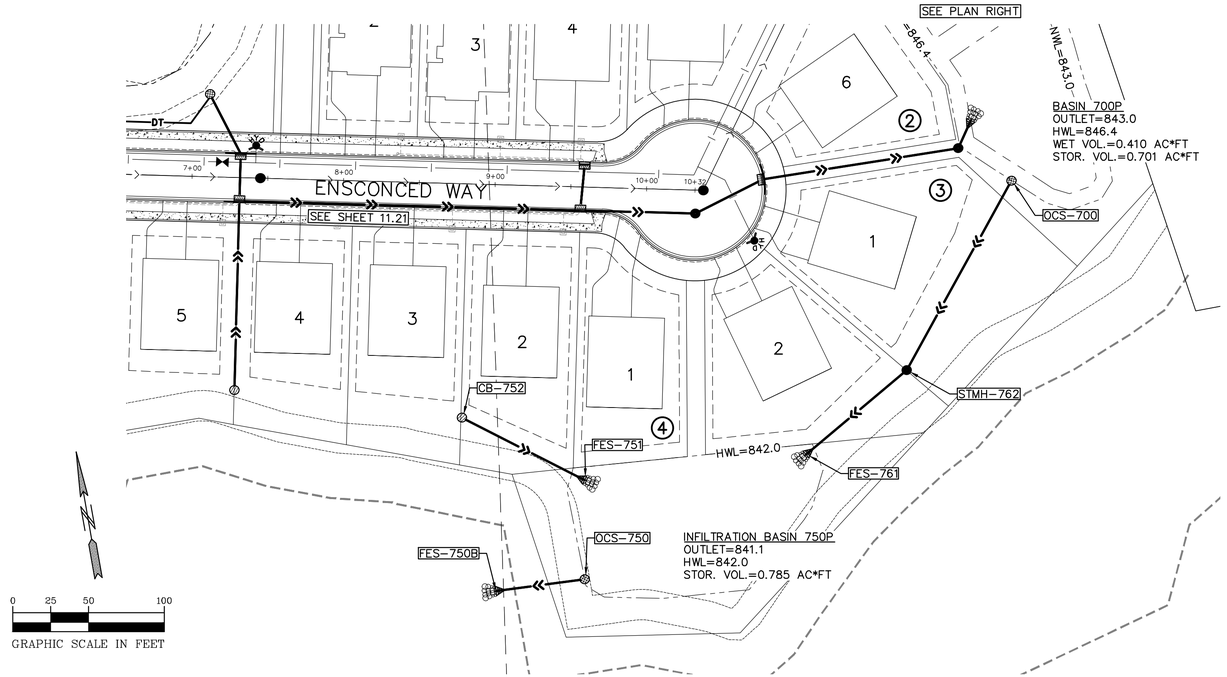

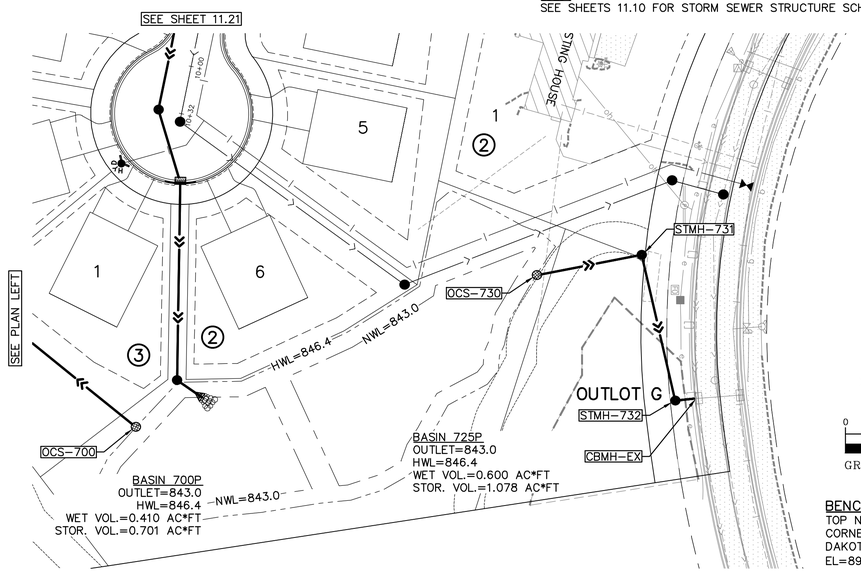

STORM SEWER CONSTRUCTION NOTES:

1. PROVIDE R-3067V OR R-3067VB, AT LOW POINTS, NEENAH CASTINGS OR APPROVED EQUAL ON ALL CATCH BASINS UNLESS OTHERWISE NOTED.
2. PROVIDE 24"x36" SLAB OPENING FOR R-3067V NEENAH CASTINGS ON ALL CATCH BASIN MANHOLES UNLESS OTHERWISE NOTED.
3. FINAL STRUCTURE OFF-SET TO BE VERIFIED BY CONTRACTOR AND INSPECTOR BASED ON MATERIAL SUPPLIED TO PROJECT. FIELD STAKING SET ACCORDING TO BACK-OF-CURB.
4. ALL DISTURBED AREAS TO BE SEEDED AND MULCHED WITH MNDOT MIXTURE 240 AT 75 POUNDS PER ACRE, AND MULCH SHALL BE MNDOT TYPE 3 @ 2 TONS PER ACRE.

NOTE:
SEE SHEETS 11.40-11.43 FOR OUTLET CONTROL STRUCTURE DETAILS.

NOTE:
SEE SHEETS 11.10 FOR STORM SEWER STRUCTURE SCHEDULE.

BENCH MARK
TOP NUT HYDRANT AT NORTHWEST CORNER OF FOUNDERS PATH AND DAKOTA COURT
EL=896.15 (NAVD88)

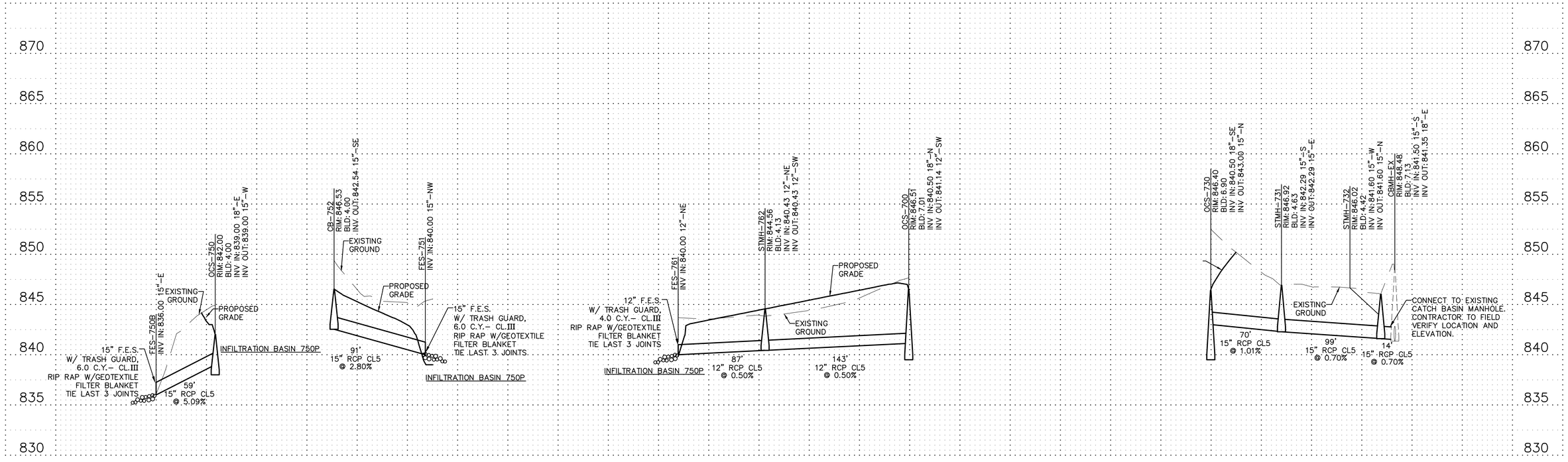

PIONEER engineering
CIVIL ENGINEERS LAND PLANNERS LAND SURVEYORS LANDSCAPE ARCHITECTS
2422 Enterprise Drive
Mendota Heights, MN 55120
(651) 681-1914
Fax: 681-9488
www.pioneereng.com

I hereby certify that this plan was prepared by me or under my direct supervision and that I am a duly Licensed Professional Engineer under the laws of the State of Minnesota
Name: Brian N. Molinaro
Reg. No. 47504 Date 05-03-2022

Revisions

Date 05-03-2022
Designed NAP
Drawn RC
Checked BNM

STORM SEWER CONSTRUCTION

JOHNSON - REILAND
616 HIGHWAY 3
DUNDAS, MINNESOTA 55019

ENSCONCED WOODS
CHASKA, MINNESOTA

01-ENG-120158-SHEET-STRM

11.22 OF 36

6.B. Recommend Approval of the Final
Page 37 of 59
© 2022 Pioneer Engineering, P.A.

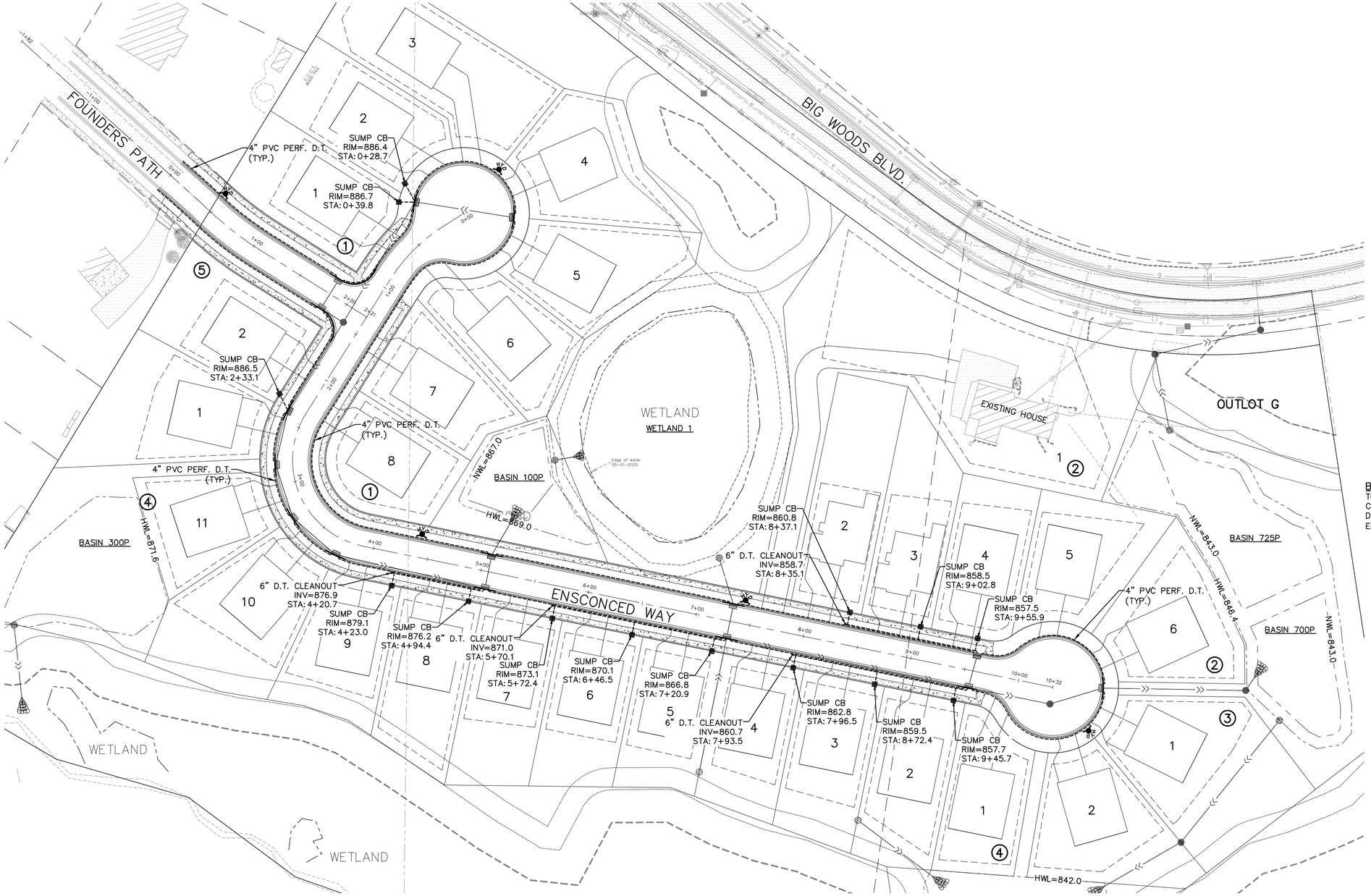

PIONEERengineering

CIVIL ENGINEERS LAND PLANNERS LAND SURVEYORS LANDSCAPE ARCHITECTS

2422 Enterprise Drive
Mendota Heights, MN 55120

(651) 681-1914
Fax: 681-9488
www.pioneereng.com

I hereby certify that this plan was prepared by me or under my direct supervision and that I am a duly Licensed Professional Engineer under the laws of the State of Minnesota

Name: Brian N. Molinaro
Reg. No. 47504 Date 05-03-2022

Revisions

Date 05-03-2022
Designed NAP
Drawn KC
Checked BNM

STREET & SUMP LINE DRAINTILE

JOHNSON - REILAND
616 HIGHWAY 3
DUNDAS, MINNESOTA 55019

ENSCONCED WOODS
CHASKA, MINNESOTA

01-ENG-120158-SHEET-DRAINTILE

11.30 OF 36

© 2022 Pioneer Engineering, P.A.

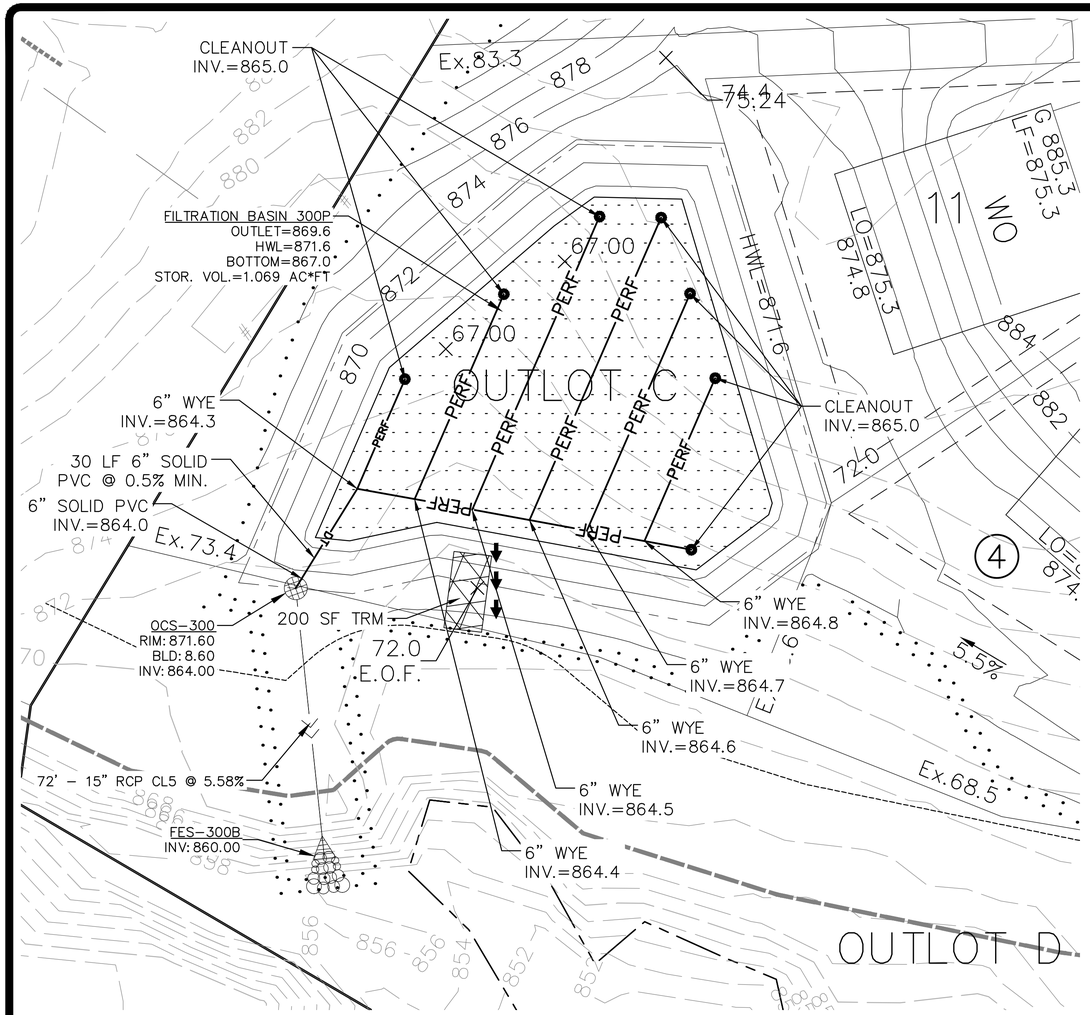

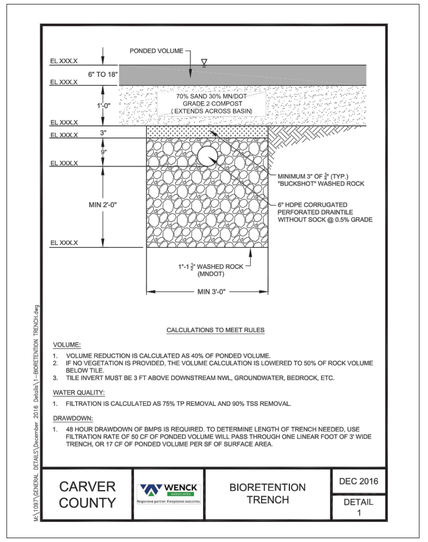

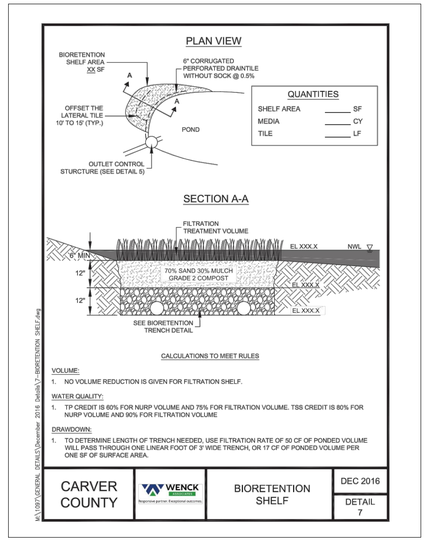

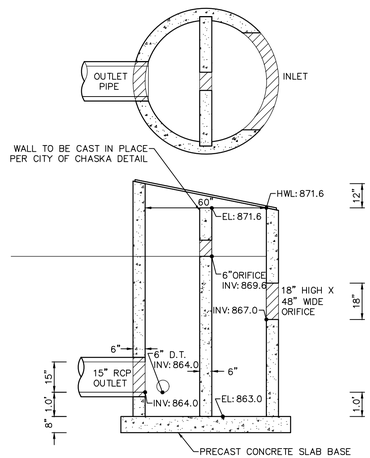

POND OUTLET CONTROL STRUCTURE OCS-300
(NOT TO SCALE)

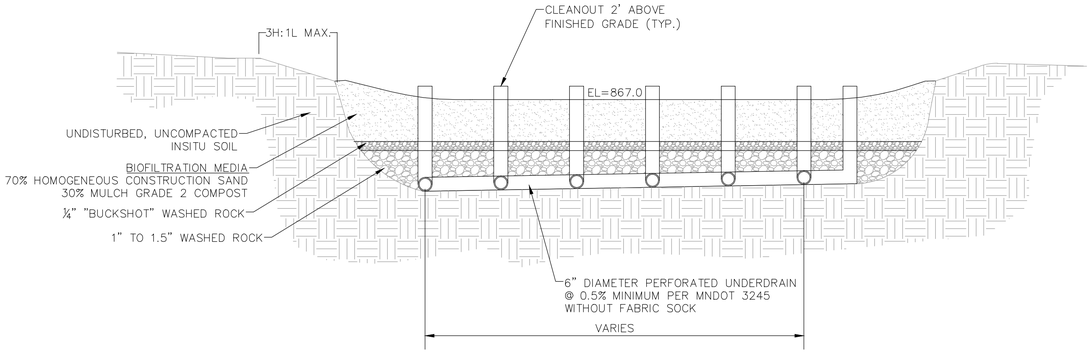

FILTRATION BASIN 300P
CROSS-SECTION
NOT TO SCALE

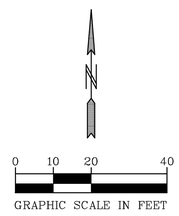

FILTRATION BASIN CONSTRUCTION NOTES

CONSTRUCTION SEQUENCING

1. INSTALL SILT FENCE AND/OR OTHER APPROPRIATE EROSION CONTROL DEVICES TO PREVENT SEDIMENT FROM LEAVING OR ENTERING THE PRACTICE DURING CONSTRUCTION.
2. ALL DOWN-GRADIENT PERIMETER SEDIMENT CONTROL BMPS MUST BE IN PLACE BEFORE ANY UP GRADIENT LAND DISTURBING ACTIVITY BEGINS.
3. PERFORM CONTINUOUS INSPECTIONS OF EROSION CONTROL PRACTICES.
4. INSTALL UTILITIES (WATER, SANITARY SEWER, ELECTRIC, PHONE, FIBER OPTIC, ETC) PRIOR TO SETTING FINAL GRADE OF RETENTION DEVICE.
5. ROUGH GRADE THE SITE. DO NOT USE RETENTION AREA AS TEMPORARY SEDIMENT BASINS.
6. PERFORM ALL OTHER SITE IMPROVEMENTS.
7. SEED AND MULCH ALL AREAS AFTER DISTURBANCE.
8. CONSTRUCT RETENTION DEVICE UPON STABILIZATION OF CONTRIBUTING DRAINAGE AREA.
9. IMPLEMENT TEMPORARY AND PERMANENT EROSION CONTROL PRACTICES.
10. PLANT AND MULCH RETENTION DEVICE.
11. REMOVE TEMPORARY EROSION CONTROL DEVICES AFTER THE CONTRIBUTING DRAINAGE AREA IS ADEQUATELY VEGETATED.
12. LIMIT HEAVY MACHINERY IN THE FILTRATION BASIN. IF OVER-COMPACTED AND WATER DOESN'T FILTER, CONTRACTOR TO SCARIFY AREA TO PROMOTE FILTRATION.

GENERAL NOTES

1. IN THE EVENT THAT SEDIMENT IS INTRODUCED INTO THE BMP DURING OR IMMEDIATELY FOLLOWING EXCAVATION, THIS MATERIAL SHALL BE REMOVED FROM THE PRACTICE PRIOR TO CONTINUING CONSTRUCTION.
2. GRADING OF RETENTION DEVICES SHALL BE ACCOMPLISHED USING LOW-COMPACTION EARTH-MOVING EQUIPMENT TO PREVENT COMPACTION OF UNDERLYING SOILS.
3. ALL SUB MATERIALS BELOW THE SPECIFIED BIORETENTION DEPTH (ELEVATION) SHALL BE UNDISTURBED, UNLESS OTHERWISE NOTED.

PIONEERengineering
CIVIL ENGINEERS LAND PLANNERS LAND SURVEYORS LANDSCAPE ARCHITECTS
2422 Enterprise Drive
Mendota Heights, MN 55120
(651) 681-1914
Fax: 681-9488
www.pioneereng.com

I hereby certify that this plan was prepared by me or under my direct supervision and that I am a duly Licensed Professional Engineer under the laws of the State of Minnesota
Name: Brian N. Molinaro
Reg. No. 47504 Date 05-03-2022

Revisions

Date 05-03-2022
Designed NAP
Drawn BC
Checked

BASIN DETAILS

JOHNSON - REILAND
616 HIGHWAY 3
DUNDAS, MINNESOTA 55019

ENSCONCED WOODS
CHASKA, MINNESOTA

01-ENG-120158-SHEET-BASN

11.40 OF 36

© 2022 Pioneer Engineering, P.A.

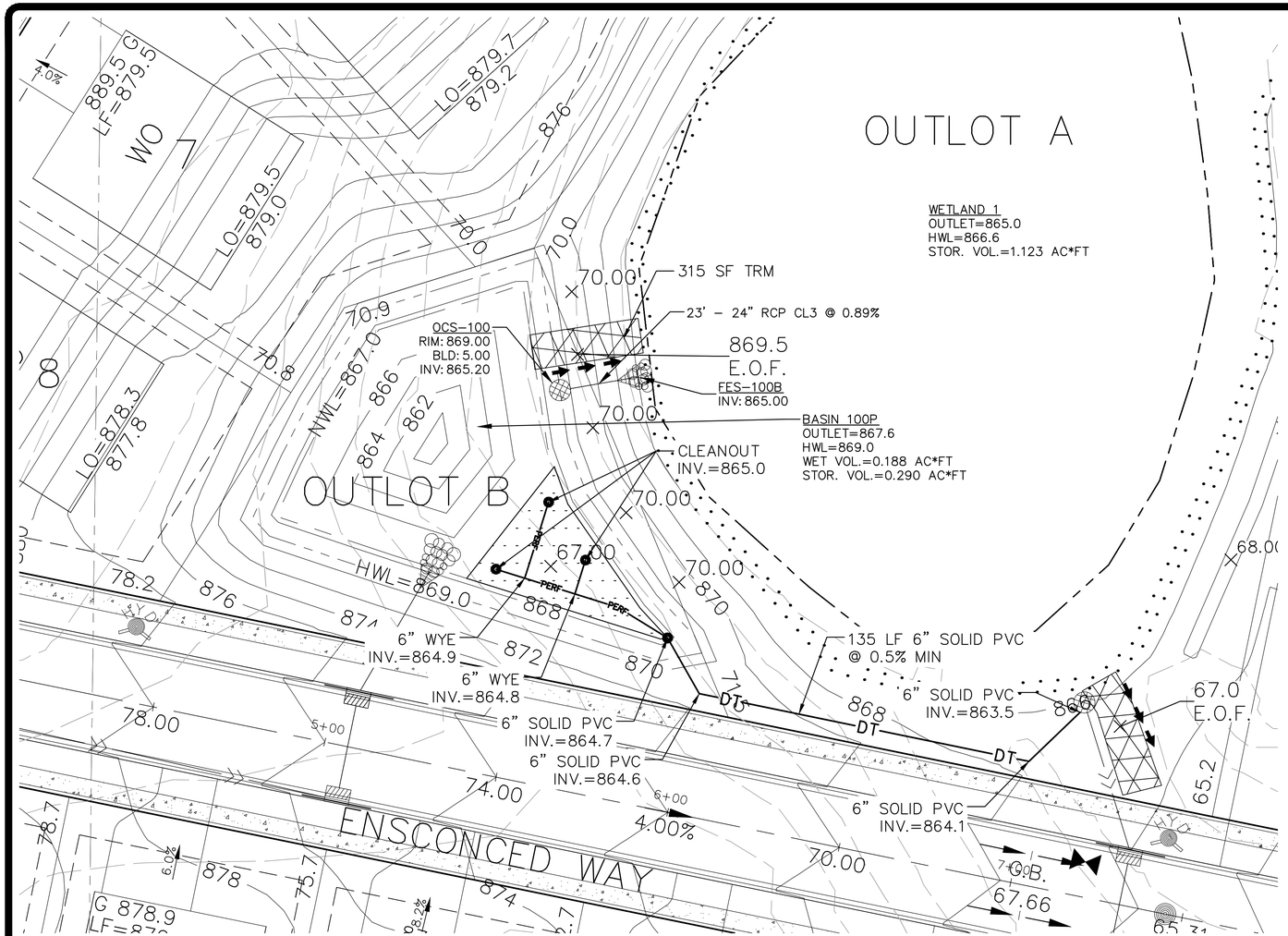

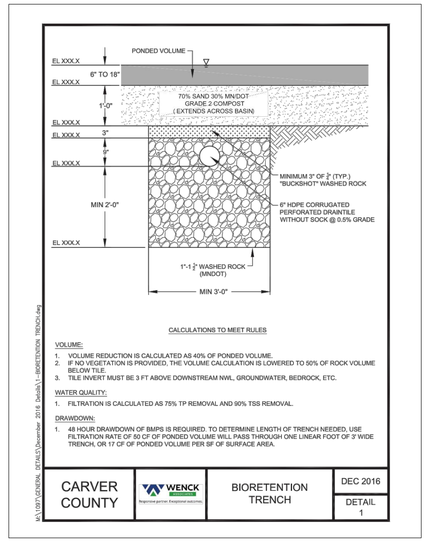

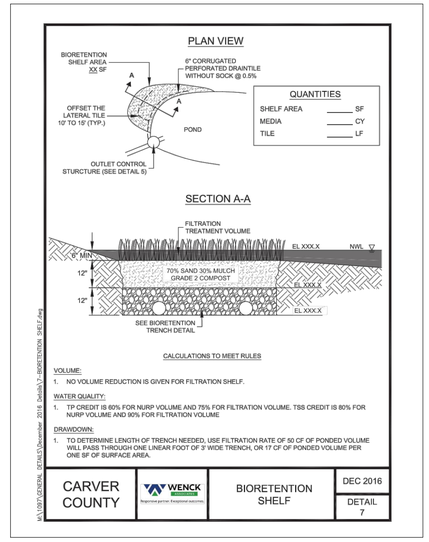

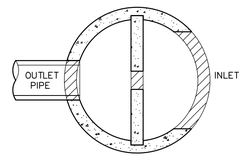

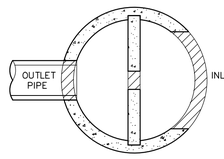

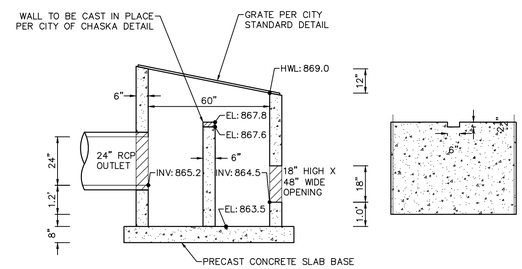

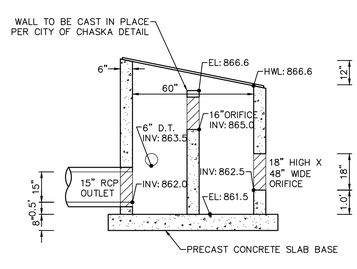

FILTRATION BASIN CONSTRUCTION NOTES

CONSTRUCTION SEQUENCING

1. INSTALL SILT FENCE AND/OR OTHER APPROPRIATE EROSION CONTROL DEVICES TO PREVENT SEDIMENT FROM LEAVING OR ENTERING THE PRACTICE DURING CONSTRUCTION.
2. ALL DOWN-GRADIENT PERIMETER SEDIMENT CONTROL BMPS MUST BE IN PLACE BEFORE ANY UP GRADIENT LAND DISTURBING ACTIVITY BEGINS.
3. PERFORM CONTINUOUS INSPECTIONS OF EROSION CONTROL PRACTICES.
4. INSTALL UTILITIES (WATER, SANITARY SEWER, ELECTRIC, PHONE, FIBER OPTIC, ETC) PRIOR TO SETTING FINAL GRADE OF RETENTION DEVICE.
5. ROUGH GRADE THE SITE. DO NOT USE RETENTION AREA AS TEMPORARY SEDIMENT BASINS.
6. PERFORM ALL OTHER SITE IMPROVEMENTS.
7. SEED AND MULCH ALL AREAS AFTER DISTURBANCE.
8. CONSTRUCT RETENTION DEVICE UPON STABILIZATION OF CONTRIBUTING DRAINAGE AREA.
9. IMPLEMENT TEMPORARY AND PERMANENT EROSION CONTROL PRACTICES.
10. PLANT AND MULCH RETENTION DEVICE.
11. REMOVE TEMPORARY EROSION CONTROL DEVICES AFTER THE CONTRIBUTING DRAINAGE AREA IS ADEQUIATELY VEGETATED.
12. LIMIT HEAVY MACHINERY IN THE FILTRATION BASIN. IF OVER-COMPACTED AND WATER DOESN'T FILTER, CONTRACTOR TO SCARIFY AREA TO PROMOTE FILTRATION.

GENERAL NOTES

1. IN THE EVENT THAT SEDIMENT IS INTRODUCED INTO THE BMP DURING OR IMMEDIATELY FOLLOWING EXCAVATION, THIS MATERIAL SHALL BE REMOVED FROM THE PRACTICE PRIOR TO CONTINUING CONSTRUCTION.
2. GRADING OF RETENTION DEVICES SHALL BE ACCOMPLISHED USING LOW-COMPACTION EARTH-MOVING EQUIPMENT TO PREVENT COMPACTION OF UNDERLYING SOILS.
3. ALL SUB MATERIALS BELOW THE SPECIFIED BIORETENTION DEPTH (ELEVATION) SHALL BE UNDISTURBED, UNLESS OTHERWISE NOTED.

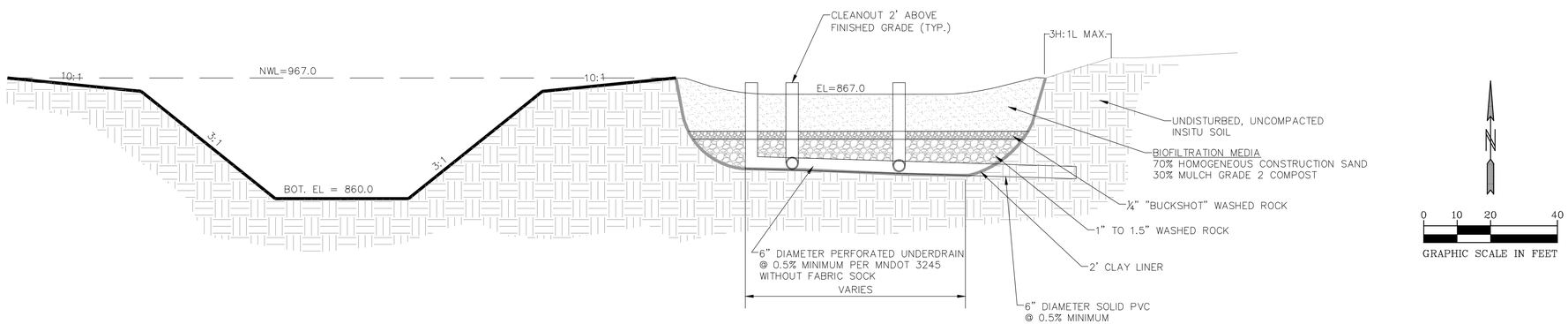

FILTRATION BASIN 100P
CROSS-SECTION
NOT TO SCALE

01-ENG-120158-SHEET-BASN

PIONEER engineering
CIVIL ENGINEERS LAND PLANNERS LAND SURVEYORS LANDSCAPE ARCHITECTS
2422 Enterprise Drive
Mendota Heights, MN 55120
(651) 681-1914
Fax: 681-9488
www.pioneereng.com

I hereby certify that this plan was prepared by me or under my direct supervision and that I am a duly Licensed Professional Engineer under the laws of the State of Minnesota

Name Brian N. Molinaro
Reg. No. 47504 Date 05-03-2022

Revisions

Date 05-03-2022
Designed NAP
Drawn

BASIN DETAILS

JOHNSON - REILAND
616 HIGHWAY 3
DUNDAS, MINNESOTA 55019

ENSCONCED WOODS
CHASKA, MINNESOTA

11.41 OF 36

© 2022 Pioneer Engineering, P.A.

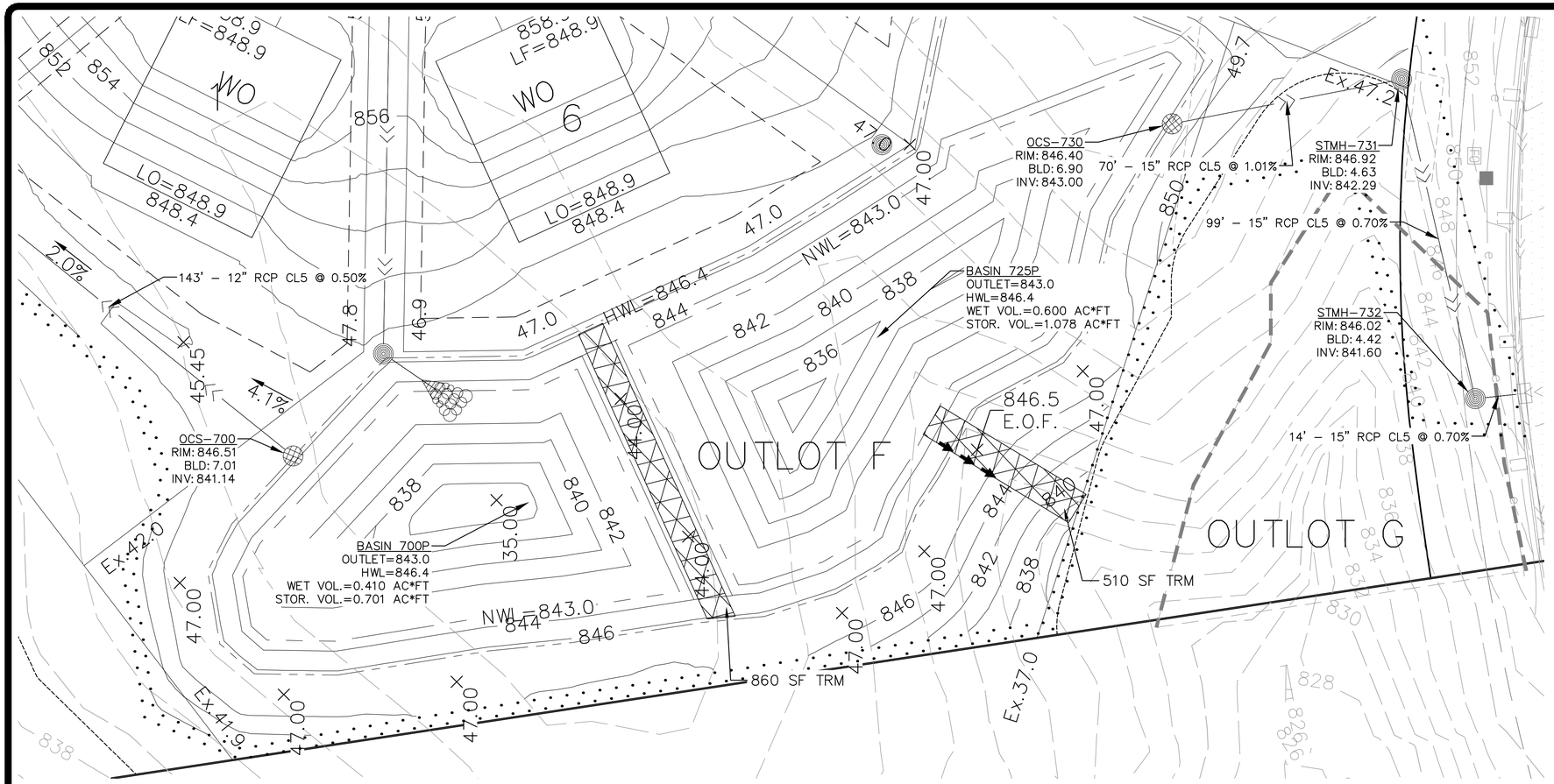

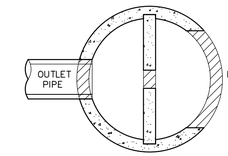

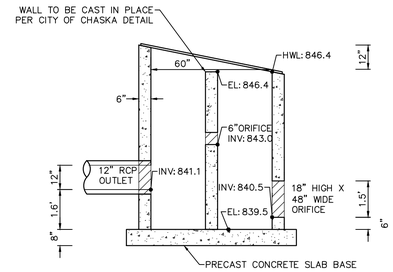

POND OUTLET CONTROL STRUCTURE OCS–700
(NOT TO SCALE)

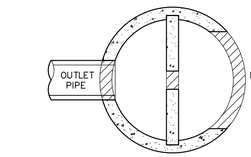

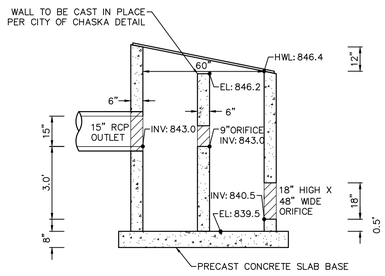

POND OUTLET CONTROL STRUCTURE OCS–730
(NOT TO SCALE)

INFILTRATION BASIN CONSTRUCTION NOTES

CONSTRUCTION SEQUENCING

1. INSTALL SILT FENCE AND/OR OTHER APPROPRIATE EROSION CONTROL DEVICES TO PREVENT SEDIMENT FROM LEAVING OR ENTERING THE PRACTICE DURING CONSTRUCTION.
2. ALL DOWN–GRADIENT PERIMETER SEDIMENT CONTROL BMPS MUST BE IN PLACE BEFORE ANY UP GRADIENT LAND DISTURBING ACTIVITY BEGINS.
3. PERFORM CONTINUOUS INSPECTIONS OF EROSION CONTROL PRACTICES.
4. INSTALL UTILITIES (WATER, SANITARY SEWER, ELECTRIC, PHONE, FIBER OPTIC, ETC) PRIOR TO SETTING FINAL GRADE OF RETENTION DEVICE.
5. ROUGH GRADE THE SITE. DO NOT USE RETENTION AREA AS TEMPORARY SEDIMENT BASINS.
6. PERFORM ALL OTHER SITE IMPROVEMENTS.
7. SEED AND MULCH ALL AREAS AFTER DISTURBANCE.
8. CONSTRUCT RETENTION DEVICE UPON STABILIZATION OF CONTRIBUTING DRAINAGE AREA.
9. IMPLEMENT TEMPORARY AND PERMANENT EROSION CONTROL PRACTICES.
10. PLANT AND MULCH RETENTION DEVICE.
11. REMOVE TEMPORARY EROSION CONTROL DEVICES AFTER THE CONTRIBUTING DRAINAGE AREA IS ADEQUATELY VEGETATED.

GENERAL NOTES

1. IN THE EVENT THAT SEDIMENT IS INTRODUCED INTO THE BMP DURING OR IMMEDIATELY FOLLOWING EXCAVATION, THIS MATERIAL SHALL BE REMOVED FROM THE PRACTICE PRIOR TO CONTINUING CONSTRUCTION.
2. GRADING OF RETENTION DEVICES SHALL BE ACCOMPLISHED USING LOW–COMPACTION EARTH–MOVING EQUIPMENT TO PREVENT COMPACTION OF UNDERLYING SOILS.
3. ALL SUB MATERIALS BELOW THE SPECIFIED BIORETENTION DEPTH (ELEVATION) SHALL BE UNDISTURBED, UNLESS OTHERWISE NOTED.
4. POST CONSTRUCTION TEST ON INFILTRATION BASIN SHALL BE REQUIRED. BASIN SHALL BE FILLED WITH WATER TO A MINIMUM DEPTH OF SIX INCHES (6") AND THE TIME TO DRAIN MUST BE DOCUMENTED. THE CITY OF CHASKA MUST BE NOTIFIED PRIOR TO TESTING TO OBSERVE THE RESULTS.

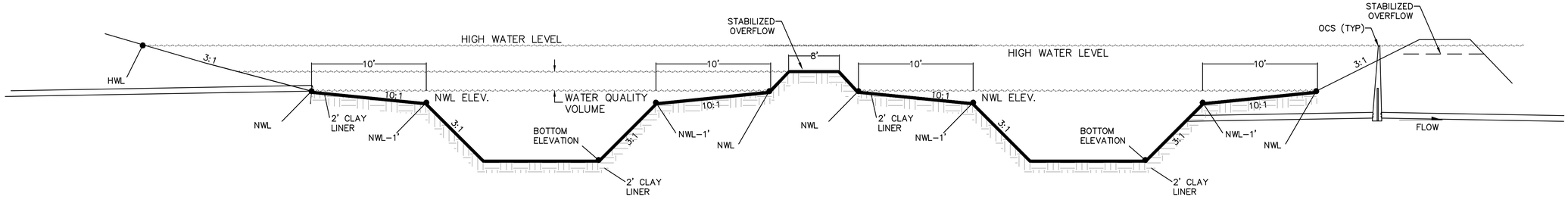

BASIN 700P DETAIL
N.T.S.

BASIN 725P DETAIL
N.T.S.

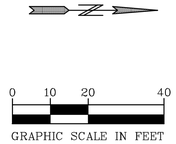

PIONEER engineering
CIVIL ENGINEERS LAND PLANNERS LAND SURVEYORS LANDSCAPE ARCHITECTS
2422 Enterprise Drive
Mendota Heights, MN 55120
(651) 681-1914
Fax: 681-9488
www.pioneereng.com

I hereby certify that this plan was prepared by me or under my direct supervision and that I am a duly Licensed Professional Engineer under the laws of the State of Minnesota
Name Brian N. Molinaro
Reg. No. 47504 Date 05-03-2022

Revisions

Date 05-03-2022
Designed NAP
Drawn RC
Checked BNM

BASIN DETAILS

JOHNSON - REILAND
616 HIGHWAY 3
DUNDAS, MINNESOTA 55019

ENSCONCED WOODS
CHASKA, MINNESOTA

01-ENG-120158-SHEET-BASN

11.42 OF 36

© 2022 Pioneer Engineering, P.A.

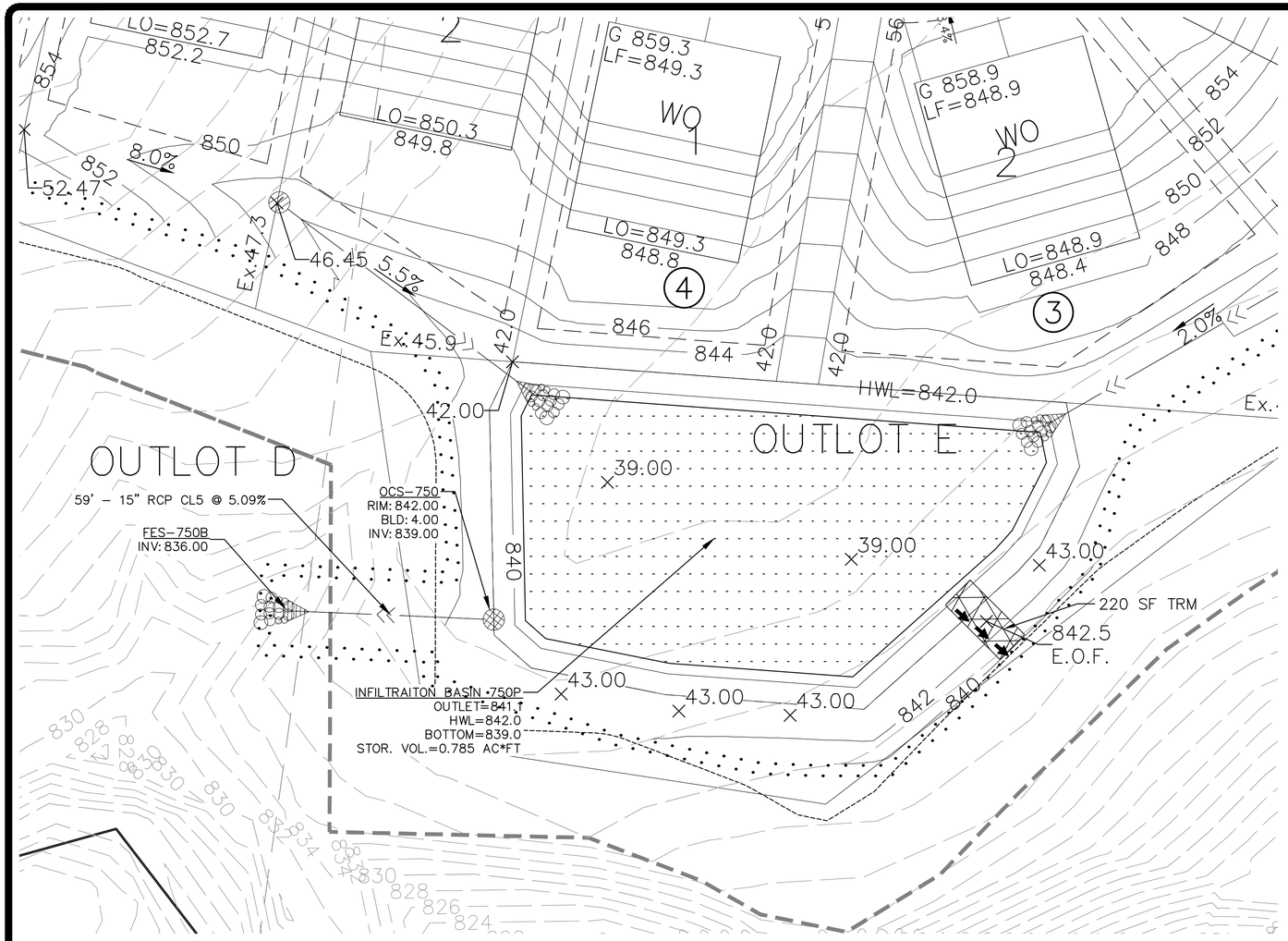

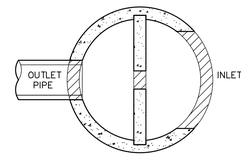

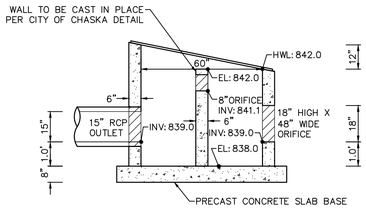

POND OUTLET CONTROL STRUCTURE OCS-750
(NOT TO SCALE)

INFILTRATION BASIN CONSTRUCTION NOTES

CONSTRUCTION SEQUENCING

1. INSTALL SILT FENCE AND/OR OTHER APPROPRIATE EROSION CONTROL DEVICES TO PREVENT SEDIMENT FROM LEAVING OR ENTERING THE PRACTICE DURING CONSTRUCTION.
2. ALL DOWN-GRADIENT PERIMETER SEDIMENT CONTROL BMPS MUST BE IN PLACE BEFORE ANY UP GRADIENT LAND DISTURBING ACTIVITY BEGINS.
3. PERFORM CONTINUOUS INSPECTIONS OF EROSION CONTROL PRACTICES.
4. INSTALL UTILITIES (WATER, SANITARY SEWER, ELECTRIC, PHONE, FIBER OPTIC, ETC) PRIOR TO SETTING FINAL GRADE OF RETENTION DEVICE.
5. ROUGH GRADE THE SITE. DO NOT USE RETENTION AREA AS TEMPORARY SEDIMENT BASINS.
6. PERFORM ALL OTHER SITE IMPROVEMENTS.
7. SEED AND MULCH ALL AREAS AFTER DISTURBANCE.
8. CONSTRUCT RETENTION DEVICE UPON STABILIZATION OF CONTRIBUTING DRAINAGE AREA.
9. IMPLEMENT TEMPORARY AND PERMANENT EROSION CONTROL PRACTICES.
10. PLANT AND MULCH RETENTION DEVICE.
11. REMOVE TEMPORARY EROSION CONTROL DEVICES AFTER THE CONTRIBUTING DRAINAGE AREA IS ADEQUATELY VEGETATED.

GENERAL NOTES

1. IN THE EVENT THAT SEDIMENT IS INTRODUCED INTO THE BMP DURING OR IMMEDIATELY FOLLOWING EXCAVATION, THIS MATERIAL SHALL BE REMOVED FROM THE PRACTICE PRIOR TO CONTINUING CONSTRUCTION.
2. GRADING OF RETENTION DEVICES SHALL BE ACCOMPLISHED USING LOW-COMPACTION EARTH-MOVING EQUIPMENT TO PREVENT COMPACTION OF UNDERLYING SOILS.
3. ALL SUB MATERIALS BELOW THE SPECIFIED BIORETENTION DEPTH (ELEVATION) SHALL BE UNDISTURBED, UNLESS OTHERWISE NOTED.
4. POST CONSTRUCTION TEST ON INFILTRATION BASIN SHALL BE REQUIRED. BASIN SHALL BE FILLED WITH WATER TO A MINIMUM DEPTH OF SIX INCHES (6") AND THE TIME TO DRAIN MUST BE DOCUMENTED. THE CITY OF CHASKA MUST BE NOTIFIED PRIOR TO TESTING TO OBSERVE THE RESULTS.

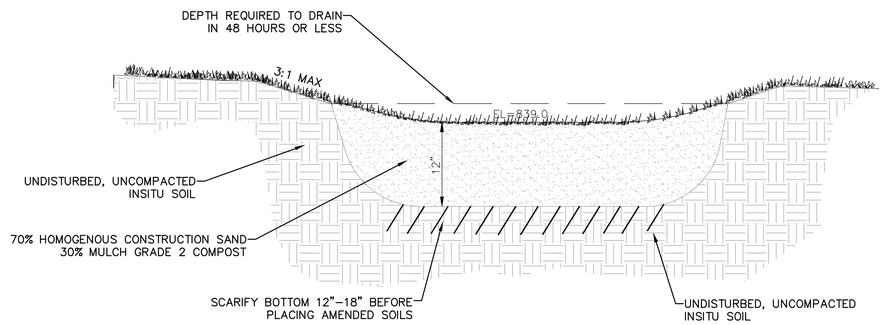

INFILTRATION BASIN 750 CROSS SECTION

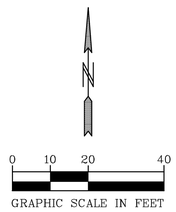

PIONEER engineering
CIVIL ENGINEERS LAND PLANNERS LAND SURVEYORS LANDSCAPE ARCHITECTS
2422 Enterprise Drive
Mendota Heights, MN 55120
(651) 681-1914
Fax: 681-9488
www.pioneereng.com

I hereby certify that this plan was prepared by me or under my direct supervision and that I am a duly Licensed Professional Engineer under the laws of the State of Minnesota
Name Brian N. Molinaro
Reg. No. 47504 Date 05-03-2022

Revisions

Date 05-03-2022
Designed NAP
Drawn BZ
Checked

BASIN DETAILS

JOHNSON - REILAND
616 HIGHWAY 3
DUNDAS, MINNESOTA 55019

ENSCONCED WOODS
CHASKA, MINNESOTA

01-ENG-120158-SHEET-BASN

11.43 OF 36

© 2022 Pioneer Engineering, P.A.

SIGN LEGEND

1 STOP R1-1

2 STREET SIGNS "FOUNDERS PATH" "ENSCONCED WAY"

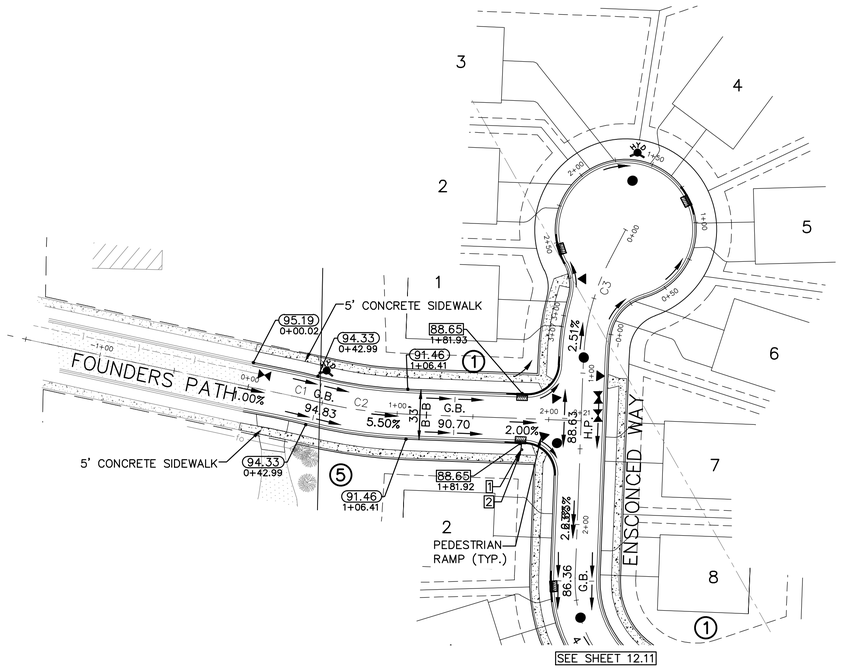

CURB LEGEND

(08.15) = GUTTER ELEVATION FOR SURMOUNTABLE CURB
GUTTER ELEVATION= ℄ – 0.61'

[08.32] = GUTTER ELEVATION FOR B618 CURB
GUTTER ELEVATION= ℄ – 0.61'

07.82 = BITUMINOUS ELEVATION

= SURMOUNTABLE CURB & GUTTER (CITY PLATE STR–1)

= B618 CURB & GUTTER (CITY PLATE STR–1)

= BITUMINOUS EDGE

▶ = PED. RAMP (CITY PLATE STR–11)

NOTE:
SEE SHEET 12.10 FOR INTERSECTION DETAILS.

CURVE TABLE						
CURVE	DELTA	LENGTH	RADIUS	TANGENT	PC	PT
C1	2°14'48"	9.80	250.00	4.90	0+33.19	0+42.99
C2	12°06'41"	63.42	300.00	31.83	0+42.99	1+06.41

0 25 50 100
GRAPHIC SCALE IN FEET

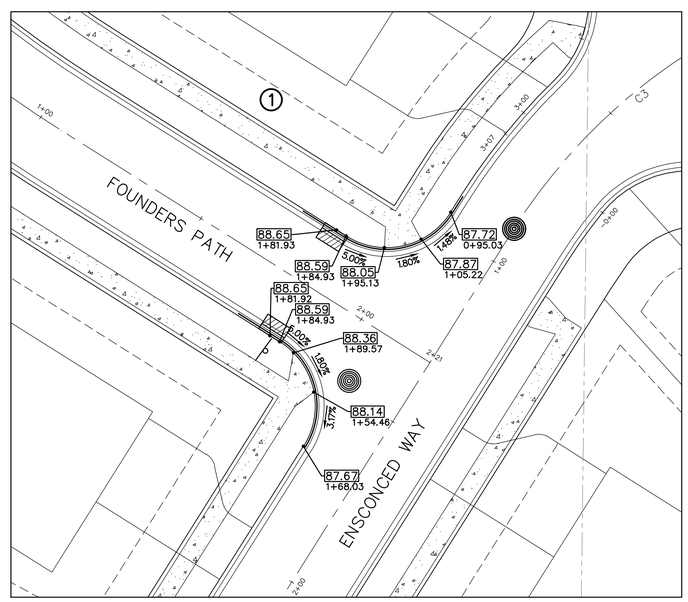

INTERSECTION DETAIL

0 10 20 40
GRAPHIC SCALE IN FEET

BENCH MARK

TOP NUT HYDRANT AT NORTHWEST CORNER OF FOUNDERS PATH AND DAKOTA COURT
EL=896.15 (NAVD88)

FOUNDERS PATH

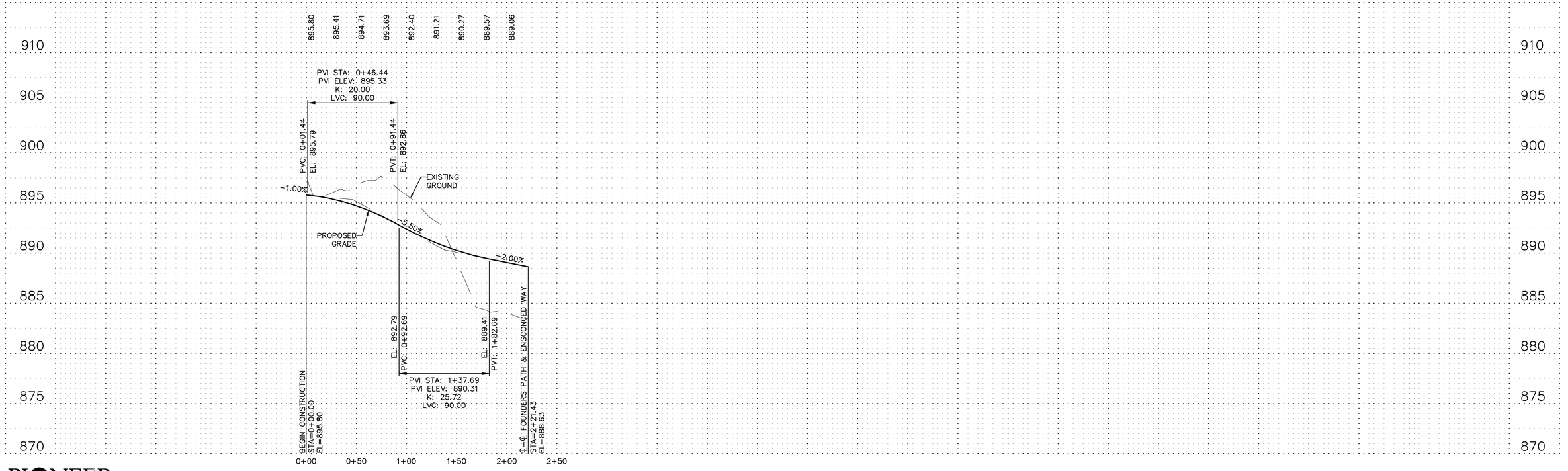

PIONEER engineering
CIVIL ENGINEERS LAND PLANNERS LAND SURVEYORS LANDSCAPE ARCHITECTS
2422 Enterprise Drive
Mendota Heights, MN 55120
(651) 681-1914
Fax: 681-9488
www.pioneereng.com

I hereby certify that this plan was prepared by me or under my direct supervision and that I am a duly Licensed Professional Engineer under the laws of the State of Minnesota
Name Brian N. Molinaro
Reg. No. 47504 Date 05-03-2022

Revisions

Date	05-03-2022
Designed	NAP
Drawn	RG

STREET CONSTRUCTION

JOHNSON - REILAND
616 HIGHWAY 3
DUNDAS, MINNESOTA 55019

ENSCONCED WOODS
CHASKA, MINNESOTA

12.10 OF 36

01-ENG-120158-SHEET-ROAD

© 2022 Pioneer Engineering, P.A.

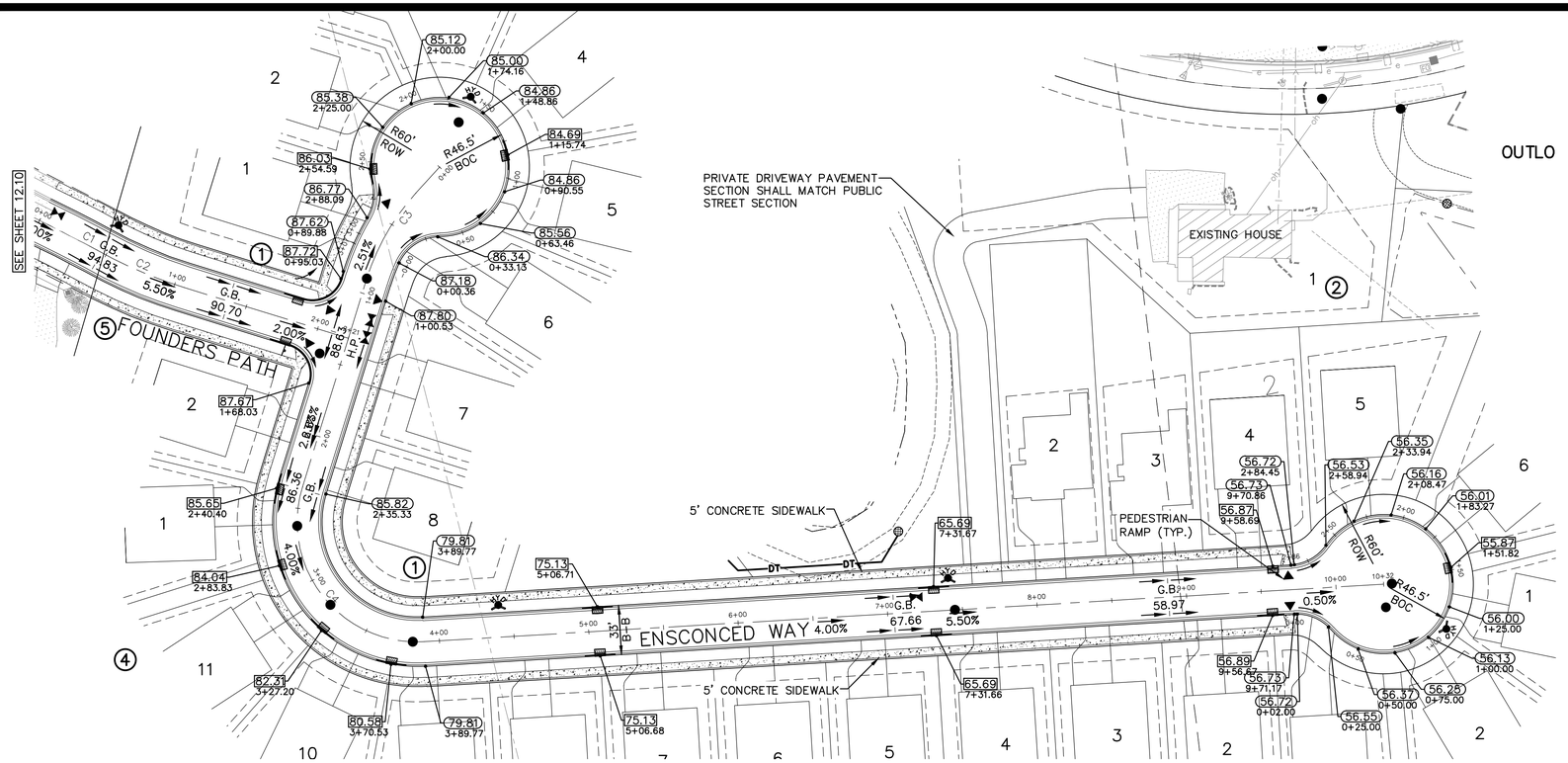

CURB LEGEND

- (08.15) = GUTTER ELEVATION FOR SURMOUNTABLE CURB GUTTER ELEVATION= ℄ – 0.61'
- 08.32 = GUTTER ELEVATION FOR B618 CURB GUTTER ELEVATION= ℄ – 0.61'
- 07.82 = BITUMINOUS ELEVATION
- = SURMOUNTABLE CURB & GUTTER (CITY PLATE STR–1)
- = B618 CURB & GUTTER (CITY PLATE STR–1)
- = BITUMINOUS EDGE
- ▶ = PED. RAMP (CITY PLATE STR–11)

NOTE:
SEE SHEET 12.10 FOR INTERSECTION DETAILS.

1 STOP RT–1

2 STREET SIGNS
"FOUNDERS PATH"
"ENSCONCED WAY"

CURVE TABLE						
CURVE	DELTA	LENGTH	RADIUS	TANGENT	PC	PT
C3	25°17'07"	66.20	150.00	33.65	0+23.68	0+89.88
C4	110°36'26"	154.44	80.00	115.55	2+35.33	3+89.77

0 25 50 100
GRAPHIC SCALE IN FEET

BENCH MARK
TOP NUT HYDRANT AT NORTHWEST CORNER OF FOUNDERS PATH AND DAKOTA COURT
EL=896.15 (NAVD88)

ENSCONCE WAY

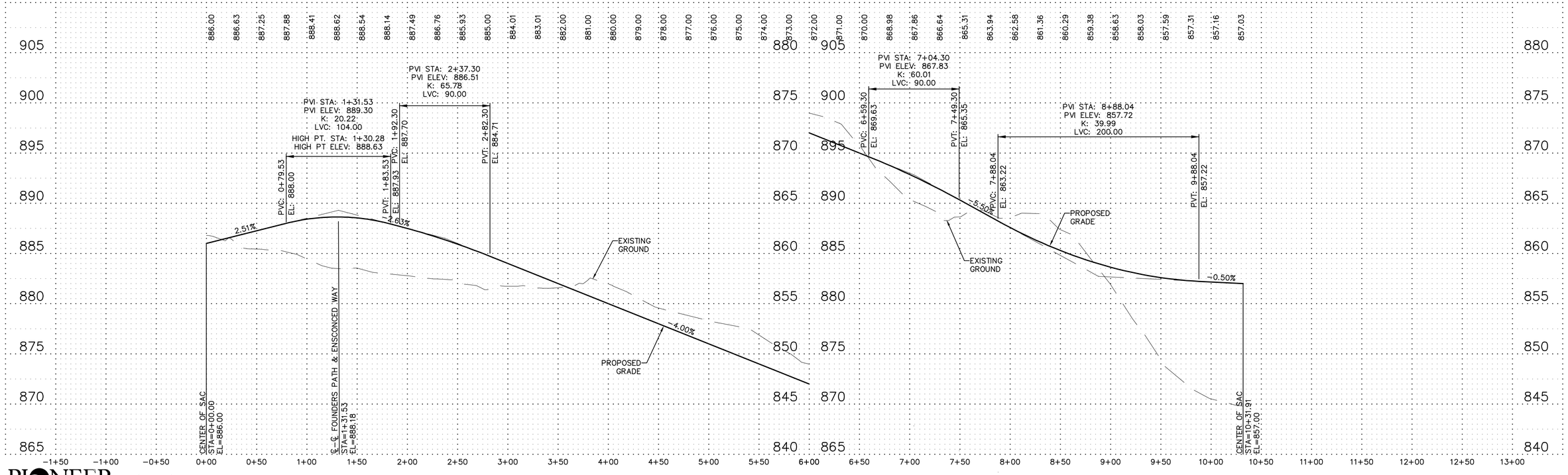

PIONEER engineering
CIVIL ENGINEERS LAND PLANNERS LAND SURVEYORS LANDSCAPE ARCHITECTS

2422 Enterprise Drive
Mendota Heights, MN 55120
(651) 681-1914
Fax: 681-9488
www.pioneereng.com

I hereby certify that this plan was prepared by me or under my direct supervision and that I am a duly Licensed Professional Engineer under the laws of the State of Minnesota
Name Brian N. Molinaro
Reg. No. 47504 Date 05-03-2022

Revisions

Date	05-03-2022
Designed	NAP
Drawn	PC
Checked	BNM

STREET CONSTRUCTION

JOHNSON - REILAND
616 HIGHWAY 3
DUNDAS, MINNESOTA 55019

ENSCONCED WOODS
CHASKA, MINNESOTA

01-ENG-120158-SHEET-ROAD

12.11 OF 36

© 2022 Pioneer Engineering, P.A.

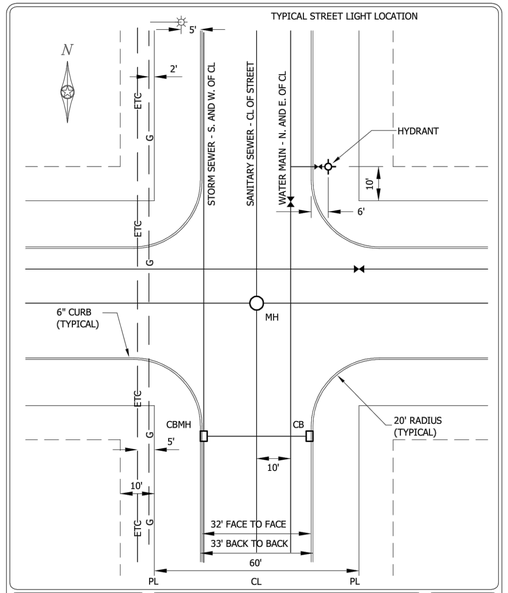

Stantec
2335 Highway 36 W
St. Paul, MN 55113
www.stantec.com

TYPICAL UTILITY LOCATIONS (PUBLIC AND PRIVATE)

CHASKA, MINNESOTA

LAST REVISION: MARCH 2016

PLATE NO. GEN-5

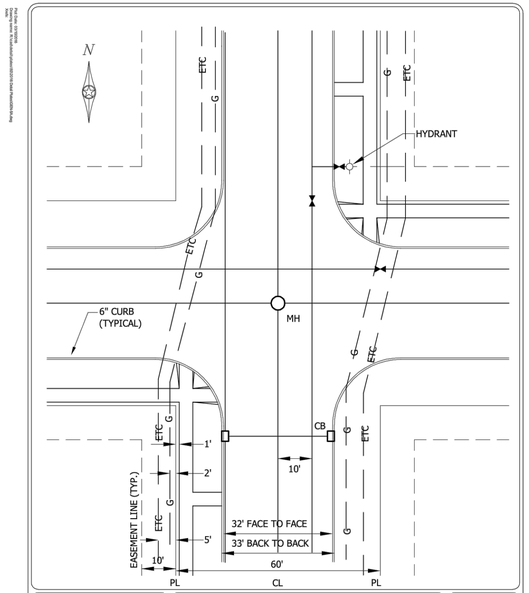

Stantec
2335 Highway 36 W
St. Paul, MN 55113
www.stantec.com

TYPICAL SMALL UTILITY CORRIDORS WITH AND WITHOUT SIDEWALK

CHASKA, MINNESOTA

LAST REVISION: MARCH 2016

PLATE NO. GEN-5A

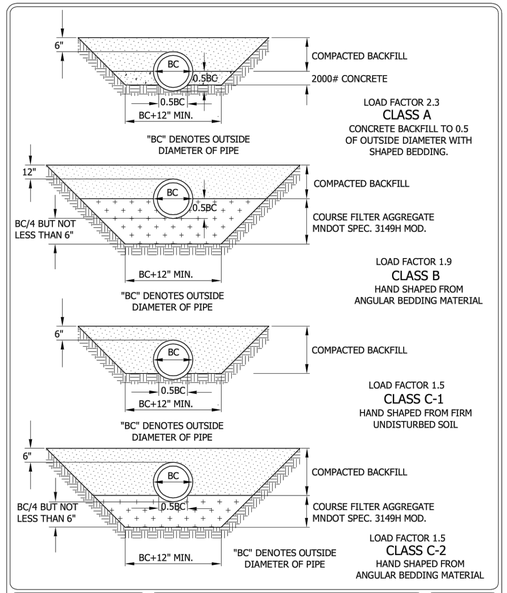

Stantec
2335 Highway 36 W
St. Paul, MN 55113
www.stantec.com

BEDDING METHODS FOR RCP OR DIP

CHASKA, MINNESOTA

LAST REVISION: MARCH 2001

PLATE NO. GEN-6

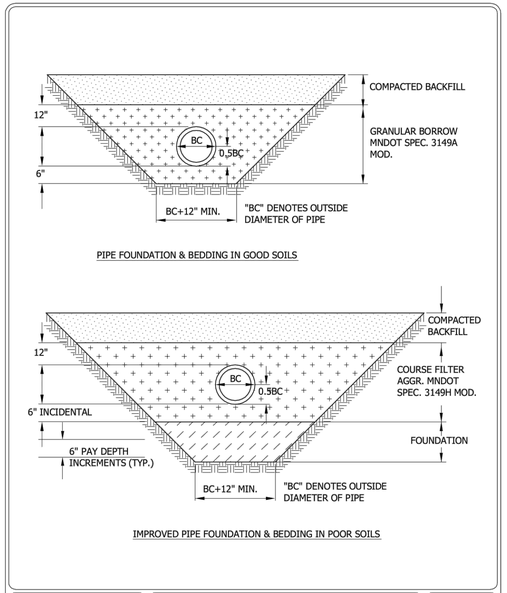

Stantec
2335 Highway 36 W
St. Paul, MN 55113
www.stantec.com

BEDDING METHODS FOR PVC

CHASKA, MINNESOTA

LAST REVISION: MARCH 2008

PLATE NO. GEN-7

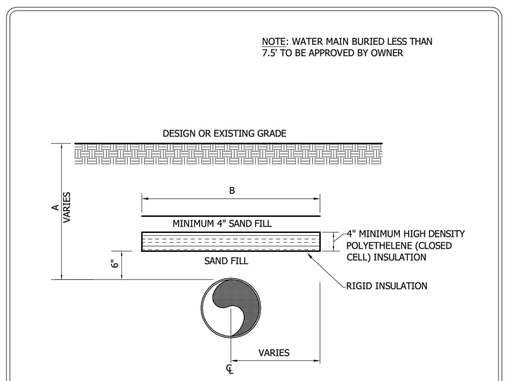

NOTE: PIPE SHALL BE CENTERED UNDER INSULATION UNLESS OTHERWISE SPECIFIED. STAGGER/ OFFSET JOINTS 2' MINIMUM BETWEEN SHEET LAYERS.

COVER OVER PIPE - A	WIDTH OF INSULATING BOARD - B
2'	11'
3'	9'
4'	7'
5'	5'
6'	3'

Stantec
2335 Highway 36 W
St. Paul, MN 55113
www.stantec.com

INSULATION DETAIL

CHASKA, MINNESOTA

LAST REVISION: APRIL 2016

PLATE NO. GEN-8

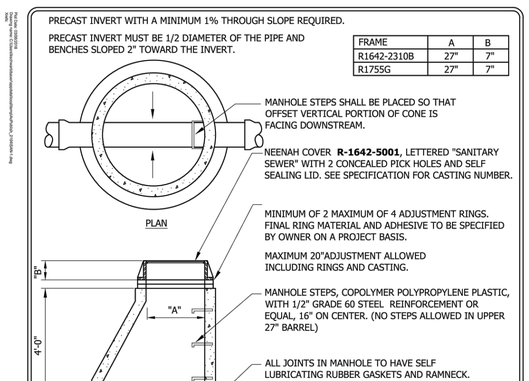

FRAME	A	B
R1642-2310B	27"	7"
R1755G	27"	7"

Stantec
2335 Highway 36 W
St. Paul, MN 55113
www.stantec.com

SANITARY SEWER MANHOLE

CHASKA, MINNESOTA

LAST REVISION: MARCH 2018

PLATE NO. SAN-1

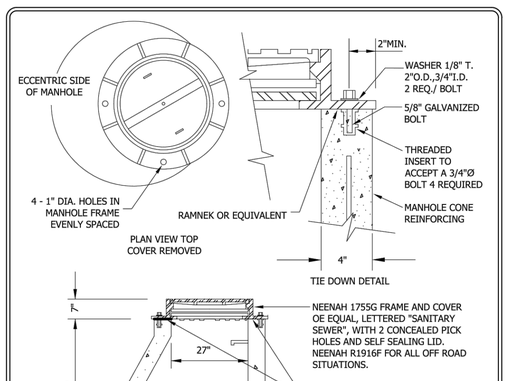

Stantec
2335 Highway 36 W
St. Paul, MN 55113
www.stantec.com

WATERTIGHT CASTING FOR SANITARY SEWER MANHOLE

CHASKA, MINNESOTA

LAST REVISION: MARCH 2018

PLATE NO. SAN-5

PIONEERengineering
CIVIL ENGINEERS LAND PLANNERS LAND SURVEYORS LANDSCAPE ARCHITECTS

2422 Enterprise Drive
Mendota Heights, MN 55120
(651) 681-1914
Fax: 681-9488
www.pioneereng.com

I hereby certify that this plan was prepared by me or under my direct supervision and that I am a duly Licensed Professional Engineer under the laws of the State of Minnesota

Name: Brian N. Molinaro
Reg. No. 47504 Date 05-03-2022

Revisions

Date 05-03-2022
Designed NAP
Drawn RZ
Checked BNM

CITY DETAILS

JOHNSON - REILAND
616 HIGHWAY 3
DUNDAS, MINNESOTA 55019

ENSCONCED WOODS
CHASKA, MINNESOTA

01-ENG-120158-SHEET-DTLS

13.10 OF 36

© 2022 Pioneer Engineering, P.A.

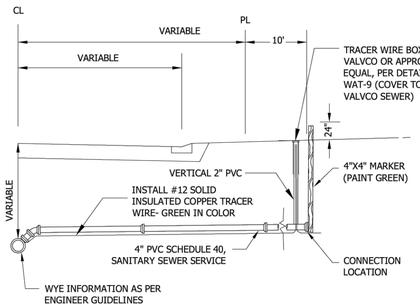

NOTES:
1. SEWER SERVICES, 4" SCHEDULE 40 PVC SEWER PIPE
2. SLOPE - 1/4" PER FOOT MINIMUM.
3. PIPE JOINTS SHALL BE NON GASKETED, SOLVENT WELD TYPE.
4. ALL PIPE SHALL BE BEDDED IN GRANULAR BORROW 3149.2B1 EXCEPT THE LAST TEN FEET WHERE COARSE FILTER AGGREGATE (3149.2H) AGGREGATE WILL BE REQUIRED.
5. BENDS OF 45° OR LESS SHALL BE USED WITHIN THE LAST 5' OF THE SERVICE IF THE DEPTH OF THE SERVICE WOULD EXCEED 10'.
6. NO SERVICE RISERS LESS THAN 3 FEET SHALL BE PERMITTED.
7. A SEPARATE TRACER WIRE WILL EXTEND FROM THE FINISH GRADE AT TRACER WIRE BOX AND FOLLOW SEWER SERVICE TO STRUCTURE FOUNDATION. TRACER WIRE FROM BOX TO FOUNDATION BY OTHERS.
8. FOR DEPTHS GREATER THAN 22', SERVICE PIPE SHALL BE C900 FROM MAIN TO CONNECTION, WITH TRANSITION FITTING FROM C900 TO SCH 40 INSTALLED AT CONNECTION LOCATION.

Stantec
2335 Highway 36 W
St. Paul, MN 55113
www.stantec.com

SEWER SERVICE CONNECTION

CHASKA, MINNESOTA

LAST REVISION: APRIL 2016

PLATE NO. SER-1

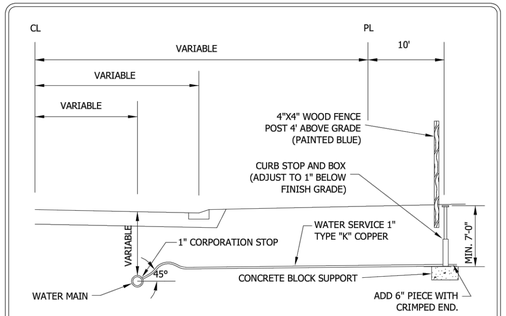

PVC WATER MAIN
STAINLESS STEEL SERVICE SADDLE
SMITH-BLAIR 372 OR APPROVED EQUAL

NOTE: FOR SERVICES LARGER THAN 1" A TAPPING SLEEVE IS REQUIRED. ROCKWELL TYPE 230, FULL CIRCLE, WITH TAP THREADED FOR APPROPRIATE SIZE COPPER CORPORATION STOP. (OR EQUAL)

CORPORATION STOP	CURB STOP	CURB BOX
MUELLER B-25000-N	MUELLER B-25154-N	MUELLER H-10300-N OR H-10302-N
FORD FB-600-4-NL OR-6-NL	FORD B22-444M-NL OR-666M-NL	FORD EM2-75-56R-NL OR EM2-75-57R-NL
A.Y. MCDONALD 74701-B	A.Y. MCDONALD 76104	A.Y. MCDONALD 75615 OR 75614

NOTES:
1. CURB BOX SHALL HAVE A STATIONARY ROD
2. CURB BOX SHALL EXTEND FROM 78" TO 90".
3. ALL PIPE SHALL BE BEDDED IN GRANULAR BORROW 3149.2B1 EXCEPT THE LAST TEN FEET WHERE COARSE FILTER AGGREGATE (3149.2H) WILL BE REQUIRED.
4. IF CURB STOP IS IN DRIVEWAY, CONTRACTOR MUST INSTALL A FORD A-1 CASTING, MARKED WITH "WATER" ON LID.
5. CURB BOX LID SHALL BE MUELLER #89375 OR EQUAL.
6. ALL BRASS FITTINGS SHALL BE "NO LEAD BRASS"

Stantec
2335 Highway 36 W
St. Paul, MN 55113
www.stantec.com

WATER SERVICE CONNECTION
COPPER PIPE
CHASKA, MINNESOTA

LAST REVISION: MARCH 2016

PLATE NO. SER-2

PVC PIPE
BED AND ENCASE IN SELECT GRANULAR, TYPICAL PVC APPLICATION.

SERVICE RISERS FOR SEWER MAINS LESS THAN 22' SHALL BE SCHEDULE 40 PVC (SOLVENT WELD JOINTS). FOR DEPTHS GREATER THAN 22', SERVICE PIPE SHALL BE C900 FROM MAIN TO CONNECTION WITH TRANSITION FITTING FROM C900 TO SCH 40 INSTALLED AT CONNECTION LOCATION.

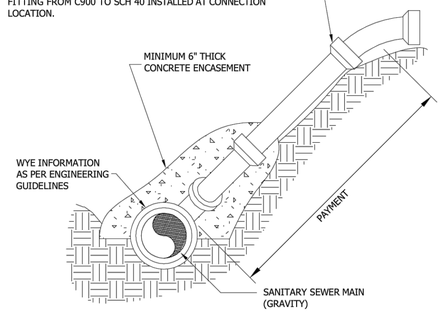

Stantec
2335 Highway 36 W
St. Paul, MN 55113
www.stantec.com

SERVICE RISER

CHASKA, MINNESOTA

LAST REVISION: MARCH 2016

PLATE NO. SER-3

NOTE:
CLEANOUT CAP SHALL BE THREADED MALLEABLE IRON (GALVANIZED)

NOTE:
ENCLOSE LONG SWEEP BEND OR COMBINATION WYE IN CONCRETE AS SHOWN.

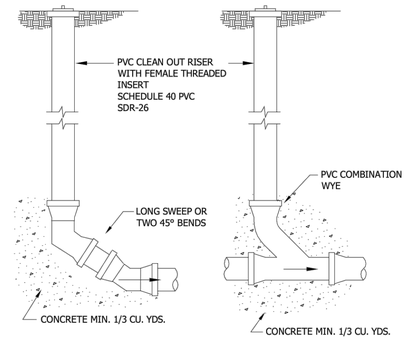

END OF LINE CLEANOUT

IN LINE CLEANOUT

NOTE:
CLEANOUT IS REQUIRED FOR EVERY 100 FEET OF SERVICE LENGTH.

NOTE:
1. IF CLEAN OUT IS IN DRIVEWAY, CONTRACTOR MUST INSTALL FORD A-1 CASTING, MARKED WITH "SEWER" ON LID.
2. IF VALVE BOX IS IN ROADWAY, CONTRACTOR MUST INSTALL TOP SECTION OF A VALVE BOX WITH LID MARKED "SEWER".

Stantec
2335 Highway 36 W
St. Paul, MN 55113
www.stantec.com

SERVICE LINE CLEANOUTS

CHASKA, MINNESOTA

LAST REVISION: MARCH 2001

PLATE NO. SER-4

PIONEER engineering
CIVIL ENGINEERS LAND PLANNERS LAND SURVEYORS LANDSCAPE ARCHITECTS

2422 Enterprise Drive
Mendota Heights, MN 55120
(651) 681-1914
Fax: 681-9488
www.pioneereng.com

I hereby certify that this plan was prepared by me or under my direct supervision and that I am a duly Licensed Professional Engineer under the laws of the State of Minnesota
Name Brian N. Molinaro
Reg. No. 47504 Date 05-03-2022

Revisions

Date 05-03-2022
Designed NAP
Drawn RK
Checked BNM

CITY DETAILS

JOHNSON - REILAND
616 HIGHWAY 3
DUNDAS, MINNESOTA 55019

ENSCONCED WOODS
CHASKA, MINNESOTA

01-ENG-120158-SHEET-DTLS

13.11 OF 36

© 2022 Pioneer Engineering, P.A.

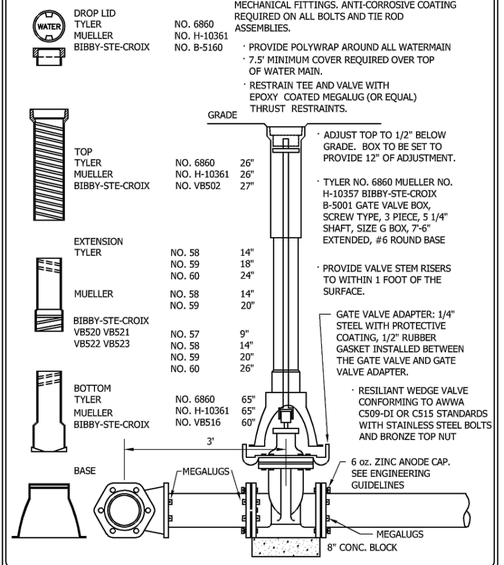

Stantec
733 Marquette Ave Suite 1000
Minneapolis, MN 55402
www.stantec.com

GATE VALVE AND BOX INSTALLATION

CHASKA, MINNESOTA

LAST REVISION: MARCH 2019

PLATE NO. WAT-1

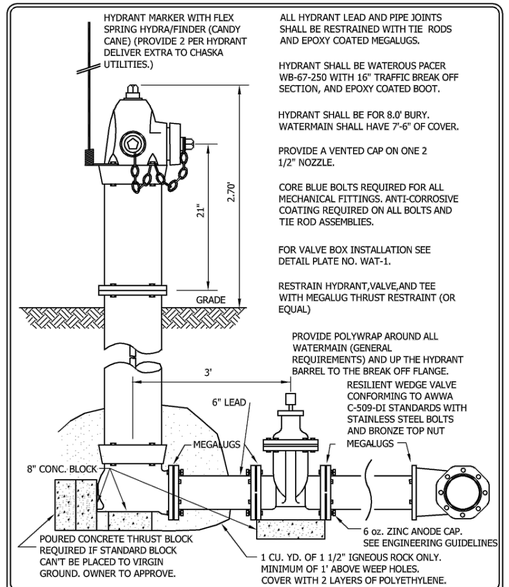

Stantec
733 Marquette Ave Suite 1000
Minneapolis, MN 55402
www.stantec.com

WATEROUS PACER HYDRANT AND VALVE INSTALLATION

CHASKA, MINNESOTA

LAST REVISION: MARCH 2019

PLATE NO. WAT-2

NOTES:
1. SHAPE OF BACK OF BUTTRESS MAY VARY AS LONG AS POURED AGAINST FIRM UNDISTURBED EARTH.
2. DIMENSION C1,C2,C3 SHOULD BE LARGE ENOUGH TO MAKE ANGLE Θ EQUAL TO OR LARGER THAN 45°.
3. DIMENSION A1,A2,A3 SHOULD BE AS LARGE AS POSSIBLE WITHOUT INTERFERING WITH MJ BOLTS.
4. PROVIDE POLYETHYLENE WRAP AROUND ALL WATERMAIN.
5. ALL BENDS AND FITTINGS SHALL BE RESTRAINED WITH BOTH EPOXY COATED MEGA-LUGS AND THRUST BLOCKING.

PIPE SIZE	22 1/2° BEND		45° BEND		90° BEND	
	B_1	D_1	B_2	D_2	B_3	D_3
6"	1'-5"	1'-5"	1'-5"	1'-5"	2'-1"	1'-6"
8"	1'-5"	1'-5"	2'-1"	1'-6"	2'-8"	2'-0"
12"	1'-10"	1'-10"	3'-4"	2'-0"	4'-9"	2'-6"
16"	3'-0"	2'-0"	3'-10"	3'-0"	6'-2"	3'-6"
20"	3'-6"	2'-8"	5'-6'	3'-4"	8'-4"	4'-0"
24"	4'-4"	3'-0"	6'-10"	3'-10"	9'-8"	5'-0"
30"	-	-	9'-3"	6'-0"	17'-0"	6'-0"

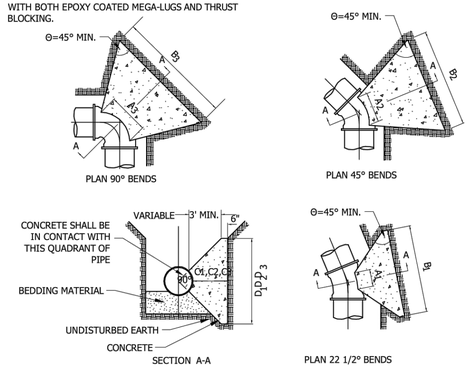

Stantec
2335 Highway 36 W
St. Paul, MN 55113
www.stantec.com

CONCRETE THRUST BLOCKING

CHASKA, MINNESOTA

LAST REVISION: APRIL 2005

PLATE NO. WAT-4

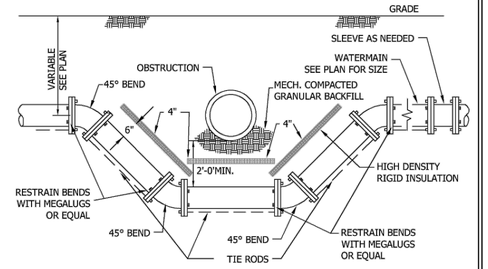

1. USE EPOXY COATED MEGALUG THRUST RESTRAINTS AND COATED TIE RODS ON ALL JOINTS AND FITTINGS. CORE BLUE BOLTS REQUIRED ON ALL MECHANICAL JOINTS.
2. RESTRAIN A MINIMUM OF TWO PIPE JOINTS (40 LF) LEFT AND RIGHT OF THE LOWERING.
3. SEE PLATE NO. GEN-11 TO DETERMINE THE WIDTH OF THE INSULATING BOARD REQUIRED
4. SEE PLATE NO. WAT-4 TO DETERMINE THE REQUIRED CONCRETE THRUST BLOCKING.
5. ANTI CORROSIVE COATING REQUIRED ON ALL BOLT AND RESTRAINT ASSEMBLIES AND WELDS.
6. SACRAFICIAL ZINC ANODE CAPS ON EACH SIDE OF WATER FITTINGS. SEE ENGINEERING GUIDELINES.
7. INSTALL POLYETHELENE FILM WRAP AROUND ALL PIPE INCLUDED IN THE LOWERING.

Stantec
733 Marquette Ave Suite 1000
Minneapolis, MN 55402
www.stantec.com

WATER MAIN LOWERING WITH INSULATION DETAIL

CHASKA, MINNESOTA

LAST REVISION: MARCH 2019

PLATE NO. WAT-6

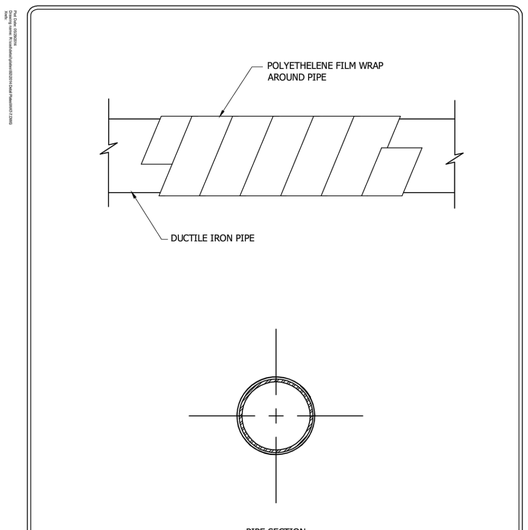

Stantec
2335 Highway 36 W
St. Paul, MN 55113
www.stantec.com

TYPICAL WATER MAIN INSTALLATION

CHASKA, MINNESOTA

LAST REVISION: MARCH 2008

PLATE NO. WAT-7

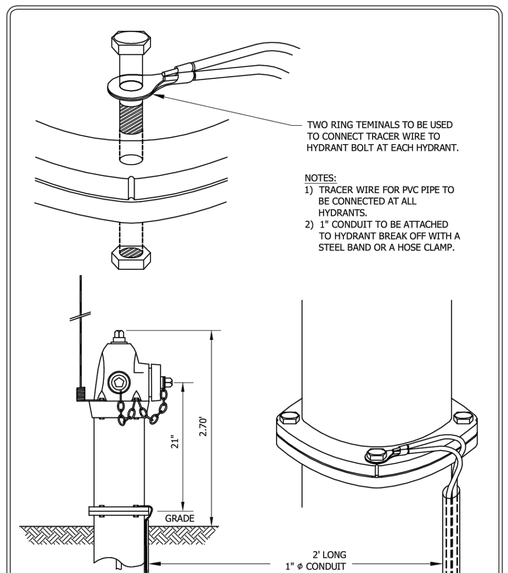

Stantec
2335 Highway 36 W
St. Paul, MN 55113
www.stantec.com

TRACER WIRE FOR PVC WATER MAIN

CHASKA, MN

LAST REVISION: APRIL 2008

PLATE NO. WAT-10

PIONEERengineering
CIVIL ENGINEERS LAND PLANNERS LAND SURVEYORS LANDSCAPE ARCHITECTS
2422 Enterprise Drive
Mendota Heights, MN 55120
(651) 681-1914
Fax: 681-9488
www.pioneereng.com

I hereby certify that this plan was prepared by me or under my direct supervision and that I am a duly Licensed Professional Engineer under the laws of the State of Minnesota
Name Brian N. Molinaro
Reg. No. 47504 Date 05-03-2022

Revisions

Date 05-03-2022
Designed NAP
Drawn RZ
Checked BNM

CITY DETAILS

JOHNSON - REILAND
616 HIGHWAY 3
DUNDAS, MINNESOTA 55019

ENSCONCED WOODS
CHASKA, MINNESOTA

01-ENG-120158-SHEET-DTLS

13.12 OF 36

© 2022 Pioneer Engineering, P.A.

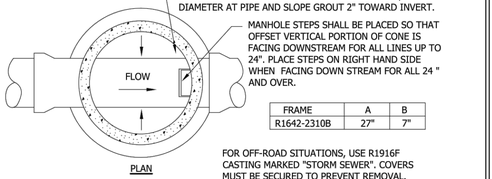

FRAME	A	B
R1642-2310B	27"	7"

Stantec
2335 Highway 36 W
St. Paul, MN 55113
www.stantec.com

STORM SEWER MANHOLE

CHASKA, MINNESOTA

LAST REVISION: MARCH 2018

PLATE NO. STO-1

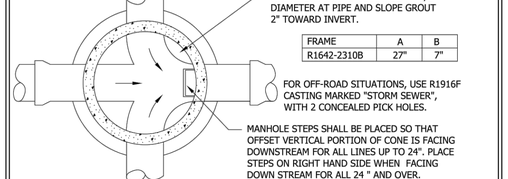

FRAME	A	B
R1642-2310B	27"	7"

Stantec
2335 Highway 36 W
St. Paul, MN 55113
www.stantec.com

STORM SEWER JUNCTION MANHOLE

CHASKA, MINNESOTA

LAST REVISION: MARCH 2018

PLATE NO. STO-2

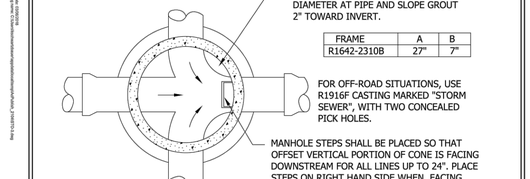

NOTE: A MINIMUM SLOPE OF 1% IS REQUIRED ACROSS THE INVERT.

Stantec
2335 Highway 36 W
St. Paul, MN 55113
www.stantec.com

STORM SEWER JUNCTION MANHOLE WITH REINFORCED TOP SLAB

CHASKA, MINNESOTA

LAST REVISION: MARCH 2018

PLATE NO. STO-3

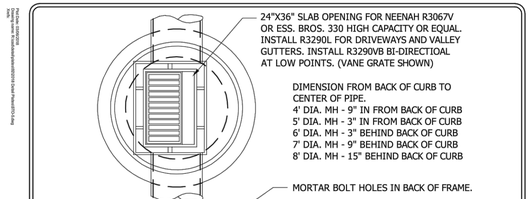

Stantec
2335 Highway 36 W
St. Paul, MN 55113
www.stantec.com

TYPE II CATCHBASIN

CHASKA, MINNESOTA

LAST REVISION: MARCH 2018

PLATE NO. STO-5

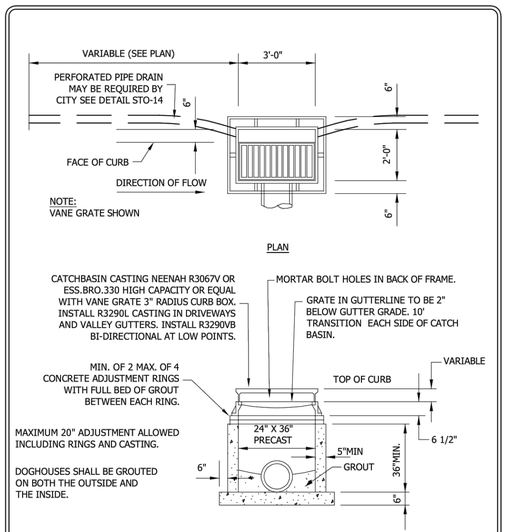

Stantec
2335 Highway 36 W
St. Paul, MN 55113
www.stantec.com

TYPE II CATCHBASIN

CHASKA, MINNESOTA

LAST REVISION: MARCH 2018

PLATE NO. STO-6

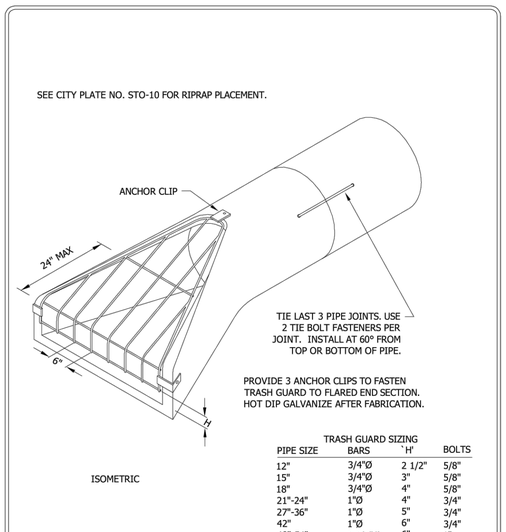

TRASH GUARD SIZING

PIPE SIZE	BARS	`H'	BOLTS
12"	3/4"Ø	2 1/2"	5/8"
15"	3/4"Ø	3"	5/8"
18"	3/4"Ø	4"	5/8"
21"-24"	1"Ø	4"	3/4"
27"-36"	1"Ø	5"	3/4"
42"	1"Ø	6"	3/4"
48"-54"	1 1/4"Ø	6"	1"
60"-72"	1 1/4"Ø	7"	1"
78"-90"	1 1/4"Ø	8"	1"

Stantec
2335 Highway 36 W
St. Paul, MN 55113
www.stantec.com

FLARED END SECTION AND TRASH GUARD

CHASKA, MINNESOTA

LAST REVISION: FEB. 1995

PLATE NO. STO-10

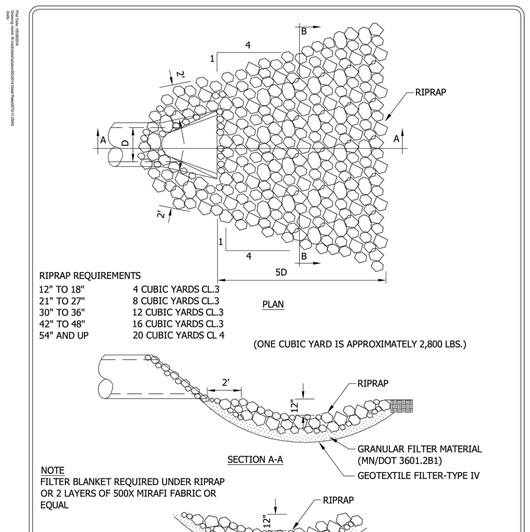

RIPRAP REQUIREMENTS

12" TO 18"	4 CUBIC YARDS CL.3
21" TO 27"	8 CUBIC YARDS CL.3
30" TO 36"	12 CUBIC YARDS CL.3
42" TO 48"	16 CUBIC YARDS CL.3
54" AND UP	20 CUBIC YARDS CL 4

(ONE CUBIC YARD IS APPROXIMATELY 2,800 LBS.)

NOTE
FILTER BLANKET REQUIRED UNDER RIPRAP OR 2 LAYERS OF 500X MIRAFI FABRIC OR EQUAL

Stantec
2335 Highway 36 W
St. Paul, MN 55113
www.stantec.com

RIPRAP AT OUTLETS

CHASKA, MINNESOTA

LAST REVISION: APRIL 2004

PLATE NO. STO-11

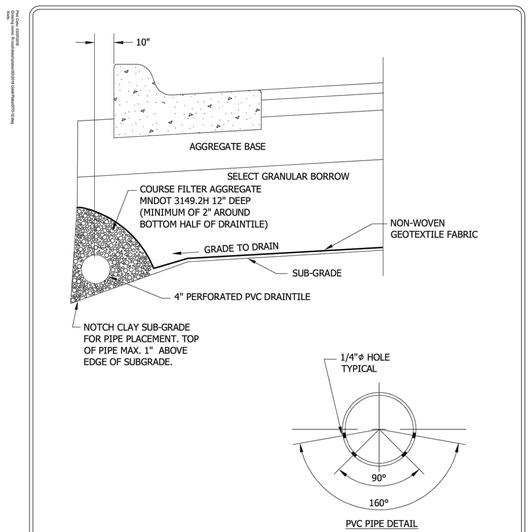

Stantec
2335 Highway 36 W
St. Paul, MN 55113
www.stantec.com

PERFORATED PVC DRAINTILE PIPE BELOW CONCRETE CURB

CHASKA, MINNESOTA

LAST REVISION: NOV. 2016

PLATE NO. STO-12

PIONEERengineering
CIVIL ENGINEERS LAND PLANNERS LAND SURVEYORS LANDSCAPE ARCHITECTS

2422 Enterprise Drive
Mendota Heights, MN 55120
(651) 681-1914
Fax: 681-9488
www.pioneereng.com

I hereby certify that this plan was prepared by me or under my direct supervision and that I am a duly Licensed Professional Engineer under the laws of the State of Minnesota

Name: Brian N. Molinaro
Reg. No. 47504 Date 05-03-2022

Revisions

Date 05-03-2022
Designed NAP
Drawn RZ
Checked BNM

CITY DETAILS

JOHNSON - REILAND
616 HIGHWAY 3
DUNDAS, MINNESOTA 55019

ENSCONCED WOODS
CHASKA, MINNESOTA

01-ENG-120158-SHEET-DTLS

13.13 OF 36

© 2022 Pioneer Engineering, P.A.

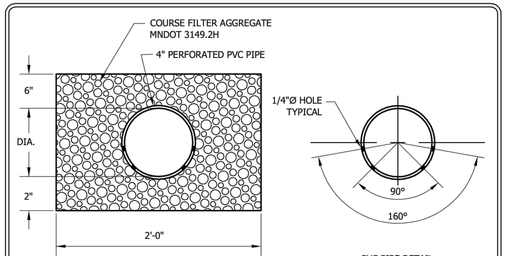

Stantec
2335 Highway 36 W
St. Paul, MN 55113
www.stantec.com

PERFORATED PIPE
TRENCH DETAIL

CHASKA, MINNESOTA

LAST REVISION:
NOV. 2014

PLATE NO.
STO-13

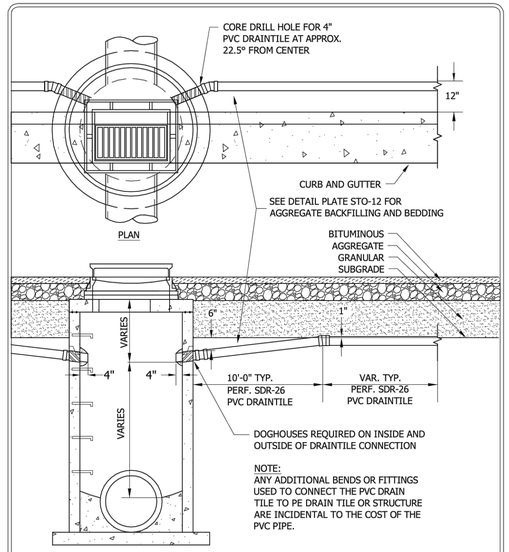

Stantec
2335 Highway 36 W
St. Paul, MN 55113
www.stantec.com

DRAINTILE INSTALLATION INTO
CATCHBASIN MANHOLE

CHASKA, MINNESOTA

LAST REVISION:
APRIL 2016

PLATE NO.
STO-14

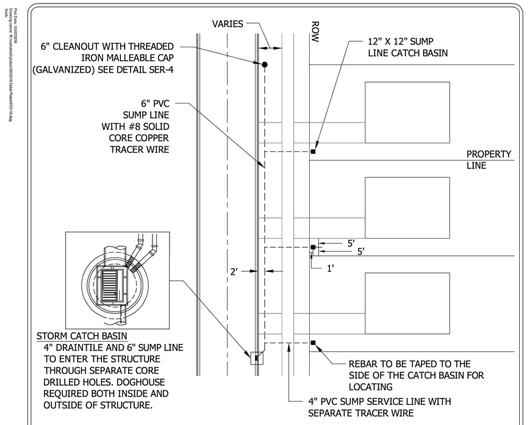

NOTES:
1. 6" PVC SUMP LINE TO BE INSTALLED 2' BELOW GRADE AND TO BE CORE DRILLED INTO NEAREST DOWNSTREAM CATCH BASIN.
2. EXTEND 4" PVC SUMP SERVICE FROM MAIN TO RIGHT OF WAY.
3. ALTERNATE CONFIGURATIONS ONLY WITH THE APPROVAL OF OWNER.
4. SEE ENGINEERING GUIDELINES OR SPECIFICATIONS FOR ADDITIONAL INFORMATION.
5. MAXIMUM SUMP LINE LENGTH 300'. IF LONGER SUMP LINE IS NECESSARY, INTERMEDIATE CLEANOUTS WILL BE REQUIRED EVERY 200'.
6. INSTALL 4" X 4" POST ADJACENT TO EACH SUMP CATCH BASIN FOR PROTECTION DURING CONSTRUCTION.
7. CLEAN OUT TO BE PLACED ON PROPERTY LINE AT END OF LAST SERVICE LINE. IF SERVICE FALLS IN DRIVEWAY THE MAINLINE WILL BE EXTENDED BEYOND DRIVEWAY/ALLEY TO ENSURE THE CLEANOUT IS IN GREEN SPACE.
8. A SEPARATE TRACER WIRE WILL EXTEND FROM THE FINISHED GRADE CLEANOUT LOCATION WITH TRACER WIRE BOX AND FOLLOW THE SUMP LINE TO THE STRUCTURE LOCATION.

Stantec
2335 Highway 36 W
St. Paul, MN 55113
www.stantec.com

PVC SUMP LINE
BEHIND CURB

CHASKA, MINNESOTA

LAST REVISION:
MAY 2016

PLATE NO.
STO-15

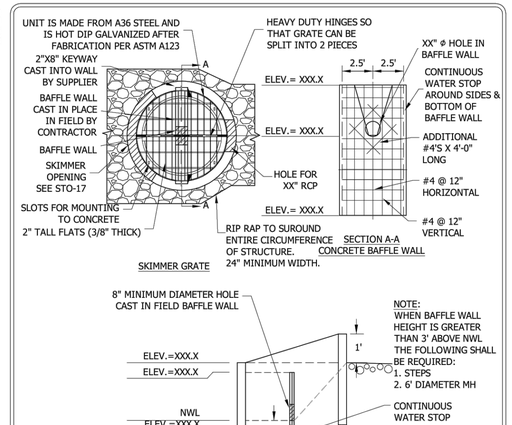

Stantec
2335 Highway 36 W
St. Paul, MN 55113
www.stantec.com

SKIMMER STRUCTURE WITH
CAST IN FIELD
CONCRETE BAFFLE WALL

CHASKA, MINNESOTA

LAST REVISION:
MARCH 2018

PLATE NO.
STO-18

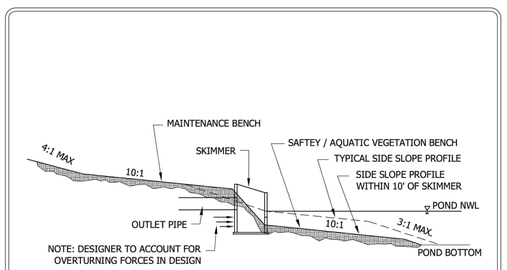

Stantec
2335 Highway 36 W
St. Paul, MN 55113
www.stantec.com

TYPICAL BENCH DETAIL

CHASKA, MINNESOTA

LAST REVISION:
MARCH 2001

PLATE NO.
STO-19

PIONEERengineering
CIVIL ENGINEERS LAND PLANNERS LAND SURVEYORS LANDSCAPE ARCHITECTS

2422 Enterprise Drive
Mendota Heights, MN 55120
(651) 681-1914
Fax: 681-9488
www.pioneereng.com

I hereby certify that this plan was prepared by me or under my direct supervision and that I am a duly Licensed Professional Engineer under the laws of the State of Minnesota

Name Brian N. Molinaro
Reg. No. 47504 Date 05-03-2022

Revisions

Date 05-03-2022
Designed NAP
Drawn RZ
Checked BNM

CITY DETAILS

JOHNSON - REILAND
616 HIGHWAY 3
DUNDAS, MINNESOTA 55019

ENSCONCED WOODS
CHASKA, MINNESOTA

01-ENG-120158-SHEET-DTLS

13.14 OF 36

© 2022 Pioneer Engineering, P.A.

CONCRETE MATERIALS AS FOLLOWS:
3F52 - MANUAL PLACEMENT
3F32 - SLIP FORM PLACEMENT

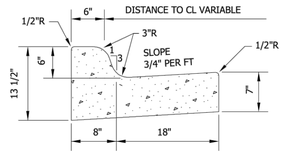

MNDOT B618

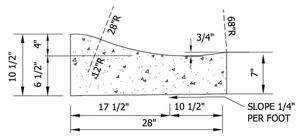

SURMOUNTABLE

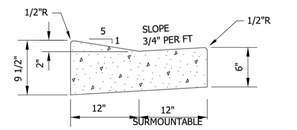

DRIVEWAY

Stantec
2335 Highway 36 W
St. Paul, MN 55113
www.stantec.com

CURB AND GUTTER

CHASKA, MINNESOTA

LAST REVISION: APRIL 2016

PLATE NO. STR-1

NOTE:
SURMOUNTABLE CURB & GUTTER TO BE FORMED INTO A B618 TYPE AT CATCHBASIN.

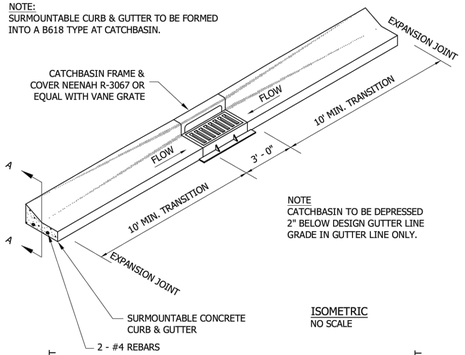

NOTE
CATCHBASIN TO BE DEPRESSED 2" BELOW DESIGN GUTTER LINE GRADE IN GUTTER LINE ONLY.

ISOMETRIC
NO SCALE

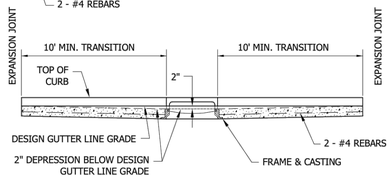

SECTION A-A
NO SCALE

Stantec
2335 Highway 36 W
St. Paul, MN 55113
www.stantec.com

SURMOUNTABLE CURB & GUTTER CONSTRUCTION AT CATCHBASIN

CHASKA, MINNESOTA

LAST REVISION: MARCH 2008

PLATE NO. STR-5

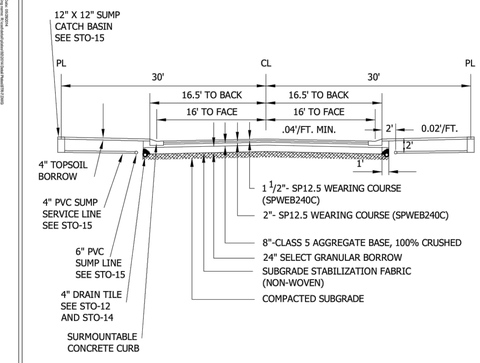

STANDARD STREET SECTION (7 TON)

NOTES:
1. ALL ORGANIC OR OTHER UNSUITABLE MATERIALS SHALL BE REMOVED FROM BENEATH THE ROADWAY.
2. A TEST ROLL OF THE PREPARED SUBGRADE SHALL BE PERFORMED BY THE OWNER IN THE PRESENCE OF A CITY INSPECTOR. THE CITY HAS THE AUTHORITY TO REQUIRE ADDITIONAL SUBGRADE CORRECTION OR ELIMINATE THE STABILIZATION FABRIC.
3. THE CITY RESERVES THE RIGHT TO MODIFY STREET SECTION AS REQUIRED.
4. NO CONCRETE WORK OR BITUMINOUS PAVING SHALL OCCURE AFTER OCTOBER 31ST UNLESS AUTHORIZED BY THE CITY OF CHASKA.
5. STREET WIDTH TO BE DETERMINED BY PROJECTED TRAFFIC VOLUMES.
6. RECYCLE MATERIAL ACCEPTED AS CLASS 5 AGGREGATE BASE SUBSTITUTE IF MEETING GUIDELINES.

Stantec
2335 Highway 36 W
St. Paul, MN 55113
www.stantec.com

TYPICAL SECTIONS FOR RESIDENTIAL STREETS
7 TON SECTION

CHASKA, MINNESOTA

LAST REVISION: JUNE 2012

PLATE NO. STR-7

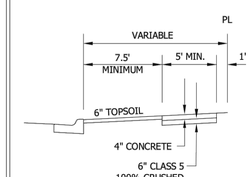

CONC. MIX: 3F52 (MANUAL PLACEMENT)
3F32 (SLIP FORM PLACEMENT)

NEIGHBORHOOD SIDEWALK

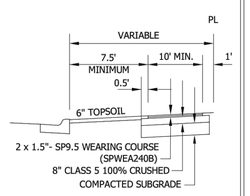

* BIT SHALL BE PLACED AND COMPACTED IN 2 LIFTS

COMMUNITY ROADWAY TRAIL
URBAN SECTION

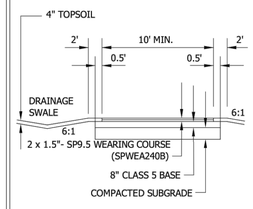

* BIT SHALL BE PLACED AND COMPACTED IN 2 LIFTS

COMMUNITY GREENWAY TRAIL

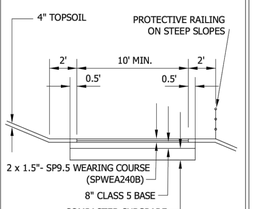

* BIT SHALL BE PLACED AND COMPACTED IN 2 LIFTS

COMMUNITY GREENWAY TRAIL
SIDE SLOPE LOCATION

Stantec
2335 Highway 36 W
St. Paul, MN 55113
www.stantec.com

TYPICAL PLACEMENT AND SECTION FOR WALKS AND TRAILS

CHASKA, MINNESOTA

LAST REVISION: APRIL 2016

PLATE NO. STR-9

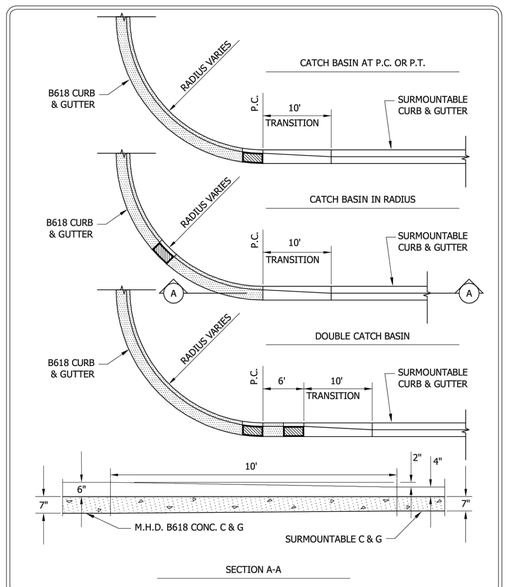

SECTION A-A

Stantec
2335 Highway 36 W
St. Paul, MN 55113
www.stantec.com

CONCRETE CURB & GUTTER TRANSITION

CHASKA, MINNESOTA

LAST REVISION: OCT. 1989

PLATE NO. STR-10

NOTE: PLACE NEENAH CAST IRON UNCOATED TRUNCATED DOMES THE WIDTH OF OPENING.

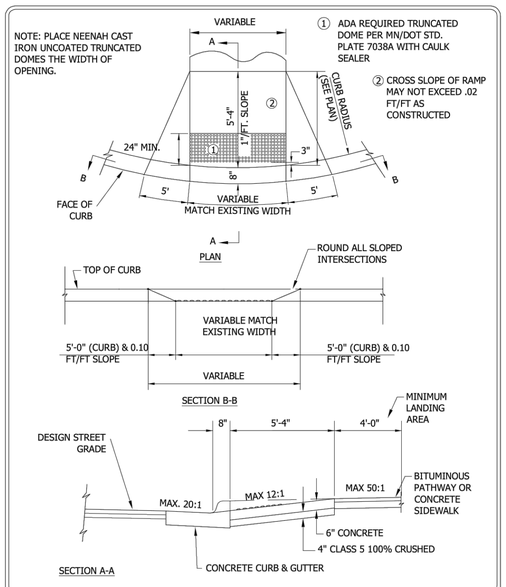

SECTION A-A

Stantec
2335 Highway 36 W
St. Paul, MN 55113
www.stantec.com

PEDESTRIAN CURB RAMP FOR PATHWAY/SIDEWALK

CHASKA, MINNESOTA

LAST REVISION: APRIL 2011

PLATE NO. STR-11

PIONEERengineering
CIVIL ENGINEERS LAND PLANNERS LAND SURVEYORS LANDSCAPE ARCHITECTS
2422 Enterprise Drive
Mendota Heights, MN 55120
(651) 681-1914
Fax: 681-9488
www.pioneereng.com

I hereby certify that this plan was prepared by me or under my direct supervision and that I am a duly Licensed Professional Engineer under the laws of the State of Minnesota

Name: Brian N. Molinaro
Reg. No. 47504 Date 05-03-2022

Revisions

Date 05-03-2022
Designed NAP
Drawn RZ
Checked BNM

CITY DETAILS

JOHNSON - REILAND
616 HIGHWAY 3
DUNDAS, MINNESOTA 55019

ENSCONCED WOODS
CHASKA, MINNESOTA

01-ENG-120158-SHEET-DTLS

13.15 OF 36

© 2022 Pioneer Engineering, P.A.

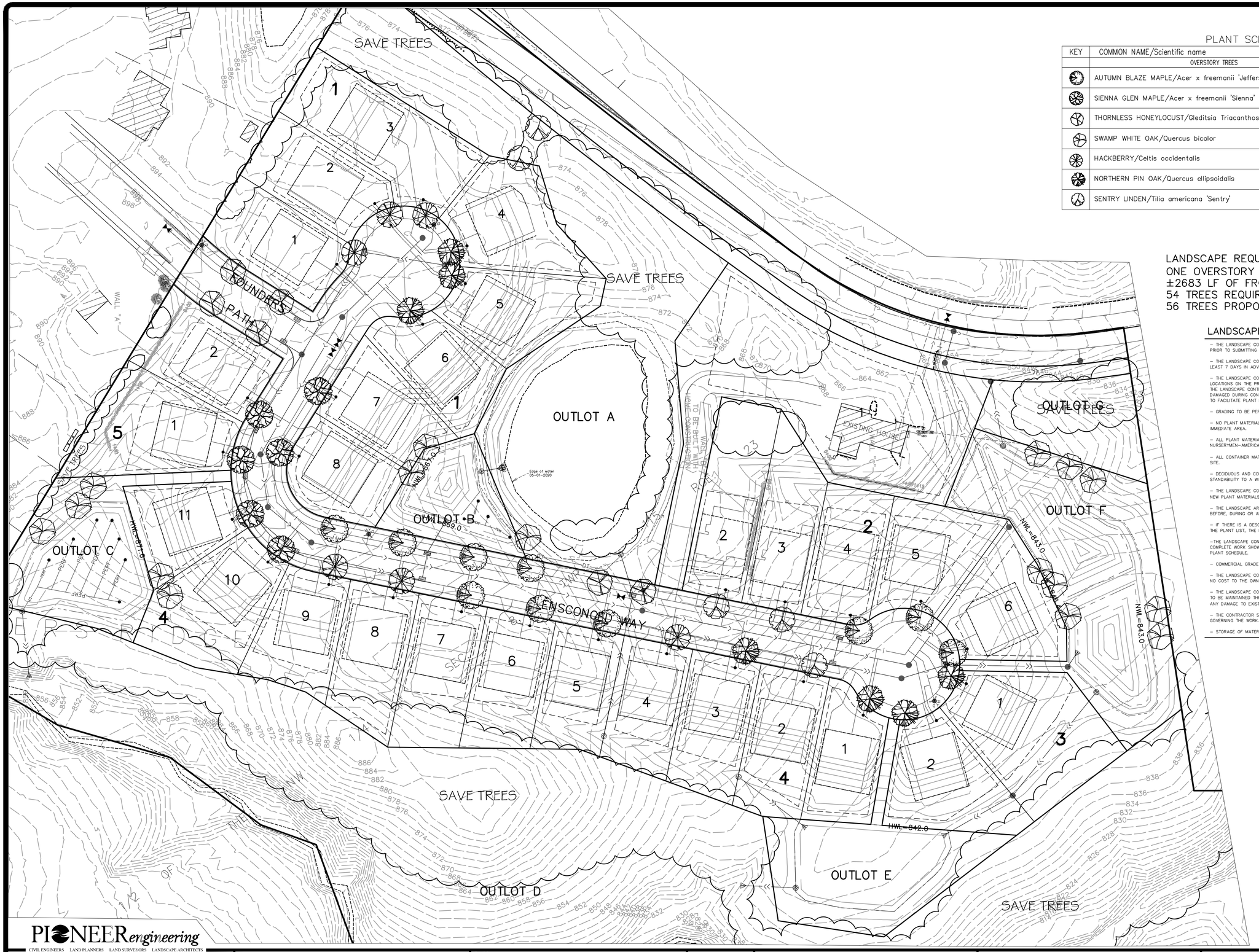

PLANT SCHEDULE

KEY	COMMON NAME/Scientific name	ROOT	QUANTITY	NOTES
	OVERSTORY TREES			
	AUTUMN BLAZE MAPLE/Acer x freemanii 'Jeffersred'	2.5" B&B	10	
	SIENNA GLEN MAPLE/Acer x freemanii 'Sienna'	2.5" B&B	6	
	THORNLESS HONEYLOCUST/Gleditsia Triacanthos form inermis	2.5" B&B	7	
	SWAMP WHITE OAK/Quercus bicolor	2.5" B&B	16	Clump
	HACKBERRY/Celtis occidentalis	2.5" B&B	6	
	NORTHERN PIN OAK/Quercus ellipsoidalis	2.5" B&B	7	
	SENTRY LINDEN/Tilia americana 'Sentry'	2.5" B&B	5	

LANDSCAPE REQUIREMENTS:
ONE OVERSTORY TREE PER 50' OF ROAD FRONTAGE:
±2683 LF OF FRONTAGE
54 TREES REQUIRED
56 TREES PROPOSED

LANDSCAPE NOTES

– THE LANDSCAPE CONTRACTOR SHALL VISIT THE PROJECT SITE TO BECOME FAMILIAR WITH THE EXISTING CONDITIONS PRIOR TO SUBMITTING A BID.

– THE LANDSCAPE CONTRACTOR SHALL NOTIFY THE LANDSCAPE ARCHITECT OF PROPOSED PHYSICAL START DATE AT LEAST 7 DAYS IN ADVANCE.

– THE LANDSCAPE CONTRACTOR SHALL BE RESPONSIBLE FOR THE FIELD VERIFICATION OF ALL EXISTING UTILITY LOCATIONS ON THE PROJECT SITE WITH GOPHER STATE ONE CALL 1-800-252-1166 PRIOR TO COMMENCING WORK. THE LANDSCAPE CONTRACTOR SHALL BE RESPONSIBLE FOR THE PROTECTION AND REPAIR OF EXISTING UTILITIES DAMAGED DURING CONSTRUCTION AT NO COST TO THE OWNER. NOTIFY THE LANDSCAPE ARCHITECT OF ANY CONFLICTS TO FACILITATE PLANT RELOCATION.

– GRADING TO BE PERFORMED BY OTHERS.

– NO PLANT MATERIAL SHALL BE INSTALLED UNTIL GRADING AND CONSTRUCTION HAS BEEN COMPLETED IN THE IMMEDIATE AREA.

– ALL PLANT MATERIAL SHALL MEET THE STANDARDS FOUND IN THE AMERICAN ASSOCIATION OF NURSERYMEN–AMERICAN STANDARD FOR NURSERY STOCK.

– ALL CONTAINER MATERIAL TO BE GROWN IN THE CONTAINER A MINIMUM OF SIX (6) MONTHS PRIOR TO PLANTING ON SITE.

– DECIDUOUS AND CONIFEROUS TREES SHALL NOT BE STAKED, BUT THE LANDSCAPE CONTRACTOR MUST GUARANTEE STANDABILITY TO A WIND SPEED OF 60 M.P.H.

– THE LANDSCAPE CONTRACTOR SHALL PROVIDE A MINIMUM GUARANTEE OF ONE YEAR ONE TIME REPLACEMENT ON NEW PLANT MATERIALS. GUARANTEE SHALL BE AGREED UPON BY DEVELOPER/BUILDER AND LANDSCAPE CONTRACTOR.

– THE LANDSCAPE ARCHITECT RESERVES THE RIGHT TO REJECT ANY PLANTS WHICH ARE DEEMED UNSATISFACTORY BEFORE, DURING OR AFTER INSTALLATION.

– IF THERE IS A DESCREPANCY BETWEEN THE NUMBER OF PLANTS SHOWN ON THE PLAN AND THE NUMBER SHOWN ON THE PLANT LIST, THE NUMBER SHOWN ON THE PLAN WILL TAKE PRECEDENCE.

–THE LANDSCAPE CONTRACTOR SHALL BE RESPONSIBLE FOR ALL MULCHES AND PLANTING SOIL QUANTITIES TO COMPLETE WORK SHOWN ON THE PLAN. THE LANDSCAPE CONTRACTOR SHALL VERIFY ALL QUANTITIES SHOWN ON THE PLANT SCHEDULE.

– COMMERCIAL GRADE POLY LAWN EDGING SHALL BE INSTALLED WHERE NOTED.

– THE LANDSCAPE CONTRACTOR SHALL REPAIR ALL DAMAGE TO THE SITE CAUSED BY THE PLANTING OPERATION AT NO COST TO THE OWNER.

– THE LANDSCAPE CONTRACTOR SHALL KEEP PAVEMENTS CLEAN UNSTAINED. ALL PEDESTRIAN AND VEHICLE ACCESS TO BE MAINTAINED THROUGHOUT CONSTRUCTION PERIOD. ALL WASTES SHALL BE PROMPTLY REMOVED FROM THE SITE. ANY DAMAGE TO EXISTING FACILITIES SHALL BE REPAIRED AT THE CONTRACTOR'S EXPENSE.

– THE CONTRACTOR SHALL BE RESPONSIBLE FOR COMPLYING WITH ALL APPLICABLE CODES, REGULATIONS AND PERMITS GOVERNING THE WORK.

– STORAGE OF MATERIALS OR SUPPLIES ON–SITE WILL NOT BE ALLOWED.

N

0 25 50 100
GRAPHIC SCALE IN FEET

01-PLAN-120158-SHEET-LAND.DWG

PIONEERengineering
CIVIL ENGINEERS LAND PLANNERS LAND SURVEYORS LANDSCAPE ARCHITECTS
2422 Enterprise Drive
Mendota Heights, MN 55120
(651) 681-1914
Fax: 681-9488
www.pioneereng.com

I hereby certify that this plan was prepared by me or under my direct supervision and that I am a duly Licensed Landscape Architect under the laws of the State of Minnesota
Name Jennifer L. Thompson
Reg. No. 44763 Date 5-3-2022

Revisions

Date	05-03-2022
Designed	JLT
Drawn	JLT

LANDSCAPE PLAN

JOHNSON - REILAND
616 HIGHWAY 3
DUNDAS, MINNESOTA 55019

ENSCONCED WOODS
CHASKA, MINNESOTA

L1 OF 1

© 2022 Pioneer Engineering, P.A.

TREE PRESERVATION NOTES

BEFORE LAND CLEARING BEGINS, CONTRACTOR SHOULD MEET WITH THE CONSULTANT ON SITE TO REVIEW ALL WORK PROCEDURES, ACCESS ROUTES, STORAGE AREAS, AND TREE PROTECTION MEASURES.

NO FILL SHOULD BE PLACED AGAINST THE TRUNK, ON THE ROOT CROWN, OR WITHIN THE DRIP LINE AREA OF ANY TREES THAT ARE TO BE SAVED.

NO GRADING, TRENCHING OR PLACEMENT OF EQUIPMENT IS ALLOWED IN THE TREE PROTECTION AREA.

WORK PERFORMED WITHIN THE TREE PROTECTION AREA SHOULD BE DONE BY HAND AND UNDER THE SUPERVISION OF THE CONSULTING ARBORIST.

PRUNING OF OAK TREES MUST NOT TAKE PLACE FROM APRIL 15 TO JULY 15 TO PREVENT THE SPREAD OF OAK WILT DISEASE.

IF WOUNDING OF OAK TREES OCCUR ANYTIME BETWEEN APRIL TO AUGUST, A NON-TOXIC WOUND DRESSING MUST BE APPLIED IMMEDIATELY, (EXCAVATORS MUST HAVE A NON-TOXIC TREE WOUND DRESSING WITH THEM ON DEVELOPMENT SITES).

TREE PROTECTION DETAIL

NOT TO SCALE

TREES TO BE SAVED SHALL BE FENCED OFF WITH BRIGHT ORANGE POLYETHYLENE SAFETY NETTING OR HEAVY DUTY SILT FENCE AND STEEL STAKES AT THE DRIP LINE, OR AS DIRECTED BY THE OWNER'S CONSULTANT.

PROTECTION FENCE WILL HELP INSURE AGAINST DAMAGE BY VEHICLES, COMPACTION OF SOILS, AND/OR THE CHEMICAL ALTERATION OF SOILS DUE TO CONCRETE WASHOUT, PAINTS AND LEAKAGE OR SPILLAGE OF ANY TOXIC MATERIALS.

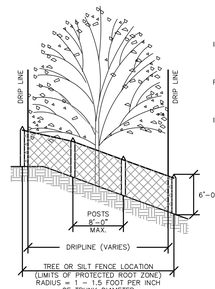

TREE OR SILT FENCE LOCATION
(LIMITS OF PROTECTED ROOT ZONE)
RADIUS = 1 ~ 1.5 FOOT PER INCH OF TRUNK DIAMETER

INSTALL TREE OR SILT FENCE PRIOR TO OR AT SAME TIME AS LAND CLEARING.

PROTECTION FENCE SHOULD REMAIN IN PLACE UNTIL ALL CONSTRUCTION IS COMPLETE.

IF PROTECTION FENCE IS DAMAGED OR REMOVED, NEW FENCING MUST BE PLACED BACK IN ORIGINAL POSITION UNTIL CONSTRUCTION IS COMPLETE.

TREE IDENTIFICATION PROVIDED BY:
KEN ARNDT, SR. FOREST ECOLOGIST, CWD
MIDWEST NATURAL RESOURCES, INC.

SEE LANDSCAPE PLAN FOR PROPOSED TREES

X 9248 = TREE TO BE SAVED

⊠ 9248 = TREE TO BE REMOVED

□ 9248 = TREE LOCATED OFF SITE

0 20 40 80
GRAPHIC SCALE IN FEET

01-PLAN-120158-SHEET-TREE.DWG

PIONEER Engineering
CIVIL ENGINEERS LAND PLANNERS LAND SURVEYORS LANDSCAPE ARCHITECTS
2422 Enterprise Drive
Mendota Heights, MN 55120
(651) 681-1914
Fax: 681-9488
www.pioneereng.com

I hereby certify that this plan was prepared by me or under my direct supervision and that I am a duly Licensed Landscape Architect under the laws of the State of Minnesota

Name Jennifer L. Thompson
Reg. No. 44763 Date 5-3-2022

Revisions

Date 05-03-2022
Designed TLM
Drawn TLM
Checked JLT

TREE PRESERVATION

JOHNSON - REILAND
616 HIGHWAY 3
DUNDAS, MINNESOTA 55019

ENSCONCED WOODS
CHASKA, MINNESOTA

T1 OF 6

© 2022 Pioneer Engineering, P.A.

MATCH LINE

MATCH LINE

EXISTING HOUSE

NWL=843.0

NWL=840.0

NWL=843.0

TREE PRESERVATION NOTES

BEFORE LAND CLEARING BEGINS, CONTRACTOR SHOULD MEET WITH THE CONSULTANT ON SITE TO REVIEW ALL WORK PROCEDURES, ACCESS ROUTES, STORAGE AREAS, AND TREE PROTECTION MEASURES.

NO FILL SHOULD BE PLACED AGAINST THE TRUNK, ON THE ROOT CROWN, OR WITHIN THE DRIP LINE AREA OF ANY TREES THAT ARE TO BE SAVED.

NO GRADING, TRENCHING OR PLACEMENT OF EQUIPMENT IS ALLOWED IN THE TREE PROTECTION AREA.

WORK PERFORMED WITHIN THE TREE PROTECTION AREA SHOULD BE DONE BY HAND AND UNDER THE SUPERVISION OF THE CONSULTING ARBORIST.

PRUNING OF OAK TREES MUST NOT TAKE PLACE FROM APRIL 15 TO JULY 15 TO PREVENT THE SPREAD OF OAK WILT DISEASE.

IF WOUNDING OF OAK TREES OCCUR ANYTIME BETWEEN APRIL TO AUGUST, A NON-TOXIC WOUND DRESSING MUST BE APPLIED IMMEDIATELY, (EXCAVATORS MUST HAVE A NON-TOXIC TREE WOUND DRESSING WITH THEM ON DEVELOPMENT SITES).

TREE PROTECTION DETAIL

NOT TO SCALE

TREES TO BE SAVED SHALL BE FENCED OFF WITH BRIGHT ORANGE POLYETHYLENE SAFETY NETTING OR HEAVY DUTY SILT FENCE AND STEEL STAKES AT THE DRIP LINE, OR AS DIRECTED BY THE OWNER'S CONSULTANT.

PROTECTION FENCE WILL HELP INSURE AGAINST DAMAGE BY VEHICLES, COMPACTION OF SOILS, AND/OR THE CHEMICAL ALTERATION OF SOILS DUE TO CONCRETE WASHOUT, PAINTS AND LEAKAGE OR SPILLAGE OF ANY TOXIC MATERIALS.

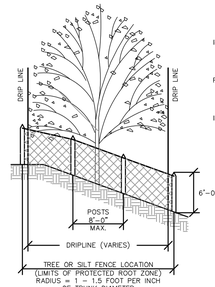

INSTALL TREE OR SILT FENCE PRIOR TO OR AT SAME TIME AS LAND CLEARING.

PROTECTION FENCE SHOULD REMAIN IN PLACE UNTIL ALL CONSTRUCTION IS COMPLETE.

IF PROTECTION FENCE IS DAMAGED OR REMOVED, NEW FENCING MUST BE PLACED BACK IN ORIGINAL POSITION UNTIL CONSTRUCTION IS COMPLETE.

TREE IDENTIFICATION PROVIDED BY:
KEN ARNDT, SR. FOREST ECOLOGIEST, CWD
MIDWEST NATURAL RESOURCES, INC.

SEE LANDSCAPE PLAN FOR PROPOSED TREES

X 9248 = TREE TO BE SAVED

⊠ 9248 = TREE TO BE REMOVED

□ 9248 = TREE LOCATED OFF SITE

0 20 40 80

GRAPHIC SCALE IN FEET

01-PLAN-120158-SHEET-TREE.DWG

PIONEER engineering
CIVIL ENGINEERS LAND PLANNERS LAND SURVEYORS LANDSCAPE ARCHITECTS
2422 Enterprise Drive
Mendota Heights, MN 55120
(651) 681-1914
Fax: 681-9488
www.pioneereng.com

I hereby certify that this plan was prepared by me or under my direct supervision and that I am a duly Licensed Landscape Architect under the laws of the State of Minnesota

Name Jennifer L. Thompson
Reg. No. 44763 Date 5-3-2022

Revisions

Date	05-03-2022
Designed	TLM
Drawn	TLM
Checked	JLT

TREE PRESERVATION

JOHNSON - REILAND
616 HIGHWAY 3
DUNDAS, MINNESOTA 55019

ENSCONCED WOODS
CHASKA, MINNESOTA

T2 OF 6

© 2022 Pioneer Engineering, P.A.

Tag #	DBH	Common Name	Scientific Name	Notes	Status
3226	12	American Elm	*Ulmus americana*		Remove
3227	10	Box Elder	*Acer negundo*		Remove
3228	14	Red Cedar	*Juniperus virginiana*		Remove
3229	66	Cottonwood	*Populus deltoides*	in decline, 40% top dead	Remove
3230	14,11	Red Cedar	*Juniperus virginiana*		Remove
3231	16	Red Cedar	*Juniperus virginiana*		Remove
3232	15	Red Cedar	*Juniperus virginiana*		Save
3233	6	American Elm	*Ulmus americana*		Save
3234	10	Hackberry	*Celtis occidentalis*		Save
3235	11	American Elm	*Ulmus americana*		Save
3236	7	Hackberry	*Celtis occidentalis*		Save
3237	7	Hackberry	*Celtis occidentalis*		Save
3238	11	Hackberry	*Celtis occidentalis*		Remove
3239	7	Bur Oak	*Quercus macrocarpa*		Remove
3240	6	Hackberry	*Celtis occidentalis*		Save
3241	10	American Elm	*Ulmus americana*		Save
3242	6	Hackberry	*Celtis occidentalis*		Save
3243	15,8	Hackberry	*Celtis occidentalis*		Save
3244	6	American Elm	*Ulmus americana*		Save
3245	6	Hackberry	*Celtis occidentalis*		Save
3246	14	American Elm	*Ulmus americana*		Save
3247	7	Hackberry	*Celtis occidentalis*		Save
3248	16	Red Cedar	*Juniperus virginiana*		Save
3249	14	Box Elder	*Acer negundo*		Remove
3250	8	Box Elder	*Acer negundo*		Remove
3251	7	Green Ash	*Fraxinus pennsylvanica*		Remove
3252	18,17	Silver Maple	*Acer saccharinum*		Remove
3253	6	Green Ash	*Fraxinus pennsylvanica*		Remove
3254	13	Green Ash	*Fraxinus pennsylvanica*		Remove
3255	8	Green Ash	*Fraxinus pennsylvanica*		Remove
3256	15,8	Silver Maple	*Acer saccharinum*		Remove
3257	18,17,12	Silver Maple	*Acer saccharinum*		Remove
3258	6	Green Ash	*Fraxinus pennsylvanica*		Remove
3259	9	Green Ash	*Fraxinus pennsylvanica*		Remove
3260	6	Green Ash	*Fraxinus pennsylvanica*		Remove
3261	7	Green Ash	*Fraxinus pennsylvanica*		Remove
3262	22	Cottonwood	*Populus deltoides*		Remove
3263	6	Green Ash	*Fraxinus pennsylvanica*		Remove
3264	13	Mulbery	*Morus* sp.		Remove
3265	10	Green Ash	*Fraxinus pennsylvanica*		Remove
3266	6	Green Ash	*Fraxinus pennsylvanica*		Remove
3267	6	Green Ash	*Fraxinus pennsylvanica*		Remove
3268	6	Green Ash	*Fraxinus pennsylvanica*		Remove
3269	7	Black Cherry	*Prunus serotina*		Remove
3270	6	Green Ash	*Fraxinus pennsylvanica*		Remove
3271	7	Siberian Elm	*Ulmus pumila*		Remove
3272	13,13	Box Elder	*Acer negundo*		Remove
3273	14,13	Siberian Elm	*Ulmus pumila*		Remove
3274	9	Box Elder	*Acer negundo*		Remove
3275	6	American Elm	*Ulmus americana*		Remove
3276	8	American Elm	*Ulmus americana*		Remove
3277	15	Siberian Elm	*Ulmus pumila*		Remove
3278	9	Basswood	*Tilia americana*		Remove
3279	8	Crabapple	*Malus* sp.		Remove
3280	16	American Elm	*Ulmus americana*		Remove
3281	7	Green Ash	*Fraxinus pennsylvanica*		Remove
3282	6,6	White Cedar	*Thuja occidentalis*		Remove
3283	5,5	White Cedar	*Thuja occidentalis*		Remove
3284	10,8,8	Box Elder	*Acer negundo*		Remove
3285	11,10,9	White Cedar	*Thuja occidentalis*		Remove
3286	15	Box Elder	*Acer negundo*		Remove
3287	6	Box Elder	*Acer negundo*		Remove
3288	18	Siberian Elm	*Ulmus pumila*		Remove
3289	16,10	Silver Maple	*Acer saccharinum*		Remove
3290	10	Box Elder	*Acer negundo*		Remove
3291	9	Green Ash	*Fraxinus pennsylvanica*		Remove
3292	24	Whitecrack Willow	*Salix x rubens*		Remove
3293	10	Siberian Elm	*Ulmus pumila*		Remove
3294	10	Box Elder	*Acer negundo*		Remove
3295	6	Silver Maple	*Acer saccharinum*		Remove
3296	8	Hackberry	*Celtis occidentalis*		Remove
3297	6	Siberian Elm	*Ulmus pumila*		Remove
3298	8	Box Elder	*Acer negundo*		Remove
3299	9	Hackberry	*Celtis occidentalis*		Remove
3300	25,16	Whitecrack Willow	*Salix x rubens*	40% top dead or damaged	Remove
3301	11	Hackberry	*Celtis occidentalis*		Remove
3302	42	Cottonwood	*Populus deltoides*	in decline	Remove
3303	26	Whitecrack Willow	*Salix x rubens*	hollow	Remove
3304	7	Box Elder	*Acer negundo*		Remove
3305	12	Siberian Elm	*Ulmus pumila*		Remove
3306	11	Cottonwood	*Populus deltoides*		Remove
3307	8	American Elm	*Ulmus americana*		Remove
3308	13,10	Box Elder	*Acer negundo*		Remove
3309	14,11	Box Elder	*Acer negundo*		Remove
3310	31,13,11,11,11,6	Basswood	*Tilia americana*		Remove
3311	11	Box Elder	*Acer negundo*		Remove
3312	14	Silver Maple	*Acer saccharinum*		Remove
3313	15,14	Box Elder	*Acer negundo*		Remove
3314	13	Box Elder	*Acer negundo*		Remove
3315	8	Box Elder	*Acer negundo*		Remove
3316	12,7	Box Elder	*Acer negundo*		Remove
3317	18,9	Silver Maple	*Acer saccharinum*		Remove
3318	16,15	Box Elder	*Acer negundo*		Remove
3319	16	Box Elder	*Acer negundo*	split at base	Remove
3320	9	Box Elder	*Acer negundo*		Remove
3321	9	Green Ash	*Fraxinus pennsylvanica*		Remove
3322	12,11	American Elm	*Ulmus americana*		Remove
3323	7	Black Walnut	*Juglans nigra*		Remove
3324	7	Black Walnut	*Juglans nigra*		Remove
3325	8	Black Walnut	*Juglans nigra*		Remove
3326	11	Black Walnut	*Juglans nigra*		Remove
3327	8	Box Elder	*Acer negundo*		Remove
3328	11	Black Walnut	*Juglans nigra*		Remove
3329	8	White Spruce	*Picea glauca*		Remove
3330	8	Black Walnut	*Juglans nigra*		Remove
3331	8	Box Elder	*Acer negundo*		Remove
3332	12,9	Box Elder	*Acer negundo*		Remove
3333	9	Box Elder	*Acer negundo*		Remove
3334	9	Black Walnut	*Juglans nigra*		Remove
3335	11,10,10	Crabapple	*Malus* sp.		Remove
3336	21	White Spruce	*Picea glauca*		Remove
3337	23	Siberian Elm	*Ulmus pumila*		Remove
3338	19	Norway Maple	*Acer platanoides*		Remove
3339	12,10	Crabapple	*Malus* sp.	decay along trunk of 12"	Remove
3340	8	Red Oak	*Quercus rubra*		Remove
3341	22	Black Walnut	*Juglans nigra*		Remove
3342	21	Silver Maple	*Acer saccharinum*		Remove
3343	27	American Elm	*Ulmus americana*		Remove
3344	15	Honey Locust	*Gleditsia triacanthos*		Remove
3345	16	Green Ash	*Fraxinus pennsylvanica*		Remove
3346	12,10,6	Crabapple	*Malus* sp.		Remove
3347	12	Norway Maple	*Acer platanoides*		Remove
3348	7	American Elm	*Ulmus americana*		Remove
3349	7	American Elm	*Ulmus americana*		Remove
3350	8,6	Silver Maple	*Acer saccharinum*		Remove
3351	11,10,9	Paper Birch	*Betula papyrifera*		Remove
3352	9	Red Pine	*Pinus resinosa*		Remove
3353	6	Green Ash	*Fraxinus pennsylvanica*		Remove
3354	17	Green Ash	*Fraxinus pennsylvanica*		Remove
3355	9	Red Pine	*Pinus resinosa*		Remove
3356	10	Red Pine	*Pinus resinosa*		Remove
3357	9	Ohio Buckeye	*Aesculus glabra*		Remove
3358	9	Black Walnut	*Juglans nigra*		Remove
3359	15	Green Ash	*Fraxinus pennsylvanica*		Remove
3360	10,7	Green Ash	*Fraxinus pennsylvanica*		Remove
3361	6	American Elm	*Ulmus americana*		Remove
3362	7	Green Ash	*Fraxinus pennsylvanica*		Remove
3363	7	American Elm	*Ulmus americana*		Remove
3364	9	Green Ash	*Fraxinus pennsylvanica*		Remove
3365	11	Butternut	*Juglans cinerea*	70% dead, full of cankers	Remove
3366	4	Red Cedar	*Juniperus virginiana*	20' in height	Remove
3367	5	Red Cedar	*Juniperus virginiana*	25' in height	Remove
3368	5	Red Cedar	*Juniperus virginiana*	25' in height	Remove
3369	5	Red Cedar	*Juniperus virginiana*	25' in height	Remove
3370	5	White Spruce	*Picea glauca*	in very poor health	Remove
3371	5	Red Cedar	*Juniperus virginiana*	25' in height	Remove
3372	4	Red Cedar	*Juniperus virginiana*	20' in height	Remove
3373	11	Norway Maple	*Acer platanoides*		Remove
3374	13	Norway Maple	*Acer platanoides*		Remove
3375	6	White Oak	*Quercus alba*		Remove
3376	8	Hackberry	*Celtis occidentalis*		Save
3377	20	Cottonwood	*Populus deltoides*		Save
3378	9	American Elm	*Ulmus americana*		Off-site
3379	11	Box Elder	*Acer negundo*		Off-site
3380	8	American Elm	*Ulmus americana*		Off-site
3381	6	Green Ash	*Fraxinus pennsylvanica*		Off-site
3382	6	American Elm	*Ulmus americana*		Save
3383	14,12	American Elm	*Ulmus americana*		Save
3384	9	Red Pine	*Pinus resinosa*		Save
3385	7	Red Pine	*Pinus resinosa*		Save
3386	5	Red Pine	*Pinus resinosa*	20' in height	Save
3387	7	Red Pine	*Pinus resinosa*		Save
3388	10	Red Pine	*Pinus resinosa*		Save
3389	11	Red Pine	*Pinus resinosa*		Save
3390	9	Red Pine	*Pinus resinosa*		Save
3391	8	Red Pine	*Pinus resinosa*		Save
3392	9	Red Pine	*Pinus resinosa*		Save
3393	8	White Spruce	*Picea glauca*		Save
3394	13	White Spruce	*Picea glauca*		Save
3395	12	White Spruce	*Picea glauca*		Save
3396	7	Black Walnut	*Juglans nigra*		Save
3397	7	Colorado Blue Spruce	*Picea pungens*		Save
3398	11	Colorado Blue Spruce	*Picea pungens*		Save
3399	6	White Spruce	*Picea glauca*		Save
3400	8	White Spruce	*Picea glauca*		Save
3401	7	Red Pine	*Pinus resinosa*		Save
3402	8	White Spruce	*Picea glauca*		Save
3403	11	American Elm	*Ulmus americana*		Save
3404	5	Red Pine	*Pinus resinosa*	25' in height	Save
3405	6	Red Pine	*Pinus resinosa*		Save
3406	7	American Elm	*Ulmus americana*		Save
3407	9	Red Pine	*Pinus resinosa*		Save
3408	6	Red Pine	*Pinus resinosa*		Save
3409	7	Red Pine	*Pinus resinosa*		Save
3410	8	Red Pine	*Pinus resinosa*		Save
3411	8	Red Pine	*Pinus resinosa*		Save
3412	6	Red Pine	*Pinus resinosa*		Save
3413	6	Red Pine	*Pinus resinosa*		Save
3414	4	Red Cedar	*Juniperus virginiana*	20' in height	Save
3415	4	Red Pine	*Pinus resinosa*	20' in height	Save
3417	6	Red Cedar	*Juniperus virginiana*		Save
3418	4	Red Cedar	*Juniperus virginiana*	20' in height	Save
3420	5	Red Pine	*Pinus resinosa*	25' in height	Save
3421	4	Red Pine	*Pinus resinosa*	25' in height	Save
3422	9	Red Pine	*Pinus resinosa*		Save
3423	7	Red Pine	*Pinus resinosa*		Save
3424	4	White Spruce	*Picea glauca*	15' in height	Save
3425	8	White Spruce	*Picea glauca*		Save
3426	7	White Spruce	*Picea glauca*		Save
3427	8	White Spruce	*Picea glauca*		Save
3428	6	Red Pine	*Pinus resinosa*		Save
3429	8	American Elm	*Ulmus americana*		Save
3430	9	Red Cedar	*Juniperus virginiana*		Save
3431	5	White Spruce	*Picea glauca*	20' in height	Save
3432	8	White Spruce	*Picea glauca*		Save
3433	8	White Spruce	*Picea glauca*		Save
3434	7	White Spruce	*Picea glauca*		Save
3435	6	White Spruce	*Picea glauca*		Save
3436	5	Colorado Blue Spruce	*Picea pungens*	15' in height	Save
3437	5	Red Cedar	*Juniperus virginiana*	25' in height	Save
3438	3	Red Pine	*Pinus resinosa*	10' in height	Save
3439	3	Red Pine	*Pinus resinosa*	10' in height	Save
3440	6	Red Cedar	*Juniperus virginiana*		Save
3441	5	Red Pine	*Pinus resinosa*	20' in height	Save
3442	4	Red Pine	*Pinus resinosa*	20' in height	Save
3443	5	White Spruce	*Picea glauca*	20' in height	Save
3444	5	Red Pine	*Pinus resinosa*	20' in height	Save
3445	7	White Spruce	*Picea glauca*		Save
3446	10	Red Pine	*Pinus resinosa*		Save
3447	6	Red Pine	*Pinus resinosa*		Save
3448	6	Crabapple	*Malus sp.*		Save
3449	9	Red Pine	*Pinus resinosa*		Save
3450	6,6	Crabapple	*Malus sp.*		Save
3451	3	Red Pine	*Pinus resinosa*	15' in height	Save
3452	8	Colorado Blue Spruce	*Picea pungens*		Save
3453	10	Box Elder	*Acer negundo*		Save
3454	11	Silver Maple	*Acer saccharinum*		Save
3455	14,11	Silver Maple	*Acer saccharinum*		Save
3456	14	Silver Maple	*Acer saccharinum*		Save
3457	13	Silver Maple	*Acer saccharinum*		Save
3458	13	American Elm	*Ulmus americana*		Save
3459	13	American Elm	*Ulmus americana*		Save
3460	9	Norway Maple	*Acer platanoides*		Save
3461	10	Norway Maple	*Acer platanoides*		Save
3462	10	Norway Maple	*Acer platanoides*	major decay along trunk	Save
3463	7	Norway Maple	*Acer platanoides*		Save
3464	9,7,6	Crabapple	*Malus sp.*		Save
3465	10,9,9	Crabapple	*Malus sp.*		Save
3466	13	Red Pine	*Pinus resinosa*		Save
3467	10	Red Pine	*Pinus resinosa*		Save
3468	13	Red Pine	*Pinus resinosa*		Save
3469	9	Red Pine	*Pinus resinosa*		Save
3470	13,8	Red Pine	*Pinus resinosa*		Save
3471	6	Red Pine	*Pinus resinosa*		Save
3472	9	Red Pine	*Pinus resinosa*		Save
3473	14	Red Pine	*Pinus resinosa*		Save
3474	10	Red Pine	*Pinus resinosa*		Save
3475	11	Red Pine	*Pinus resinosa*		Save
3476	11	Red Pine	*Pinus resinosa*		Save
3477	13	Red Pine	*Pinus resinosa*		Remove
3478	9	Red Pine	*Pinus resinosa*		Remove
3479	16	Red Pine	*Pinus resinosa*		Remove
3480	7	Red Pine	*Pinus resinosa*		Remove
3481	7,6	Crabapple	*Malus sp.*		Remove
3482	11	Red Pine	*Pinus resinosa*		Remove
3483	11	Red Pine	*Pinus resinosa*		Remove
3484	9	Red Pine	*Pinus resinosa*		Remove
3485	6	Red Pine	*Pinus resinosa*		Remove
3486	18	American Elm	*Ulmus americana*		Remove
3487	9	Red Pine	*Pinus resinosa*		Remove
3488	6	Black Walnut	*Juglans nigra*		Remove
3489	6	Red Pine	*Pinus resinosa*		Remove
3490	11	Norway Maple	*Acer platanoides*		Remove
3491	13	Norway Maple	*Acer platanoides*		Save
3492	7	American Elm	*Ulmus americana*		Save
3493	12	Green Ash	*Fraxinus pennsylvanica*		Remove
3494	7	Green Ash	*Fraxinus pennsylvanica*		Remove
3495	60	Cottonwood	*Populus deltoides*		Remove
3496	16	White Spruce	*Picea glauca*		Remove
3497	11,8,8,6,6,6	Crabapple	*Malus sp.*		Save
3498	6	Hackberry	*Celtis occidentalis*		Remove
3499	22	Sugar Maple	*Acer saccharum*		Remove
3500	8,8,7	Crabapple	*Malus sp.*		Remove
3501	9	Crabapple	*Malus sp.*		Remove
3502	10,6	Crabapple	*Malus sp.*		Remove
3503	20	Apple	*Malus* sp.	50% top dead	Remove
3504	6	Crabapple	*Malus sp.*		Remove
3505	8	Crabapple	*Malus sp.*		Remove
3506	9	Crabapple	*Malus sp.*		Remove
3507	10	Crabapple	*Malus sp.*		Remove
3508	9,8	Crabapple	*Malus sp.*		Remove
3509	8	Crabapple	*Malus sp.*		Remove
3510	7	Box Elder	*Acer negundo*		Remove
3511	16	Black Walnut	*Juglans nigra*		Remove
3512	9,6,6	Crabapple	*Malus sp.*		Remove
3513	15	Green Ash	*Fraxinus pennsylvanica*		Remove
3514	14	Green Ash	*Fraxinus pennsylvanica*		Remove
3515	17	Green Ash	*Fraxinus pennsylvanica*	major decay along trunk	Remove
3516	12	Box Elder	*Acer negundo*		Save
3517	9	Box Elder	*Acer negundo*		Save
3518	8	Box Elder	*Acer negundo*		Save
3519	16,16,15	Butternut	*Juglans cinerea*	80% dead, full of cankers	Save
3520	10	Red Oak	*Quercus rubra*		Remove
3521	10	Red Oak	*Quercus rubra*		Remove
3522	11	Red Oak	*Quercus rubra*		Remove
3523	12	Red Oak	*Quercus rubra*		Remove
3524	8	Red Cedar	*Juniperus virginiana*		Save
3525	13	Crabapple	*Malus sp.*		Save
3526	16	Silver Maple	*Acer saccharinum*		Save
3527	19	Box Elder	*Acer negundo*		Save
3528	8	Butternut	*Juglans cinerea*	in decline, full of cankers	Save
3529	6	American Elm	*Ulmus americana*		Save
3530	8	Mulbery	*Morus* sp.	decay at base	Save
3531	15	Green Ash	*Fraxinus pennsylvanica*		Save
3532	7	American Elm	*Ulmus americana*		Save
3533	8	Green Ash	*Fraxinus pennsylvanica*		Save
3534	6	Green Ash	*Fraxinus pennsylvanica*		Save
3535	17	Green Ash	*Fraxinus pennsylvanica*		Save
3536	17	Sugar Maple	*Acer saccharum*		Remove
3537	11	Black Walnut	*Juglans nigra*		Remove
3538	11	Black Walnut	*Juglans nigra*		Save
3539	12,6	Black Walnut	*Juglans nigra*		Save
3540	10	Black Walnut	*Juglans nigra*		Save
3541	7	Black Walnut	*Juglans nigra*		Save
3542	10	Crabapple	*Malus sp.*	major decay along trunk	Remove
3543	15	Mulbery	*Morus* sp.		Save
3544	20,15	American Elm	*Ulmus americana*		Save
3545	11,7	Crabapple	*Malus sp.*		Save
3546	6	American Elm	*Ulmus americana*		Save
3547	8	American Elm	*Ulmus americana*		Save
3548	6	Green Ash	*Fraxinus pennsylvanica*		Save
3549	10	Green Ash	*Fraxinus pennsylvanica*		Save
3550	9	Green Ash	*Fraxinus pennsylvanica*		Save
3551	6	American Elm	*Ulmus americana*		Save
3552	8	Green Ash	*Fraxinus pennsylvanica*		Save
3553	7	Sugar Maple	*Acer saccharum*		Save
3554	11	Hackberry	*Celtis occidentalis*		Save
3555	8	American Elm	*Ulmus americana*		Save
3556	8	American Elm	*Ulmus americana*		Save
3557	10	American Elm	*Ulmus americana*		Save
3558	6	American Elm	*Ulmus americana*		Save
3559	8	American Elm	*Ulmus americana*		Save
3560	15,12	Silver Maple	*Acer saccharinum*		Save
3561	6	American Elm	*Ulmus americana*		Save
3562	25	Bur Oak	*Quercus macrocarpa*	decay at base	Save
3563	10	American Elm	*Ulmus americana*		Save
3564	10	Green Ash	*Fraxinus pennsylvanica*		Save
3565	10,8	Sugar Maple	*Acer saccharum*		Save
3566	6	Sugar Maple	*Acer saccharum*		Save
3567	11	Sugar Maple	*Acer saccharum*		Save
3568	7	Sugar Maple	*Acer saccharum*		Save
3569	6	Sugar Maple	*Acer saccharum*		Save
3570	13,6	American Elm	*Ulmus americana*		Save
3571	10	Hackberry	*Celtis occidentalis*		Save
3572	6	Sugar Maple	*Acer saccharum*		Save
3573	7	Sugar Maple	*Acer saccharum*		Save
3574	7	Sugar Maple	*Acer saccharum*		Save
3575	6	Sugar Maple	*Acer saccharum*		Save
3576	7	Sugar Maple	*Acer saccharum*		Save
3577	6	American Elm	*Ulmus americana*		Save
3578	7,6	American Elm	*Ulmus americana*		Save
3579	7	American Elm	*Ulmus americana*		Save
3580	7	American Elm	*Ulmus americana*		Save
3581	11	American Elm	*Ulmus americana*		Save
3582	6	Sugar Maple	*Acer saccharum*		Save
3583	8	American Elm	*Ulmus americana*		Save
3584	29	Sugar Maple	*Acer saccharum*	major decay along trunk	Save
3585	7	Hackberry	*Celtis occidentalis*		Save
3586	6	Box Elder	*Acer negundo*		Save
3587	10	Hackberry	*Celtis occidentalis*		Save
3588	6	Hackberry	*Celtis occidentalis*		Save
3589	11	American Elm	*Ulmus americana*		Save
3590	7	Sugar Maple	*Acer saccharum*		Save
3591	23,18	Cottonwood	*Populus deltoides*		Save
3592	14	Black Walnut	*Juglans nigra*		Save
3593	7	American Elm	*Ulmus americana*		Save
3594	7	Sugar Maple	*Acer saccharum*		Save
3595	15	Red Cedar	*Juniperus virginiana*		Save
3596	10	American Elm	*Ulmus americana*		Save
3597	16	Red Cedar	*Juniperus virginiana*		Save
3598	10	Basswood	*Tilia americana*		Save
3599	10	Red Cedar	*Juniperus virginiana*		Save
3600	16	Red Cedar	*Juniperus virginiana*		Save
3601	7	Bur Oak	*Quercus macrocarpa*		Save
3602	8	Bur Oak	*Quercus macrocarpa*		Save
3603	8	American Elm	*Ulmus americana*		Save
3604	14	Hackberry	*Celtis occidentalis*		Save
3605	10	Box Elder	*Acer negundo*		Save
3606	8	American Elm	*Ulmus americana*		Save
3607	10	Red Oak	*Quercus rubra*		Save
3608	8	American Elm	*Ulmus americana*		Save
3609	6	Hackberry	*Celtis occidentalis*		Save
3610	6	Basswood	*Tilia americana*		Save
3611	7	Sugar Maple	*Acer saccharum*		Save
3612	10	American Elm	*Ulmus americana*		Save
3613	9	American Elm	*Ulmus americana*		Save
3614	6	American Elm	*Ulmus americana*		Save
3615	18	Silver Maple	*Acer saccharinum*		Save
3616	18	Silver Maple	*Acer saccharinum*		Save
3617	11	Silver Maple	*Acer saccharinum*		Save

PIONEER engineering
CIVIL ENGINEERS LAND PLANNERS LAND SURVEYORS LANDSCAPE ARCHITECTS
2422 Enterprise Drive
Mendota Heights, MN 55120
(651) 681-1914
Fax: 681-9488
www.pioneereng.com

© 2022 Pioneer Engineering, P.A.

I hereby certify that this plan was prepared by me or under my direct supervision and that I am a duly Licensed Landscape Architect under the laws of the State of Minnesota
Name Jennifer L. Thompson
Reg. No. 44763 Date 5-3-2022

Revisions

Date 05-03-2022
Designed TLM
Drawn TLM

TREE PRESERVATION

JOHNSON - REILAND
616 HIGHWAY 3
DUNDAS, MINNESOTA 55019

ENSCONCED WOODS
CHASKA, MINNESOTA

01-PLAN-120158-SHEET-TREE.DWG

T3 OF 6

Tag #	DBH	Common Name	Scientific Name	Notes	Status
3618	15,13,9	Silver Maple	*Acer saccharinum*		Save
3619	15,8	Silver Maple	*Acer saccharinum*		Save
3620	12,8	Silver Maple	*Acer saccharinum*		Save
3621	16	American Elm	*Ulmus americana*		Save
3622	8	Silver Maple	*Acer saccharinum*		Save
3623	14	Silver Maple	*Acer saccharinum*		Save
3624	6	Basswood	*Tilia americana*		Save
3625	12	Silver Maple	*Acer saccharinum*		Save
3626	7	Silver Maple	*Acer saccharinum*		Save
3627	11	Silver Maple	*Acer saccharinum*		Save
3628	20	Silver Maple	*Acer saccharinum*		Save
3629	11	American Elm	*Ulmus americana*		Save
3630	6	American Elm	*Ulmus americana*		Save
3631	6	Sugar Maple	*Acer saccharum*		Save
3632	7	Sugar Maple	*Acer saccharum*		Save
3633	12	Red Oak	*Quercus rubra*		Save
3634	8	Red Oak	*Quercus rubra*		Save
3635	9	Red Oak	*Quercus rubra*		Save
3636	7	Green Ash	*Fraxinus pennsylvanica*		Save
3637	9	Green Ash	*Fraxinus pennsylvanica*		Remove
3638	15	Green Ash	*Fraxinus pennsylvanica*		Remove
3639	14	Green Ash	*Fraxinus pennsylvanica*		Save
3640	10	Box Elder	*Acer negundo*		Save
3641	15	Box Elder	*Acer negundo*		Save
3642	8	Red Pine	*Pinus resinosa*		Remove
3643	10	Box Elder	*Acer negundo*		Remove
3644	11	Box Elder	*Acer negundo*		Remove
3645	15	Quaking Aspen	*Populus tremuloides*		Save
3646	13	Quaking Aspen	*Populus tremuloides*	decay at base	Remove
3647	11	American Elm	*Ulmus americana*		Save
3648	7	Basswood	*Tilia americana*		Save
3649	13,12,11	Paper Birch	*Betula papyrifera*		Save
3650	8,6	Bur Oak	*Quercus macrocarpa*		Save
3651	16	Red Oak	*Quercus rubra*		Save
3652	9	Bur Oak	*Quercus macrocarpa*		Save
3653	65	Weeping Willow	*Salix babylonica*	25% broken top	Save
3654	12,10,6	Whitecrack Willow	*Salix x rubens*	double tagged with 3655	Save
3656	8,6	Whitecrack Willow	*Salix x rubens*		Save
3657	13,12,9	Whitecrack Willow	*Salix x rubens*		Save
3658	10,8	Whitecrack Willow	*Salix x rubens*		Save
3659	6	Whitecrack Willow	*Salix x rubens*		Save
3660	20,6	Whitecrack Willow	*Salix x rubens*		Save
3661	14	Whitecrack Willow	*Salix x rubens*		Remove
3662	6	Red Cedar	*Juniperus virginiana*		Remove
3663	4	Red Cedar	*Juniperus virginiana*	20' in height	Remove
3664	23	Bur Oak	*Quercus macrocarpa*		Remove
3665	6	Red Cedar	*Juniperus virginiana*		Remove
3666	12	Red Cedar	*Juniperus virginiana*		Remove
3667	11	Red Cedar	*Juniperus virginiana*		Remove
3668	12	Red Cedar	*Juniperus virginiana*		REmove
3669	14	Red Cedar	*Juniperus virginiana*		Save
3670	18	Red Cedar	*Juniperus virginiana*		Remove
3671	7	Red Cedar	*Juniperus virginiana*		Remove
3672	10,5	Red Cedar	*Juniperus virginiana*		Remove
3673	23	Bur Oak	*Quercus macrocarpa*		Remove
3674	25	Bur Oak	*Quercus macrocarpa*		Remove
3675	18	Quaking Aspen	*Populus tremuloides*	decay at base	Save
3676	16	American Elm	*Ulmus americana*		Save
3677	6	Red Pine	*Pinus resinosa*		Save
3678	6	Red Pine	*Pinus resinosa*		Save
3679	6	Red Pine	*Pinus resinosa*		Save
3680	3	Red Pine	*Pinus resinosa*	25' in height	Save
3681	4	Red Pine	*Pinus resinosa*	25' in height	Save
3682	12	American Elm	*Ulmus americana*		Save
3683	16	American Elm	*Ulmus americana*		Save
3684	8	Red Pine	*Pinus resinosa*		Remove
3685	11	Box Elder	*Acer negundo*		Remove
3686	4	Red Pine	*Pinus resinosa*	25' in height	Remove
3687	8	Red Cedar	*Juniperus virginiana*		Remove
3688	4	Red Cedar	*Juniperus virginiana*	20' in height	Remove
3689	5	Red Cedar	*Juniperus virginiana*	20' in height	Remove
3690	3	Red Cedar	*Juniperus virginiana*	20' in height	Remove
3691	3	Red Cedar	*Juniperus virginiana*	20' in height	Remove
3692	25	Bur Oak	*Quercus macrocarpa*		Remove
3693	13	Red Cedar	*Juniperus virginiana*		Remove
3694	6	Hackberry	*Celtis occidentalis*		Remove
3695	7	American Elm	*Ulmus americana*		Remove
3696	10	Red Oak	*Quercus rubra*		Remove
3697	8	Red Oak	*Quercus rubra*		Remove
3698	13	Red Oak	*Quercus rubra*		Remove
3699	6	Sugar Maple	*Acer saccharum*		Remove
3700	6	Red Oak	*Quercus rubra*		Remove
3701	23	Cottonwood	*Populus deltoides*		Remove
3702	18,17	Siberian Elm	*Ulmus pumila*		Remove
3703	9	American Elm	*Ulmus americana*		Remove
3704	7	Red Cedar	*Juniperus virginiana*		Remove
3705	6	Red Pine	*Pinus resinosa*		Remove
3706	6	Red Cedar	*Juniperus virginiana*		Remove
3707	5	Red Pine	*Pinus resinosa*	25' in height	Remove
3708	4	Red Pine	*Pinus resinosa*	20' in height	Remove
3709	6	Red Pine	*Pinus resinosa*		Remove
3710	9	Red Pine	*Pinus resinosa*		Remove
3711	6	Silver Maple	*Acer saccharinum*		Remove
3712	9	Red Pine	*Pinus resinosa*		Remove
3713	10	Box Elder	*Acer negundo*		Remove
3714	8	American Elm	*Ulmus americana*		Remove
3715	6	Bur Oak	*Quercus macrocarpa*		Remove

Tag #	DBH	Common Name	Scientific Name	Notes	Status
3716	13	American Elm	*Ulmus americana*		Remove
3717	15	Quaking Aspen	*Populus tremuloides*	major decay along trunk	Remove
3718	15	Silver Maple	*Acer saccharinum*		Remove
3719	9	Silver Maple	*Acer saccharinum*		Remove
3720	13	Silver Maple	*Acer saccharinum*		Remove
3721	6	Silver Maple	*Acer saccharinum*		Remove
3722	15,15	Whitecrack Willow	*Salix x rubens*	major decay along trunk	Remove
3723	11,11,7,7	Whitecrack Willow	*Salix x rubens*		Save
3724	13,12,6	Whitecrack Willow	*Salix x rubens*		Save
3725	10,9	Whitecrack Willow	*Salix x rubens*		Save
3726	13,13,9,7	Whitecrack Willow	*Salix x rubens*	one 13" trunk is dead	Save
3727	18,16,15,15	Whitecrack Willow	*Salix x rubens*	major decay at base	Save
3728	7	American Elm	*Ulmus americana*		Save
3729	15,12	Whitecrack Willow	*Salix x rubens*		Save
3730	8	Silver Maple	*Acer saccharinum*		Remove
3731	6	Silver Maple	*Acer saccharinum*		Remove
3732	11,9	Whitecrack Willow	*Salix x rubens*		Remove
3733	6	Silver Maple	*Acer saccharinum*		Remove
3734	6	Basswood	*Tilia americana*		Remove
3735	10	Basswood	*Tilia americana*		Remove
3736	7	Basswood	*Tilia americana*		Remove
3737	7	American Elm	*Ulmus americana*	50% top dead	Remove
3738	12	Green Ash	*Fraxinus pennsylvanica*		Remove
3739	20	Siberian Elm	*Ulmus pumila*		Remove
3740	10	American Elm	*Ulmus americana*		Remove
3741	12	Box Elder	*Acer negundo*		Remove
3742	8	Red Oak	*Quercus rubra*		Remove
3743	11	Green Ash	*Fraxinus pennsylvanica*		Remove
3744	7	Green Ash	*Fraxinus pennsylvanica*		Remove
3745	12	Hackberry	*Celtis occidentalis*		Remove
3746	12,4	Red Cedar	*Juniperus virginiana*		Remove
3747	6	American Elm	*Ulmus americana*		Remove
3748	13	Red Oak	*Quercus rubra*		Remove
3749	7	Red Oak	*Quercus rubra*		Remove
3750	9	Red Cedar	*Juniperus virginiana*		Remove
3751	32	Red Oak	*Quercus rubra*		Remove
3752	6	Red Oak	*Quercus rubra*		Remove
3753	15	Red Cedar	*Juniperus virginiana*		Remove
3754	8	Butternut	*Juglans cinerea*	in decline, full of cankers	Remove
3755	6	Red Oak	*Quercus rubra*		Remove
3756	8	Sugar Maple	*Acer saccharum*		Remove
3757	12	American Elm	*Ulmus americana*		Remove
3758	26	Bur Oak	*Quercus macrocarpa*		Remove
3759	14	Hackberry	*Celtis occidentalis*		Remove
3760	6	Sugar Maple	*Acer saccharum*		Remove
3761	13	Red Oak	*Quercus rubra*		Remove
3762	6	Red Oak	*Quercus rubra*		Remove
3763	6	Hackberry	*Celtis occidentalis*		Remove
3764	7	Box Elder	*Acer negundo*		Remove
3765	8	Sugar Maple	*Acer saccharum*		Remove
3766	9	Sugar Maple	*Acer saccharum*		Remove
3767	7	Sugar Maple	*Acer saccharum*		Remove
3768	8	Sugar Maple	*Acer saccharum*		Remove
3769	12	Sugar Maple	*Acer saccharum*		Remove
3770	13	Red Oak	*Quercus rubra*		Remove
3771	12	Red Oak	*Quercus rubra*		Remove
3772	12	Red Oak	*Quercus rubra*		Remove
3773	7	Red Oak	*Quercus rubra*		Remove
3774	10	American Elm	*Ulmus americana*		Remove
3775	6	Red Oak	*Quercus rubra*		Remove
3776	6	American Elm	*Ulmus americana*		Remove
3777	6	Red Oak	*Quercus rubra*		Remove
3778	6	Red Oak	*Quercus rubra*		Remove
3779	6	Red Oak	*Quercus rubra*		Remove
3780	8	Red Oak	*Quercus rubra*		Remove
3781	7	Basswood	*Tilia americana*		Remove
3782	7	Red Oak	*Quercus rubra*		Remove
3783	8	American Elm	*Ulmus americana*		Remove
3784	6	Red Oak	*Quercus rubra*		Remove
3785	8	American Elm	*Ulmus americana*		Remove
3786	10	Box Elder	*Acer negundo*		Remove
3787	13	American Elm	*Ulmus americana*		Remove
3787	17	Box Elder	*Acer negundo*		Remove
3788	16	Red Oak	*Quercus rubra*		Remove
3790	9	Box Elder	*Acer negundo*		Remove
3791	13	Red Oak	*Quercus rubra*		Remove
3792	19	Box Elder	*Acer negundo*		Remove
3794	28	Sugar Maple	*Acer saccharum*	decay at base	Remove
3795	32	Red Oak	*Quercus rubra*		Remove
3796	11	American Elm	*Ulmus americana*		Remove
3797	10	Red Oak	*Quercus rubra*		Remove
3798	7	Sugar Maple	*Acer saccharum*		Remove
3799	7	Red Oak	*Quercus rubra*		Remove
3800	6	Sugar Maple	*Acer saccharum*		Remove
3801	6	American Elm	*Ulmus americana*		Remove
3802	7	American Elm	*Ulmus americana*		Remove
3803	14	Red Oak	*Quercus rubra*		Remove
3804	6	Red Oak	*Quercus rubra*		Remove
3805	9	Red Oak	*Quercus rubra*		Remove
3806	9	Red Oak	*Quercus rubra*		Remove
3807	10	Red Oak	*Quercus rubra*		Remove
3808	7	Red Oak	*Quercus rubra*		Remove
3809	8	American Elm	*Ulmus americana*		Remove
3810	16,10	Box Elder	*Acer negundo*		Remove
3811	16,7	Box Elder	*Acer negundo*		Remove
3812	8	Box Elder	*Acer negundo*		Remove
3813	14	American Elm	*Ulmus americana*		Remove

Tag #	DBH	Common Name	Scientific Name	Notes	Status
3814	7	American Elm	*Ulmus americana*		Remove
3815	7	Box Elder	*Acer negundo*		Remove
3816	10	Box Elder	*Acer negundo*		Remove
3817	10	American Elm	*Ulmus americana*	in decline	Remove
3818	8	Hackberry	*Celtis occidentalis*		Remove
3819	8	Sugar Maple	*Acer saccharum*		Remove
3820	7	Hackberry	*Celtis occidentalis*		Remove
3821	6	Sugar Maple	*Acer saccharum*		Remove
3822	7	Sugar Maple	*Acer saccharum*		Remove
3823	18	American Elm	*Ulmus americana*	dead	Remove
3824	8	Sugar Maple	*Acer saccharum*		Remove
3825	7	Hackberry	*Celtis occidentalis*		Remove
3826	6	Sugar Maple	*Acer saccharum*		Remove
3827	13,11,9	Box Elder	*Acer negundo*		Remove
3828	17,16,15,13	Box Elder	*Acer negundo*		Remove
3829	7,6,6	Apple	*Malus* sp.		Remove
3830	16,11	Box Elder	*Acer negundo*		Remove
3831	13,11	Box Elder	*Acer negundo*	very poor form	Remove
3832	21	Black Cherry	*Prunus serotina*		Remove
3833	9,7,6	Box Elder	*Acer negundo*		Remove
3834	11	American Elm	*Ulmus americana*		Remove
3835	20	Box Elder	*Acer negundo*		Remove
3836	8	Black Cherry	*Prunus serotina*		Remove
3837	16	Black Cherry	*Prunus serotina*		Remove
3838	7	American Elm	*Ulmus americana*		Remove
3839	11	American Elm	*Ulmus americana*		Remove
3840	13	Box Elder	*Acer negundo*		Remove
3841	15,14	Box Elder	*Acer negundo*		Remove
3842	14,8	Box Elder	*Acer negundo*	14" trunk is dead	Remove
3843	13	Box Elder	*Acer negundo*		Remove
3844	16,15	Box Elder	*Acer negundo*		Remove
3845	14	Box Elder	*Acer negundo*		Remove
3846	13	Box Elder	*Acer negundo*		Remove
3847	16	Box Elder	*Acer negundo*		Remove
3848	14,13,13,12,7	American Elm	*Ulmus americana*		Remove
3849	7	American Elm	*Ulmus americana*		Remove
3850	11,11	Box Elder	*Acer negundo*		Remove
3851	6	Box Elder	*Acer negundo*		Remove
3852	7	Box Elder	*Acer negundo*		Remove
3853	6	Box Elder	*Acer negundo*		Remove
3854	7	Box Elder	*Acer negundo*		Remove
3855	16	Box Elder	*Acer negundo*		Remove
3856	7	Black Walnut	*Juglans nigra*		Remove
3857	17	Box Elder	*Acer negundo*		Remove
3858	22	Box Elder	*Acer negundo*		Remove
3859	22	Box Elder	*Acer negundo*		Remove
3860	22,22	Box Elder	*Acer negundo*	major decay along trunk	Remove
3861	18	Box Elder	*Acer negundo*		Remove
3862	15	Box Elder	*Acer negundo*		Remove
3863	16,11	Box Elder	*Acer negundo*		Remove
3864	18,16	Box Elder	*Acer negundo*		Remove
3865	17	Box Elder	*Acer negundo*		Remove
3866	15,11,9	Box Elder	*Acer negundo*		Remove
3867	15	Box Elder	*Acer negundo*		Remove
3868	14	Box Elder	*Acer negundo*		Remove
3869	19	Box Elder	*Acer negundo*		Remove
3870	18	Box Elder	*Acer negundo*		Remove
3871	13,11	Box Elder	*Acer negundo*	decay along trunk	Remove
3872	18	Box Elder	*Acer negundo*	hollow along trunk	Remove
3873	17,14	Box Elder	*Acer negundo*		Remove
3874	18	Box Elder	*Acer negundo*	major limb torn along trunk	Remove
3875	11	Box Elder	*Acer negundo*		Remove
3876	8,7	Box Elder	*Acer negundo*		Remove
3877	8	Box Elder	*Acer negundo*		Remove
3878	10	Black Walnut	*Juglans nigra*		Remove
3879	6	Box Elder	*Acer negundo*		Remove
3880	7	Black Walnut	*Juglans nigra*		Remove
3881	19,13	American Elm	*Ulmus americana*		Remove
3882	6	Black Walnut	*Juglans nigra*		Remove
3883	9	Black Walnut	*Juglans nigra*		Remove
3884	6	Box Elder	*Acer negundo*		Remove
3885	6	Black Walnut	*Juglans nigra*		Remove
3886	12	Black Walnut	*Juglans nigra*		Remove
3887	18	Norway Maple	*Acer platanoides*	major decay at base	Remove
3888	11,9	Black Walnut	*Juglans nigra*		Remove
3890	18	Balsam Fir	*Abies balsamea*	lower 2/3 no needles	Remove
3891	8	Box Elder	*Acer negundo*		Remove
3892	8	Box Elder	*Acer negundo*		Remove
3893	8	Mulbery	*Morus* sp.		Remove
3894	9	Black Walnut	*Juglans nigra*		Remove
3895	6	Black Walnut	*Juglans nigra*		Remove
3896	8	Black Walnut	*Juglans nigra*		Remove
3897	18	Box Elder	*Acer negundo*		Remove
3898	18	Box Elder	*Acer negundo*		Remove
3899	19	Box Elder	*Acer negundo*		Remove
3900	16	Box Elder	*Acer negundo*	in poor health	Remove
3901	12	Black Walnut	*Juglans nigra*		Remove
3902	9	Black Walnut	*Juglans nigra*		Remove
3903	16	Box Elder	*Acer negundo*		Remove
3904	9	Box Elder	*Acer negundo*		Remove
3905	12	Black Walnut	*Juglans nigra*		Remove
3906	6	Black Walnut	*Juglans nigra*		Remove
3907	14	White Spruce	*Picea glauca*	lower 2/3 no needles	Remove
3908	16	White Spruce	*Picea glauca*	lower 2/3 no needles	Remove
3909	10	Black Walnut	*Juglans nigra*		Remove
3910	16	Austrian Pine	*Pinus nigra*	lower 3/4 no needles	Remove
3911	16,15	American Elm	*Ulmus americana*		Remove
3912	6	Crabapple	*Malus sp.*		Remove

Tag #	DBH	Common Name	Scientific Name	Notes	Status
3913	9	Black Walnut	*Juglans nigra*		Remove
3914	8	Box Elder	*Acer negundo*		Remove
3915	7	Black Walnut	*Juglans nigra*		Remove
3916	6	Black Walnut	*Juglans nigra*		Remove
3917	10,6	Whitecrack Willow	*Salix x rubens*		Save
3918	20	American Elm	*Ulmus americana*		Remove
3919	13	Box Elder	*Acer negundo*		Remove
3920	28	Cottonwood	*Populus deltoides*		Remove
3921	6	Box Elder	*Acer negundo*		Remove
3922	24	Cottonwood	*Populus deltoides*		Remove
3923	24	Cottonwood	*Populus deltoides*		Remove
3924	30	Cottonwood	*Populus deltoides*	1/2 top missing	Remove
3925	10	Box Elder	*Acer negundo*		Remove
3926	16	American Elm	*Ulmus americana*		Remove
3927	8	Black Walnut	*Juglans nigra*		Remove
3928	19,15	Box Elder	*Acer negundo*		Remove
3929	8	Black Walnut	*Juglans nigra*		Remove
3930	6	Green Ash	*Fraxinus pennsylvanica*		Remove
3931	6	Silver Maple	*Acer saccharinum*		Remove
3932	15	Silver Maple	*Acer saccharinum*		Remove
3933	21,21,18	Silver Maple	*Acer saccharinum*		Remove
3934	7	Green Ash	*Fraxinus pennsylvanica*		Remove
3935	9	Box Elder	*Acer negundo*		Remove
3936	9	Box Elder	*Acer negundo*		Remove
3937	14	Box Elder	*Acer negundo*		Remove
3938	9	American Elm	*Ulmus americana*		Save
3939	6	American Elm	*Ulmus americana*		Remove
3940	6	American Elm	*Ulmus americana*		Remove
3941	27	Cottonwood	*Populus deltoides*		Save
3942	6	American Elm	*Ulmus americana*		Save
3943	27	Cottonwood	*Populus deltoides*		Save
3944	6	American Elm	*Ulmus americana*		Save
3945	19	Cottonwood	*Populus deltoides*		Remove
3946	14	Cottonwood	*Populus deltoides*		Remove
3947	19	Cottonwood	*Populus deltoides*		Remove
3948	9	American Elm	*Ulmus americana*		Remove
3949	19	Cottonwood	*Populus deltoides*		Remove
3950	10	Cottonwood	*Populus deltoides*		Remove
3951	16	Cottonwood	*Populus deltoides*		Remove
3952	8	Green Ash	*Fraxinus pennsylvanica*		Remove
3953	12	Green Ash	*Fraxinus pennsylvanica*		Remove
3954	20,9,8	Cottonwood	*Populus deltoides*		Save
3955	8	American Elm	*Ulmus americana*		Save
3956	11	Cottonwood	*Populus deltoides*		Save
3957	26	Cottonwood	*Populus deltoides*		Save
3958	21	Cottonwood	*Populus deltoides*		Save
3959	17	Cottonwood	*Populus deltoides*		Save
3960	27	Bur Oak	*Quercus macrocarpa*		Remove
3961	6	American Elm	*Ulmus americana*		Remove
3962	28	Bur Oak	*Quercus macrocarpa*		Remove
3963	7	Green Ash	*Fraxinus pennsylvanica*		Remove
3964	8	Box Elder	*Acer negundo*		Remove
3965	9	Red Oak	*Quercus rubra*		Remove
3966	8	Red Oak	*Quercus rubra*		Remove
3967	11	Red Oak	*Quercus rubra*		Remove
3968	6	Red Oak	*Quercus rubra*	dead	Remove
3969	12	Box Elder	*Acer negundo*		Remove
3970	9	Hackberry	*Celtis occidentalis*		Remove
3971	7	American Elm	*Ulmus americana*		Remove
3972	15	Red Oak	*Quercus rubra*		Remove
3973	15	Red Oak	*Quercus rubra*		Remove
3974	9	Red Oak	*Quercus rubra*		Remove
3975	8	Box Elder	*Acer negundo*		Remove
3976	33	Bur Oak	*Quercus macrocarpa*		Remove
3977	10,9	Basswood	*Tilia americana*		Remove
3978	9	Box Elder	*Acer negundo*		Remove
3979	6	Sugar Maple	*Acer saccharum*		Remove
3980	12	Red Oak	*Quercus rubra*		Remove
3981	16	Red Oak	*Quercus rubra*		Remove
3982	7	Box Elder	*Acer negundo*		Remove
3983	7	Box Elder	*Acer negundo*		Remove
3984	15	Box Elder	*Acer negundo*		Remove
3985	7	American Elm	*Ulmus americana*		Remove
3986	18	Red Oak	*Quercus rubra*		Remove
3987	20	Red Oak	*Quercus rubra*		Remove
3988	9	Box Elder	*Acer negundo*		Remove
3989	20	Box Elder	*Acer negundo*		Remove
3990	14,6	Box Elder	*Acer negundo*		Remove
3991	9	Box Elder	*Acer negundo*		Remove
3992	11	Box Elder	*Acer negundo*		Remove
3993	14	Box Elder	*Acer negundo*		Remove
3994	21	Box Elder	*Acer negundo*	decay along trunk	Remove
3995	17,16	Box Elder	*Acer negundo*	both trunks growing on ground	Remove
3996	18	Box Elder	*Acer negundo*		Remove
3997	10	Box Elder	*Acer negundo*		Remove
3998	13	Box Elder	*Acer negundo*		Remove
3999	16,15,13,8	Box Elder	*Acer negundo*		Remove
4000	13	Box Elder	*Acer negundo*		Remove
4001	17	Box Elder	*Acer negundo*		Remove
4002	6	Black Walnut	*Juglans nigra*		Remove
4003	16,13	Box Elder	*Acer negundo*		Remove
4004	16	American Elm	*Ulmus americana*		Remove
4005	10	Box Elder	*Acer negundo*		Remove
4006	12	Box Elder	*Acer negundo*		Remove
4007	6	Box Elder	*Acer negundo*		Remove
4008	9	American Elm	*Ulmus americana*		Remove
4009	17,11	Box Elder	*Acer negundo*		Remove
4010	9	American Elm	*Ulmus americana*		Remove

01-PLAN-120158-SHEET-TREE.DWG

PIONEERengineering
CIVIL ENGINEERS LAND PLANNERS LAND SURVEYORS LANDSCAPE ARCHITECTS
2422 Enterprise Drive
Mendota Heights, MN 55120
(651) 681-1914
Fax: 681-9488
www.pioneereng.com

I hereby certify that this plan was prepared by me or under my direct supervision and that I am a duly Licensed Landscape Architect under the laws of the State of Minnesota

Name Jennifer L. Thompson
Reg. No. 44763 Date 5-3-2022

Revisions

Date 05-03-2022
Designed TLM
Drawn TLM
Checked JLT

TREE PRESERVATION

JOHNSON - REILAND
616 HIGHWAY 3
DUNDAS, MINNESOTA 55019

ENSCONCED WOODS
CHASKA, MINNESOTA

T4 OF 6

6.B. Recommend Approval of the Final
Page 55 of 59
© 2022 Pioneer Engineering, P.A.
Packet Page 136 of

Tag #	DBH	Common Name	Scientific Name	Notes	Status
4011	17,10	Box Elder	*Acer negundo*		Remove
4012	16	Box Elder	*Acer negundo*		Remove
4013	6	Green Ash	*Fraxinus pennsylvanica*	80% dead	Remove
4014	8	Box Elder	*Acer negundo*		Remove
4015	7	Box Elder	*Acer negundo*		Remove
4016	7	Box Elder	*Acer negundo*		Remove
4017	9	Box Elder	*Acer negundo*		Remove
4018	7	Box Elder	*Acer negundo*		Remove
4019	6	Box Elder	*Acer negundo*		Remove
4020	7	Box Elder	*Acer negundo*		Remove
4021	9	American Elm	*Ulmus americana*		Remove
4022	9	Box Elder	*Acer negundo*		Remove
4023	8	Box Elder	*Acer negundo*		Remove
4024	9	Box Elder	*Acer negundo*		Remove
4025	6	Box Elder	*Acer negundo*		Remove
4026	6	Box Elder	*Acer negundo*		Remove
4027	8,6	Box Elder	*Acer negundo*	poor form	Remove
4028	12	Green Ash	*Fraxinus pennsylvanica*		Remove
4029	7	American Elm	*Ulmus americana*		Remove
4030	12	Box Elder	*Acer negundo*		Remove
4031	8	Box Elder	*Acer negundo*		Remove
4032	6	Box Elder	*Acer negundo*		Remove
4033	11	Butternut	*Juglans cinerea*	some cankers present	Remove
4034	6	Sugar Maple	*Acer saccharum*		Remove
4035	9	American Elm	*Ulmus americana*		Remove
4036	12	Box Elder	*Acer negundo*		Remove
4037	13	Box Elder	*Acer negundo*		Remove
4038	16	Box Elder	*Acer negundo*		Remove
4039	11,7	Box Elder	*Acer negundo*		Remove
4040	6	Hackberry	*Celtis occidentalis*		Remove
4041	11	Red Oak	*Quercus rubra*		Save
4042	17,10	Box Elder	*Acer negundo*		Save
4043	5	Red Pine	*Pinus resinosa*	heavily shade suppressed	Save
4044	11	Red Pine	*Pinus resinosa*		Save
4045	6	Box Elder	*Acer negundo*		Save
4046	9	American Elm	*Ulmus americana*		Save
4047	6	Green Ash	*Fraxinus pennsylvanica*		Save
4048	6	Box Elder	*Acer negundo*		Save
4049	13,8	American Elm	*Ulmus americana*		Save
4050	6	Green Ash	*Fraxinus pennsylvanica*		Remove
4051	13	Box Elder	*Acer negundo*		Remove
4052	6	Box Elder	*Acer negundo*		Remove
4053	16,15	Box Elder	*Acer negundo*		Remove
4054	10	Box Elder	*Acer negundo*		Remove
4055	9	Box Elder	*Acer negundo*		Remove
4056	15	Box Elder	*Acer negundo*		Remove
4057	17	Box Elder	*Acer negundo*		Remove
4058	9	Box Elder	*Acer negundo*		Remove
4059	9	Box Elder	*Acer negundo*		Remove
4060	13,9	Box Elder	*Acer negundo*	13" trunk is broken 6' up	Remove
4061	10	Box Elder	*Acer negundo*		Remove
4062	10	Box Elder	*Acer negundo*		Remove
4063	10	Box Elder	*Acer negundo*		Remove
4064	9	American Elm	*Ulmus americana*		Remove
4065	8	Box Elder	*Acer negundo*		Remove
4066	9	Box Elder	*Acer negundo*		Remove
4067	8	Box Elder	*Acer negundo*		Remove
4068	12	Box Elder	*Acer negundo*		Remove
4069	15,10	Box Elder	*Acer negundo*		Remove
4070	13	Box Elder	*Acer negundo*		Remove
4071	11	Box Elder	*Acer negundo*		Remove
4072	17	Siberian Elm	*Ulmus pumila*		Remove
4073	10	Box Elder	*Acer negundo*		Remove
4074	6	Box Elder	*Acer negundo*		Remove
4075	9	American Elm	*Ulmus americana*		Remove
4076	6	Box Elder	*Acer negundo*		Remove
4077	7	Box Elder	*Acer negundo*		Remove
4078	9	Box Elder	*Acer negundo*		Remove
4079	9	Siberian Elm	*Ulmus pumila*		Remove
4080	7	Green Ash	*Fraxinus pennsylvanica*		Remove
4081	7	Box Elder	*Acer negundo*		Remove
4082	7	Green Ash	*Fraxinus pennsylvanica*		Remove
4083	7	Box Elder	*Acer negundo*		Remove
4084	7	Box Elder	*Acer negundo*		Remove
4085	17	Box Elder	*Acer negundo*		Remove
4086	7	Box Elder	*Acer negundo*		Remove
4087	9	Box Elder	*Acer negundo*		Remove
4088	8	Box Elder	*Acer negundo*		Remove
4089	9	Box Elder	*Acer negundo*		Remove
4090	6	Box Elder	*Acer negundo*		Remove
4091	8	Box Elder	*Acer negundo*		Remove
4092	12	Box Elder	*Acer negundo*	50% top missing	Remove
4093	12	Box Elder	*Acer negundo*		remove
4094	6	Box Elder	*Acer negundo*		Remove
4095	8	Box Elder	*Acer negundo*		Remove
4096	11	Box Elder	*Acer negundo*		Remove
4097	7	Box Elder	*Acer negundo*		Save
4098	7	Box Elder	*Acer negundo*		Save
4099	6	Box Elder	*Acer negundo*		Save
4100	12	Box Elder	*Acer negundo*		Save
4101	10,6	Box Elder	*Acer negundo*		Save
4102	10	Box Elder	*Acer negundo*		Save
4103	7	Box Elder	*Acer negundo*		Save
4104	7	Box Elder	*Acer negundo*		Save
4105	12	Box Elder	*Acer negundo*		Save
4106	9	Box Elder	*Acer negundo*		Save

Tag #	DBH	Common Name	Scientific Name	Notes	Status
4107	10	Box Elder	*Acer negundo*		Save
4108	10,6	Box Elder	*Acer negundo*		Remove
4109	6,6	Box Elder	*Acer negundo*		Remove
4110	6,6	Box Elder	*Acer negundo*		Remove
4111	6	Box Elder	*Acer negundo*		Remove
4112	6	Box Elder	*Acer negundo*		Remove
4113	10	Green Ash	*Fraxinus pennsylvanica*		Remove
4114	6	Green Ash	*Fraxinus pennsylvanica*		Remove
4115	8	Box Elder	*Acer negundo*		Remove
4116	6	Box Elder	*Acer negundo*		Remove
4117	11	Green Ash	*Fraxinus pennsylvanica*		Remove
4118	7	Box Elder	*Acer negundo*		Save
4119	9,8	Box Elder	*Acer negundo*		Save
4120	6	Box Elder	*Acer negundo*		Remove
4121	16	Box Elder	*Acer negundo*		Save
4122	4	Red Cedar	*Juniperus virginiana*	15' in height	Remove
4123	3	Red Cedar	*Juniperus virginiana*	10' in height	Remove
4124	6	Red Cedar	*Juniperus virginiana*		Remove
4125	3	Red Cedar	*Juniperus virginiana*	12' in height	Remove
4126	7	Apple	*Malus* sp.		Remove
4127	11	Red Cedar	*Juniperus virginiana*		Remove
4128	4	Red Cedar	*Juniperus virginiana*	20' in height	Remove
4129	9	Red Cedar	*Juniperus virginiana*		Remove
4130	4	Red Cedar	*Juniperus virginiana*	15' in height	Remove
4131	4,3	Red Cedar	*Juniperus virginiana*	15' in height	Remove
4132	7,6	Box Elder	*Acer negundo*		Remove
4133	10	Red Cedar	*Juniperus virginiana*		Remove
4134	9	Red Cedar	*Juniperus virginiana*		Remove
4135	6,6	Basswood	*Tilia americana*		Remove
4136	6	Crabapple	*Malus sp.*		Remove
4137	3	White Spruce	*Picea glauca*	10' in height	Remove
4138	8	White Spruce	*Picea glauca*		Remove
4139	4	White Spruce	*Picea glauca*	15' in height	Remove
4140	6	White Spruce	*Picea glauca*		Remove
4141	4	White Spruce	*Picea glauca*	15' in height	Remove
4142	6	White Spruce	*Picea glauca*		Remove
4143	6	White Spruce	*Picea glauca*		Save
4144	4	White Spruce	*Picea glauca*	15' in height	Remove
4145	5	White Spruce	*Picea glauca*	20' in height	Remove
4146	6	White Spruce	*Picea glauca*		Save
4147	6	Green Ash	*Fraxinus pennsylvanica*		Remove
4148	8	Box Elder	*Acer negundo*		Remove
4149	17	Box Elder	*Acer negundo*		Remove
4150	14,12	Box Elder	*Acer negundo*		Remove
4151	18,18,14,14,6	Box Elder	*Acer negundo*		Remove
4152	9	Box Elder	*Acer negundo*		Remove
4153	17,15	Box Elder	*Acer negundo*		Remove
4154	16	Box Elder	*Acer negundo*		Remove
4155	17	Box Elder	*Acer negundo*		Remove
4156	16	Sugar Maple	*Acer saccharum*		Remove
4157	10	Sugar Maple	*Acer saccharum*		Save
4158	16	Box Elder	*Acer negundo*		Save
4159	22	Box Elder	*Acer negundo*		Save
4160	18	Box Elder	*Acer negundo*		Save
4161	11	Box Elder	*Acer negundo*		Save
4162	16	Box Elder	*Acer negundo*		Save
4163	11	Box Elder	*Acer negundo*		Save
4164	11	Box Elder	*Acer negundo*		Save
4165	17	Box Elder	*Acer negundo*		Save
4166	16	Box Elder	*Acer negundo*		Save
4167	16	Box Elder	*Acer negundo*		Save
4168	6	Sugar Maple	*Acer saccharum*		Save
4169	17	Box Elder	*Acer negundo*		Save
4170	12	Box Elder	*Acer negundo*		Save
4171	11	Box Elder	*Acer negundo*		Save
4172	9	Box Elder	*Acer negundo*		Save
4173	14	Box Elder	*Acer negundo*		Save
4174	11	Box Elder	*Acer negundo*		Save
4175	9	Box Elder	*Acer negundo*		Save
4176	11	Box Elder	*Acer negundo*		Save
4177	7	American Elm	*Ulmus americana*		Save
4178	14	Box Elder	*Acer negundo*		Save
4179	15	Sugar Maple	*Acer saccharum*		Save
4180	10	Sugar Maple	*Acer saccharum*		Save
4181	18	Green Ash	*Fraxinus pennsylvanica*		Save
4182	11	Sugar Maple	*Acer saccharum*		Save
4183	8	Box Elder	*Acer negundo*		Save
4184	8	American Elm	*Ulmus americana*		Save
4185	12	Box Elder	*Acer negundo*		Save
4186	18	Box Elder	*Acer negundo*		Save
4187	12	Box Elder	*Acer negundo*		Save
4188	6	Sugar Maple	*Acer saccharum*		Save
4189	6	Sugar Maple	*Acer saccharum*		Save
4190	10	Sugar Maple	*Acer saccharum*		Save
4191	8	Box Elder	*Acer negundo*		Save
4192	17	Green Ash	*Fraxinus pennsylvanica*		Save
4193	12	Sugar Maple	*Acer saccharum*		Save
4194	10	Sugar Maple	*Acer saccharum*		Save
4195	11	Sugar Maple	*Acer saccharum*		Save
4196	9	Sugar Maple	*Acer saccharum*		Save
4197	6	Sugar Maple	*Acer saccharum*		Save
4198	10	Sugar Maple	*Acer saccharum*		Save
4199	8	Sugar Maple	*Acer saccharum*		Save
4200	11	Sugar Maple	*Acer saccharum*		Save
4201	8	American Elm	*Ulmus americana*		Save
4202	6	Sugar Maple	*Acer saccharum*		Save
4203	6	Sugar Maple	*Acer saccharum*		Save
4204	11	Sugar Maple	*Acer saccharum*		Save

Tag #	DBH	Common Name	Scientific Name	Notes	Status
4205	9	Box Elder	*Acer negundo*		Save
4206	13	Box Elder	*Acer negundo*		Save
4207	10	Box Elder	*Acer negundo*		Save
4208	9	Box Elder	*Acer negundo*		Remove
4209	13,10	Box Elder	*Acer negundo*		Remove
4210	11	Sugar Maple	*Acer saccharum*		Save
4211	11	American Elm	*Ulmus americana*		Save
4212	9	American Elm	*Ulmus americana*		Save
4213	10	Sugar Maple	*Acer saccharum*		Save
4214	9	American Elm	*Ulmus americana*		Save
4215	28	Sugar Maple	*Acer saccharum*		Save
4216	12,7	Box Elder	*Acer negundo*		Save
4217	14	Box Elder	*Acer negundo*		Save
4218	13	Sugar Maple	*Acer saccharum*		Save
4219	7	Sugar Maple	*Acer saccharum*		Save
4220	6	American Elm	*Ulmus americana*		Save
4221	7	Sugar Maple	*Acer saccharum*		Save
4222	10	American Elm	*Ulmus americana*		Save
4223	11	Green Ash	*Fraxinus pennsylvanica*		Save
4224	7	Box Elder	*Acer negundo*		Save
4225	6	American Elm	*Ulmus americana*		Save
4226	7	Sugar Maple	*Acer saccharum*		Save
4227	11,10	American Elm	*Ulmus americana*		Save
4228	6	Sugar Maple	*Acer saccharum*		Save
4229	7	Sugar Maple	*Acer saccharum*		Save
4230	11	Butternut	*Juglans cinerea*	80% dead, full of cankers	Save
4231	6	Sugar Maple	*Acer saccharum*		Save
4232	6	American Elm	*Ulmus americana*		Save
4233	7	Sugar Maple	*Acer saccharum*		Save
4234	8	Red Oak	*Quercus rubra*		Save
4235	8	American Elm	*Ulmus americana*		Save
4236	10	American Elm	*Ulmus americana*		Save
4237	10	Basswood	*Tilia americana*		Save
4238	14	Red Cedar	*Juniperus virginiana*		Save
4239	25	Bur Oak	*Quercus macrocarpa*		Save
4240	20	Bur Oak	*Quercus macrocarpa*		Save
4241	21	Sugar Maple	*Acer saccharum*		Save
4242	6	Ironwood	*Ostrya virginiana*		Save
4243	8	American Elm	*Ulmus americana*		Save
4244	9	American Elm	*Ulmus americana*		Save
4245	21	Bur Oak	*Quercus macrocarpa*		Save
4246	8	Sugar Maple	*Acer saccharum*		Save
4247	7	Sugar Maple	*Acer saccharum*		Save
4248	15	Red Oak	*Quercus rubra*		Save
4249	6	Green Ash	*Fraxinus pennsylvanica*		Save
4250	6	Quaking Aspen	*Populus tremuloides*		Save
4251	12	Red Oak	*Quercus rubra*		Save
4252	8	Sugar Maple	*Acer saccharum*		Save
4253	6	Sugar Maple	*Acer saccharum*		Save
4254	27	Bur Oak	*Quercus macrocarpa*		Save
4255	6	American Elm	*Ulmus americana*		Save
4256	30	Bur Oak	*Quercus macrocarpa*		Save
4257	8	American Elm	*Ulmus americana*		Save
4258	6	Sugar Maple	*Acer saccharum*		Save
4259	23	Bur Oak	*Quercus macrocarpa*		Save
4260	28	Bur Oak	*Quercus macrocarpa*		Save
4261	19	American Elm	*Ulmus americana*		Save
4262	6	Sugar Maple	*Acer saccharum*		Save
4263	10,10	Red Oak	*Quercus rubra*		Save
4264	11	Red Oak	*Quercus rubra*		Save
4265	8	Red Oak	*Quercus rubra*		Save
4266	9	Red Oak	*Quercus rubra*		Save
4267	10	Red Oak	*Quercus rubra*		Save
4268	6	Sugar Maple	*Acer saccharum*		Save
4269	13	Red Oak	*Quercus rubra*		Save
4270	13	Red Oak	*Quercus rubra*		Save
4271	14	Red Oak	*Quercus rubra*		Save
4272	11	Red Oak	*Quercus rubra*		Save
4273	6	Sugar Maple	*Acer saccharum*		Save
4274	9	Red Oak	*Quercus rubra*		Save
4275	33	Green Ash	*Fraxinus pennsylvanica*		Save
4276	7	American Elm	*Ulmus americana*		Save
4277	6	Red Cedar	*Juniperus virginiana*		Save
4278	9	American Elm	*Ulmus americana*		Save
4279	9	American Elm	*Ulmus americana*		Save
4280	6	American Elm	*Ulmus americana*		Save
4281	6	American Elm	*Ulmus americana*		Save
4282	12	Red Oak	*Quercus rubra*		Save
4283	13	Red Oak	*Quercus rubra*		Save
4284	7	Red Oak	*Quercus rubra*		Save
4285	10	Red Oak	*Quercus rubra*		Save
4286	6	Red Oak	*Quercus rubra*		Save
4287	8	Red Oak	*Quercus rubra*		Save
4288	11	Red Oak	*Quercus rubra*		Save
4289	12	American Elm	*Ulmus americana*		Save
4290	9	American Elm	*Ulmus americana*		Save
4291	11	American Elm	*Ulmus americana*		Save
4292	10	Sugar Maple	*Acer saccharum*		Save
4293	7	Red Oak	*Quercus rubra*		Save
4294	8	Sugar Maple	*Acer saccharum*		Save
4295	7	Sugar Maple	*Acer saccharum*		Save
4296	7	American Elm	*Ulmus americana*		Save
4297	10	American Elm	*Ulmus americana*		Save
4298	10	American Elm	*Ulmus americana*		Save
4299	7	Box Elder	*Acer negundo*		Save
4300	13	American Elm	*Ulmus americana*		Save
4301	14,13,6	Box Elder	*Acer negundo*		Save
4302	23	Bur Oak	*Quercus macrocarpa*		Remove

Tag #	DBH	Common Name	Scientific Name	Notes	Status
4303	11	American Elm	*Ulmus americana*		Save
4304	6	Sugar Maple	*Acer saccharum*		Save
4305	11	Red Oak	*Quercus rubra*		Save
4306	12	Red Oak	*Quercus rubra*		Remove
4307	10	Red Oak	*Quercus rubra*		Remove
4308	7	Sugar Maple	*Acer saccharum*		Save
4309	10	American Elm	*Ulmus americana*		Save
4310	25	Bur Oak	*Quercus macrocarpa*		Save
4311	6	Sugar Maple	*Acer saccharum*		Save
4312	9	Red Oak	*Quercus rubra*		Save
4313	16	Box Elder	*Acer negundo*		Save
4314	6	American Elm	*Ulmus americana*		Save
4316	26	Sugar Maple	*Acer saccharum*		Save
4317	6	American Elm	*Ulmus americana*		Save
4318	17,16	Siberian Elm	*Ulmus pumila*		Save
4319	6	American Elm	*Ulmus americana*		Save
4320	6	American Elm	*Ulmus americana*		Remove
4321	9	Sugar Maple	*Acer saccharum*		Save
4322	9	Black Cherry	*Prunus serotina*		Save
4323	5	Red Pine	*Pinus resinosa*	80% shade suppressed	Save
4324	6	Red Pine	*Pinus resinosa*	90% shade suppressed	Save
4325	12	Box Elder	*Acer negundo*		Save
4326	16	Box Elder	*Acer negundo*		Save
4327	9	Box Elder	*Acer negundo*		Save
4328	9	American Elm	*Ulmus americana*		Remove
4329	8	Red Pine	*Pinus resinosa*		Save
4330	7	Red Pine	*Pinus resinosa*		Save
4331	8	Red Pine	*Pinus resinosa*		Save
4332	6	Red Pine	*Pinus resinosa*		Save
4333	6	Red Pine	*Pinus resinosa*		Save
4334	6	Red Pine	*Pinus resinosa*		Save
4335	9	Red Pine	*Pinus resinosa*		Save
4336	12	Box Elder	*Acer negundo*		Save
4337	8	Red Pine	*Pinus resinosa*		Save
4338	5	Red Pine	*Pinus resinosa*	30' in height	Save
4339	7	Red Pine	*Pinus resinosa*		Save
4340	9	Red Pine	*Pinus resinosa*		Save
4341	8	Red Pine	*Pinus resinosa*		Save
4342	9	Box Elder	*Acer negundo*		Save
4343	8	Red Pine	*Pinus resinosa*		Save
4344	6	Sugar Maple	*Acer saccharum*		Save
4345	6	Red Pine	*Pinus resinosa*		Save
4346	5	Red Pine	*Pinus resinosa*	30' in height	Save
4347	6	Red Pine	*Pinus resinosa*		Save
4348	10	Red Pine	*Pinus resinosa*		Save
4349	11	Red Pine	*Pinus resinosa*		Save
4350	6	Red Pine	*Pinus resinosa*		Save
4351	7	Red Pine	*Pinus resinosa*		Save
4352	9	Red Pine	*Pinus resinosa*		Save
4353	8	Red Pine	*Pinus resinosa*		Save
4354	6	Red Pine	*Pinus resinosa*		Save
4355	5	Red Pine	*Pinus resinosa*	30' in height	Save
4356	6	Red Pine	*Pinus resinosa*		Save
4357	6	Red Pine	*Pinus resinosa*		Save
4358	5	Red Pine	*Pinus resinosa*	30' in height	Save
4359	5	Red Pine	*Pinus resinosa*	30' in height	Save
4360	8	American Elm	*Ulmus americana*		Save
4361	11	American Elm	*Ulmus americana*		Save
4362	9	Box Elder	*Acer negundo*		Save
4363	5	Red Pine	*Pinus resinosa*		Save
4364	6	American Elm	*Ulmus americana*		Save
4365	12	Box Elder	*Acer negundo*		Save
4366	7	Red Pine	*Pinus resinosa*		Remove
4367	14,9	Box Elder	*Acer negundo*		Remove
4368	9	Box Elder	*Acer negundo*		Remove
4369	6	Red Pine	*Pinus resinosa*		Remove
4370	6	Red Pine	*Pinus resinosa*		Remove
4371	8	Red Pine	*Pinus resinosa*		Remove
4372	6	American Elm	*Ulmus americana*		Remove
4373	11	American Elm	*Ulmus americana*		Save
4374	10	American Elm	*Ulmus americana*		Save
4375	5	Red Pine	*Pinus resinosa*	30' in height	Remove
4376	7	Red Pine	*Pinus resinosa*		Remove
4377	5	Red Pine	*Pinus resinosa*	30' in height	Remove
4378	4	Red Pine	*Pinus resinosa*	25' in height	Remove
4379	6	Red Pine	*Pinus resinosa*		Remove
4380	6	Red Pine	*Pinus resinosa*		Remove
4381	7	Red Pine	*Pinus resinosa*		Remove
4382	4	Red Pine	*Pinus resinosa*	30' in height	Save
4383	7	Red Pine	*Pinus resinosa*		Remove
4384	5	Red Pine	*Pinus resinosa*	30' in height	Save
4385	5	Red Pine	*Pinus resinosa*	30' in height	Save
4386	4	Red Pine	*Pinus resinosa*	30' in height	Save
4387	4	Red Pine	*Pinus resinosa*	25' in height	Save
4388	4	Red Pine	*Pinus resinosa*	25' in height	Save
4389	7	Red Pine	*Pinus resinosa*		Save
4390	5	Red Pine	*Pinus resinosa*	30' in height	Save
4391	8	Red Pine	*Pinus resinosa*		Save
4392	5	Red Pine	*Pinus resinosa*	30' in height	Save
4393	8	Red Pine	*Pinus resinosa*		Save
4394	6	Red Pine	*Pinus resinosa*		Save
4395	11	Green Ash	*Fraxinus pennsylvanica*		Save
4396	6	Red Pine	*Pinus resinosa*		Save
4397	7	American Elm	*Ulmus americana*		Save
4398	9	Red Pine	*Pinus resinosa*		Save
4399	16	American Elm	*Ulmus americana*		Save
4400	6	Hackberry	*Celtis occidentalis*		Save
4401	10	Red Pine	*Pinus resinosa*		Save

01-PLAN-120158-SHEET-TREE.DWG

PIONEER engineering
CIVIL ENGINEERS LAND PLANNERS LAND SURVEYORS LANDSCAPE ARCHITECTS
2422 Enterprise Drive
Mendota Heights, MN 55120
(651) 681-1914
Fax: 681-9488
www.pioneereng.com

I hereby certify that this plan was prepared by me or under my direct supervision and that I am a duly Licensed Landscape Architect under the laws of the State of Minnesota
Name Jennifer L. Thompson
Reg. No. 44763 Date 5-3-2022

Revisions

Date 05-03-2022
Designed TLM
Drawn TLM

TREE PRESERVATION

JOHNSON - REILAND
616 HIGHWAY 3
DUNDAS, MINNESOTA 55019

ENSCONCED WOODS
CHASKA, MINNESOTA

T5 OF 6

© 2022 Pioneer Engineering, P.A.

Tag #	DBH	Common Name	Scientific Name	Notes	Status
4402	9	Red Pine	*Pinus resinosa*		Save
4403	7	Red Pine	*Pinus resinosa*		Save
4404	6	Red Pine	*Pinus resinosa*		Save
4405	6	Red Pine	*Pinus resinosa*		Save
4406	5	Red Pine	*Pinus resinosa*	25' in height	Save
4407	6	Sugar Maple	*Acer saccharum*		Save
4408	6	Red Pine	*Pinus resinosa*		Save
4410	6	Red Pine	*Pinus resinosa*		Save
4411	8	Red Pine	*Pinus resinosa*		Save
4412	8	Red Pine	*Pinus resinosa*		Save
4413	6	Red Pine	*Pinus resinosa*		Save
4414	5	Red Pine	*Pinus resinosa*	30' in height	Save
4415	5	Red Pine	*Pinus resinosa*	30' in height	Save
4416	8	Red Pine	*Pinus resinosa*		Save
4417	6	Red Pine	*Pinus resinosa*		Save
4418	4	Red Pine	*Pinus resinosa*	30' in height	Save
4419	7	Red Pine	*Pinus resinosa*		Save
4420	10	American Elm	*Ulmus americana*		Save
4421	6	Red Pine	*Pinus resinosa*		Save
4422	6	Red Pine	*Pinus resinosa*		Save
4423	4	Red Pine	*Pinus resinosa*	30' in height	Save
4424	4	Red Pine	*Pinus resinosa*	30' in height	Save
4425	5	Red Pine	*Pinus resinosa*	30' in height	Save
4426	4	Red Pine	*Pinus resinosa*	30' in height	Save
4427	11	Red Pine	*Pinus resinosa*		Save
4428	11	Red Oak	*Quercus rubra*		Save
4429	11	Red Pine	*Pinus resinosa*		Save
4430	9	Red Pine	*Pinus resinosa*		Save
4431	9	Red Pine	*Pinus resinosa*		Save
4432	31	Sugar Maple	*Acer saccharum*		Save
5784	27	Bur Oak	*Quercus macrocarpa*	old tag	save
5787	7	Green Ash	*Fraxinus pennsylvanica*	old tag	Save
5788	12	Green Ash	*Fraxinus pennsylvanica*	old tag	Save
5789	8	Green Ash	*Fraxinus pennsylvanica*	old tag	Save
5790	12	Green Ash	*Fraxinus pennsylvanica*	old tag	Save
5791	11	Hackberry	*Celtis occidentalis*	old tag	Remove
5837	33	Bur Oak	*Quercus macrocarpa*	old tag	Remove
5839	29	Bur Oak	*Quercus macrocarpa*	old tag	Remove
5843	25	Bur Oak	*Quercus macrocarpa*	old tag	Remove
5845	25	Bur Oak	*Quercus macrocarpa*	old tag	Remove
5849	23	Bur Oak	*Quercus macrocarpa*	old tag	Save

Tag #	Size (DBH")	Common Name	Scientific Name	Notes	Status
5077	16	Bur Oak	*Quercus macrocarpa*		Save
5079	22	Bur Oak	*Quercus macrocarpa*		Save
5084	18	Bur Oak	*Quercus macrocarpa*		Remove
5088	23	Bur Oak	*Quercus macrocarpa*		Remove
5090	6	Sugar Maple	*Acer saccharum*		Remove
5091	6	Sugar Maple	*Acer saccharum*		Remove
5092	7	Sugar Maple	*Acer saccharum*		Remove
5093	16	Bur Oak	*Quercus macrocarpa*		Remove
5094	6	Sugar Maple	*Acer saccharum*		Remove
5095	16,11	Bur Oak	*Quercus macrocarpa*		Remove
5096	18	Bur Oak	*Quercus macrocarpa*		Remove
5097	23	Bur Oak	*Quercus macrocarpa*	dead, top missing	Remove
5098	6	Sugar Maple	*Acer saccharum*		Remove
5099	18	Bur Oak	*Quercus macrocarpa*		Remove
5100	18	Bur Oak	*Quercus macrocarpa*		Remove
5326	7	Sugar Maple	*Acer saccharum*		Save
5327	8	Sugar Maple	*Acer saccharum*		Save
5342	8	Sugar Maple	*Acer saccharum*		Save
5351	24	Sugar Maple	*Acer saccharum*		Save
5352	15	Bur Oak	*Quercus macrocarpa*		Save
5360	16	Bur Oak	*Quercus macrocarpa*		Save
5365	7	Bur Oak	*Quercus macrocarpa*		Save
5366	14	Bur Oak	*Quercus macrocarpa*		Save
5375	6	Red Oak	*Quercus rubra*		Save
5501	19	Bur Oak	*Quercus macrocarpa*		Remove
5503	9	Red Oak	*Quercus rubra*		Save
5504	10	Red Oak	*Quercus rubra*		Remove
5505	19	Bur Oak	*Quercus macrocarpa*		Off-Site
5510	14	Bur Oak	*Quercus macrocarpa*		Off-Site
5511	10	Sugar Maple	*Acer saccharum*		Off-Site
5512	6	Bur Oak	*Quercus macrocarpa*		Off-Site
5513	16	Bur Oak	*Quercus macrocarpa*		Off-Site
5514	9	Bur Oak	*Quercus macrocarpa*		Off-Site
5516	9	Sugar Maple	*Acer saccharum*		Save
5517	17	Bur Oak	*Quercus macrocarpa*		Save
5518	14	Bur Oak	*Quercus macrocarpa*		Off-site
5520	9	Bur Oak	*Quercus macrocarpa*		Save
5521	9	Bur Oak	*Quercus macrocarpa*		Off-site
5525	15	Bur Oak	*Quercus macrocarpa*		Off-site
5526	8	Bur Oak	*Quercus macrocarpa*		Save
5530	19	Bur Oak	*Quercus macrocarpa*		Save
5531	10	Bur Oak	*Quercus macrocarpa*		Remove
5532	17	Bur Oak	*Quercus macrocarpa*		Remove
5533	21	Bur Oak	*Quercus macrocarpa*		Remove
5534	18	Bur Oak	*Quercus macrocarpa*		Remove
5536	12	Bur Oak	*Quercus macrocarpa*		Remove
5537	17	Bur Oak	*Quercus macrocarpa*		Remove
5538	19	Bur Oak	*Quercus macrocarpa*		Remove
5539	17	Bur Oak	*Quercus macrocarpa*		Remove
5541	14	Bur Oak	*Quercus macrocarpa*		Remove
5542	22	Bur Oak	*Quercus macrocarpa*		Remove
5547	18	Bur Oak	*Quercus macrocarpa*		Remove

Tag #	Size (DBH")	Common Name	Scientific Name	Notes	Status
5551	25	Red Oak	*Quercus rubra*	hollow along trunk , 60% top missing	Poor
5556	16	Bur Oak	*Quercus macrocarpa*	decay along trunk	Save
5557	15	Bur Oak	*Quercus macrocarpa*		Remove
5558	19	Bur Oak	*Quercus macrocarpa*		Remove
5559	18	Bur Oak	*Quercus macrocarpa*		Save
5561	12	Bur Oak	*Quercus macrocarpa*		Save
5562	6	Sugar Maple	*Acer saccharum*		Save
5563	19	Bur Oak	*Quercus macrocarpa*		Save
5564	13	Bur Oak	*Quercus macrocarpa*		Save
5565	33	Red Oak	*Quercus rubra*	50% top missing, hollow along trunk	Save
5567	15	Bur Oak	*Quercus macrocarpa*		Save
5568	7	Sugar Maple	*Acer saccharum*		Save
5569	7	Sugar Maple	*Acer saccharum*		Save
5571	22	Red Oak	*Quercus rubra*		Save
5572	11	Bur Oak	*Quercus macrocarpa*		Save
5573	18	Bur Oak	*Quercus macrocarpa*		Save
5575	13	Red Oak	*Quercus rubra*		Save
5578	6	Red Oak	*Quercus rubra*		Save
5580	18	Bur Oak	*Quercus macrocarpa*		Save
5581	12	Bur Oak	*Quercus macrocarpa*		Save
5586	12	Bur Oak	*Quercus macrocarpa*		Save
5587	25	Red Oak	*Quercus rubra*	hollow along main trunk	Save
5588	10	Bur Oak	*Quercus macrocarpa*		Save
5589	12	Bur Oak	*Quercus macrocarpa*	dead	Save
5595	12	Red Oak	*Quercus rubra*		Save
5596	11	Red Oak	*Quercus rubra*		Save
5597	17	Bur Oak	*Quercus macrocarpa*		Save
5598	17	Bur Oak	*Quercus macrocarpa*		Save
5601	8	Sugar Maple	*Acer saccharum*		Remove
5602	26	Bur Oak	*Quercus macrocarpa*		Remove
5603	8	Sugar Maple	*Acer saccharum*		Remove
5604	8	Sugar Maple	*Acer saccharum*		Remove
5605	9	Sugar Maple	*Acer saccharum*		Remove
5606	18	Bur Oak	*Quercus macrocarpa*		Remove
5607	18	Bur Oak	*Quercus macrocarpa*		Remove
5610	18	Bur Oak	*Quercus macrocarpa*		Remove
5611	20	Bur Oak	*Quercus macrocarpa*		Remove
5614	20	Bur Oak	*Quercus macrocarpa*		Remove
5615	19	Bur Oak	*Quercus macrocarpa*		Remove
5616	20	Bur Oak	*Quercus macrocarpa*		Remove
5617	6	Sugar Maple	*Acer saccharum*		Remove
5618	9	Sugar Maple	*Acer saccharum*		Remove
5619	11	Sugar Maple	*Acer saccharum*		Remove
5620	8	Sugar Maple	*Acer saccharum*		Remove
5621	8	Sugar Maple	*Acer saccharum*		Remove
5623	24	Sugar Maple	*Acer saccharum*		Remove
5624	20	Bur Oak	*Quercus macrocarpa*		Remove
5625	17	Bur Oak	*Quercus macrocarpa*		Remove
5626	16	Bur Oak	*Quercus macrocarpa*		Remove
5628	20	Bur Oak	*Quercus macrocarpa*		Remove
5629	12	Bur Oak	*Quercus macrocarpa*		Remove
5630	17	Bur Oak	*Quercus macrocarpa*		Remove
5631	14	Bur Oak	*Quercus macrocarpa*		Remove
5632	12	Sugar Maple	*Acer saccharum*		Remove
5633	15	Bur Oak	*Quercus macrocarpa*		Remove
5634	6	Bur Oak	*Quercus macrocarpa*		Remove
5635	8	Sugar Maple	*Acer saccharum*		Remove
5636	9	Sugar Maple	*Acer saccharum*		Remove
5637	16	Bur Oak	*Quercus macrocarpa*		Remove
5640	21	Bur Oak	*Quercus macrocarpa*		Remove
5641	18	Bur Oak	*Quercus macrocarpa*		Remove
5642	6	Red Oak	*Quercus rubra*		Remove
5643	21	Bur Oak	*Quercus macrocarpa*		Save
5645	12	Bur Oak	*Quercus macrocarpa*	hollow along main trunk	Save
5646	21	Bur Oak	*Quercus macrocarpa*		Save
5648	20	Bur Oak	*Quercus macrocarpa*		Save
5649	13	Bur Oak	*Quercus macrocarpa*		Save
5650	18	Bur Oak	*Quercus macrocarpa*		Save
5653	12	Bur Oak	*Quercus macrocarpa*		Save
5654	17	Bur Oak	*Quercus macrocarpa*		Save
5655	6	Sugar Maple	*Acer saccharum*		Save
5656	6	Sugar Maple	*Acer saccharum*		Save
5658	19	Bur Oak	*Quercus macrocarpa*		Save
5666	6	Sugar Maple	*Acer saccharum*		Save
5667	6	Sugar Maple	*Acer saccharum*		Save
5670	6	Sugar Maple	*Acer saccharum*		Save
5671	9	Bur Oak	*Quercus macrocarpa*		Save
5672	9	Sugar Maple	*Acer saccharum*		Save
5673	18	Bur Oak	*Quercus macrocarpa*		Save
5674	6	Red Oak	*Quercus rubra*		Save
5675	17	Bur Oak	*Quercus macrocarpa*		Save
5677	9	Bur Oak	*Quercus macrocarpa*		Save
5678	17	Bur Oak	*Quercus macrocarpa*		Save
5679	10	Sugar Maple	*Acer saccharum*		Save
5680	9	Sugar Maple	*Acer saccharum*		Save
5681	7	Sugar Maple	*Acer saccharum*		Save
5682	7	Sugar Maple	*Acer saccharum*		Save
5684	22	Bur Oak	*Quercus macrocarpa*		Save
5685	7	Sugar Maple	*Acer saccharum*		Save
5686	21	Bur Oak	*Quercus macrocarpa*		Save
5687	6	Sugar Maple	*Acer saccharum*		Save
5688	6	Sugar Maple	*Acer saccharum*		Save
5689	16	Bur Oak	*Quercus macrocarpa*		Save
5691	19	Bur Oak	*Quercus macrocarpa*		Save
5692	12	Sugar Maple	*Acer saccharum*		Save
5693	7	Sugar Maple	*Acer saccharum*		Save
5696	18	Bur Oak	*Quercus macrocarpa*		Save
5699	11	Red Oak	*Quercus rubra*		Save

Tag #	Size (DBH")	Common Name	Scientific Name	Notes	Status
5700	16	Bur Oak	*Quercus macrocarpa*		Save
5701	17	Bur Oak	*Quercus macrocarpa*		Save
5702	18	Bur Oak	*Quercus macrocarpa*		Save
5703	19	Bur Oak	*Quercus macrocarpa*		Save
5706	18	Bur Oak	*Quercus macrocarpa*	40% dead, remaining 60% is healthy	Save
5708	23	Bur Oak	*Quercus macrocarpa*		Save
5709	21	Bur Oak	*Quercus macrocarpa*		Save
5710	8	Bur Oak	*Quercus macrocarpa*		Save
5712	8	Sugar Maple	*Acer saccharum*		Save
5713	18	Bur Oak	*Quercus macrocarpa*		Save
5714	11	Bur Oak	*Quercus macrocarpa*		Off-site
5715	17	Bur Oak	*Quercus macrocarpa*		Off-site
5716	17	Bur Oak	*Quercus macrocarpa*		Off-site
5717	8	Sugar Maple	*Acer saccharum*		Off-site
5718	8	Sugar Maple	*Acer saccharum*		Off-site
5719	16	Bur Oak	*Quercus macrocarpa*		Save
5720	21	Bur Oak	*Quercus macrocarpa*		Save
5721	10	Bur Oak	*Quercus macrocarpa*		Save
5722	18	Bur Oak	*Quercus macrocarpa*		Save
5724	7	Sugar Maple	*Acer saccharum*		Save
5725	6	Sugar Maple	*Acer saccharum*		Save
5726	6	Sugar Maple	*Acer saccharum*		Save
5729	21,19	Bur Oak	*Quercus macrocarpa*		Save
5731	10	Sugar Maple	*Acer saccharum*		Save
5733	16	Bur Oak	*Quercus macrocarpa*		Save
5734	6	Sugar Maple	*Acer saccharum*		Save
5735	8	Sugar Maple	*Acer saccharum*		Save
5736	11	Sugar Maple	*Acer saccharum*		Save
5738	15	Bur Oak	*Quercus macrocarpa*		Save
5740	18	Bur Oak	*Quercus macrocarpa*		Save
5741	23	Bur Oak	*Quercus macrocarpa*		Save
5743	25	Sugar Maple	*Acer saccharum*	hollow, 40% storm damage to crown	Save
5744	17	Bur Oak	*Quercus macrocarpa*		Save
5749	6	Sugar Maple	*Acer saccharum*		Save
5752	13	Bur Oak	*Quercus macrocarpa*		Save
5753	19	Bur Oak	*Quercus macrocarpa*		Save
5756	15	Bur Oak	*Quercus macrocarpa*		Remove
5757	19	Bur Oak	*Quercus macrocarpa*		Remove
5758	6	Sugar Maple	*Acer saccharum*		Remove
5762	7	Sugar Maple	*Acer saccharum*		Save
5763	6	Sugar Maple	*Acer saccharum*		Save
5764	6	Sugar Maple	*Acer saccharum*		Save
5765	17	Bur Oak	*Quercus macrocarpa*		Save
5766	14	Bur Oak	*Quercus macrocarpa*		Save
5767	17	Bur Oak	*Quercus macrocarpa*		Save
5768	12	Bur Oak	*Quercus macrocarpa*	double tagged with #5769	Save
5771	22	Bur Oak	*Quercus macrocarpa*		Save
5772	21	Bur Oak	*Quercus macrocarpa*		Save
5773	20	Bur Oak	*Quercus macrocarpa*		Save
5774	21	Bur Oak	*Quercus macrocarpa*		Save
5775	8	Sugar Maple	*Acer saccharum*		Save
5776	16	Bur Oak	*Quercus macrocarpa*		Save
5777	18	Bur Oak	*Quercus macrocarpa*		Save
5778	8	Bur Oak	*Quercus macrocarpa*		Save
5779	18	Bur Oak	*Quercus macrocarpa*		Remove
5780	18	Bur Oak	*Quercus macrocarpa*		Save
5781	9	Sugar Maple	*Acer saccharum*		Remove
5782	18	Bur Oak	*Quercus macrocarpa*		Remove
5783	17	Bur Oak	*Quercus macrocarpa*		Remove
5786	19	Sugar Maple	*Acer saccharum*		Save
5792	28	Bur Oak	*Quercus macrocarpa*		Remove
5793	26	Bur Oak	*Quercus macrocarpa*		Remove
5794	25	Bur Oak	*Quercus macrocarpa*		Remove
5795	28	Bur Oak	*Quercus macrocarpa*		Save
5796	11	Sugar Maple	*Acer saccharum*		Save
5798	27	Bur Oak	*Quercus macrocarpa*		Remove
5799	11	Red Oak	*Quercus rubra*		Remove
5800	22	Bur Oak	*Quercus macrocarpa*		Remove
5813	25	Sugar Maple	*Acer saccharum*		Remove
5814	29	Red Oak	*Quercus rubra*		Remove
5815	28	Red Oak	*Quercus rubra*		Remove
5816	24	Bur Oak	*Quercus macrocarpa*		Remove
5818	18	Bur Oak	*Quercus macrocarpa*		Remove
5819	25	Red Oak	*Quercus rubra*		Remove
5820	16	Bur Oak	*Quercus macrocarpa*		Remove
5821	36	Red Oak	*Quercus rubra*		Remove
5822	26	Red Oak	*Quercus rubra*	35% top missing, deacy along trunk	Remove
5823	33	Red Oak	*Quercus rubra*		Remove
5824	23	Sugar Maple	*Acer saccharum*		Remove
5825	24	Sugar Maple	*Acer saccharum*		Remove
5826	30	Sugar Maple	*Acer saccharum*		Remove
5828	21	Sugar Maple	*Acer saccharum*		Remove
5829	24	Bur Oak	*Quercus macrocarpa*		Remove
5830	23	Bur Oak	*Quercus macrocarpa*		Remove
5831	24	Bur Oak	*Quercus macrocarpa*	under stress, epicormic branching, he	Remove
5832	22	Bur Oak	*Quercus macrocarpa*		Remove
5833	24	Bur Oak	*Quercus macrocarpa*		Remove
5835	15	Sugar Maple	*Acer saccharum*		Remove
5840	25	Bur Oak	*Quercus macrocarpa*		Remove
5841	28	Red Oak	*Quercus rubra*	hollow	Remove
5842	24	Bur Oak	*Quercus macrocarpa*		Remove
5847	24	Bur Oak	*Quercus macrocarpa*		Remove
5848	28	Bur Oak	*Quercus macrocarpa*		Remove
5851	18	Bur Oak	*Quercus macrocarpa*		Remove
5852	23	Bur Oak	*Quercus macrocarpa*	25% storm damage to crown	Remove
5853	25	Bur Oak	*Quercus macrocarpa*	major decay along trunk	Remove
5854	10	Sugar Maple	*Acer saccharum*		Remove
5858	13	Bur Oak	*Quercus macrocarpa*	double tagged with #5859	Save

Tag #	Size (DBH")	Common Name	Scientific Name	Notes	Status
5862	21	Bur Oak	*Quercus macrocarpa*		Save
5864	23	Bur Oak	*Quercus macrocarpa*		Save
5865	17	Bur Oak	*Quercus macrocarpa*		Remove
5866	20	Bur Oak	*Quercus macrocarpa*		Remove
5867	24	Sugar Maple	*Acer saccharum*		Remove
5868	17	Bur Oak	*Quercus macrocarpa*		Save
5871	25	Red Oak	*Quercus rubra*		Remove
5872	16	Bur Oak	*Quercus macrocarpa*		Remove
5873	24	Red Oak	*Quercus rubra*		Remove
5874	15	Bur Oak	*Quercus macrocarpa*		Remove
5875	25	Red Oak	*Quercus rubra*	completely hollow lower 15' of trunk	Remove
5876	18	Bur Oak	*Quercus macrocarpa*		Remove
5877	9	Red Oak	*Quercus rubra*		Remove
5878	9	Red Oak	*Quercus rubra*		Remove
5879	7	Sugar Maple	*Acer saccharum*		Remove
5880	6	Sugar Maple	*Acer saccharum*		Remove
5882	17	Bur Oak	*Quercus macrocarpa*		Remove
5883	34	Red Oak	*Quercus rubra*		Remove
5884	30	Sugar Maple	*Acer saccharum*		Remove
5885	22	Red Oak	*Quercus rubra*		Remove
5886	18	Bur Oak	*Quercus macrocarpa*		Remove
5887	17	Bur Oak	*Quercus macrocarpa*		Remove
5888	20	Bur Oak	*Quercus macrocarpa*		Remove
5890	16	Bur Oak	*Quercus macrocarpa*		Remove
5891	7	Sugar Maple	*Acer saccharum*		Remove
5892	10	Sugar Maple	*Acer saccharum*		Remove
5893	6	Sugar Maple	*Acer saccharum*		Remove
5894	16	Bur Oak	*Quercus macrocarpa*		Remove
5895	18	Bur Oak	*Quercus macrocarpa*		Remove
5896	9	Sugar Maple	*Acer saccharum*		Remove
5897	20	Bur Oak	*Quercus macrocarpa*		Remove
5898	16,16	Bur Oak	*Quercus macrocarpa*		Remove
5899	15	Bur Oak	*Quercus macrocarpa*		Remove
5900	27	Bur Oak	*Quercus macrocarpa*		Remove
5901	17	Sugar Maple	*Acer saccharum*		Remove
5902	8	Sugar Maple	*Acer saccharum*		Remove
5908	20	Bur Oak	*Quercus macrocarpa*		Remove
5910	15	Sugar Maple	*Acer saccharum*		Remove
5911	9	Sugar Maple	*Acer saccharum*		Remove
5912	22	Bur Oak	*Quercus macrocarpa*		Remove
5913	10	Sugar Maple	*Acer saccharum*		Remove
5914	8	Sugar Maple	*Acer saccharum*		Remove
5915	6	Sugar Maple	*Acer saccharum*		Remove
5917	8	Sugar Maple	*Acer saccharum*		Remove
5918	7	Sugar Maple	*Acer saccharum*		Remove
5921	23	Sugar Maple	*Acer saccharum*		Remove
5922	23	Bur Oak	*Quercus macrocarpa*		Remove
5924	24	Bur Oak	*Quercus macrocarpa*		Remove
5925	7	Sugar Maple	*Acer saccharum*		Remove
5926	7	Sugar Maple	*Acer saccharum*		Remove
5933	9	Sugar Maple	*Acer saccharum*		Remove
5941	11	Red Oak	*Quercus rubra*		Save
5943	11	Sugar Maple	*Acer saccharum*		Save
5946	6	Sugar Maple	*Acer saccharum*		Save
5947	10	Sugar Maple	*Acer saccharum*		save
5949	16	Sugar Maple	*Acer saccharum*	dead	Save
5950	10,7	Sugar Maple	*Acer saccharum*		Save
5951	8	Sugar Maple	*Acer saccharum*		Save
5952	7	Sugar Maple	*Acer saccharum*		Save
5954	9	Sugar Maple	*Acer saccharum*		Save
5956	8	Sugar Maple	*Acer saccharum*		Save
5958	11	Sugar Maple	*Acer saccharum*		Save
5960	8	Sugar Maple	*Acer saccharum*		Save
5975	9	Sugar Maple	*Acer saccharum*		Remove
5976	8	Sugar Maple	*Acer saccharum*		Remove
5978	6	Sugar Maple	*Acer saccharum*		Off-site
5979	6	Sugar Maple	*Acer saccharum*		Off-site
5980	6	Red Oak	*Quercus rubra*		Off-site
5981	8	Sugar Maple	*Acer saccharum*		Off-site
5982	9	Sugar Maple	*Acer saccharum*		Off-site
5983	7	Sugar Maple	*Acer saccharum*		Save
5984	6	Red Oak	*Quercus rubra*		Remove
5985	8	Sugar Maple	*Acer saccharum*		Remove
5986	6	Sugar Maple	*Acer saccharum*		Remove
5987	6	Sugar Maple	*Acer saccharum*		Remove
5988	10	Red Oak	*Quercus rubra*		Remove
5990	30	Red Oak	*Quercus rubra*		Remove
5993	20	Bur Oak	*Quercus macrocarpa*		Remove
5996	8	Red Oak	*Quercus rubra*		Remove
5998	8	Sugar Maple	*Acer saccharum*		Remove
5999	6	Sugar Maple	*Acer saccharum*		Remove
6000	6	Sugar Maple	*Acer saccharum*		Remove

PIONEERengineering
CIVIL ENGINEERS LAND PLANNERS LAND SURVEYORS LANDSCAPE ARCHITECTS
2422 Enterprise Drive
Mendota Heights, MN 55120
(651) 681-1914
Fax: 681-9488
www.pioneereng.com

I hereby certify that this plan was prepared by me or under my direct supervision and that I am a duly Licensed Landscape Architect under the laws of the State of Minnesota
Name Jennifer L. Thompson
Reg. No. 44763 Date 5-3-2022

Revisions

Date 05-03-2022
Designed TLM
Drawn TLM

TREE PRESERVATION

JOHNSON - REILAND
616 HIGHWAY 3
DUNDAS, MINNESOTA 55019

ENSCONCED WOODS
CHASKA, MINNESOTA

T6 OF 6

01-PLAN-120158-SHEET-TREE.DWG

© 2022 Pioneer Engineering, P.A.

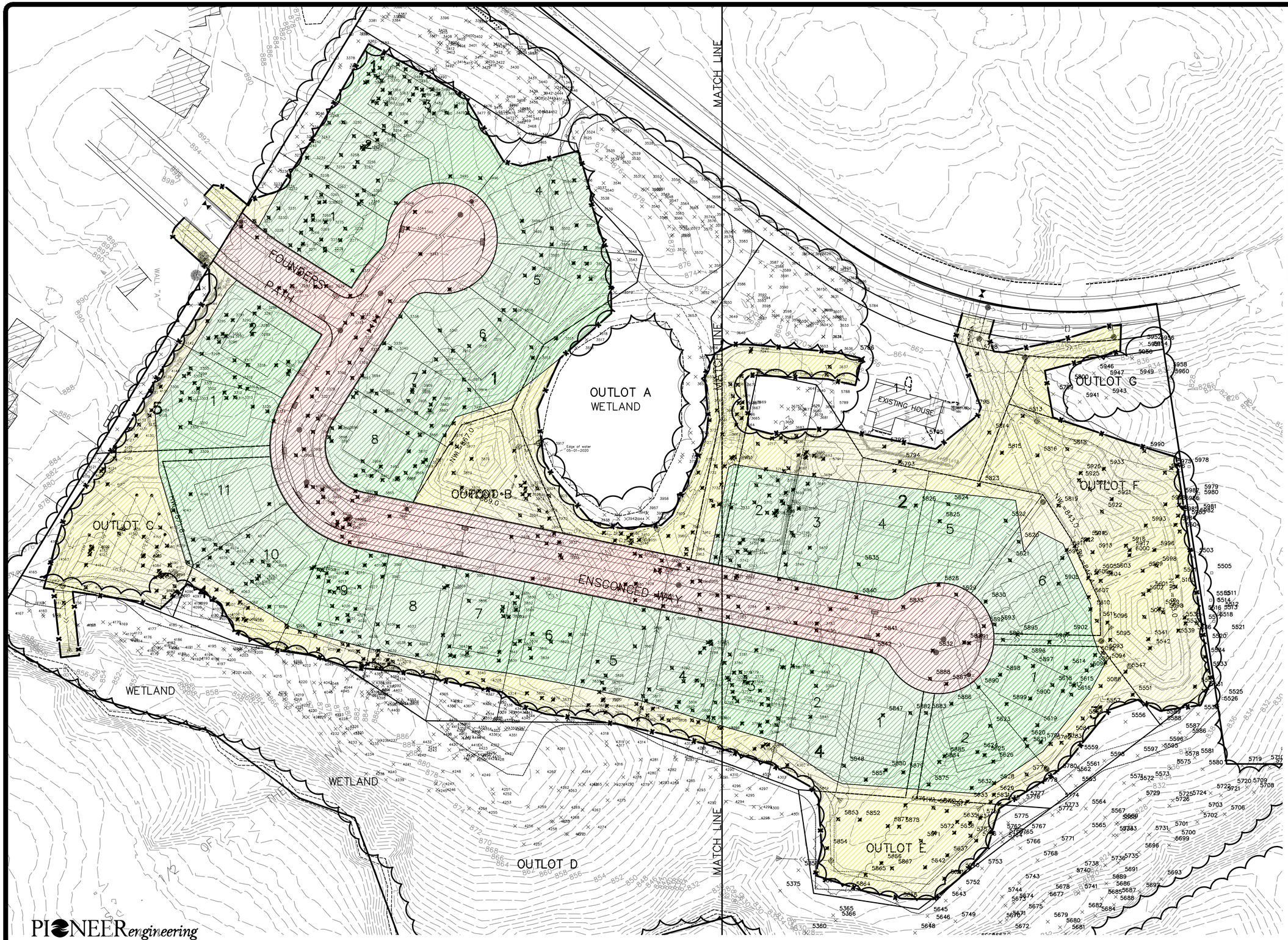

01-PLAN-120158-SHEET-TREE.DWG

PIONEER engineering
CIVIL ENGINEERS LAND PLANNERS LAND SURVEYORS LANDSCAPE ARCHITECTS

2422 Enterprise Drive
Mendota Heights, MN 55120
(651) 681-1914
Fax: 681-9488
www.pioneereng.com

I hereby certify that this plan was prepared by me or under my direct supervision and that I am a duly Licensed Landscape Architect under the laws of the State of Minnesota

Name Jennifer L. Thompson
Reg. No. 44763 Date 5-3-2022

Revisions

Date 05-03-2022
Designed TLM
Drawn JHM

TREE PRESERVATION

JOHNSON - REILAND
616 HIGHWAY 3
DUNDAS, MINNESOTA 55019

ENSCONCED WOODS
CHASKA, MINNESOTA

E1 OF 2

© 2022 Pioneer Engineering, P.A.

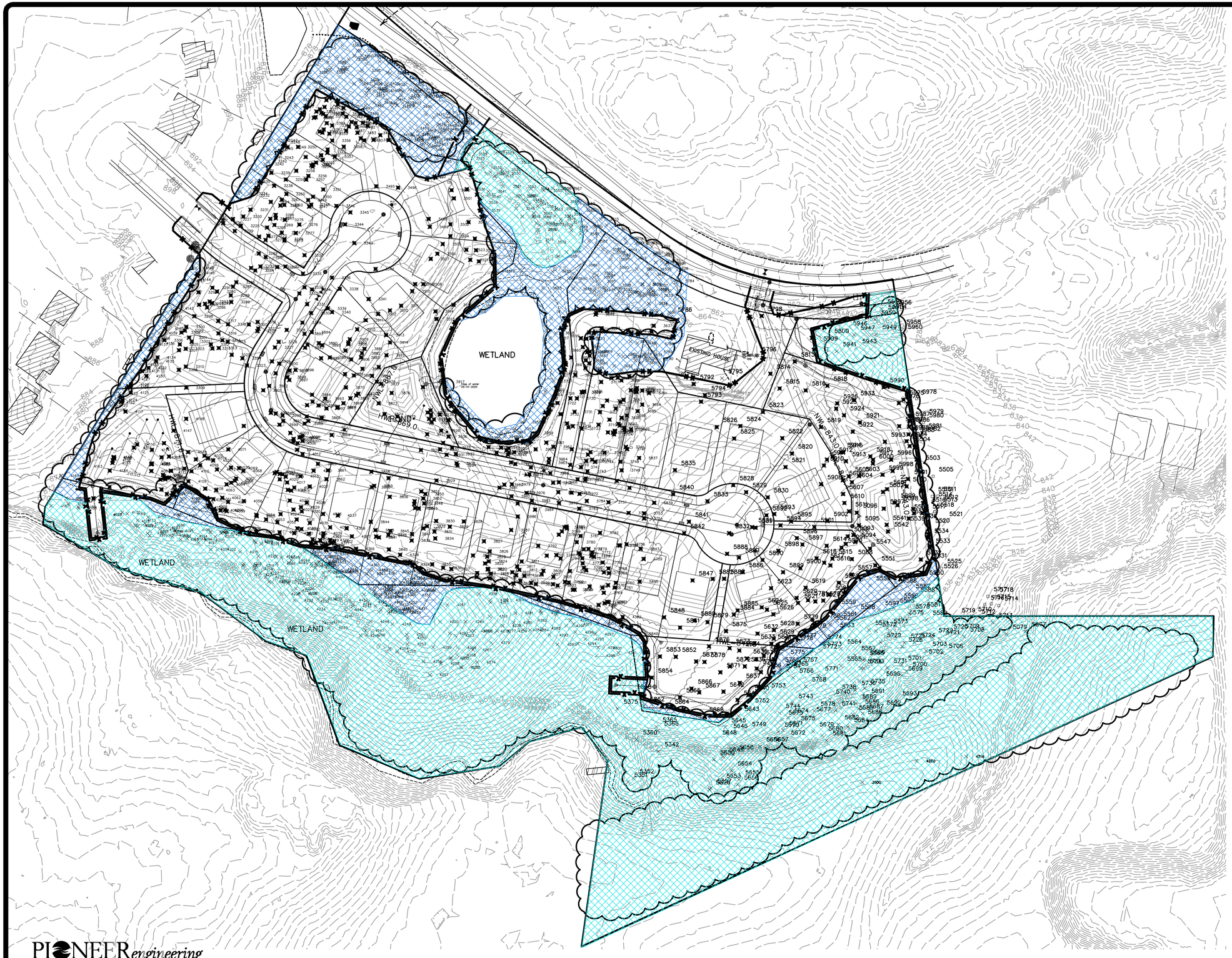

01-PLAN-120158-SHEET-TREE.DWG

PIONEER engineering

CIVIL ENGINEERS LAND PLANNERS LAND SURVEYORS LANDSCAPE ARCHITECTS

2422 Enterprise Drive
Mendota Heights, MN 55120

(651) 681-1914
Fax: 681-9488
www.pioneereng.com

I hereby certify that this plan was prepared by me or under my direct supervision and that I am a duly Licensed Landscape Architect under the laws of the State of Minnesota

Name Jennifer L. Thompson
Reg. No. 44763 Date 5-3-2022

Revisions

Date 05-03-2022
Designed TLM
Drawn TLM

TREE PRESERVATION

JOHNSON - REILAND
616 HIGHWAY 3
DUNDAS, MINNESOTA 55019

ENSCONCED WOODS
CHASKA, MINNESOTA

E2 OF 2

© 2022 Pioneer Engineering, P.A.

REQUEST FOR ACTION
CHASKA PLANNING COMMISSION
06/08/2022

Subject: **Oak Creek – Final Plat**

Applicant: DR Horton

Location: North of Engler Boulevard/Co Rd 10, west of Clover Preserve Drive

Case No.: 2022-39

Synopsis: Applicant seeks to obtain approval of a final plat for 57 lots

Prepared By: Elizabeth Hanson

Staff Recommendation: Motion to recommend approval

BACKGROUND

At its May 15, 2000 City Council meeting the Clover Ridge Concept Plan was approved. The Concept Plan showcased an assortment of housing and densities throughout the development, which included the portion of Kelzer's site that is being looked at tonight.

In July of 2002 the Final Plat for Clover Preserve 2nd Addition was approved, which encompassed the lots on Sophia Drive and a street stub that ended at the Chaska-Laketown Township border. Several signs were put along the edge of Sophia Drive and Kelzer's land to inform residents that the area will be developing.



In May 2018 the concept plan for Sagewood was approved, which encompassed the 1st and 2nd additions. The 1st and 2nd additions were the extension and termination of Clover Field Circle, and the extension of Clover Preserve Lane up to the western border of Chaska abutting Laketown Township. The Final Plat for Sagewood was approved in October 2018, and the final plat for Sagewood 2nd was approved in April 2019.

In May 2020, the original concept plan for Sagewood 3rd was approved that showed the westerly extension of Clover Preserve Lane and Sophia Drive into the orderly annexation area of Laketown Township. 83 lots on approximately 42 acres were shown in this concept plan. Concerns were raised regarding development access, traffic, tree preservation, and school capacity. The developer was specifically asked to explore more development access opportunities. A copy of the May 2020 Concept Plan is shown on the next page.



May 2020 Concept Plan

In December 2021, a revised concept plan of Oak Creek (fka Sagewood 3rd addition) was approved, which included a 107-lot development on 52 acres of land, plus the inclusion of a 162-unit apartment building (Clover Field Apartments) on Clover Ridge Drive. Oak Creek was approved as a single-family development on both the Kelzer property and a portion of the Chaska Investment property. The apartments were proposed entirely on the Chaska Investment property. A new road extension was also shown to connect into Clover Ridge Drive across from Romeo Court that would provide an additional means of ingress/egress out of the single-family development, which was reactionary to the comments received during the May 2020 review. The December 2021 Concept Plan showed both projects reviewed together so that the property owners/developers could get an understanding of how a road extension could fit into the context of the future multi-family site where Clover Field Apartments was proposed.

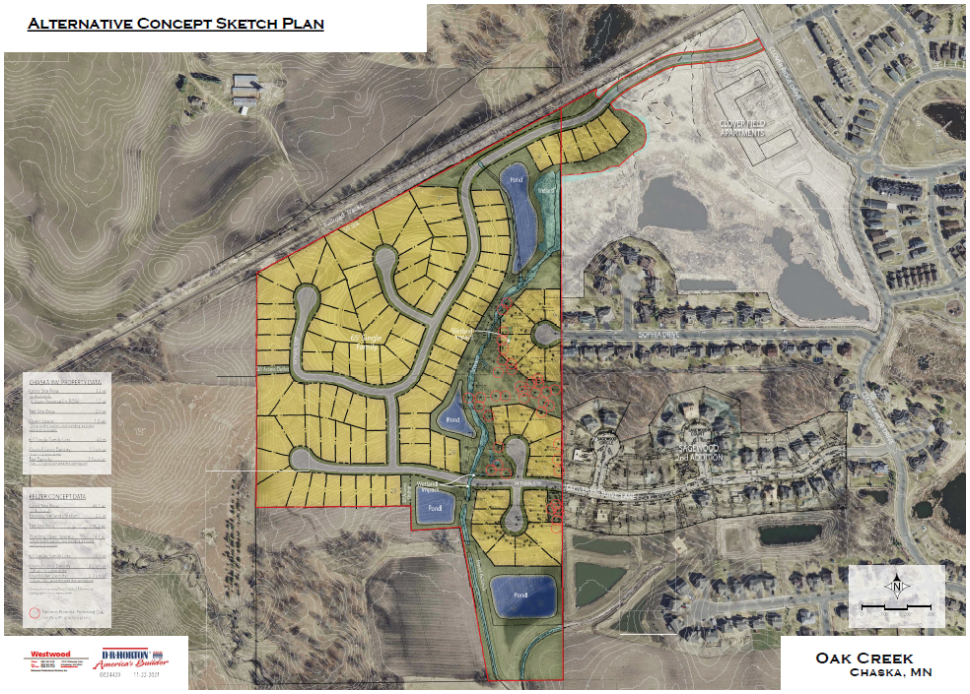

December 2021 Concept Plan

In April 2022, the preliminary plat and rezoning were approved for Oak Creek. The preliminary plan showed a proposal for 102 single-family lots on approximately 52 acres.



April 2022 Preliminary Plan

Because the Kelzer property was located in the orderly annexation area of Laketown Township, it was required that this property be annexed into Chaska prior to preliminary plans being approved. The property has since been annexed as of March 2022.

CHANGES SINCE APRIL 2022 PRELIMINARY PLAN
The following changes have occurred since the April 2022 preliminary approvals:

- Tree Preservation; a site visit with the developer and City Staff (including the City's certified arborists) occurred on May 24, 2022 to evaluate saving more trees. 8 additional trees above the April 2022 preliminary plan were identified to be preserved; 3 that were revised on the plans prior to the site visit and 5 more that were revised after the site visit. The final plan is showing preservation of those 8 additional trees (mostly oaks). These additional trees are mainly situated in the rear yards of the lots and the areas in the outlots (see below in green).

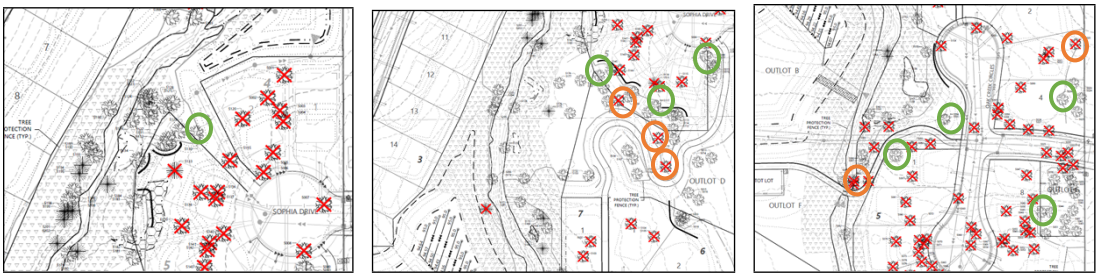

In addition, City staff did identify 5 trees within the preservation areas that were deemed harzardous to the development. It was recommended that these trees be removed as they will be a danger to the area in the near future (see above in orange). These trees were either dead or had large burrows in them that deemed a potential fall hazard. It is typical for the City to evaluate trees within a development (typically after development grading occurs) to look for potential hazards. The City had an earlier look this time and noted such hazards. The City will have an additional look once grading occurs so that the area is safe for everyone.

- Jonathan & Homeowners Assocation; the developer and Jonathan have concluded that the development will be a part of the Jonathan Association.
- Added Pedestrian Connections; the developer has added a sidewalk to the north side of Oak Creek Drive up to Clover Ridge Drive. In addition, they have added a sidewalk on the north cul de sac of Oak Creek Circles that will provide a continuous connection from the trail along the park space and the trail to connect to Sophia Drive. The City, Jonathan Association and developer have revisited the potential in adding a pedestrian connection across the creek to connect Sophia Drive with the west side of the development. At this time there is not a pedestrian connection shown, for the reasons that the Jonathan Association feels there are already adequate connections existing and proposed as they will be the ultimate owners of such within Oak Creek. The cost of the bridge both for installation and future maintenance also does not outweight the benefit of gaining that connection. The City would still encourage that the connection be preserved within the development, so that if in the future if a connection is warranted by the Jonathan Association then there is space to do so. The developer and Jonathan would have to come to an agreement on whether or not that is something they wish to pursue.

Neighborhood Meeting November 18, 2021:
DR Horton and Chaska Investments conducted a neighborhood meeting for their concept plan on November 18, 2021. In sum, there were concerns on traffic, access, and building height for the apartments.

Project Goals
The goals of the Oak Creek project include the following:

- Providing a seamless transition of road and pedestrian connections
- Housing design and lot sizes that will complement the existing 2-story homes on larger lots
- Creating a neighborhood layout that is sensitive to the existing conditions, including availability of utilities, natural grades and drainage patterns
- Preservation of trees and buffer to existing homes.
- Enhancement of a small community feel

Comprehensive Plan & Clover Ridge Concept Plan
The Comprehensive Plan guides these areas to be Low Density Residential. The proposal tonight is consistent with this guidance. The Clover Ridge concept plan also guided this area to be standard lot residential, which the proposal is consistent with. The Clover Ridge neighborhood was approved in May 2000. In September of 2002 it was amended to show that the Kelzer site to the south would be developed for Employment (ie. Business Park), and the Kelzer site to the west would be developed for Low Density Residential as shown in the red outline of the attached Clover Ridge Concept Plan. This amendment was due as a result of an assessment agreement between the City and the Kelzer family. The delineation of this low-density residential area was dictated by the sewer capacity that could reach those limits. See sewer plan above for reference.

<u>Use of the Comprehensive Plan</u>
The primary use of the Comprehensive Plan is to be a general policy document for future growth and development within the City. Comprehensive Plan's are not binding, but rather guiding tools when development comes in. Chaska's Comprehensive Plan is intended to be flexible and responsive to changing conditions. It needs to be continually referenced, updated, and used as a guide. It functions as an overall course or path, and is intended to provide direction, rather than dictating specific activities or precise decision-making.

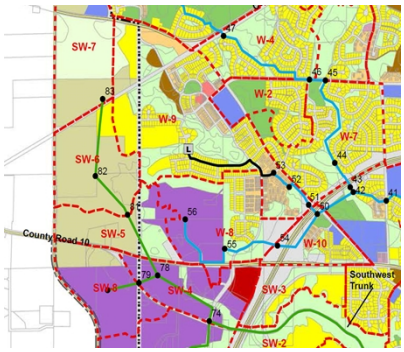

Sewer Plan

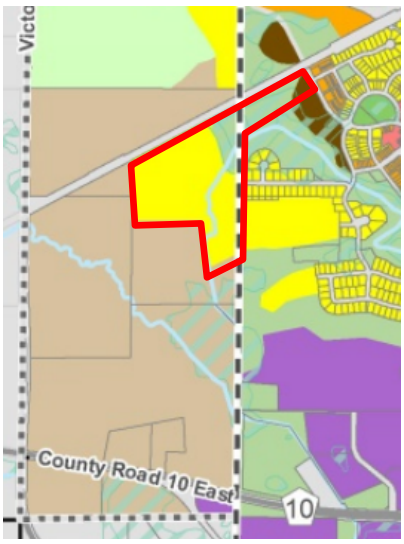

Excerpt from 2040 Land Use Plan

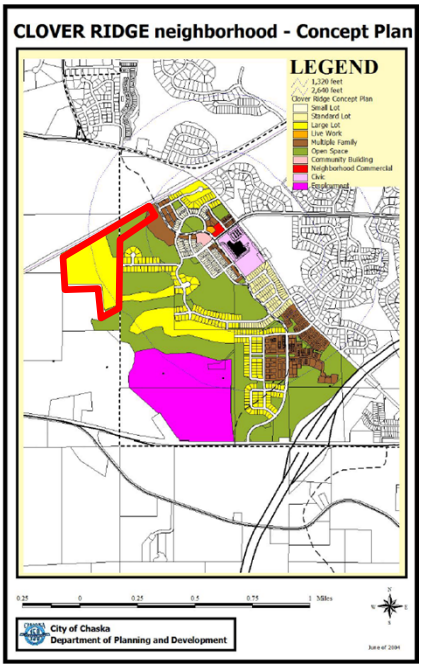

To that end, when development comes in, plans are looked at more closely and with more technical information to understand the raw details of a specific site (developability vs non-developability). The details that emerge from plans (i.e. wetland and wooded steep slope delineations) may differentiate from the layout/lines of the Comprehensive Plan. It is common, if not practical, that sites layouts, and lines, may change slightly from what the Comprehensive Plan shows based on what technical information reveals. Comprehensive Plans are not binding for that reason.

As it relates to this project, the Comprehensive Plan shows that the subject area is guided to be Low Density Residential and Open Space. The developer has completed a wetland delineation report that reviewed the wetlands on site. The conclusion of this report showed that there were buildable areas where the Comprehensive Plan showed Open Space. This would be an example of technical data differentiating from the layout of the Comprehensive Plan.

CURRENT PROPOSAL

Final Plat is being requested for the Oak Creek project, which will be the first phase of two (at full build out there will be 102 lots). The first phase, 57-lots, of the Oak Creek proposal is located north of Engler Boulevard/County Road 10 and west of Clover Preserve Drive and Sophia Drive. This area is now considered to be a part of Chaska and no longer in the orderly annexation area of Laketown Township as of March 2022.

The 57 lots will encompass the northeasterly lots along Oak Creek Drive up to Oak Creek Pass and the two cul de sacs off of Clover Preserve Lane (known as Oak Creek Circles). The Sophia Drive cul de sac and west side of the development will be completed in the second phase of the development and will come back for final plat later.

Adjacent properties

The site is bound on the north by the Twin Cities & Western railway and Steve Kelzer's farm property; to the west by Victoria Drive (CR 11), the Brose family farm and the remaining portion of Kelzer's land; the south by Kelzer's farmland, land owned by Cal Haasken, and the homes on Sophia Drive; the east by residential in Clover Ridge and Sagewood.

Existing Conditions

The nearly 50-acre site is located to the west of the Sagewood and Clover Preserve neighborhoods and south of the Twin Cities & Western Railroad line. The site is currently used for agricultural purposes. The site naturally drains to the creek located along the west side of the side and ultimately off-site to the south.

The southerly portion of the Kelzer Property contains an area of trees. A tree survey indicates approximately 216 trees of varying sizes and species that are evenly distributed throughout. The majority is Oak. The remaining species include a combination of Cedar, Basswood, Ash and Elm among a few others. The average size of these trees are averaging around 20-35 inches in caliper. There is also a 'Heritage Tree' noted on the southwest corner of the site outside of the development area. This tree has been noted as one of the oldest trees in the community, and plans to remain.

Poor soils were noted on the southerly most tip of the subject site. Because of this the developer will be looking at this area for ponding.

A Notice of Determination of wetlands on the Kelzer Property was received November 2019 and it was determined that there are 10 wetlands on the site. The wetlands range in size from 158 sq. ft. to 21,953 sq. ft. A small creek also transverses the site from north to south. A Notice of Determination of wetlands for the access area on the Chaska Investment Property was received November 2020. This site contains a large wetland complex with various upland areas. Impacts to the wetlands are due to the new access road, Oak Creek Drive.

Land Use

The proposed Oak Creek final plat consists of 57 single family lots with a typical lot size of 65 feet wide by 140 feet deep. Minimum setbacks are proposed to be consistent with those approved for Clover Preserve and Sagewood: front setback of 26 feet, side setback of 5 feet, corner lot side setback of 26 feet and rear yard setback of 20 feet.

The parcels of land that the Oak Creek project encompasses is currently zoned Planned Residential Development (PRD-85).

Layout

The overall neighborhood will be accessed from a new road, called Oak Creek Drive by the intersection of Clover Ridge Drive and Romeo Court. Clover Preserve Lane will be extended up to the creek and include 13 homesites. Sophia Drive will be constructed with a cul de sac and include 5 homesites. Trails will be constructed at the ends of both Clover Preserve and Sophia to provide pedestrian connectivity.

A private neighborhood park is planned for the site in a location that is west of the creek. Park amenities will include a play structure and seating. This will be owned by the Jonathan Association

There are a number of site conditions that were reviewed and considered in the layout of Oak Creek. These include:

- Site Access. As revised from the 2021 concept plan, access is being created from Clover Ridge Drive parallel with the rail line now known as Oak Creek Drive. Additionally, Sophia Drive will terminate in a cul de sac and provide access to 5 lots. Clover Preserve Lane will terminate into two cul de sacs and provide access to 13 lots.

- Existing Terrain and Creek. The site naturally drains to the creek located along the west side of the side and ultimately off-site to the south. It is this feature that influenced the design of separate north and south areas with ponding located throughout the site.

- View sheds. The topography of the site is such that the north portion sits higher than the south. This creates open sight lines to the south and west. The design takes advantage of this feature by providing a majority of the homes with desirable views. Those homes that face the north or east will benefit from the pond or wooded views.

- Tree Preservation. There is a large grove of trees located in the south area of the site. The site layout is sensitive to this feature and therefore accommodates preservation of trees. A more detailed analysis of tree preservation is provided in the tree preservation portion of this report.

- Utilities. Water & sewer is stubbed to each access point on the east. The site's layout is influenced by the extension of these utilities. A sanitary sewer lift station will be needed to serve this site. The final location of the lift station is oriented on the west side of the proposed tot lot.

- Railroad. The Twin City and Western Railroad has a set of tracks along the north boundary of the site. Additional buffer and setback for lots that back the railroad tracks will be provided. Due to the grade differential adjacent to the tracks, varying approaches to screening will include berming and landscaping.

- Farm Access. Currently, the land owner accesses the site for farming via a driveway over the railroad tracks. Upon development of the northerly portion of the site, farm access will be rerouted through the public road system to access the southerly & westerly retained parcels; shown as Outlots E & L on the proposed plat.

Transportation/ROW/Construction Traffic

The plan proposes to provide for a network of internal residential roadways with connectivity to arterial roadways. Specifically, Clover Preserve Lane is extended to the west to provide access to two cul de sacs that access 13 lots. In addition, a new development access is proposed from Clover Ridge Drive, parallel with the railroad, that will connect into the internal road system of Oak Creek now known as Oak Creek Drive.

The current plan appears to show road right-of-way widths (54 feet) that are consistent with the designs in the existing Clover Ridge and Sagewood developments, which is smaller than the City's typical 60 foot wide ROWs. City crews have evaluated this change in the 1st and 2nd additions of Sagewood and have determined that the 54 foot wide ROW is acceptable to carry through and provide more of a seamless approach to the existing neighborhoods.

A traffic study has been completed for this development. The traffic study found that Schoolmaster Drive currently operates near the maximum trips per day for a Local Street as classified in the City's Comprehensive Plan and by the Metropolitan Council. In response to access and traffic, Oak Creek is being proposed with one access, Oak Creek Drive. The new access road connects to Clover Ridge Drive, which is classified as a collector road. The goal in creating the northerly connection is to encourage traffic to use the collector road system within the surrounding neighborhood and reduce the impact on the local streets.

Construction access will enter and exit from Pioneer Trail to the north. Construction traffic will be precluded from going south on Clover Ridge Drive per the developer's construction access plan. The developer will have to continue working with the existing neighbors on Sophia Drive and Clover Preserve Lane about how construction traffic will use these roadways for the homes proposed on these roadways.

Utilities
Sewer and water utilities are available. Water and sewer are stubbed to each access point on the east. The site's layout is influenced by the extension of these utilities. A sanitary sewer lift station will be needed to serve this site. The final location of the lift station is planned to be on the west edge of the tot lot.

Stormwater
Stormwater ponding is proposed as a part of this proposal on the south side of the site, center of the site just west of the creek, and north of the site. It will be required that the developer provides adequate maintenance access into these areas. Stormwater ponding will have to meet all Carver County WMO and City standards.

Phasing
The site is planned to be graded in its entirety beginning Spring 2022. The 1st phase will be the northeasterly portion of the site to construct Oak Creek Drive as well as the southeasterly portion to extend utilities from Clover Preserve Lane (Sagewood 2nd Addition). The 1st phase will consist of approximately 57 lots with the remaining 45 lots being constructed in the 2nd phase. Street and utility construction of the 1st phase will be Summer with home construction beginning Fall 2022. Dependent on market conditions, the 2nd phase of development is planned to occur in 2023.

Setbacks
The setbacks will be consistent with Sagewood 1st and 2nd. Namely, the front yard setback should be no less than 26 feet. The rear yard setback should be 20 feet. The side yard setback should be 5 feet. Corner lots should have a side yard setback of 26 feet.

In addition to these setbacks, there are other setbacks that may apply to this site. See below:

SETBACKS	
Direction	**Setback**
Wetlands	30 feet
Railway	50 feet

Architecture
DR Horton will be the sole builder in this development. The proposed homes will be 2-story single family designs, which are like those in the current Sagewood neighborhood. DR Horton anticipates offering approximately 7 floor plans ranging in size from 1,900 to 3,400 square feet. Each floor plan will have multiple elevation options, which will create variety throughout. Pricing will also be similar to homes in Sagewood, starting in the lower to mid $500,000s. A sample of the home designs accompany this application.

City ordinance dictates that housing may not be similar within two houses to each side, directly across the street or diagonal from the house in question. This ordinance has been very successful in the recent past with the result of neighborhoods with varied housing design and architecture.

The following lots were subject to 360 degree architecture per the final plat drawing of Oak Creek:

- Lots 1 & 6, Block 1
- Lots 7 & 20, Block 2
- Lot 1, Block 3
- Lot 1, Block 4
- Lots 1 & 8, Block 5
- Lot 4, Block 6



Trails & Sidewalks

There are no public trails proposed as a part of this development nor are there trails called out for this area in the Comprehensive Plan. Because of this the developer will be required to pay trail fees, which will be wrapped into the Developer's Agreement. There will be a couple private trail sections included within the development; one that will connect the lots on Clover Preserve Lane to the lots to the west; and one trail that will connect the lots on Clover Preserve Lane to the Sophia Drive. The trail connection between Sophia Drive and Clover Preserve Lane is the developer's intent to meet the City's comment regarding providing a faster pedestrian connection for the westerly Oak Creek lots to access Clover Ridge Elementary. This option was explored as being the least impactful in terms of a crossing and preserving trees. Staff would still argue that the most direct and functional connection would be a bridge crossing between the Sophia Drive cul de sac and the westerly Oak Creek lots across the creek. As noted above, there is not a pedestrian connection shown for the reasons that the Jonathan Association feels there are already adequate connections existing and proposed. The City would still encourage that the connection be preserved within the development, so that if in the future if a connection is warranted by the Jonathan Association then there is space to do so. The developer and Jonathan would have to come to an agreement on whether or not that is something they wish to pursue.

The plan is proposing to include sidewalks. The developer will be required to provide sidewalks on both sides of the streets up to the bulbs of cul de sacs per City policy. A sidewalk connection is proposed for the full length of the south side of Oak Creek Drive out to Clover Ridge Drive. The sidewalk will ultimately turn into the regional trail once it hits the apartment site. The north side of this street is also showing a sidewalk. If the bridge crossing between Sophia Drive and the westerly Oak Creek lots can be achieved as noted above, then the sidewalk on the north side of Oak Creek Drive could be eliminated.

Screening, Landscaping & Tree Preservation

Because this development abuts the Twin Cities and Western railway on its northern edge it will be important that the homes that back up to this use have adequate screening. Typically a mix of deciduous and coniferous trees with a level of berming is the best practice adjacent to railways. The applicant has shown in their plans that a mix of berming in some sections and mainly coniferous trees will be installed along this edge. In addition they are incorporating a 6 foot privacy fence along the residential edge.

Trees will be required in the boulevard in order to meet the City's Boulevard Tree Policy. It should be noted that the boulevard is the area between the sidewalk and the street.

Tree Preservation is an important piece of this development, specifically in the southeast area where significant trees are present. The applicant has conducted a tree survey. As noted previously, there are 216 trees surveyed which are mainly oak trees ranging from 20-35 inches in caliper. 106 of the trees surveyed will be preserved, which totals 2,468 caliper inches; 110 removed, which totals 2,142 caliper inches. Between the Concept Plan in 2021 and the Preliminary Plan in April 2022 the developer saved 12 more trees on their preservation plan. From preliminary plan to now the developer has included 8 more trees to be saved on their preservation plan.

In addition, City staff did identify 5 trees within the preservation areas that were deemed hazardous to the development. It was recommended that these trees be removed as they will be a danger to the area in the near future (see above in orange). These trees were either dead or had large burrows in them that deemed a potential fall hazard. It is typical for the City to evaluate trees within a development (typically after development grading occurs) to look for potential hazards. The City had an earlier look this time and noted such hazards. The City will have an additional look once grading occurs so that the area is safe for everyone.

As with Sagewood 1st and 2nd additions, the tree preservation areas are proposed to be in an outlot containing a Conservation Easement and owned by the homeowners' association. There are other trees that sprinkle the yards of some of the lots that will also be preserved and incorporated into an easement area.

It should be noted that there is a cottonwood tree on the southwest tip of the subject site that has been deemed as one of the City's oldest cottonwood trees; it is pictured in the image on this page and is located just south outside the project limits. The developer has stated that this tree is not incorporated into the development and will remain preserved.

Private Amenity Area
A private neighborhood amenity area is planned for the site in a central location on the west side of the creek. Private amenities will include a play structure and seating.

Although this plan is proposing their own amenities, it will still be required of the developer to pay park dedication fees since the area proposed will be private.

Jonathan Association
During the reviews of Sagewood 1st and 2nd additions it was discussed whether or not Sagewood would be incorporated into the Jonathan Association, which is a Homeowners Association that encompasses the area over Clover Ridge. At that time the developer had the choice of either opting to be in the Association or create their own and provide their own private amenity area. The developer opted for their own private amenity area and the creation of their own Homeowners Association. As this new extension from the Sagewood development is mostly in the former orderly annexation area of Laketown Township, it is not required to be a part of the Jonathan Association by location. However, the developer and Jonathan Association have concluded that Oak Creek will be a part of Jonathan. With that said, Jonathan will be the

owners/maintainers of the tree preservation areas, trails, park area, boulevard trees and signage.

Annexation
The subject site was formerly located in the orderly annexation area of Laketown Township. This orderly annexation area was put in place in the 1980's to have zoning control over the areas that will be added to the City of Chaska in the future. The developer and City have completed the annexation process as of March 2022 and the area is now a part of the City of Chaska.

Development Costs (Infrastructure Improvements)
The City of Chaska has a number of area-wide development cost such as, but not limited to:

- Storm Sewer
- Trails
- Parks

Prior to final platting, the developer will need to work with City Staff to determine which of these are applicable and what those fees will be.

Final Plat
The site will be platted into 57 lots for the development site. The following are the proposed outlots and their dispositions:

- Outlot A: open space to be owned by the HOA
- Outlot B: wetland, ponding, and open space to be deeded to the City of Chaska
- Outlot C: future development to be owned by the developer
- Outlot D: tree preservation area to be owned by the HOA
- Outlot E: farm access to be retained by the property owner (Kelzer's)
- Outlot F: tot lot and trail to be owned by the HOA
- Outlot G: tree preservation area to be owned by the HOA
- Outlot H: wetland, ponding, and open space to be deeded to the City of Chaska
- Outlot I: farmland to be retained by the property owner (Kelzer's)
- Outlot J: farmland to be retained by the property owner (Kelzer's)
- Outlot K: future development to be owned by the developer
- Outlot L: farm access and farmland to be retained by the property owner (Kelzer's)
- Outlot M: farmland to be retained by the property owner (Kelzer's)
- Outlot N: farmland to be retained by the property owner (Kelzer's)

Deadline for Agency Action
The City of Chaska received the complete application for this request on May 25, 2022. Pursuant to Minnesota State Statutes the City must act on this request by **Sunday, July 24, 2022 (60 days)**, unless the City provides the petitioner with written reasons for an additional 60-day review period. The additional review period would extend to Thursday, September 22, 2022. The City may with the petitioner's consent extend the review period beyond the Thursday, September 22, 2022 date. Lastly, if the City denies the petitioners request "… it must state in writing the reasons for the denial at the time it denies the request."

PLANNING COMMISSION ACTION REQUESTED:

Motion to recommend to City Council approval of the Final Plat for 57 lots for Oak Creek, subject to the following conditions:

1. Approvals shall be based on the following graphic exhibits:
    a. Narrative (pgs 1-2), prepared by DR Horton, dated May 25, 2022
    b. Final Plat (pgs 1-4), prepared by Westwood
    c. Cover, prepared by Westwood, dated May 24, 2022
    d. Overall – North, prepared by Westwood, dated May 24, 2022
    e. Overall – South, prepared by Westwood, dated May 24, 2022
    f. Sanitary Sewer and Watermain Construction Plan (pgs 4-9), prepared by Westwood, dated May 24, 2022
    g. Storm Sewer and Street Construction (pgs 10-14), prepared by Westwood, dated May 24, 2022
    h. Backyard Storm Sewer (pgs 15-16), prepared by Westwood, dated May 24, 2022
    i. Intersection Details, prepared by Westwood, dated May 24, 2022
    j. Typical Street Sections, prepared by Westwood, dated May 24, 2022
    k. Details (pgs 19-27), prepared by Westwood, dated May 24, 2022
    l. Lift Station Details, prepared by Westwood, dated May 24, 2022
    m. Cover, prepared by Westwood, dated May 24, 2022
    n. Overall Grading Plan, prepared by Westwood, dated May 24, 2022
    o. Grading Drainage & Erosion Control (pgs 3-6), prepared by Westwood, dated May 24, 2022
    p. Topsoil Management Plan, prepared by Westwood, dated May 24, 2022
    q. Typical Street Sections Pond Overflow Details, prepared by Westwood, dated May 24, 2022
    r. Typical Lot Sections, prepared by Westwood, dated May 24, 2022
    s. Street Profiles (pgs 10-12), prepared by Westwood, dated May 24, 2022
    t. Details (pgs 13-14), prepared by Westwood, dated May 24, 2022
    u. Overall Tree Preservation Plan, prepared by Westwood, dated May 24, 2022
    v. Tree Preservation Plan (pgs 16-18), prepared by Westwood, dated May 24, 2022
    w. Tree Preservation Plan & Data, prepared by Westwood, dated May 24, 2022
    x. Cover, prepared by Westwood, dated May 2, 2022
    y. Overall Landscape Plan, prepared by Westwood, dated May 2, 2022
    z. Landscape Plan (pgs 3-5), prepared by Westwood, dated May 2, 2022
    aa. Landscape Plan – Notes – Details, prepared by Westwood, dated May 2, 2022
    bb. Landscape Details, prepared by Westwood, dated May 2, 2022
2. Adherence to the City's Boulevard Tree Policy and local street section design.
3. Provision that boulevard trees are placed between the sidewalk and street.
4. Provision that boulevard trees are placed throughout the entire boulevard, including corner lot areas, to meet the Tree Policy.
5. Provision of sidewalks on both sides of all local streets.
6. Adherence to the following building setbacks for Oak Creek:
    a. Front (house): 26 feet
    b. Front (unenclosed porch): 20 feet
    c. Rear: 20 feet
    d. Side: 5 feet
    e. Side (corner): 26 feet
7. Prior to final plat approval, developer shall enter into an agreement with the City for the provision of necessary infrastructure and associated development costs, including parkland fees.
8. Compliance with the City's anti-monotony and design requirements zoning ordinance (Section 15.28.290) for Oak Creek.
9. Provision to be setback 30 feet from edge of wetlands.
10. Provision of developer responsibility to remove any hazardous trees or limbs on site as determined by the Public Works Director, prior to issuance of a building permit.

11. Provision of a conservation easement in favor of the HOA be completed for all preserved trees.
12. Provision of a storm water management plan meeting City and Carver County WMO standards.
13. Provision that section 15.28 Special Regulations are complied with.
14. The following lots were subject to 360 degree architecture per the final plat drawing:
    a. Lots 1 & 6, Block 1
    b. Lots 7 & 20, Block 2
    c. Lot 1, Block 3
    d. Lot 1, Block 4
    e. Lots 1 & 8, Block 5
    f. Lot 4, Block 6

OAK CREEK

Final Plat
5/25/2022
Chaska, MN

The Final Plat for Oak Creek is consistent with the approved Preliminary Plat.

CONSTRUCTION

Construction access will be mainly from the new road – the intersection of Oak Creek Drive & Clover Ridge Drive. However, access from both Sophia & Clover Preserve will be necessary to complete development of the lots and construction of homes on those streets.

The site will be graded in its entirety in 2022. The 1st phase will consist of 57 lots and include Oak Creek Drive up to Oak Creek Pass and the extension of Clover Preserve Lane. The Sophia Drive cul de sac will be completed with the 2nd phase.

PRELIMINARY PLAT DISCUSSION

The below were items of discussion or concern at the time of Preliminary Plat approval.

1. Homeowners' Association. Oak Creek will be part of The Jonathan Association. Association documents will be finalized prior to home sales. Jonathan will own and maintain the neighborhood entry monument as well as the playground. Additionally, Jonathan will own Outlots D and G which will contain trails and be subject to a conservation easement similar to what was provided in Sagewood.

2. Tree Preservation. Following the site review with staff on Tues May 24th, an additional 5 significant tress will be saved.

3. Conservation Easement. Like Sagewood, a conservation easement will be placed on Outlots D and G in favor of the City of Chaska for tree preservation. Additionally, we will provide conservation easements over those portions of Lots 1, 2 and 4, Block 6, OAK CREEK with preserved trees. The same will occur in the 2nd phase when the Sophia Drive lots are developed.

4. Sophia Pedestrian Connection/Creek Crossing. Horton has explored providing a bridge over the creek to provide more direct access for the easterly homes. It is our opinion that the cost to provide a bridge outweighs the benefit. The accompanying map shows the distance to walk to school from the furthest street in Oak Creek. A pedestrian bridge to Sophia creates a shorter distance of just 0.1 mile (or 528 feet) over using the northerly or southerly sidewalk/trail systems.

   The estimated cost to construct the bridge is over $200,000, which is also a replacement cost that gets passed on to the homeowners in the future.

5. Farm Access & Railroad Crossing. Farm access is being provided via Outlots E and L that will be owned by the Kelzer Family. The Kelzers are working directly with the railroad to secure access across the tracks. This is not part of nor will it be constructed as part of Oak Creek.

6. Railroad Review. Twin Cities and Western Railroad has reviewed and provided concurrence of our plans and future disclosure language.

OAK CREEK

PLAT FILE NO.
C.R. DOC. NO.

KNOW ALL PERSONS BY THESE PRESENTS: *That Kelzer Family Limited Partnership, a Minnesota limited partnership, owner of the following described property situated in the County of Carver, State of Minnesota, to wit:*

That part of the following described property lying northerly of the northerly right of way line of the Chicago, Milwaukee, St. Paul and Pacific Railway:

All that part of the North Half of the Northeast Quarter (N 1/2 of NE 1/4) of Section 36, Township 116, Range 24, lying Southerly of the Northerly boundary line of the old right of way of the Hastings and Dakota Railway Co. as located prior to the year 1912, and described by metes and bounds, as follows: Beginning at the Northeast corner of said Section 36, running thence South 89 degrees 40 minutes 11 seconds West, assumed bearing along the north line of said North Half of the Northeast Quarter, a distance of 330.00 feet to a point on the Northerly boundary line of said right of way; thence South 51 degrees 40 minutes 11 seconds West along said boundary line 1138.00 feet; thence South 61 degrees 22 minutes 40 seconds West continuing along said boundary line 1354.21 feet to a point on the south line of said North Half of the Northeast Quarter, said point being 236.00 feet East from the southwest corner of said North Half of the Northeast Quarter; thence East along the South line of said North Half of the Northeast Quarter to the southeast corner of said North Half of the Northeast Quarter; thence North along the east line of said North Half of the Northeast Quarter to the place of beginning.

AND

That part of the Southeast Quarter of the Northeast Quarter in Section 36, Township 116, Range 24, Carver County, Minnesota, described as follows:

Commencing at the southeast corner of said Southeast Quarter of the Northeast Quarter; thence South 89 degrees 10 minutes 49 seconds West, assumed bearing along the south line of said Southeast Quarter of the Northeast Quarter, a distance of 325.00 feet to the point of beginning; thence North 10 degrees 07 minutes 35 seconds West, a distance of 631.36 feet; thence North 58 degrees 21 minutes 39 seconds West, a distance of 264.20 feet; thence South 89 degrees 25 minutes 26 seconds West, a distance of 670.04 feet to the west line of said Southeast Quarter of the Northeast Quarter; thence South 00 degrees 04 minutes 45 seconds West, along said west line a distance of 767.79 feet to said south line of the Southeast Quarter of the Northeast Quarter; thence North 89 degrees 10 minutes 49 seconds East, along said south line, a distance of 1007.11 feet to the point of beginning.

AND

That part of the North Half of the Northeast Quarter in Section 36, Township 116, Range 24, Carver County, Minnesota, described as follows:

Commencing at the southeast corner of said North Half of the Northeast Quarter; thence South 89 degrees 25 minutes 26 seconds West, assumed bearing along the south line of said North Half of the Northeast Quarter, a distance of 1325.91 feet to the east line of the Northeast Quarter of the Northeast Quarter of said Section 36 and the point of beginning; thence North 00 degrees 04 minutes 45 seconds East, along said east line, a distance of 452.34 feet to the southerly right of way line of the Chicago, Milwaukee, St. Paul and Pacific Railway; thence South 61 degrees 31 minutes 42 seconds West, along said southerly right of way line,a distance of 966.76 feet to said south line of the North Half of the Northeast Quarter; thence North 89 degrees 25 minutes 26 seconds East, along said south line, a distance of 849.25 feet to the point of beginning.

KNOW ALL PERSONS BY THESE PRESENTS: *That D.R. Horton, Inc. - Minnesota, a Delaware corpoation owner of the following described property situated in the County of Carver, State of Minnesota, to wit:*

That part of the North Half of the Northeast Quarter and that part of the Southeast Quarter of the Northeast Quarter, all in Section 36, Township 116, Range 24, Carver County, Minnesota, lying southerly of the southerly right of way line of the Chicago, Milwaukee, St. Paul and Pacific Railway, EXCEPTING THEREFROM the following two parcels:

1.) Commencing at the southeast corner of said Southeast Quarter of the Northeast Quarter; thence South 89 degrees 10 minutes 49 seconds West, assumed bearing along the south line of said Southeast Quarter of the Northeast Quarter, a distance of 325.00 feet to the point of beginning; thence North 10 degrees 07 minutes 35 seconds West, a distance of 631.36 feet; thence North 58 degrees 21 minutes 39 seconds West, a distance of 264.20 feet; thence South 89 degrees 25 minutes 26 seconds West, a distance of 670.04 feet to the west line of said Southeast Quarter of the Northeast Quarter; thence South 00 degrees 04 minutes 45 seconds West, along said west line a distance of 767.79 feet to said south line of the Southeast Quarter of the Northeast Quarter; thence North 89 degrees 10 minutes 49 seconds East, along said south line, a distance of 1007.11 feet to the point of beginning.

2.) Commencing at the southeast corner of said North Half of the Northeast Quarter; thence South 89 degrees 25 minutes 26 seconds West, assumed bearing along the south line of said North Half of the Northeast Quarter, a distance of 1325.91 feet to the east line of the Northeast Quarter of the Northeast Quarter of said Section 36 and the point of beginning; thence North 00 degrees 04 minutes 45 seconds East, along said east line, a distance of 452.34 feet to the southerly right of way line of the Chicago, Milwaukee, St. Paul and Pacific Railway; thence South 61 degrees 31 minutes 42 seconds West, along said southerly right of way line,a distance of 966.76 feet to said south line of the North Half of the Northeast Quarter; thence North 89 degrees 25 minutes 26 seconds East, along said south line, a distance of 849.25 feet to the point of beginning.

AND

That part of Outlot A, CLOVER PRESERVE SECOND ADDITION, according to the recorded plat thereof, Carver County, Minnesota, described as follows:

Beginning at the northwest corner of said Outlot A; thence South 00 degrees 11 minutes 03 seconds East, assumed bearing along the west line of said Outlot A, a distance of 293.25 feet; thence North 83 degrees 57 minutes 39 seconds East, a distance of 182.59 feet; thence North 61 degrees 27 minutes 44 seconds East, a distance of 43.87 feet; thence North 89 degrees 38 minutes 44 seconds East, a distance of 31.92 feet; thence North 47 degrees 09 minutes 28 seconds East, a distance of 85.83 feet; thence North 53 degrees 36 minutes 55 seconds East, a distance of 56.48 feet; thence North 10 degrees 21 minutes 12 seconds East, a distance of 53.76 feet; thence North 22 degrees 51 minutes 51 seconds West, a distance of 46.41 feet; thence North 47 degrees 13 minutes 40 seconds West, a distance of 22.71 feet; thence North 56 degrees 59 minutes 09 seconds West, a distance of 76.82 feet; thence North 86 degrees 28 minutes 06 seconds West, a distance of 37.82 feet; thence North 42 degrees 51 minutes 33 seconds West, a distance of 27.40 feet; thence North 47 degrees 08 minutes 27 seconds East, a distance of 64.51 feet; thence northeasterly along a tangential curve concave to the southeast having a central angle of 14 degrees 23 minutes 15 seconds, a radius of 323.00 feet for an arc distance of 81.11 feet; thence North 61 degrees 31 minutes 42 seconds East, tangent to said curve a distance of 87.04 feet; thence northeasterly along a tangential curve concave to the southeast having a central angle of 25 degrees 31 minutes 09 seconds, a radius of 323.00 feet for an arc distance of 143.86 feet; thence North 87 degrees 02 minutes 51 seconds East, tangent to said curve, a distance of 127.62 feet; thence northeasterly along a tangential curve concave to the northwest, having a central angle of 25 degrees 31 minutes 09 seconds, a radius of 477.00 feet for an arc distance of 212.45 feet; thence North 61 degrees 31 minutes 42 seconds East, tangent to said curve a distance of 13.17 feet to the northeasterly line of said Outlot A; thence North 28 degrees 15 minutes 44 seconds West, along said northeasterly line distance of 54.00 feet; thence South 61 degrees 31 minutes 42 seconds West, a distance of 13.37 feet; thence westerly along a tangential curve concave to the north, having a central angle of 25 degrees 31 minutes 09 seconds, a radius of 423.00 feet for an arc distance of 188.40 feet; thence South 87 degrees 02 minutes 51 seconds West, tangent to said curve, a distance of 127.62 feet; thence southwesterly along a tangential curve concave to the southeast, having a central angle of 25 degrees 31 minutes 09 seconds, a radius of 377.00 feet for an arc distance of 167.91 feet; thence South 61 degrees 31 minutes 42 seconds West, tangent to said curve, a distance of 87.04 feet; thence southwesterly along a tangential curve, concave to the southeast having a central angle of 14 degrees 23 minutes 15 seconds, a radius of 377.00 feet for an arc distance of 94.67 feet; thence South 47 degrees 08 minutes 27 seconds West, tangent to said curve, a distance of 82.73 feet; thence North 42 degrees 51 minutes 33 seconds West, a distance of 18.54 feet; thence North 04 degrees 16 minutes 32 seconds East, a distance of 29.04 feet to the southerly right of way line of the Chicago, Milwaukee, St. Paul and Pacific Railway; thence South 61 degrees 31 minutes 42 seconds West, along said southerly right of way line, a distance of 176.32 feet to the point of beginning.

Have caused the same to be surveyed and platted as ***OAK CREEK*** *and do hereby donate and dedicate to the public for public use forever the public ways and also dedicates the easements as shown on this plat for drainage and utility purposes only.*

In witness whereof said Kelzer Family Limited Partnership, a Minnesota limited partnership, has caused these presents to be signed by its proper officers this _____ day of _____, 20_____.

KELZER FAMILY LIMITED PARTNERSHIP

By _____

Its _____

STATE OF MINNESOTA
COUNTY OF _____
The foregoing instrument was acknowledged before me this ____ day of _____, 20____, by _____ its _____ of Kelzer Family Limited Partnership, a Minnesota limited partnership, on behalf of the partnership.

_____ (Signature)

_____ (Name Printed)

Notary Public, _____ County, Minnesota

My Commission Expires _____

In witness whereof said D.R. Horton, Inc. - Minnesota, a Delaware corporation, has caused these presents to be signed by its proper officers this _____ day of _____ 20_____.

D.R. HORTON, INC. - MINNESOTA

By _____

Its _____

STATE OF MINNESOTA
COUNTY OF _____
The foregoing instrument was acknowledged before me this ____ day of _____, 20____, by _____ its _____ of D.R. Horton, Inc. - Minnesota, a Delaware corporation, on behalf of the corporation.

_____ (Signature)

_____ (Name Printed)

Notary Public, _____ County, Minnesota

My Commission Expires _____

I, Mathew J. Welinksi, do hereby certify that this plat was prepared by me or under my direct supervision; that I am a duly Licensed Land Surveyor in the State of Minnesota; that this plat is a correct representation of the boundary survey; that all mathematical data and labels are correctly designated on this plat; that all monuments depicted on this plat have been, or will be correctly set within one year; that all water boundaries and wet lands, as defined in Minnesota Statutes, Section 505.01, Subd. 3, as of the date of this certificate are shown and labeled on this plat; and all public ways are shown and labeled on this plat.

Dated this _____ day of _____, 20_____.

_____
Mathew J. Welinski, Licensed Land Surveyor
Minnesota License No. 53596

STATE OF MINNESOTA
COUNTY OF _____
This instrument was acknowledged before me on _____ by Mathew J. Welinski.

_____ (Signature)

_____ (Name Printed)

Notary Public, _____ County, Minnesota

My Commission Expires _____

CITY COUNCIL, CITY OF CHASKA, MINNESOTA
This plat of ***OAK CREEK*** *was approved and accepted by the City Council of the City of Chaska, Minnesota at a regular meeting thereof held this _____ day of _____, 20_____, and said plat is in compliance with the provisions of Minnesota Statutes, Section 505.03, Subd. 2.*

City Council, City of Chaska, Minnesota

By: _____ *By: _____*

COUNTY SURVEYOR, Carver County, Minnesota
Pursuant to Chapter 395, Minnesota Laws of 1971, this plat has been approved this _____ day of _____, 20_____.

_____
Brian Praske, County Surveyor

COUNTY AUDITOR, Carver County, Minnesota
I hereby certify that taxes payable in 20_____ and prior years have been paid for land described on this plat. Dated this _____ day of _____, 20___.

_____
Crystal Campos, County Auditor

COUNTY RECORDER, Carver County, Minnesota
I hereby certify that this plat of _____ was filed this _____ day of _____, 20_____, at _____ o'clock _____.M., as Document No. _____.

_____
Kaaren Lewis, County Recorder

Westwood
Professional Services, Inc.

OAK CREEK

PLAT FILE NO.
C.R. DOC. NO.

NW Cor of the NE 1/4 of Sec. 36, Twp. 116, Rge. 24 Fd. Carver County Cast Iron Monument

N. line of the N 1/2 of the NE 1/4 of Sec. 36

S89°40'11"W 330.00

NE Cor of the NE 1/4 of Sec. 36, Twp. 116, Rge. 24 Fd. Carver County Cast Iron Monument

N00°11'03"W 62.86

NW Cor of Outlot A CLOVER RIDGE SECOND ADDITION Fd. 1/4 Inch Open 176.32

CHICAGO, MILWAUKEE, ST. PAUL & PACIFIC RAILWAY

southerly R/W line of the Chicago, Milwaukee, St. Paul & Pacific Railroad

northerly R/W line of the Chicago, Milwaukee, St. Paul & Pacific Railroad

northerly R/W line of the Old Hastings & Dakota Railway Co.

NORTH HALF OF THE NORTHEAST QUARTER

552'W Deed)

S51°40'11"W 1138.00

N61°31'42"E 1602.73

N61°31'42"E 2646.41

1165.44

OUTLOT N

OUTLOT A

OUTLOT B

OUTLOT C

OUTLOT D

OUTLOT E

OUTLOT F

OUTLOT G

OUTLOT H

OUTLOT I

OUTLOT J

OUTLOT K

OUTLOT L

OUTLOT M

CLOVER PRESERVE SECOND ADDITION

CLOVER RIDGE DRIVE

SOPHIA DRIVE

CLOVER RIDGE PARKWAY

ROMEO COURT

S61°31'42"W 13.37

Δ=25°31'09" R=423.00 L=188.40

N87°02'51"E 127.62

Δ=25°31'09" R=377.00 L=167.91

N87°02'51"E 127.62

L=212.45 R=477.00 Δ=25°31'09"

N38°15'44"W 54.00

13.17 S61°31'42"W

L=143.86 R=323.00 Δ=25°31'09"

N61°31'42"E 87.04

87.04 S61°31'42"W

N04°16'26"E 29.04

L=14°23'15" R=377.00 L=94.68

82.70 S47°08'27"W

L=81.11 R=323.00 Δ=14°23'15"

N47°08'27"E 64.51

N86°28'06"W 37.82

N56°59'09"W 76.82

N47°13'40"W 22.71

N22°51'51"W 46.41

N10°21'12"E 53.76

N53°36'55"E 56.48

N42°51'33"W 18.34

N42°13'13"W 21.40

S00°11'03"E 293.25

85.83 N47°09'28"E

182.59 N83°57'39"E

N89°38'44"E 31.92

N61°27'44"E 43.87

northeasterly line of Outlot A, CLOVER PRESERVE SECOND ADDITION

E. line of the N 1/2 of the NE 1/4 of Sec. 36

W. line of Outlot A, CLOVER PRESERVE SECOND ADDITION

505.73

INSET A
(SEE SHEET 3 OF 4 SHEETS)

DETAIL A

S28°28'18"E 15.00

S28°28'18"E 14.26

115

100

337.89

175.16 N28°44'35"W

238.27 N20°06'05"W

146.27 N34°33'19"W

42.45 S61°19'14"E

S00°04'45"W 29.15

S00°04'45"W 30.00

N89°25'26"E 140.01

30.00 S00°04'45"W

S. line of the N 1/2 of the NE 1/4 of Sec. 36

N. line of the SE 1/4 of the NE 1/4 of Sec. 36

S00°04'45"W 218.46

N02°58'26"E 54.00

18.79 N12°12'14"W

Δ=12°16'58" R=223.00 L=47.81

S00°04'45"W 191.54

Δ=89°20'41" R=23.00 L=35.87

N00°34'34"W 54.00

Δ=2°44'39" R=77.00 L=3.69

N00°34'34"W 135.09

S89°25'26"W 670.04

30

570.04

N00°04'45"E 1337.82

767.79

S57°24'47"E 59.24

S89°21'39"W 264.30

Drainage & Utility Easement

W. line of the SE 1/4 of the NE 1/4 of Sec. 36

N11°24'24"W 346.15

N00°07'35"W 631.36

E. line of the SE 1/4 of the NE 1/4 of Sec. 36

317.79 N89°10'49"E

Drainage & Utility Easement over all of Outlot I

SE Cor of the NE 1/4 of Sec. 36, Twp. 116, Rge. 24 Fd. Carver County Cast Iron Monument

250.02

325.00

S. line of the SE 1/4 of the NE 1/4 of Sec. 36

1007.11

N89°10'49"E 1332.11

Drainage & Utility Easement

Drainage & Utility Easement

INSET B
(SEE SHEET 4 OF 4 SHEETS)

NORTHEAST QUARTER OF THE SOUTHEAST QUARTER

SOUTHEAST QUARTER

N00°11'03"W 2194.54

1438.79

54

W line of the N 1/2 of the NE 1/4 of Sec. 36

SW Cor of the N 1/2 of the NE 1/4 of Sec. 36

N89°25'26"E 236.00

N89°25'26"E 26.92

S89°25'26"W 849.25

(S61°05'W 1357.0 Deed)

S61°22'40"W 1354.21

N61°31'42"E 610.07

966.76

100

northerly R/W line of the Chicago, Milwaukee, St. Paul & Pacific Railroad

southerly R/W line of the Chicago, Milwaukee, St. Paul & Pacific Railroad

CSAH NO. 10 (HUNDERTMARK ROAD)

TOWNSHIP

SECTION 36

SECTION 31

VICINITY MAP

(NOT TO SCALE)

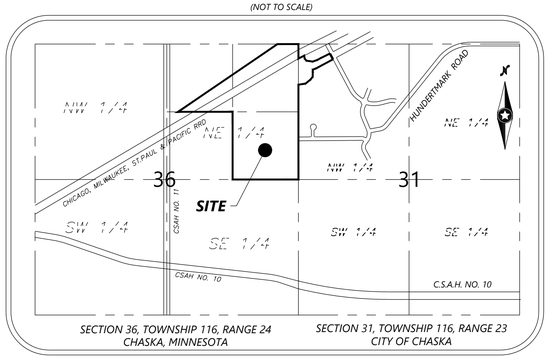

SECTION 36, TOWNSHIP 116, RANGE 24 CHASKA, MINNESOTA

SECTION 31, TOWNSHIP 116, RANGE 23 CITY OF CHASKA

○ SET 1/2" BY 14" IRON PIPE WITH CAP #53596

● FOUND MONUMENT AS NOTED ON PLAT

BEARINGS SHOWN ARE BASED UPON THE NORTH LINE OF THE NORTH HALF OF THE NORTHEAST QUARTER OF SECTION 36, TOWNSHIP 116, RANGE 24 IS ASSUMED TO BEAR S 89°40'11" W (CARVER COUNTY 1983NAD (1986ADJ)

SCALE IN FEET

0 150 300 450

SCALE: 1 INCH = 150 FEET

DETAIL A
(NOT TO SCALE)

N61°31'42"E 500.00

S61°22'40"W 1354.21 (S61°05'W 1357.0 DEED)

0.71

NORTHERLY R/W OF THE CHICAGO, MILWAUKEE, ST. PAUL & PACIFIC RAILWAY

NORTHERLY R/W OF THE OLD HASTINGS & DAKOTA RAILWAY CO.

EXCEPTION

OUTLOT M

S28°28'18"E 14.26

S28°28'18"E 15.00

610.07 N61°31'42"E

CHICAGO, MILWAUKEE, ST. PAUL & PACIFIC RAILWAY

DETAIL B
(NOT TO SCALE)

S61°22'40"W 1354.21 (S61°05'W 1357.0 DEED)

500.00

N61°31'42"E

0.57

OUTLOT N

NORTHERLY R/W OF THE CHICAGO, MILWAUKEE, ST. PAUL & PACIFIC RAILWAY

NORTHERLY R/W OF THE OLD HASTINGS & DAKOTA RAILWAY CO.

S28°28'18"E 15.00

EXCEPTION

N61°31'42"E 1602.73

CHICAGO, MILWAUKEE, ST. PAUL & PACIFIC RAILWAY

Westwood
Professional Services, Inc.

OAK CREEK

PLAT FILE NO.
C.R. DOC. NO.

INSET A
(FROM SHEET 2 OF 4 SHEETS)

OUTLOT A
Drainage & Utility Easement over all of Outlot A

OUTLOT B
Drainage & Utility Easement over all of Outlot B

OAK CREEK DRIVE

OAK CREEK COURT

Edge of Wetland

Drainage & Utility Easement

N61°31'42"E 1341.76

N04°16'32"E 29.04

S42°51'33"E 18.54

N42°51'33"W 27.40

N86°28'06"W 37.82

N56°59'09"W 76.82

N47°13'40"W 22.71

N22°51'51"W 46.41

N10°21'12"E 53.76

N53°36'55"E 56.48

N47°09'28"E 85.83

N89°38'44"E 31.92

N61°27'44"E 43.87

N83°57'39"E 182.59

N00°11'03"W 505.73

N89°48'57"E 109.08

N75°45'59"W 114.99

N64°41'56"E 70.31

N00°29'23"E 136.26

N59°30'37"W 130.00

N26°50'18"E 86.98

N14°48'01"E 88.27

N02°20'57"E 88.27

N47°08'27"E 65.74

N59°16'34"E 89.54

N69°56'36"E 80.83

N73°25'21"E 65.51

N69°46'25"E 61.18

N64°16'36"E 61.18

S28°28'18"E 135.00

N25°28'24"W 135.00

N17°28'41"W 135.00

N37°55'29"W 135.50

N37°55'29"W 136.53

N73°31'35"E 70.55

N61°31'42"E 189.53

S75°18'52"W 125.00

N75°18'52"E 135.00

S75°18'52"W 127.33

S75°18'52"W 125.00

S86°07'25"W 130.00

N81°25'31"W 130.00

N68°58'26"W 130.00

N59°30'37"W 130.00

S59°30'37"E 132.29

S59°30'37"E 130.00

N76°44'47"E 130.00

S64°05'13"E 198.43

N70°43'48"E 132.49

N70°43'48"E 131.39

N70°43'48"E 130.44

N64°33'10"E 142.27

S63°50'50"E 108.23

S26°09'10"W

S70°43'48"W 33.00

N20°44'35"W 175.18

N20°08'09"W 228.27

S20°35'47"W 280.67

S21°44'43"E 151.55

N61°31'42"E 175.67

N61°31'42"E 151.59

N27°42'49"W 229.74

N14°41'08"W 74.74

S50°26'41"W 153.08

S50°26'41"W 247.25

S50°26'41"W 183.70

N30°29'23"E 157.97

N30°29'23"E 208.43

S07°26'12"E

N12°38'57"W 131.08

N13°11'17"W

Δ=11°59'53" L=173.18

Δ=26°23'08" L=102.69

Δ=26°23'08" R=259.00 L=119.13

Δ=32°54'18" L=107.38

Δ=25°50'56" L=84.36

Δ=17°27'37" L=56.99

Δ=1°00'01" L=13.49

Δ=8°59'59" L=43.51

Δ=12°27'04" L=60.20

Δ=4°56'05" L=23.86

Δ=5°29'48" L=74.16

Δ=5°29'48" L=74.16

Δ=17°14'10" L=67.08

Δ=9°27'49" L=45.75

Δ=42°20'30" L=44.34

Δ=42°20'30" L=44.34

Δ=42°20'30"

Δ=47°41'40" L=49.95

Δ=234°00'29" L=245.05 R=60.00

Δ=41°09'21" L=43.10

Δ=4°01'38" L=4.22

Δ=51°49'30" R=100.00 L=90.45

Δ=14°29'13" L=24.89

Δ=3°21'22" L=38.52

Δ=32°16'23" L=77.73

Δ=16°10'38" L=54.27

Δ=28°24'00" R=192.00 L=95.17

Δ=45°10'31" R=250.00 L=197.11

Δ=2°27'58" R=827.00 L=35.60

Δ=15°12'55" L=35.32

Δ=44°54'08" R=160.00 L=126.37

L=167.52 R=600.00 Δ=11°59'53"

L=212.83 R=160.00 Δ=76°12'30"

L=241.60 Δ=68°59'55"

L=55.11 Δ=26°56'50"

Δ=25°45'19" L=51.93

Δ=51°49'30" R=100.00 L=90.45

R=44.00

R=2050.00

R=827.00

R=160.00

R=192.00

R=250.00

R=600.00

R=160.00

R=100.00

R=44.00

R=827.00

R=2050.00

R=600

OAK CREEK

PLAT FILE NO.
C.R. DOC. NO.

INSET B

(FROM SHEET 2 OF 4 SHEETS)

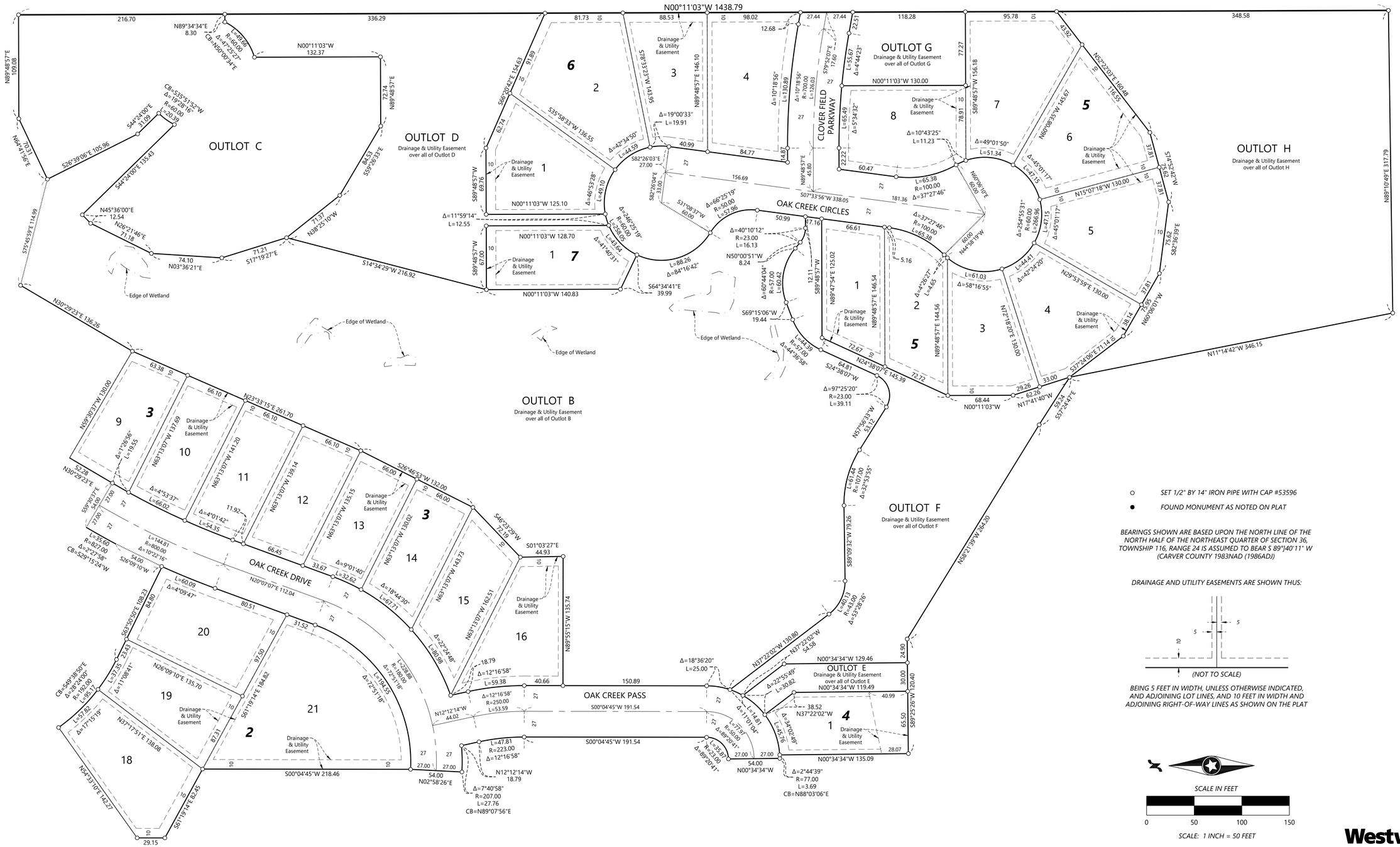

○ *SET 1/2" BY 14" IRON PIPE WITH CAP #53596*

● *FOUND MONUMENT AS NOTED ON PLAT*

BEARINGS SHOWN ARE BASED UPON THE NORTH LINE OF THE NORTH HALF OF THE NORTHEAST QUARTER OF SECTION 36, TOWNSHIP 116, RANGE 24 IS ASSUMED TO BEAR S 89°14'40"11" W (CARVER COUNTY 1983NAD (1986ADJ)

DRAINAGE AND UTILITY EASEMENTS ARE SHOWN THUS:

BEING 5 FEET IN WIDTH, UNLESS OTHERWISE INDICATED, AND ADJOINING LOT LINES, AND 10 FEET IN WIDTH AND ADJOINING RIGHT-OF-WAY LINES AS SHOWN ON THE PLAT

SCALE IN FEET

0 50 100 150

SCALE: 1 INCH = 50 FEET

Westwood
Professional Services, Inc.

© 2022 Westwood Professional Services, Inc.

CONSTRUCTION PLANS

FOR

SANITARY SEWER, WATERMAIN, STORM SEWER AND STREETS

FOR

OAK CREEK PHASE 1

CHASKA, MN

PREPARED FOR:

DR HORTON, INC. - MINNESOTA

20860 KENBRIDGE COURT, SUITE 100

LAKEVILLE, MINNESOTA 55044

CONTACT: RICK THOMSON

PHONE: 952-985-7430

EMAIL: RLTHOMSON@DRHORTON.COM

PREPARED BY:

Westwood

Phone (952) 937-5150 12701 Whitewater Drive, Suite #300
Fax (952) 937-5822 Minnetonka, MN 55343
Toll Free (888) 937-5150 westwoodps.com

Westwood Professional Services, Inc.

PROJECT NUMBER: 0024429.00

CONTACT: FRANCIS D. HAGEN



Vicinity Map
(NOT TO SCALE)

SHEET INDEX

Sheet List Table	
Sheet Number	Sheet Title
1	Cover
2	Overall - North
3	Overall - South
4	Sanitary Sewer and Watermain Construction Plan
5	Sanitary Sewer and Watermain Construction Plan
6	Sanitary Sewer and Watermain Construction Plan
7	Sanitary Sewer and Watermain Construction Plan
8	Sanitary Sewer and Watermain Construction Plan
9	Sanitary Sewer and Watermain Construction Plan
10	Storm Sewer and Street Construction
11	Storm Sewer and Street Construction
12	Storm Sewer and Street Construction
13	Storm Sewer and Street Construction
14	Storm Sewer and Street Construction
15	Backyard Storm Sewer
16	Backyard Storm Sewer
17	Intersection Details
18	Typical Street Sections
19	Details
20	Details
21	Details
22	Details
23	Details
24	Details
25	Details
26	Details
27	Details
28	Lift Station Details

BENCHMARKS

MnDOT CONTROL POINT "GUERN"
POINT #7002
EL = 970.38

MnDOT CONTROL POINT "VICTORY"
POINT #7003
EL = 995.14

HORIZONTAL DATUM
1983NAD (1986 ADJ) CARVER COUNTY COORDINATE SYSTEM; US SURVEY FOOT

VERTICAL DATUM
1988NAVD US SURVEY FOOT

NO.	DATE	REVISION	SHEETS
1	05/24/2022	CITY COMMENTS	ALL
	.	.	
	.	.	
	.	.	
	.	.	
	.	.	
	.	.	
	.	.	
	.	.	
	.	.	

CONSTRUCTION PLANS
FOR
SANITARY SEWER, WATERMAIN, STORM SEWER AND STREETS
FOR
OAK CREEK PHASE 1
CHASKA, MN

INITIAL SUBMITTAL DATE: 04/29/2022 SHEET: 1 OF 28

I:\0024429.00\DWG\CIVIL\FINAL\STREET - UTILITY CONSTRUCTION\0024429C-CVF01.DWG

© 2022 Westwood Professional Services, Inc.

STORM SEWER CASTING SCHEDULE			
Structure			Casting Type
Number	Type	Dia.	
32	FES	42"	w/TRASHGUARD
54	FES	15"	w/TRASHGUARD
87	STUB	15"	-
90	FES	42"	w/TRASHGUARD
94	OCS	60"	SEE DETAIL
97	FES	12"	w/TRASHGUARD
100	FES	21"	w/TRASHGUARD
101	CBMH	72"	R-3067-VB
102	CBMH	48"	R-3067-VB
103	CBMH	48"	R-4342
103A	CBMH	48"	R-4342
103B	CBMH	48"	R-4342
104	CB	27"	R-4342
105	CBMH	48"	R-3067-V
106	CB	2'x 3'	R-3067-V
107	CBMH	48"	R-3067-V
108	CBMH	48"	R-3067-V
109	CBMH	48"	R-3067-V
110	CB	2'x 3'	R-3067-V
111	STMH	48"	R-1642B
112	CBMH	48"	R-3067-V
113	CB	2'x 3'	R-3067-V
114	STMH	48"	R-1642B
115	STMH	48"	R-1642B
116	CBMH	48"	R-3067-VB
117	CBMH	48"	R-3067-VB
118	CB	2'x 3'	R-3067-V
119	CBMH	48"	R-3067-V
120	CB	2'x 3'	R-3067-V
121	FES	15"	w/TRASHGUARD
121A	STMH	48"	R-1642B
122	CBMH	48"	R-3067-V
200	FES	18"	w/TRASHGUARD
201	STMH	48"	R-1642B
202	STMH	48"	R-1642B
205	FES	24"	w/TRASHGUARD
208	CBMH	48"	R-3067-VB
209	CB	2'x 3'	R-3067-VB
210	CBMH	48"	R-3067-VB
224	CBMH	48"	R-3067-V
225	CB	27"	R-4342
226	CBMH	48"	R-3067-VB
227	CBMH	48"	R-3067-VB
228	CBMH	48"	R-4342
229	CB	27"	R-4342
231	CB	2'x 3'	R-3067-VB
245	FES	42"	w/TRASHGUARD
246	FES	42"	w/TRASHGUARD
247	FES	42"	w/TRASHGUARD
248	FES	42"	w/TRASHGUARD
250	STUB	21"	-
251	OCS	60"	SEE DETAIL
252	FES	15"	w/TRASHGUARD
269	OCS	60"	SEE DETAIL
270	FES	18"	w/TRASHGUARD
400	FES	12"	w/TRASHGUARD
401	CBMH	48"	R-3067-VB
402	CBMH	48"	R-3067-VB
403	CBMH	48"	R-3067-V
404	CBMH	48"	R-3067-V
405	CB	2'x 3'	R-3067-VB
406	CB	48"	R-3067-VB
411	FES	15"	w/TRASHGUARD
412	OCS	60"	SEE DETAIL
501	FES	54"	w/TRASHGUARD
502	STMH	96"	R-1642B
503	STMH	96"	R-1642B
700	FES	15"	w/TRASHGUARD
702	STUB	15"	-

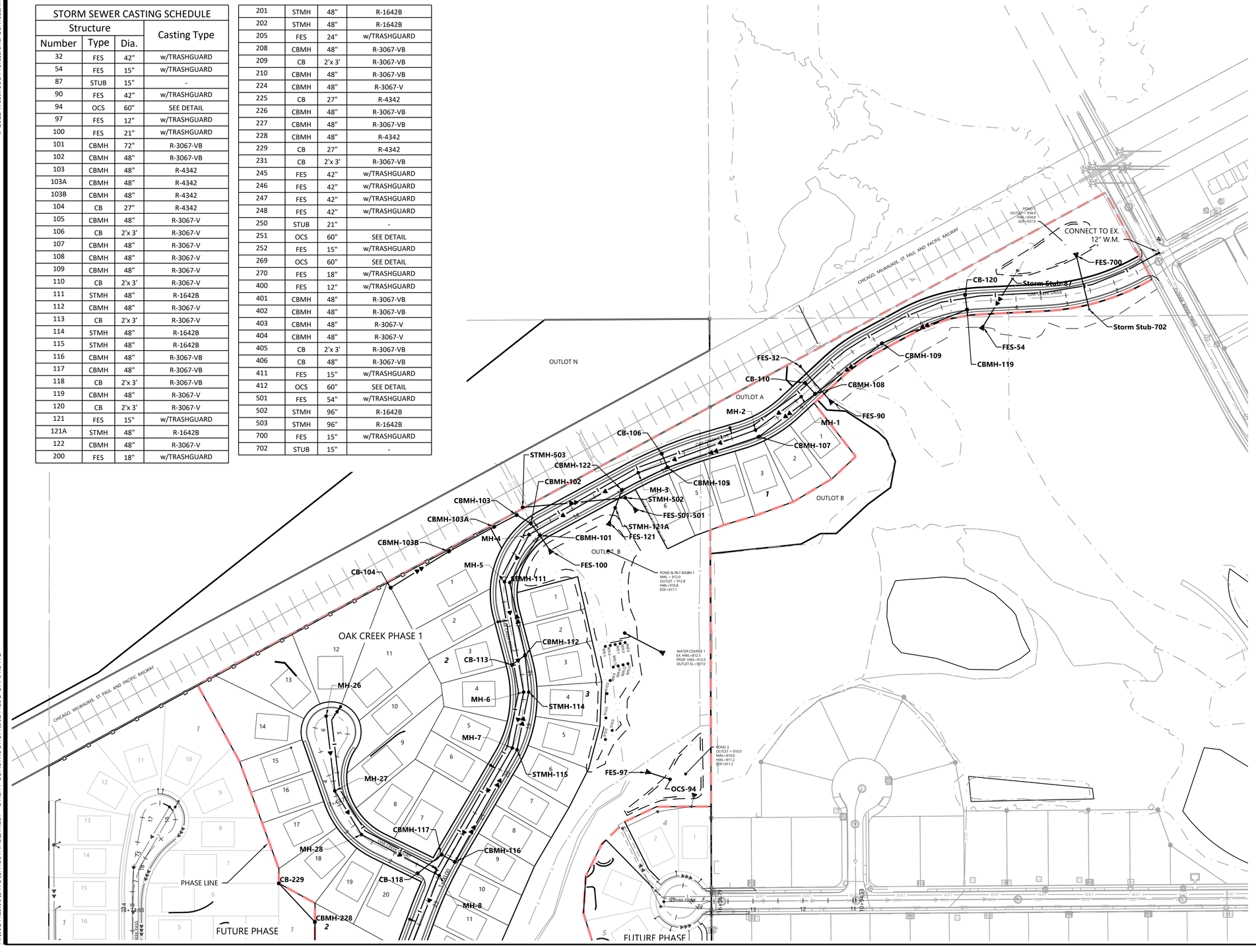

Call 48 Hours before digging:

811 or call811.com

Common Ground Alliance

UTILITY LEGEND

EXISTING	PROPOSED	
SAN		SANITARY SEWER
STO		STORM SEWER
DT		DRAIN TILE
WAT		WATER MAIN
WAT		HYDRANT

GENERAL UTILITY NOTES

1. THE CONTRACTOR SHALL VERIFY ALL EXISTING CONDITIONS PRIOR TO CONSTRUCTION AND NOTIFY THE OWNER OF ANY DIFFERENCES.
2. UNLESS OTHERWISE NOTED, ALL MATERIALS, CONST. TECHNIQUES AND TESTING SHALL CONFORM TO THE 2013 ED. OF THE "STANDARD UTILITIES SPECIFICATIONS FOR WATER MAIN AND SERVICE LINE INSTALLATION AND SANITARY SEWER AND STORM SEWER INSTALLATION BY THE CITY ENGINEERING ASSOCIATION OF MINN." AND TO THE "STANDARD SPECIFICATION FOR HIGHWAY CONSTRUCTION" MINN. DEPT. OF TRANS., AUGUST 31, 2016 INCLUDING THE CURRENT ADDENDUM. THE CONTRACTOR SHALL BE REQUIRED TO FOLLOW ALL PROCEDURES AS OUTLINED BY THE LOCAL AGENCY.
3. THE CONTRACTOR SHALL RECEIVE THE NECESSARY PERMITS FOR ALL WORK OUTSIDE OF THE PROPERTY LIMITS.
4. VERIFY EXISTING INVERT LOCATION & ELEVATION PRIOR TO BEGINNING CONSTRUCTION.
5. THE CONTRACTOR SHALL CONTACT "GOPHER STATE ONE CALL" FOR FOR UTILITY LOCATIONS PRIOR TO UTILITY INSTALLATION.
6. WATER SERVICE SHALL BE INSTALLED WITH A MIN OF 7.5' OF COVER. THE CONTRACTOR SHALL VERIFY AS-BUILT CONSTRUCTION PLANS TO CHECK LOCATION AND MATERIAL TYPE.
7. ALL STORM SEWER PIPE SHALL BE CLASS 5 UNLESS OTHERWISE NOTED.
8. SEWER AND WATER SERVICES SHALL BE PLACED TO AVOID DRIVEWAYS.

1" = ####

0' #### #### ####

FINAL CONSTRUCTION

N:\0024429.00\DWG\CIVIL\FINALS\TREET - UTILITY CONSTRUCTION\0024429C-OAF01.DWG

OAK CREEK

DESIGNED: FDH II
CHECKED: FDH II
DRAWN: KFP/DJW
HORIZONTAL SCALE: ##########
VERTICAL SCALE: ### OR ###

INITIAL ISSUE: 04/29/2022
REVISIONS:
1 05/24/22 CITY COMMENTS
2 . .
3 . .
4 . .
5 . .

PREPARED FOR:

DR HORTON, INC. - MINNESOTA

20860 KENBRIDGE COURT, SUITE 100
LAKEVILLE, MINNESOTA 55044

I HEREBY CERTIFY THAT THIS PLAN WAS PREPARED BY ME OR UNDER MY DIRECT SUPERVISION AND THAT I AM A DULY LICENSED PROFESSIONAL ENGINEER UNDER THE LAWS OF THE STATE OF MINNESOTA

FRANCIS D. HAGEN

DATE: 05/24/22 LICENSE NO. 17716

OAK CREEK

CHASKA, MN

Westwood

Phone (952) 937-5150 12701 Whitewater Drive, Suite #300
Fax (952) 937-5822 Minnetonka, MN 55343
Toll Free (888) 937-5150 westwoodps.com

Westwood Professional Services, Inc.

OVERALL - NORTH

PROJECT NUMBER: 0024429.00

SHEET NUMBER: 2 OF 28

DATE: 05/24/22

© 2022 Westwood Professional Services, Inc.

Call 48 Hours before digging:
811 or call811.com
Common Ground Alliance

UTILITY LEGEND

EXISTING	PROPOSED	
SAN		SANITARY SEWER
STO		STORM SEWER
DT		DRAIN TILE
WAT		WATER MAIN
WAT		HYDRANT

GENERAL UTILITY NOTES

1. THE CONTRACTOR SHALL VERIFY ALL EXISTING CONDITIONS PRIOR TO CONSTRUCTION AND NOTIFY THE OWNER OF ANY DIFFERENCES.
2. UNLESS OTHERWISE NOTED, ALL MATERIALS, CONST. TECHNIQUES AND TESTING SHALL CONFORM TO THE 2013 ED. OF THE "STANDARD UTILITIES SPECIFICATIONS FOR WATER MAIN AND SERVICE LINE INSTALLATION AND SANITARY SEWER AND STORM SEWER INSTALLATION BY THE CITY ENGINEERING ASSOCIATION OF MINN." AND TO THE "STANDARD SPECIFICATION FOR HIGHWAY CONSTRUCTION" MINN. DEPT. OF TRANS., AUGUST 31, 2016 INCLUDING THE CURRENT ADDENDUM. THE CONTRACTOR SHALL BE REQUIRED TO FOLLOW ALL PROCEDURES AS OUTLINED BY THE LOCAL AGENCY.
3. THE CONTRACTOR SHALL RECEIVE THE NECESSARY PERMITS FOR ALL WORK OUTSIDE OF THE PROPERTY LIMITS.
4. VERIFY EXISTING INVERT LOCATION & ELEVATION PRIOR TO BEGINNING CONSTRUCTION.
5. THE CONTRACTOR SHALL CONTACT "GOPHER STATE ONE CALL" FOR FOR UTILITY LOCATIONS PRIOR TO UTILITY INSTALLATION.
6. WATER SERVICE SHALL BE INSTALLED WITH A MIN OF 7.5' OF COVER. THE CONTRACTOR SHALL VERIFY AS-BUILT CONSTRUCTION PLANS TO CHECK LOCATION AND MATERIAL TYPE.
7. ALL STORM SEWER PIPE SHALL BE CLASS 5 UNLESS OTHERWISE NOTED.
8. SEWER AND WATER SERVICES SHALL BE PLACED TO AVOID DRIVEWAYS.

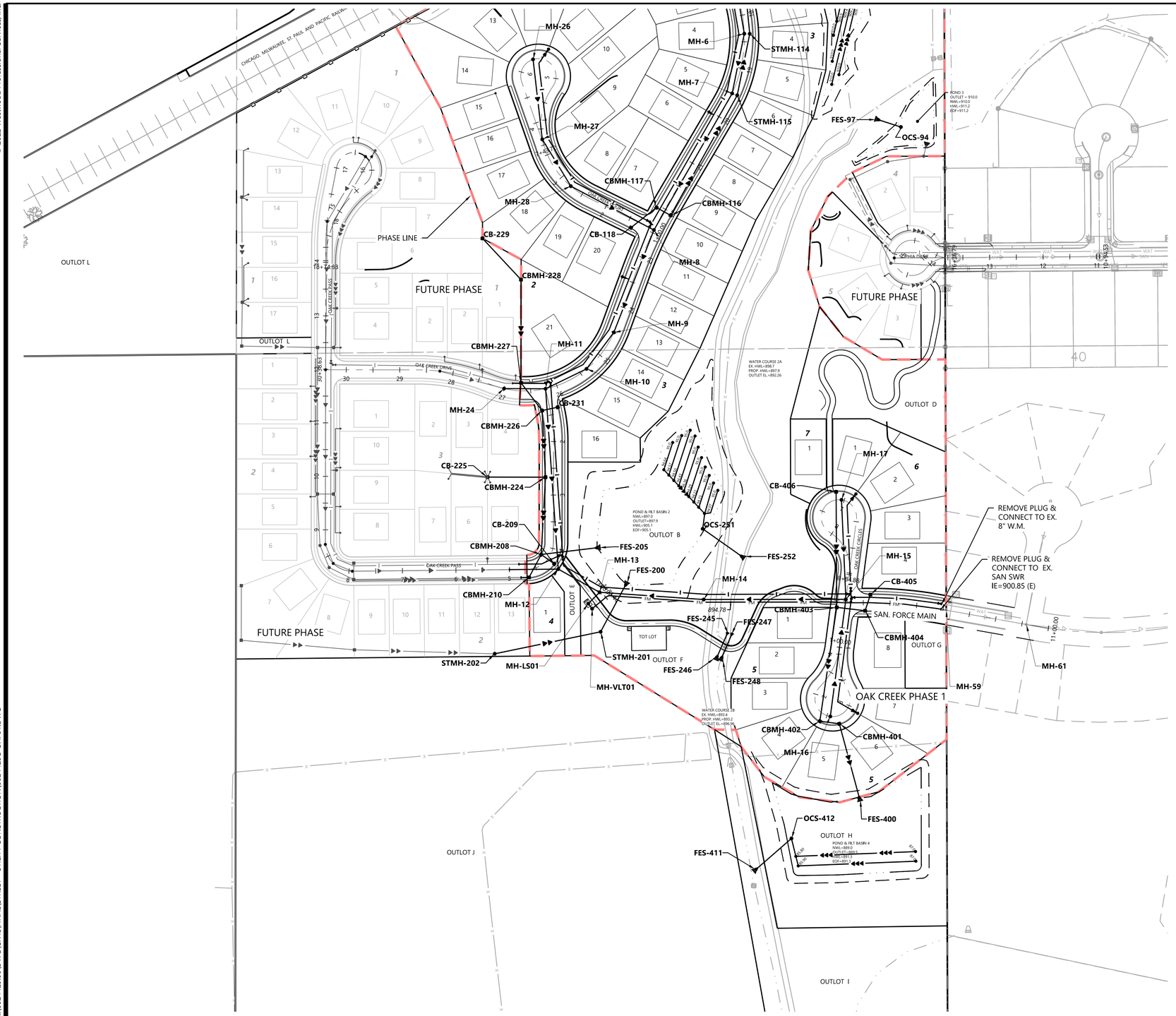

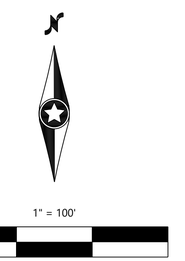

FINAL CONSTRUCTION

N:\0024429.00\DWG\CIVIL\FINAL\STREET - UTILITY CONSTRUCTION\0024429C-OAF01.DWG

OAK CREEK

DESIGNED:	FDH II
CHECKED:	FDH II
DRAWN:	KFP/DJW
HORIZONTAL SCALE:	100'
VERTICAL SCALE:	20' OR 10'

INITIAL ISSUE: 04/29/2022
REVISIONS:
1 05/24/22 CITY COMMENTS
2 . .
3 . .
4 . .

PREPARED FOR:
DR HORTON, INC. - MINNESOTA
20860 KENBRIDGE COURT, SUITE 100
LAKEVILLE, MINNESOTA 55044

I HEREBY CERTIFY THAT THIS PLAN WAS PREPARED BY ME OR UNDER MY DIRECT SUPERVISION AND THAT I AM A DULY LICENSED PROFESSIONAL ENGINEER UNDER THE LAWS OF THE STATE OF MINNESOTA.
FRANCIS D. HAGEN
DATE: 05/24/22 LICENSE NO. 17716

OAK CREEK
CHASKA, MN

Westwood
Phone (952) 937-5150 12701 Whitewater Drive, Suite #300
Fax (952) 937-5822 Minnetonka, MN 55343
Toll Free (888) 937-5150 westwoodps.com
Westwood Professional Services, Inc.

OVERALL - SOUTH

PROJECT NUMBER: 0024429.00

SHEET NUMBER: 3 OF 28
DATE: 05/24/22

© 2022 Westwood Professional Services, Inc.

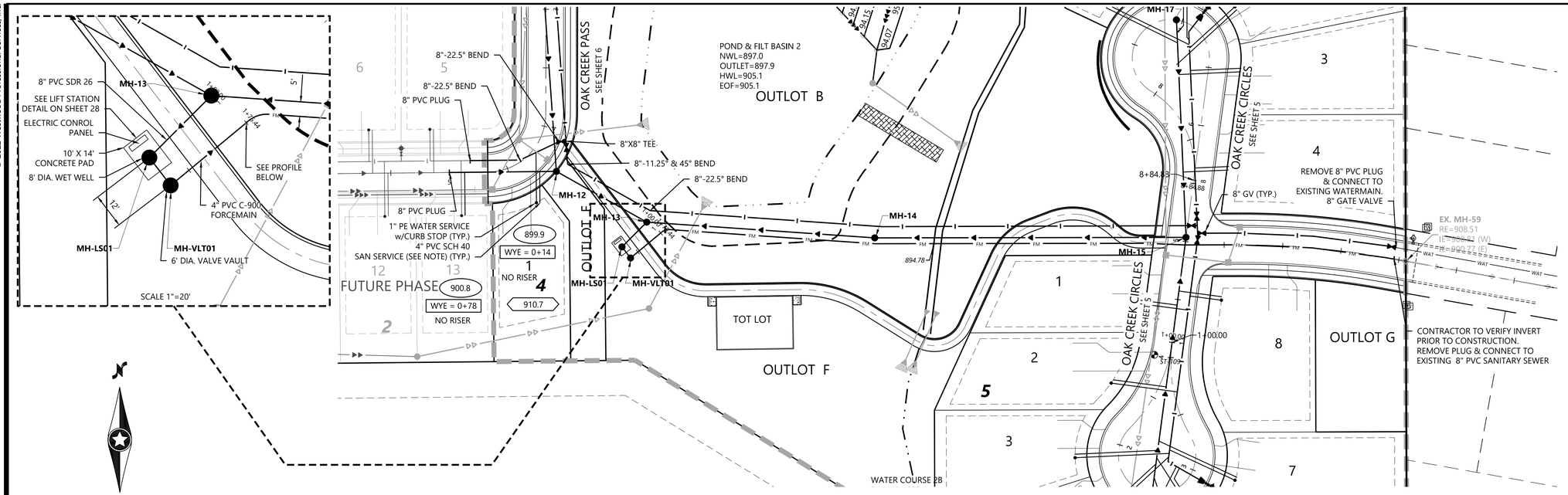

Call 48 Hours before digging:
811 or call811.com
Common Ground Alliance

LEGEND

XXX.X	SANITARY SEWER SERVICE INVERT ELEVATION @ EASEMENT LINE
WYE = X+XX / X.X' RISER	SANITARY SEWER SERVICE WYE LOCATION ON MAIN LINE FROM DOWNSTREAM MANHOLE
XXX.X	DENOTES ELEVATION OF THE TOP OF WATER SERVICE STOP BOX
A	WATER SERVICE TO THIS LOT SHALL BE INSTALLED UNDER PROPOSED STORM SEWER & SHALL MAINTAIN A MINIMUM VERTICAL SEPARATION FROM STORM PIPE OF 1.5 FEET
B	SANITARY SEWER SERVICE TO THIS LOT SHALL BE INSTALLED UNDER PROPOSED STORM SEWER - INSTALL RISER AT PROPERTY LINE
C	WATER SERVICE OVER STORM SEWER (INSULATE)

GENERAL NOTES

FLAG HYDRANTS.

EXTEND RODS ON ALL VALVES PER CITY DETAIL WAT-1

ALL DROP MANHOLES TO BE LINED PER CITY DETAIL SAN-04

SERVICE RISERS FOR SEWER MAINS LESS THAN 22' SHALL BE SCHEDULE 40 PVC (SOLVENT WELD JOINTS).
FOR DEPTHS GREATER THAN 22', SERVICE PIPE SHALL BE C900 FROM MAIN TO CONNECTION WITH TRANSITION FITTING FROM C900 TO SCH 40 INSTALLED AT CONNECTION LOCATION.

1" POLY WATER SERVICE OR APPROVED EQUAL SEE CITY DETAIL SER-2

OUTLOT B CONNECTION

CLOVER PRESERVE LANE

LIFT STATION

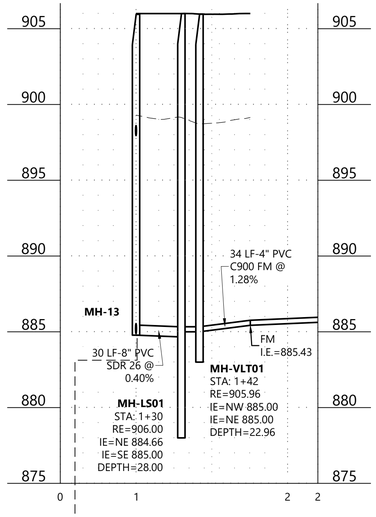

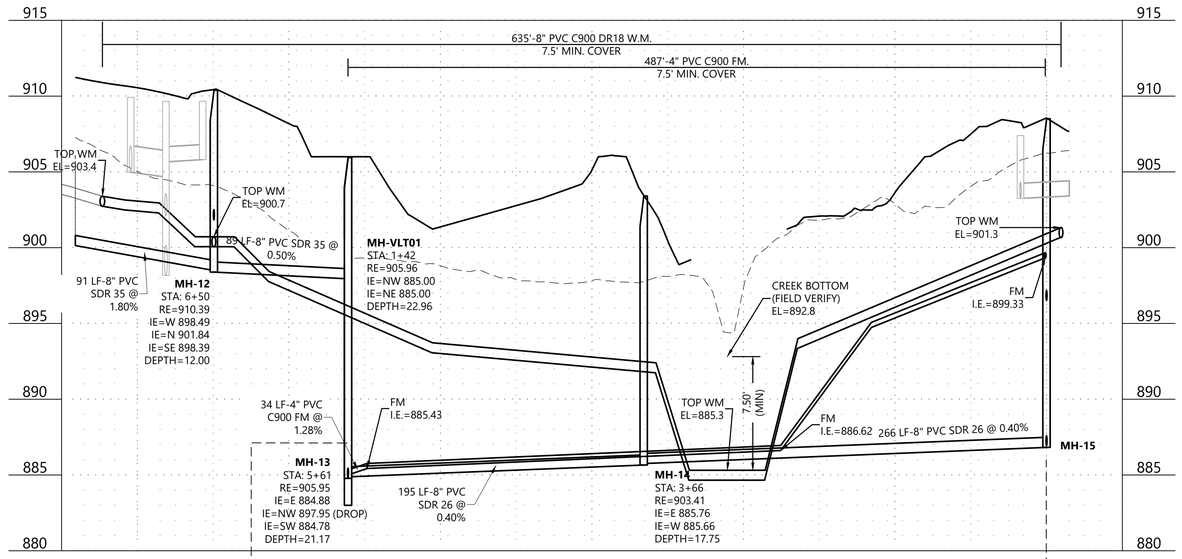

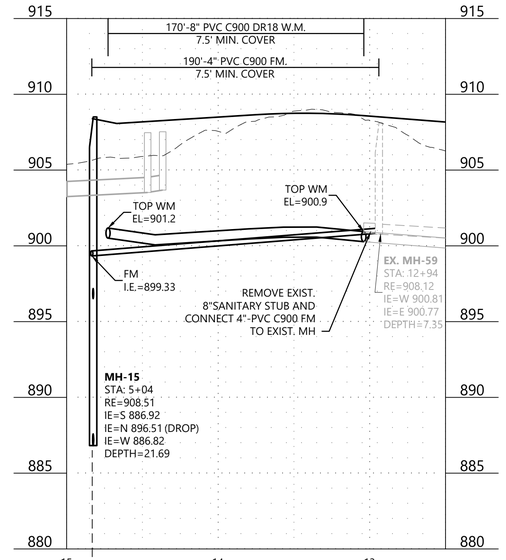

FINAL CONSTRUCTION

DESIGNED:	FDH II
CHECKED:	FDH II
DRAWN:	KFP/DJW
HORIZONTAL SCALE:	50'
VERTICAL SCALE:	5'

INITIAL ISSUE: 04/29/2022
REVISIONS:
1 05/24/22 CITY COMMENTS
2 . .
3 . .
4 . .
5 . .

PREPARED FOR:

DR HORTON, INC. - MINNESOTA
20860 KENBRIDGE COURT, SUITE 100
LAKEVILLE, MINNESOTA 55044

I HEREBY CERTIFY THAT THIS PLAN WAS PREPARED BY ME OR UNDER MY DIRECT SUPERVISION AND THAT I AM A DULY LICENSED PROFESSIONAL ENGINEER UNDER THE LAWS OF THE STATE OF MINNESOTA.
FRANCIS D. HAGEN
DATE: 05/24/22 LICENSE NO. 17716

OAK CREEK
CHASKA, MN

Westwood
Phone (952) 937-5150 12701 Whitewater Drive, Suite #300
Fax (952) 937-5822 Minnetonka, MN 55343
Toll Free (888) 937-5150 westwoodps.com
Westwood Professional Services, Inc.

SANITARY SEWER AND WATERMAIN CONSTRUCTION PLAN
PROJECT NUMBER: 0024429.00

SHEET NUMBER: 4 OF 28
DATE: 05/24/22

N:\0024429.00\DWG\CIVIL\FINAL\STREET - UTILITY CONSTRUCTION\0024429C-UTF01.DWG

OAK CREEK PHASE 1

© 2022 Westwood Professional Services, Inc.

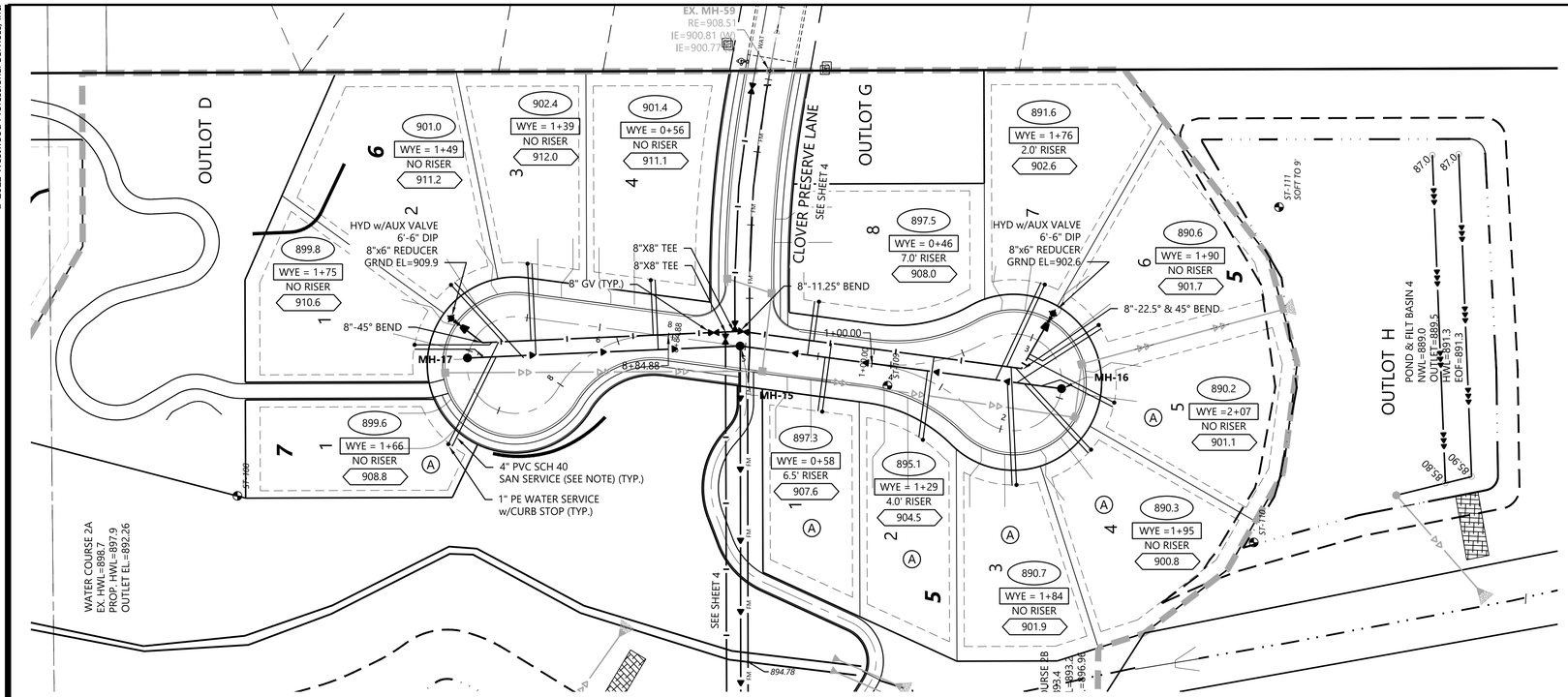

OAK CREEK CIRCLES

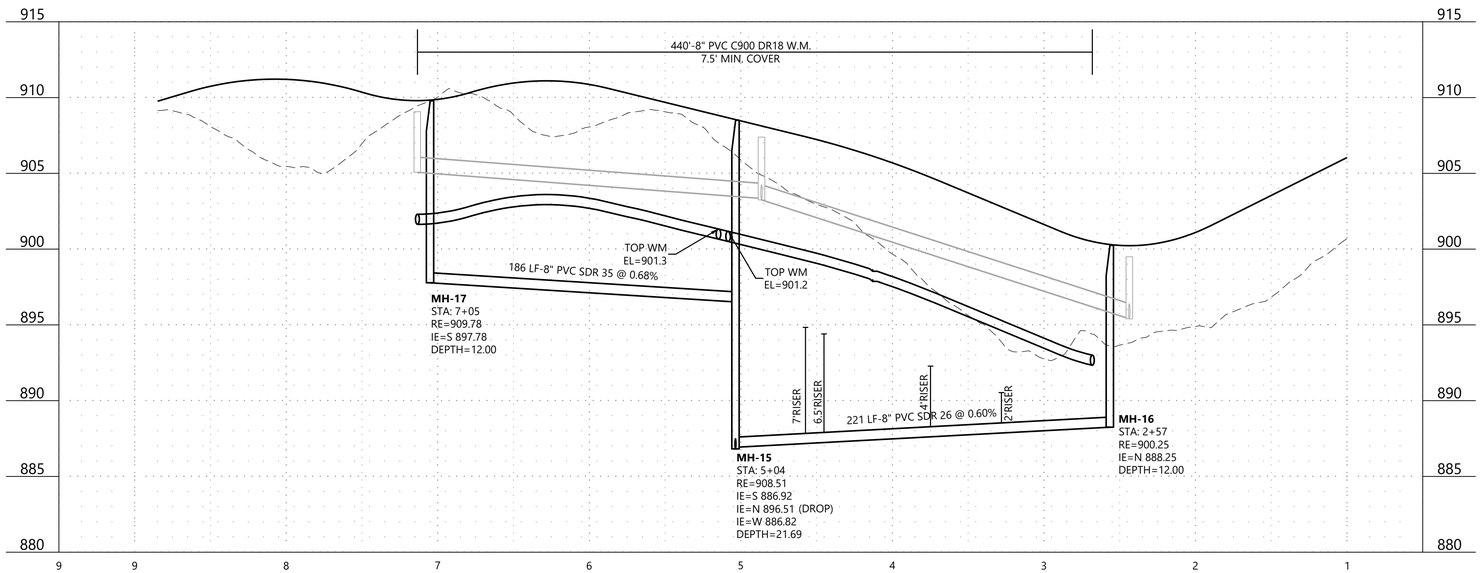

Call 48 Hours before digging:
811 or call811.com
Common Ground Alliance

LEGEND

XXX.X	SANITARY SEWER SERVICE INVERT ELEVATION @ EASEMENT LINE
WYE = X+XX / X.X' RISER / XXX.X	SANITARY SEWER SERVICE WYE LOCATION ON MAIN LINE FROM DOWNSTREAM MANHOLE; DENOTES ELEVATION OF THE TOP OF WATER SERVICE STOP BOX
(A)	WATER SERVICE TO THIS LOT SHALL BE INSTALLED UNDER PROPOSED STORM SEWER & SHALL MAINTAIN A MINIMUM VERTICAL SEPARATION FROM STORM PIPE OF 1.5 FEET
(B)	SANITARY SEWER SERVICE TO THIS LOT SHALL BE INSTALLED UNDER PROPOSED STORM SEWER - INSTALL RISER AT PROPERTY LINE
(C)	WATER SERVICE OVER STORM SEWER (INSULATE)

GENERAL NOTES

FLAG HYDRANTS.

EXTEND RODS ON ALL VALVES PER CITY DETAIL WAT-1

ALL DROP MANHOLES TO BE LINED PER CITY DETAIL SAN-04

SERVICE RISERS FOR SEWER MAINS LESS THAN 22' SHALL BE SCHEDULE 40 PVC (SOLVENT WELD JOINTS).
FOR DEPTHS GREATER THAN 22', SERVICE PIPE SHALL BE C900 FROM MAIN TO CONNECTION WITH TRANSITION FITTING FROM C900 TO SCH 40 INSTALLED AT CONNECTION LOCATION.

1" POLY WATER SERVICE OR APPROVED EQUAL SEE CITY DETAIL SER-2

1" = 50'

0' 50' 100' 150'

FINAL CONSTRUCTION

OAK CREEK PHASE 1

N:\0024429.00\DWG\CIVIL\FINAL\STREET - UTILITY CONSTRUCTION\0024429C-UTF01.DWG

DESIGNED:	FDH II
CHECKED:	FDH II
DRAWN:	KFP/DJW
HORIZONTAL SCALE:	50'
VERTICAL SCALE:	5'

INITIAL ISSUE: 04/29/2022
REVISIONS:
1 05/24/22 CITY COMMENTS
2 . .
3 . .
4 . .
5 . .

PREPARED FOR:

DR HORTON, INC. - MINNESOTA

20860 KENBRIDGE COURT, SUITE 100
LAKEVILLE, MINNESOTA 55044

I HEREBY CERTIFY THAT THIS PLAN WAS PREPARED BY ME OR UNDER MY DIRECT SUPERVISION AND THAT I AM A DULY LICENSED PROFESSIONAL ENGINEER UNDER THE LAWS OF THE STATE OF MINNESOTA

FRANCIS D. HAGEN
DATE: 05/24/22 LICENSE NO. 17716

OAK CREEK

CHASKA, MN

Westwood

Phone (952) 937-5150 12701 Whitewater Drive, Suite #300
Fax (952) 937-5822 Minnetonka, MN 55343
Toll Free (888) 937-5150 westwoodps.com

Westwood Professional Services, Inc.

SANITARY SEWER AND WATERMAIN CONSTRUCTION PLAN

PROJECT NUMBER: 0024429.00

SHEET NUMBER: 5 OF 28

DATE: 05/24/22

© 2022 Westwood Professional Services, Inc.

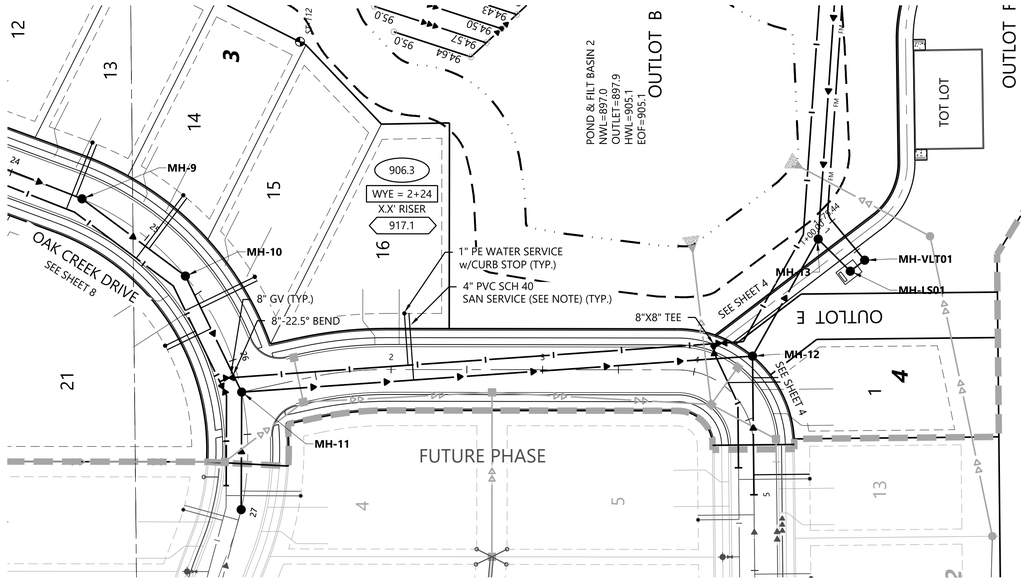

OAK CREEK PASS

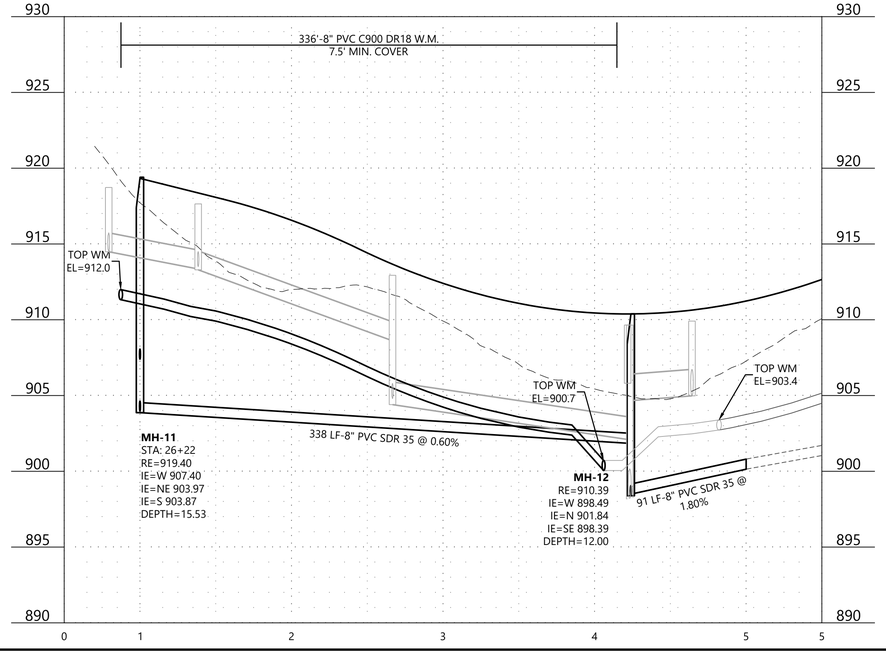

Call 48 Hours before digging:
811 or call811.com
Common Ground Alliance

LEGEND

XXX.X	SANITARY SEWER SERVICE INVERT ELEVATION @ EASEMENT LINE
WYE = X+XX / X.X' RISER	SANITARY SEWER SERVICE WYE LOCATION ON MAIN LINE FROM DOWNSTREAM MANHOLE
XXX.X	DENOTES ELEVATION OF THE TOP OF WATER SERVICE STOP BOX
A	WATER SERVICE TO THIS LOT SHALL BE INSTALLED UNDER PROPOSED STORM SEWER & SHALL MAINTAIN A MINIMUM VERTICAL SEPARATION FROM STORM PIPE OF 1.5 FEET
B	SANITARY SEWER SERVICE TO THIS LOT SHALL BE INSTALLED UNDER PROPOSED STORM SEWER - INSTALL RISER AT PROPERTY LINE
C	WATER SERVICE OVER STORM SEWER (INSULATE)

GENERAL NOTES

FLAG HYDRANTS.

EXTEND RODS ON ALL VALVES PER CITY DETAIL WAT-1

ALL DROP MANHOLES TO BE LINED PER CITY DETAIL SAN-04

SERVICE RISERS FOR SEWER MAINS LESS THAN 22' SHALL BE SCHEDULE 40 PVC (SOLVENT WELD JOINTS).
FOR DEPTHS GREATER THAN 22', SERVICE PIPE SHALL BE C900 FROM MAIN TO CONNECTION WITH TRANSITION FITTING FROM C900 TO SCH 40 INSTALLED AT CONNECTION LOCATION.

1" POLY WATER SERVICE OR APPROVED EQUAL SEE CITY DETAIL SER-2

1" = 50'

0' 50' 100' 150'

FINAL CONSTRUCTION

OAK CREEK PHASE 1

N:\0024429.00\DWG\CIVIL\FINALSTREET - UTILITY CONSTRUCTION\0024429C-UTF01.DWG

DESIGNED:	FDH II
CHECKED:	FDH II
DRAWN:	KFP/DJW
HORIZONTAL SCALE:	50'
VERTICAL SCALE:	5'

INITIAL ISSUE: 04/29/2022
REVISIONS:
1 05/24/22 CITY COMMENTS
2 . .
3 . .
4 . .
5 . .

PREPARED FOR:

DR HORTON, INC. - MINNESOTA
20860 KENBRIDGE COURT, SUITE 100
LAKEVILLE, MINNESOTA 55044

I HEREBY CERTIFY THAT THIS PLAN WAS PREPARED BY ME OR UNDER MY DIRECT SUPERVISION AND THAT I AM A DULY LICENSED PROFESSIONAL ENGINEER UNDER THE LAWS OF THE STATE OF MINNESOTA.
FRANCIS D. HAGEN
DATE: 05/24/22 LICENSE NO. 17716

OAK CREEK
CHASKA, MN

Westwood
Phone (952) 937-5150 12701 Whitewater Drive, Suite #300
Fax (952) 937-5822 Minnetonka, MN 55343
Toll Free (888) 937-5150 westwoodps.com
Westwood Professional Services, Inc.

SANITARY SEWER AND WATERMAIN CONSTRUCTION PLAN
PROJECT NUMBER: 0024429.00

SHEET NUMBER: 6 OF 28
DATE: 05/24/22

© 2022 Westwood Professional Services, Inc.

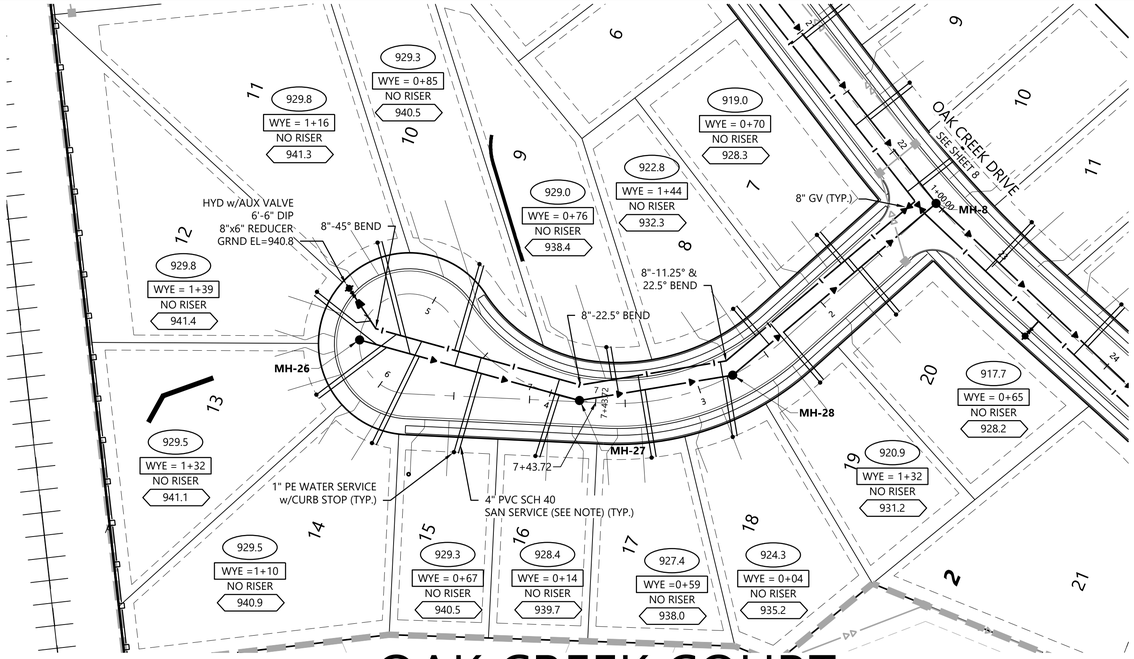

OAK CREEK COURT

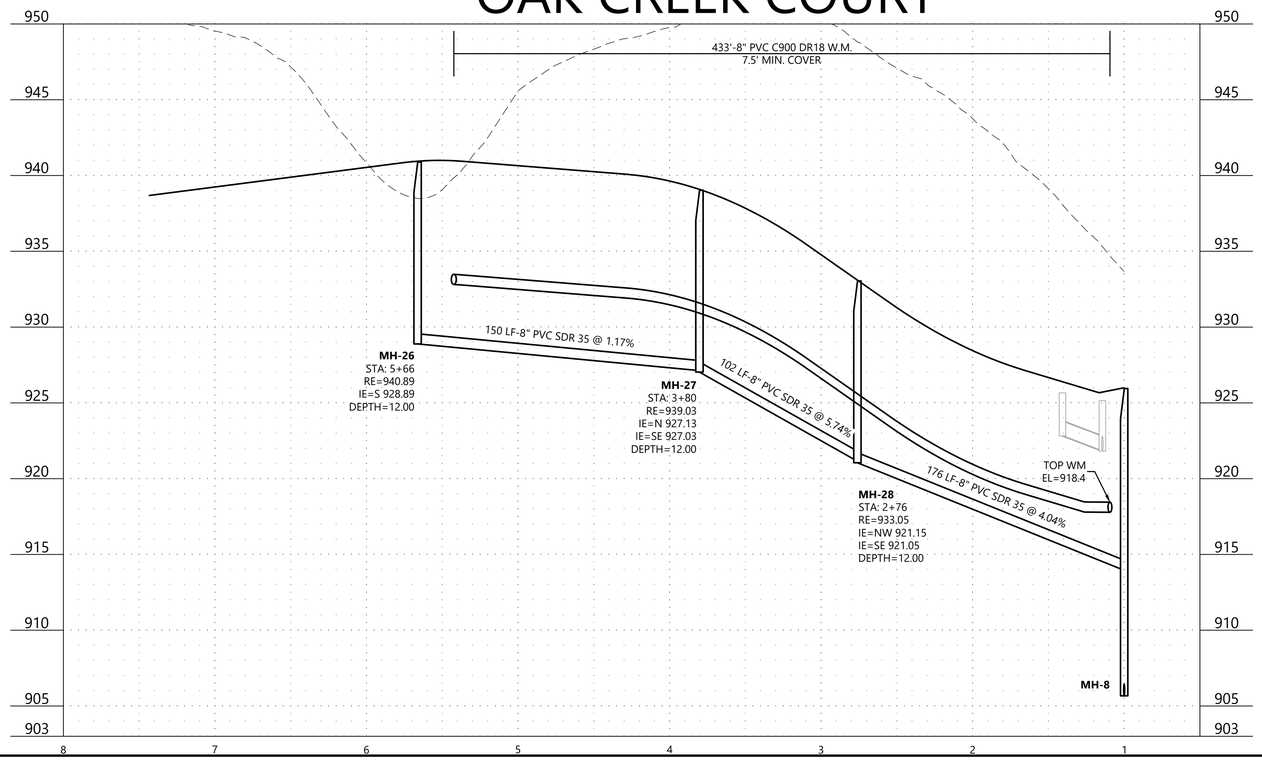

Call 48 Hours before digging:
811 or call811.com
Common Ground Alliance

LEGEND

XXX.X	SANITARY SEWER SERVICE INVERT ELEVATION @ EASEMENT LINE
WYE = X+XX X.X' RISER XXX.X	SANITARY SEWER SERVICE WYE LOCATION ON MAIN LINE FROM DOWNSTREAM MANHOLE DENOTES ELEVATION OF THE TOP OF WATER SERVICE STOP BOX
(A)	WATER SERVICE TO THIS LOT SHALL BE INSTALLED UNDER PROPOSED STORM SEWER & SHALL MAINTAIN A MINIMUM VERTICAL SEPARATION FROM STORM PIPE OF 1.5 FEET
(B)	SANITARY SEWER SERVICE TO THIS LOT SHALL BE INSTALLED UNDER PROPOSED STORM SEWER - INSTALL RISER AT PROPERTY LINE
(C)	WATER SERVICE OVER STORM SEWER (INSULATE)

GENERAL NOTES

FLAG HYDRANTS.

EXTEND RODS ON ALL VALVES PER CITY DETAIL WAT-1

ALL DROP MANHOLES TO BE LINED PER CITY DETAIL SAN-04

SERVICE RISERS FOR SEWER MAINS LESS THAN 22' SHALL BE SCHEDULE 40 PVC (SOLVENT WELD JOINTS).
FOR DEPTHS GREATER THAN 22', SERVICE PIPE SHALL BE C900 FROM MAIN TO CONNECTION WITH TRANSITION FITTING FROM C900 TO SCH 40 INSTALLED AT CONNECTION LOCATION.

1" POLY WATER SERVICE OR APPROVED EQUAL SEE CITY DETAIL SER-2

1" = 50'

0' 50' 100' 150'

FINAL CONSTRUCTION

OAK CREEK PHASE 1

N:\0024429.00\DWG\CIVIL\FINALSTREET - UTILITY CONSTRUCTION\0024429C-UTF01.DWG

DESIGNED: FDH II
CHECKED: FDH II
DRAWN: KFP/DJW
HORIZONTAL SCALE: 50'
VERTICAL SCALE: 5'

INITIAL ISSUE: 04/29/2022
REVISIONS:
1 05/24/22 CITY COMMENTS
2 . .
3 . .
4 . .
5 . .

PREPARED FOR:

DR HORTON, INC. - MINNESOTA

20860 KENBRIDGE COURT, SUITE 100
LAKEVILLE, MINNESOTA 55044

I HEREBY CERTIFY THAT THIS PLAN WAS PREPARED BY ME OR UNDER MY DIRECT SUPERVISION AND THAT I AM A DULY LICENSED PROFESSIONAL ENGINEER UNDER THE LAWS OF THE STATE OF MINNESOTA.

FRANCIS D. HAGEN
DATE: 05/24/22 LICENSE NO. 17716

OAK CREEK
CHASKA, MN

Westwood
Phone (952) 937-5150 12701 Whitewater Drive, Suite #300
Fax (952) 937-5822 Minnetonka, MN 55343
Toll Free (888) 937-5150 westwoodps.com
Westwood Professional Services, Inc.

SANITARY SEWER AND WATERMAIN CONSTRUCTION PLAN

PROJECT NUMBER: 0024429.00

SHEET NUMBER: 7 OF 28

DATE: 05/24/22

© 2022 Westwood Professional Services, Inc.

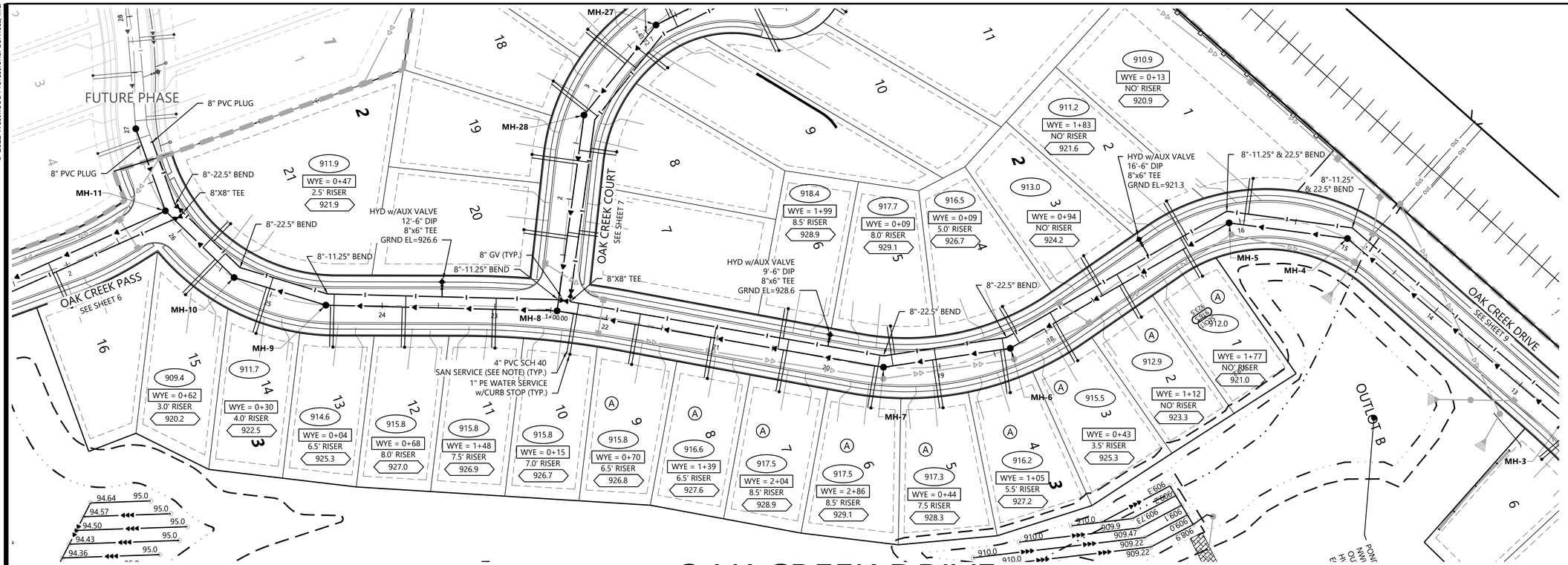

OAK CREEK DRIVE

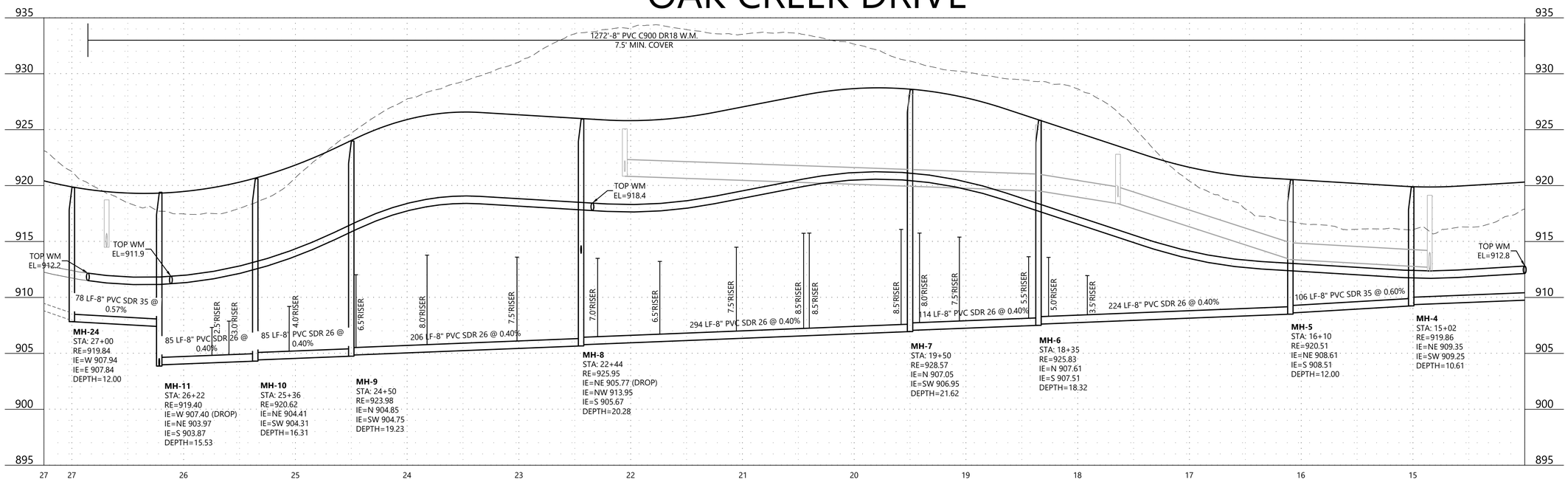

Call 48 Hours before digging:
811 or call811.com
Common Ground Alliance

LEGEND

- XXX.X — SANITARY SEWER SERVICE INVERT ELEVATION @ EASEMENT LINE
- WYE = X+XX / X.X' RISER — SANITARY SEWER SERVICE WYE LOCATION ON MAIN LINE FROM DOWNSTREAM MANHOLE
- XXX.X — DENOTES ELEVATION OF THE TOP OF WATER SERVICE STOP BOX
- (A) — WATER SERVICE TO THIS LOT SHALL BE INSTALLED UNDER PROPOSED STORM SEWER & SHALL MAINTAIN A MINIMUM VERTICAL SEPARATION FROM STORM PIPE OF 1.5 FEET
- (B) — SANITARY SEWER SERVICE TO THIS LOT SHALL BE INSTALLED UNDER PROPOSED STORM SEWER - INSTALL RISER AT PROPERTY LINE
- (C) — WATER SERVICE OVER STORM SEWER (INSULATE)

GENERAL NOTES

FLAG HYDRANTS.

EXTEND RODS ON ALL VALVES PER CITY DETAIL WAT-1

ALL DROP MANHOLES TO BE LINED PER CITY DETAIL SAN-04

SERVICE RISERS FOR SEWER MAINS LESS THAN 22' SHALL BE SCHEDULE 40 PVC (SOLVENT WELD JOINTS).
FOR DEPTHS GREATER THAN 22', SERVICE PIPE SHALL BE C900 FROM MAIN TO CONNECTION WITH TRANSITION FITTING FROM C900 TO SCH 40 INSTALLED AT CONNECTION LOCATION.

1" POLY WATER SERVICE OR APPROVED EQUAL SEE CITY DETAIL SER-2

1" = 50'

0' 50' 100' 150'

FINAL CONSTRUCTION

OAK CREEK PHASE 1

N:\0024429.00\DWG\CIVIL\FINAL\STREET - UTILITY CONSTRUCTION\0024429C-UTF01.DWG

DESIGNED:	FDH II
CHECKED:	FDH II
DRAWN:	KFP/DJW
HORIZONTAL SCALE:	50'
VERTICAL SCALE:	5'

INITIAL ISSUE: 04/29/2022
REVISIONS:
1 05/24/22 CITY COMMENTS
2 . .
3 . .
4 . .
5 . .

PREPARED FOR:

DR HORTON, INC. - MINNESOTA
20860 KENBRIDGE COURT, SUITE 100
LAKEVILLE, MINNESOTA 55044

I HEREBY CERTIFY THAT THIS PLAN WAS PREPARED BY ME OR UNDER MY DIRECT SUPERVISION AND THAT I AM A DULY LICENSED PROFESSIONAL ENGINEER UNDER THE LAWS OF THE STATE OF MINNESOTA

FRANCIS D. HAGEN
DATE: 05/24/22 LICENSE NO. 17716

OAK CREEK
CHASKA, MN

Westwood
Phone (952) 937-5150 12701 Whitewater Drive, Suite #300
Fax (952) 937-5822 Minnetonka, MN 55343
Toll Free (888) 937-5150 westwoodps.com
Westwood Professional Services, Inc.

SANITARY SEWER AND WATERMAIN CONSTRUCTION PLAN
PROJECT NUMBER: 0024429.00

SHEET NUMBER: 8 OF 28
DATE: 05/24/22

© 2022 Westwood Professional Services, Inc.

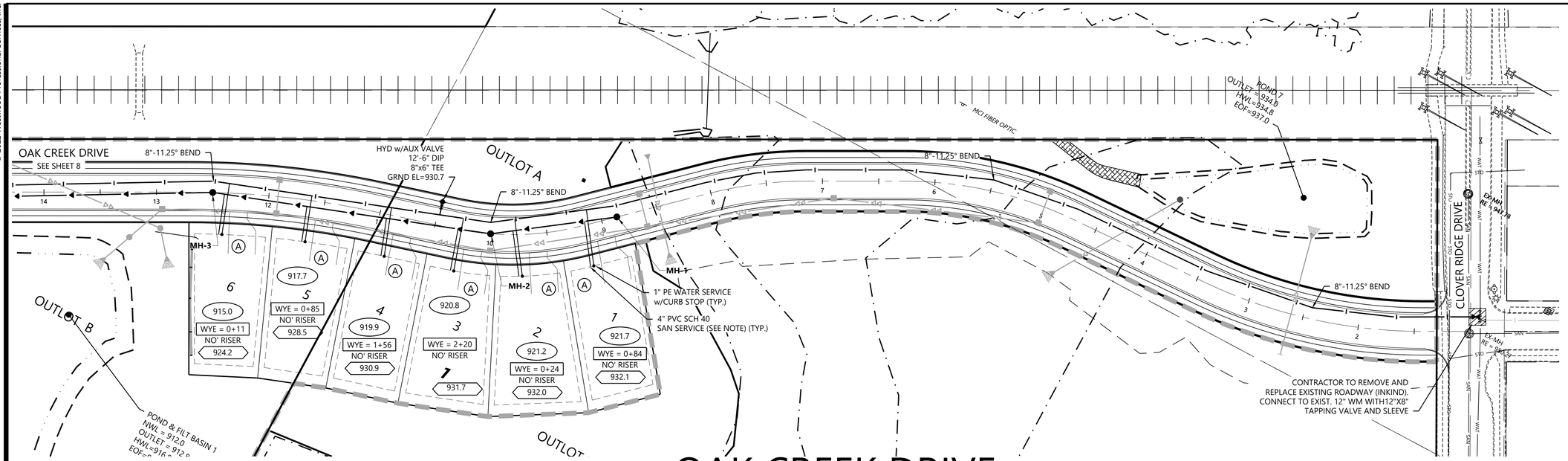

OAK CREEK DRIVE

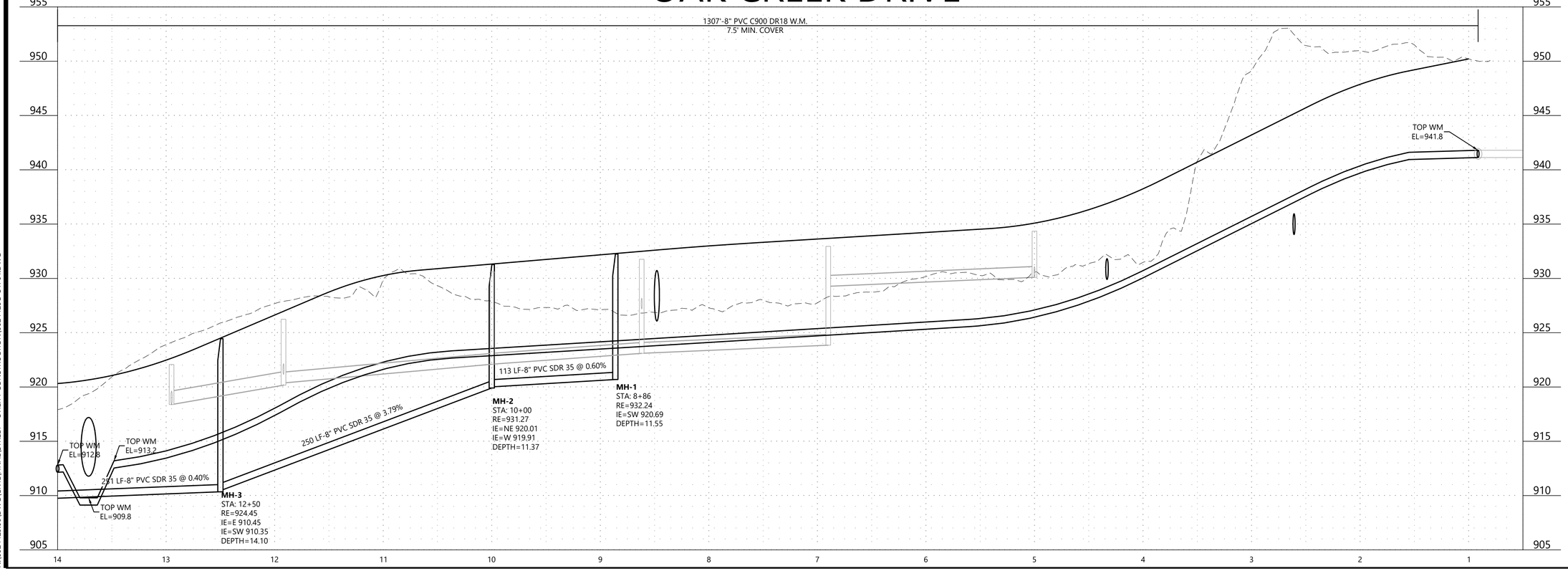

Call 48 Hours before digging:
811 or call811.com
Common Ground Alliance

LEGEND

XXX.X	SANITARY SEWER SERVICE INVERT ELEVATION @ EASEMENT LINE
WYE = X+XX X.X' RISER	SANITARY SEWER SERVICE WYE LOCATION ON MAIN LINE FROM DOWNSTREAM MANHOLE
XXX.X	DENOTES ELEVATION OF THE TOP OF WATER SERVICE STOP BOX
(A)	WATER SERVICE TO THIS LOT SHALL BE INSTALLED UNDER PROPOSED STORM SEWER & SHALL MAINTAIN A MINIMUM VERTICAL SEPARATION FROM STORM PIPE OF 1.5 FEET
(B)	SANITARY SEWER SERVICE TO THIS LOT SHALL BE INSTALLED UNDER PROPOSED STORM SEWER - INSTALL RISER AT PROPERTY LINE
(C)	WATER SERVICE OVER STORM SEWER (INSULATE)

GENERAL NOTES

FLAG HYDRANTS.

EXTEND RODS ON ALL VALVES PER CITY DETAIL WAT-1

ALL DROP MANHOLES TO BE LINED PER CITY DETAIL SAN-04

SERVICE RISERS FOR SEWER MAINS LESS THAN 22' SHALL BE SCHEDULE 40 PVC (SOLVENT WELD JOINTS).
FOR DEPTHS GREATER THAN 22', SERVICE PIPE SHALL BE C900 FROM MAIN TO CONNECTION WITH TRANSITION FITTING FROM C900 TO SCH 40 INSTALLED AT CONNECTION LOCATION.

1" POLY WATER SERVICE OR APPROVED EQUAL SEE CITY DETAIL SER-2

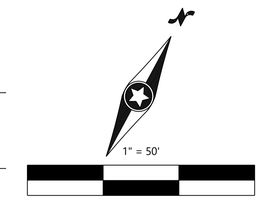

N:\0024429.00\DWG\CIVIL\FINALSTREET - UTILITY CONSTRUCTION\0024429C-UTF01.DWG

OAK CREEK PHASE 1

FINAL CONSTRUCTION

DESIGNED:	FDH II
CHECKED:	FDH II
DRAWN:	KFP/DJW
HORIZONTAL SCALE:	50'
VERTICAL SCALE:	5'

INITIAL ISSUE: 04/29/2022
REVISIONS:
1 05/24/22 CITY COMMENTS
2 . .
3 . .
4 . .

PREPARED FOR:

DR HORTON, INC. - MINNESOTA
20860 KENBRIDGE COURT, SUITE 100
LAKEVILLE, MINNESOTA 55044

I HEREBY CERTIFY THAT THIS PLAN WAS PREPARED BY ME OR UNDER MY DIRECT SUPERVISION AND THAT I AM A DULY LICENSED PROFESSIONAL ENGINEER UNDER THE LAWS OF THE STATE OF MINNESOTA

FRANCIS D. HAGEN
DATE: 05/24/22 LICENSE NO. 17716

OAK CREEK
CHASKA, MN

Westwood
Phone (952) 937-5150 12701 Whitewater Drive, Suite #300
Fax (952) 937-5822 Minnetonka, MN 55343
Toll Free (888) 937-5150 westwoodps.com
Westwood Professional Services, Inc.

SANITARY SEWER AND WATERMAIN CONSTRUCTION PLAN

PROJECT NUMBER: 0024429.00

SHEET NUMBER: 9 OF 28

DATE: 05/24/22

© 2022 Westwood Professional Services, Inc.

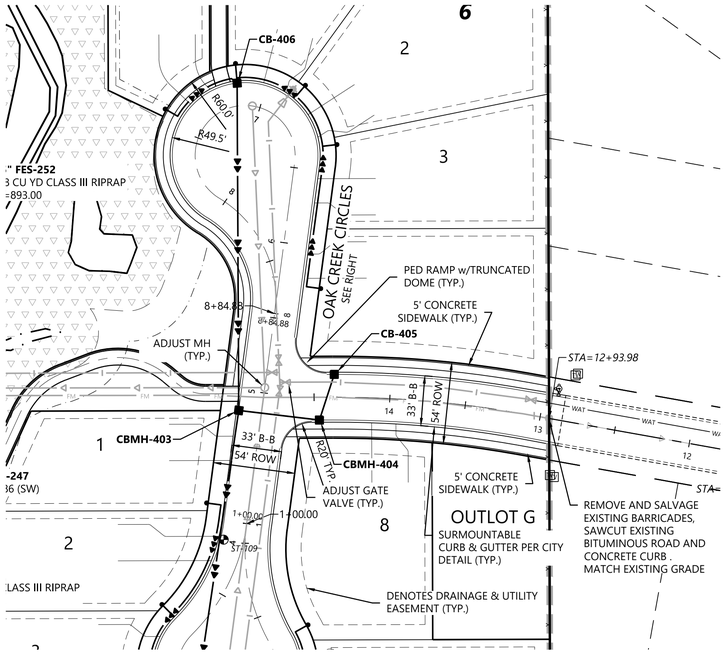

CLOVER PRESERVE LANE

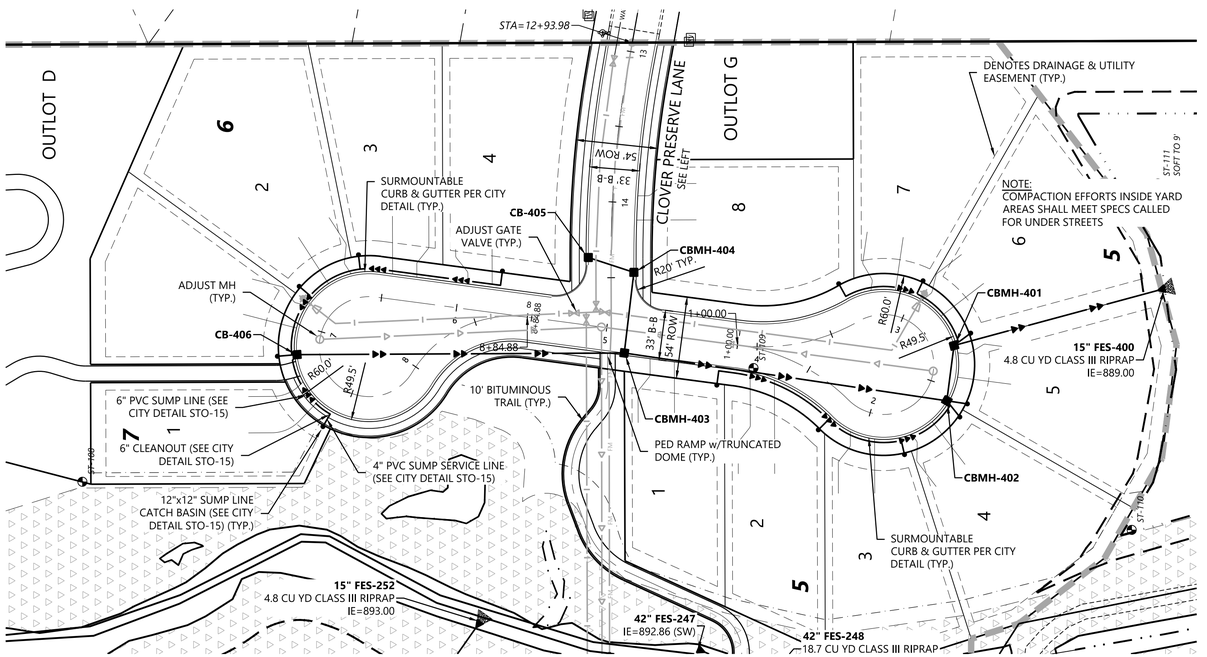

OAK CREEK CIRCLES

Call 48 Hours before digging:
811 or call811.com
Common Ground Alliance

LEGEND

EXISTING	PROPOSED	
900.00	× 900.00	GUTTER ELEVATION

GENERAL NOTES

1. RADIUS TO BE B618 CURB & GUTTER WITH 10' TRANSITIONS FROM SURMOUNTABLE CURB & GUTTER.
2. ALL RCP SHALL BE CLASS 5, UNLESS OTHERWISE NOTED.
3. ALL CATCH BASIN CASTINGS IN CURB SHALL BE SUMPED 0.15 FEET. MANHOLE CASTINGS IN PAVED AREAS SHALL BE SUMPED 0.05 FEET. RIM ELEVATIONS SHOWN ON THE PROFILES REFLECT THE SUMPED ELEVATIONS.

1" = 50'

0' 50' 100' 150'

FINAL CONSTRUCTION

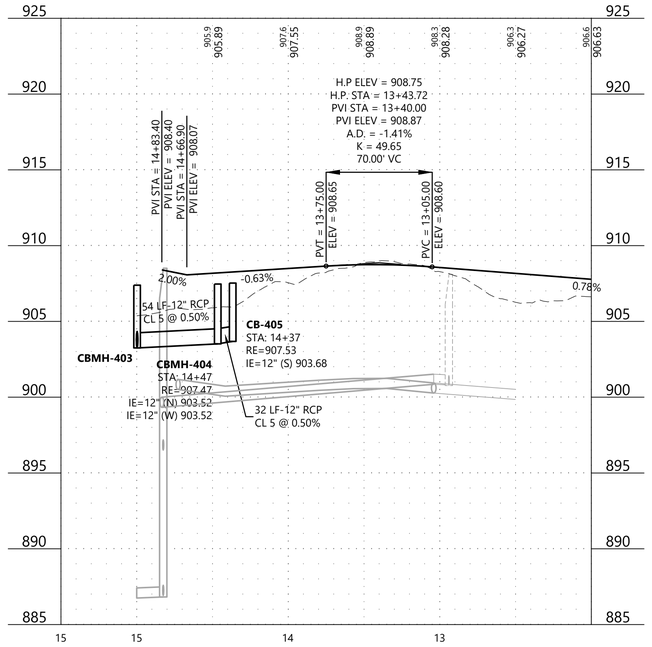

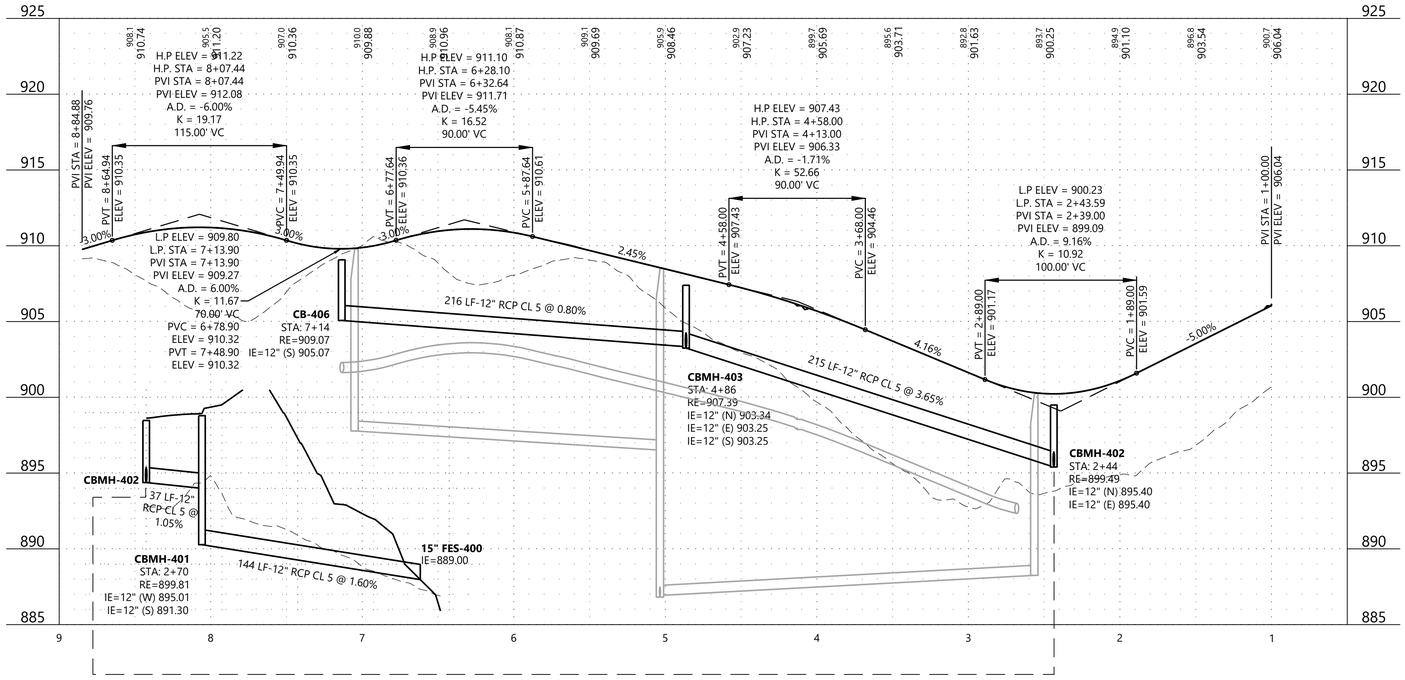

N:\0024429.00\DWG\CIVIL\FINALSTREET - UTILITY CONSTRUCTION\0024429C-STF01.DWG

OAK CREEK PHASE 1

DESIGNED:	FDH II
CHECKED:	FDH II
DRAWN:	KFP/DJW
HORIZONTAL SCALE:	50'
VERTICAL SCALE:	5'

INITIAL ISSUE: 04/29/2022
REVISIONS:
05/24/22 CITY COMMENTS

PREPARED FOR:

DR HORTON, INC. - MINNESOTA
20860 KENBRIDGE COURT, SUITE 100
LAKEVILLE, MINNESOTA 55044

I HEREBY CERTIFY THAT THIS PLAN WAS PREPARED BY ME OR UNDER MY DIRECT SUPERVISION AND THAT I AM A DULY LICENSED PROFESSIONAL ENGINEER UNDER THE LAWS OF THE STATE OF MINNESOTA.
FRANCIS D. HAGEN
DATE: 05/24/22 LICENSE NO. 17716

OAK CREEK
CHASKA, MN

Westwood
Phone (952) 937-5150 12701 Whitewater Drive, Suite #300
Fax (952) 937-5822 Minnetonka, MN 55343
Toll Free (888) 937-5150 westwoodps.com
Westwood Professional Services, Inc.

STORM SEWER AND STREET CONSTRUCTION

PROJECT NUMBER: 0024429.00

SHEET NUMBER: 10 OF 28
DATE: 05/24/22

© 2022 Westwood Professional Services, Inc.

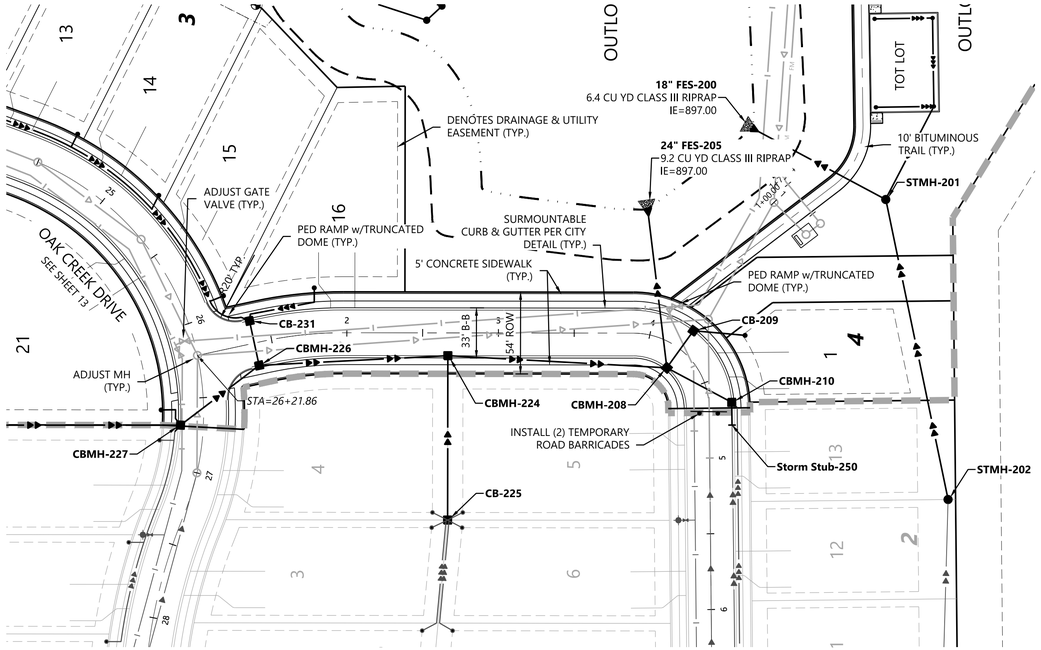

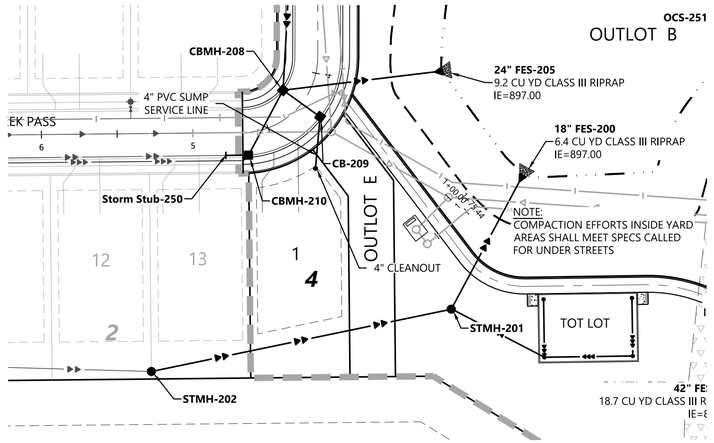

OAK CREEK PASS

PROFILE A

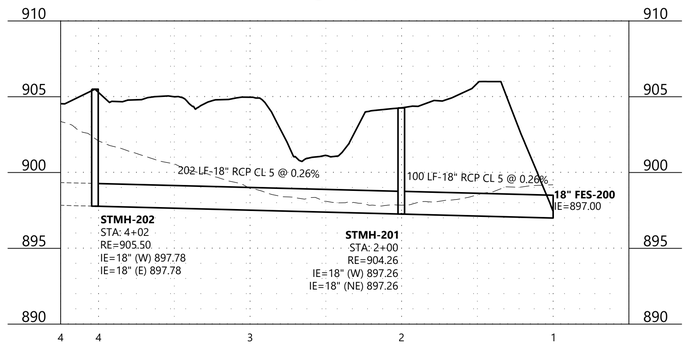

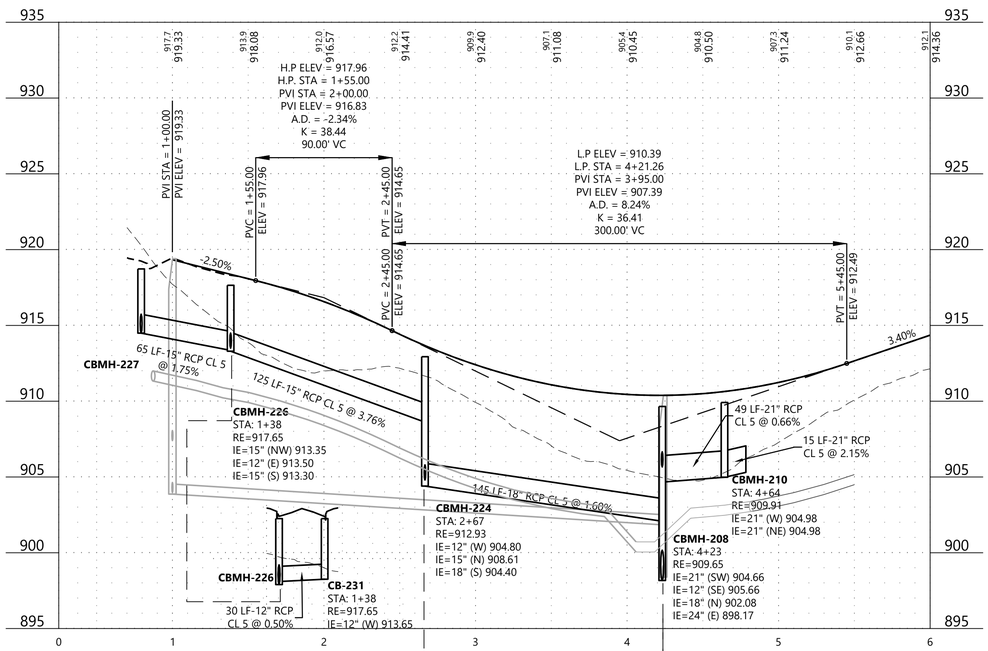

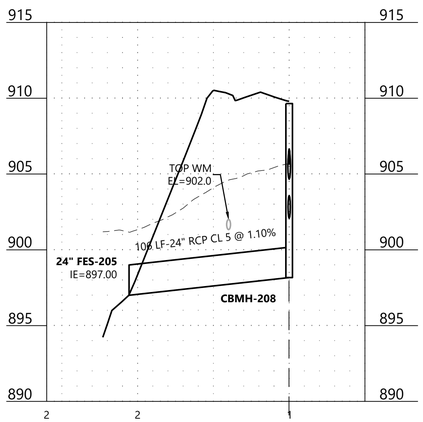

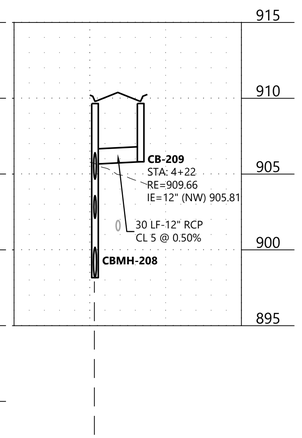

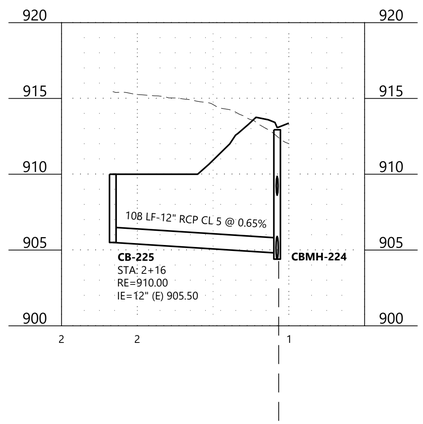

Call 48 Hours before digging:
811 or call811.com
Common Ground Alliance

LEGEND

EXISTING	PROPOSED	
900.00	× 900.00	GUTTER ELEVATION

GENERAL NOTES

1. RADIUS TO BE B618 CURB & GUTTER WITH 10' TRANSITIONS FROM SURMOUNTABLE CURB & GUTTER.
2. ALL RCP SHALL BE CLASS 5, UNLESS OTHERWISE NOTED.
3. ALL CATCH BASIN CASTINGS IN CURB SHALL BE SUMPED 0.15 FEET. MANHOLE CASTINGS IN PAVED AREAS SHALL BE SUMPED 0.05 FEET. RIM ELEVATIONS SHOWN ON THE PROFILES REFLECT THE SUMPED ELEVATIONS.

1" = 50'
0' 50' 100' 150'

FINAL CONSTRUCTION

N:\0024429.00\DWG\CIVIL\FINAL\STREET - UTILITY CONSTRUCTION\0024429C-STF01.DWG

OAK CREEK PHASE 1

DESIGNED: FDH II
CHECKED: FDH II
DRAWN: KFP/DJW
HORIZONTAL SCALE: 50'
VERTICAL SCALE: 5'

INITIAL ISSUE: 04/29/2022
REVISIONS:
1 05/24/22 CITY COMMENTS
2 . .
3 . .
4 . .
5 . .

PREPARED FOR:
DR HORTON, INC. - MINNESOTA
20860 KENBRIDGE COURT, SUITE 100
LAKEVILLE, MINNESOTA 55044

I HEREBY CERTIFY THAT THIS PLAN WAS PREPARED BY ME OR UNDER MY DIRECT SUPERVISION AND THAT I AM A DULY LICENSED PROFESSIONAL ENGINEER UNDER THE LAWS OF THE STATE OF MINNESOTA.
FRANCIS D. HAGEN
DATE: 05/24/22 LICENSE NO. 17716

OAK CREEK
CHASKA, MN

Westwood
Phone (952) 937-5150 12701 Whitewater Drive, Suite #300
Fax (952) 937-5822 Minnetonka, MN 55343
Toll Free (888) 937-5150 westwoodps.com
Westwood Professional Services, Inc.

STORM SEWER AND STREET CONSTRUCTION

PROJECT NUMBER: 0024429.00

SHEET NUMBER: 11 OF 28
DATE: 05/24/22

© 2022 Westwood Professional Services, Inc.

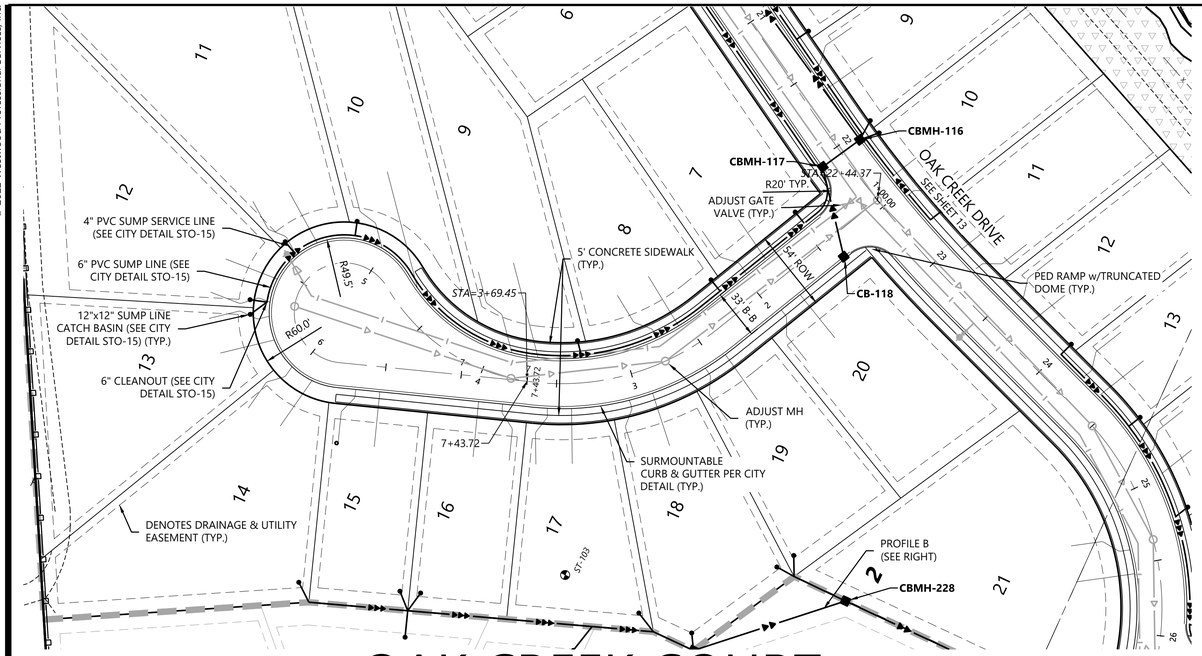

OAK CREEK COURT

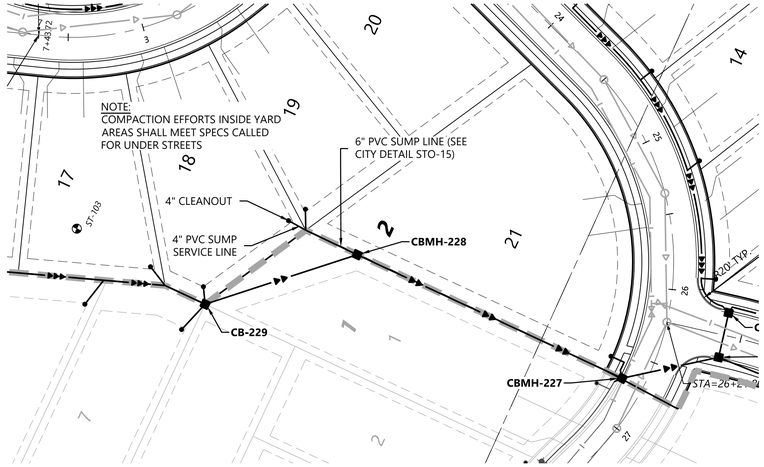

PROFILE B

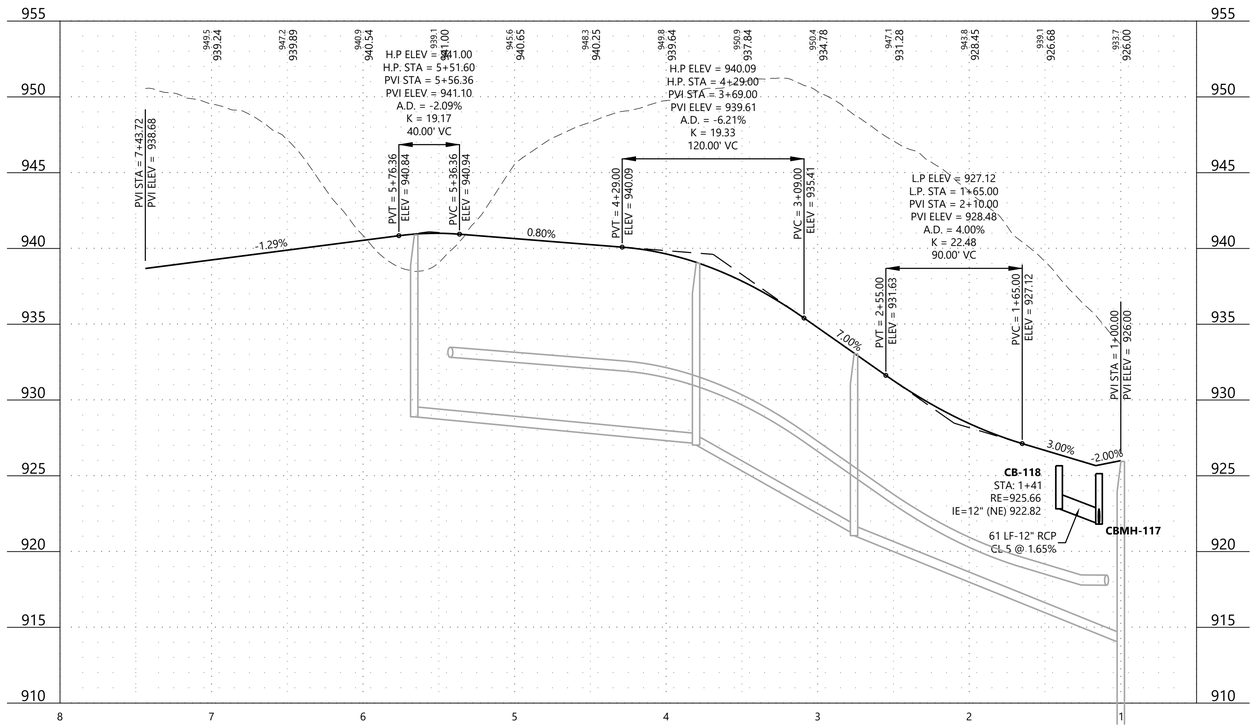

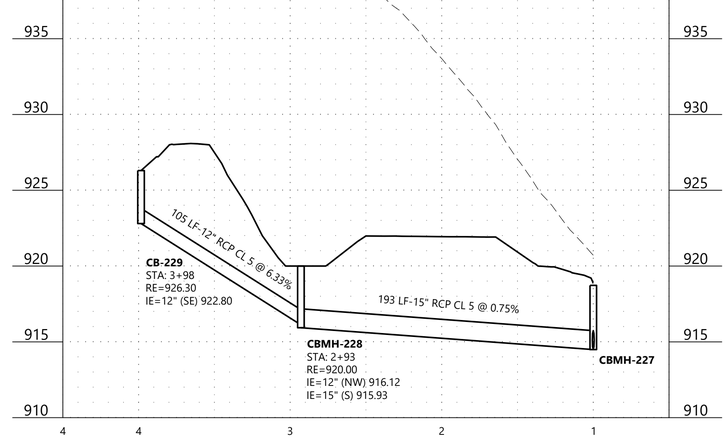

Call 48 Hours before digging:
811 or call811.com
Common Ground Alliance

LEGEND

EXISTING	PROPOSED	
900.00	× 900.00	GUTTER ELEVATION

GENERAL NOTES

1. RADIUS TO BE B618 CURB & GUTTER WITH 10' TRANSITIONS FROM SURMOUNTABLE CURB & GUTTER.
2. ALL RCP SHALL BE CLASS 5, UNLESS OTHERWISE NOTED.
3. ALL CATCH BASIN CASTINGS IN CURB SHALL BE SUMPED 0.15 FEET. MANHOLE CASTINGS IN PAVED AREAS SHALL BE SUMPED 0.05 FEET. RIM ELEVATIONS SHOWN ON THE PROFILES REFLECT THE SUMPED ELEVATIONS.

1" = 50'
0' 50' 100' 150'

FINAL CONSTRUCTION

N:\0024429.00\DWG\CIVIL\FINAL\STREET - UTILITY CONSTRUCTION\0024429C-STF01.DWG

OAK CREEK PHASE 1

DESIGNED:	FDH II
CHECKED:	FDH II
DRAWN:	KFP/DJW
HORIZONTAL SCALE:	50'
VERTICAL SCALE:	5'

INITIAL ISSUE: 04/29/2022
REVISIONS:
05/24/22 CITY COMMENTS

PREPARED FOR:
DR HORTON, INC. - MINNESOTA
20860 KENBRIDGE COURT, SUITE 100
LAKEVILLE, MINNESOTA 55044

I HEREBY CERTIFY THAT THIS PLAN WAS PREPARED BY ME OR UNDER MY DIRECT SUPERVISION AND THAT I AM A DULY LICENSED PROFESSIONAL ENGINEER UNDER THE LAWS OF THE STATE OF MINNESOTA.
FRANCIS D. HAGEN
DATE: 05/24/22 LICENSE NO. 17716

OAK CREEK
CHASKA, MN

Westwood
Phone (952) 937-5150 12701 Whitewater Drive, Suite #300
Fax (952) 937-5822 Minnetonka, MN 55343
Toll Free (888) 937-5150 westwoodps.com
Westwood Professional Services, Inc.

STORM SEWER AND STREET CONSTRUCTION

PROJECT NUMBER: 0024429.00

SHEET NUMBER: 12 OF 28
DATE: 05/24/22

© 2022 Westwood Professional Services, Inc.

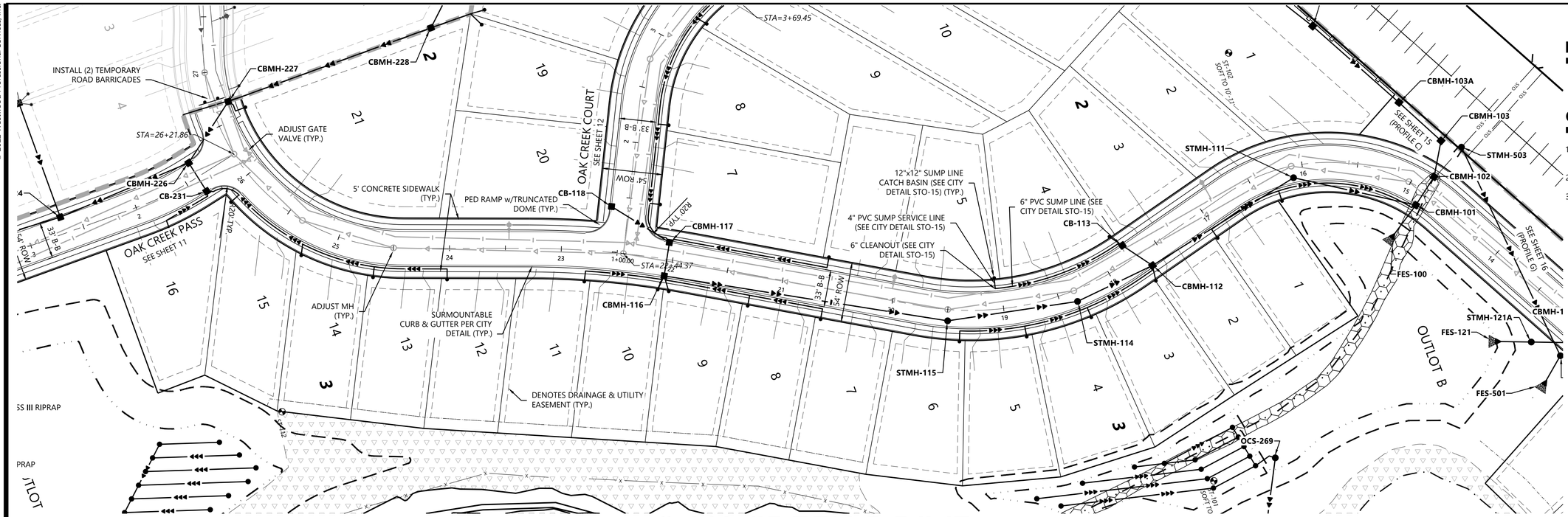

OAK CREEK DRIVE

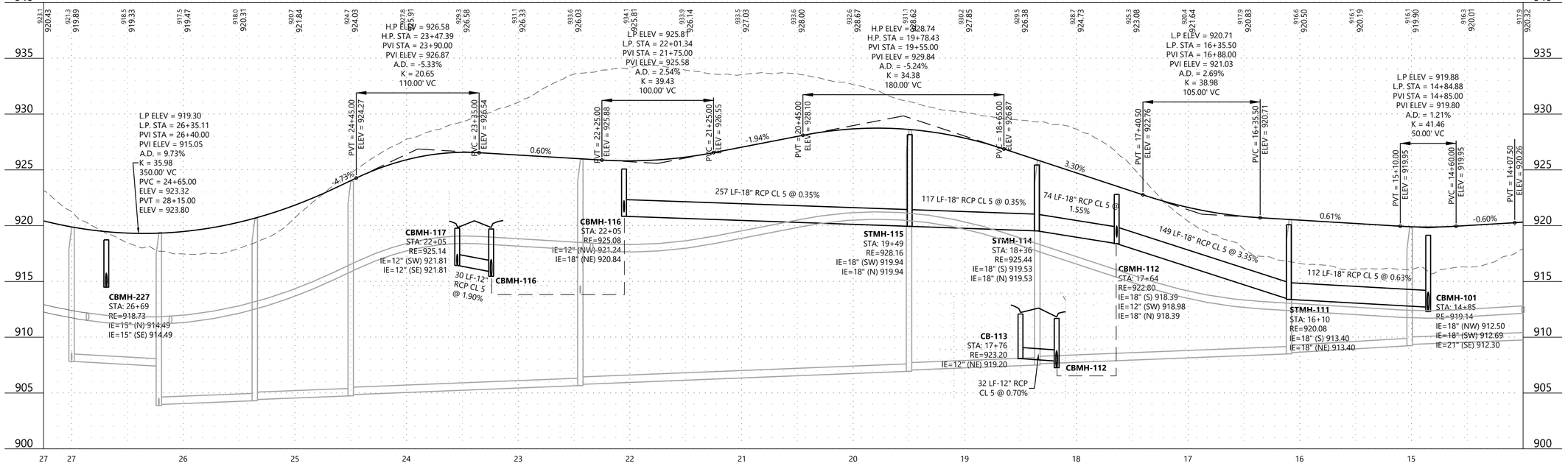

LEGEND

EXISTING	PROPOSED	
+ 900.00	× 900.00	GUTTER ELEVATION

Call 48 Hours before digging:
811 or call811.com
Common Ground Alliance

GENERAL NOTES

1. RADIUS TO BE B618 CURB & GUTTER WITH 10' TRANSITIONS FROM SURMOUNTABLE CURB & GUTTER.
2. ALL RCP SHALL BE CLASS 5, UNLESS OTHERWISE NOTED.
3. ALL CATCH BASIN CASTINGS IN CURB SHALL BE SUMPED 0.15 FEET. MANHOLE CASTINGS IN PAVED AREAS SHALL BE SUMPED 0.05 FEET. RIM ELEVATIONS SHOWN ON THE PROFILES REFLECT THE SUMPED ELEVATIONS.

1" = 50'
0' 50' 100' 150'

FINAL CONSTRUCTION

N:\0024429.00\DWG\CIVIL\FINAL\STREET - UTILITY CONSTRUCTION\0024429C-STF01.DWG

OAK CREEK PHASE 1

DESIGNED:	FDH II
CHECKED:	FDH II
DRAWN:	KFP/DJW
HORIZONTAL SCALE:	50'
VERTICAL SCALE:	5'

INITIAL ISSUE: 04/29/2022
REVISIONS:
1 05/24/22 CITY COMMENTS
2 . .
3 . .
4 . .
5 . .

PREPARED FOR:
DR HORTON, INC. - MINNESOTA
20860 KENBRIDGE COURT, SUITE 100
LAKEVILLE, MINNESOTA 55044

I HEREBY CERTIFY THAT THIS PLAN WAS PREPARED BY ME OR UNDER MY DIRECT SUPERVISION AND THAT I AM A DULY LICENSED PROFESSIONAL ENGINEER UNDER THE LAWS OF THE STATE OF MINNESOTA.
FRANCIS D. HAGEN
DATE: 05/24/22 LICENSE NO. 17716

OAK CREEK
CHASKA, MN

Westwood
Phone (952) 937-5150 12701 Whitewater Drive, Suite #300
Fax (952) 937-5822 Minnetonka, MN 55343
Toll Free (888) 937-5150 westwoodps.com
Westwood Professional Services, Inc.

STORM SEWER AND STREET CONSTRUCTION

PROJECT NUMBER: 0024429.00

SHEET NUMBER: 13 OF 28
DATE: 05/24/22

© 2022 Westwood Professional Services, Inc.

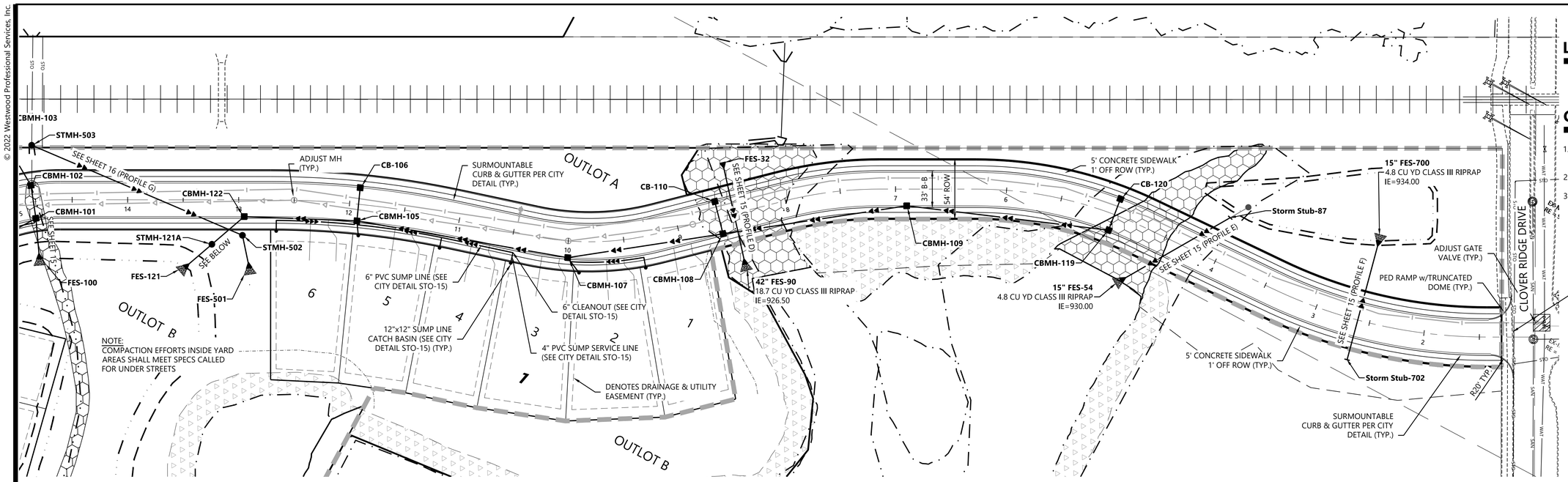

OAK CREEK DRIVE

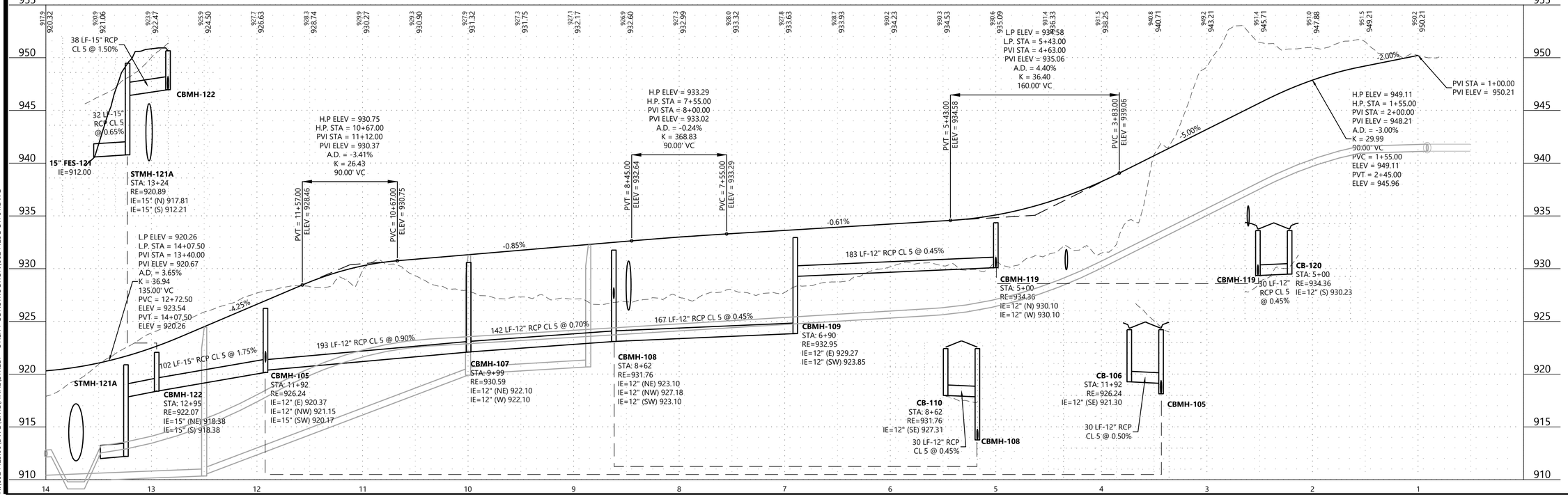

LEGEND

Call 48 Hours before digging:
811 or call811.com
Common Ground Alliance

EXISTING	PROPOSED	
+ 900.00	× 900.00	GUTTER ELEVATION

GENERAL NOTES

1. RADIUS TO BE B618 CURB & GUTTER WITH 10' TRANSITIONS FROM SURMOUNTABLE CURB & GUTTER.
2. ALL RCP SHALL BE CLASS 5, UNLESS OTHERWISE NOTED.
3. ALL CATCH BASIN CASTINGS IN CURB SHALL BE SUMPED 0.15 FEET. MANHOLE CASTINGS IN PAVED AREAS SHALL BE SUMPED 0.05 FEET. RIM ELEVATIONS SHOWN ON THE PROFILES REFLECT THE SUMPED ELEVATIONS.

REMOVE CONCRETE CURB, SAWCUT EXISTING BITUMINOUS ROAD AND CONCRETE CURB . MATCH EXISTING GRADE

1" = 50'

0' 50' 100' 150'

FINAL CONSTRUCTION

N:\0024429.00\DWG\CIVIL\FINALSTREET - UTILITY CONSTRUCTION\0024429C_STF01.DWG

OAK CREEK PHASE 1

DESIGNED:	FDH II
CHECKED:	FDH II
DRAWN:	KFP/DJW
HORIZONTAL SCALE:	50'
VERTICAL SCALE:	5'

INITIAL ISSUE: 04/29/2022
REVISIONS:
1 05/24/22 CITY COMMENTS
2 . .
3 . .
4 . .
5 . .

PREPARED FOR:

DR HORTON, INC. - MINNESOTA

20860 KENBRIDGE COURT, SUITE 100
LAKEVILLE, MINNESOTA 55044

I HEREBY CERTIFY THAT THIS PLAN WAS PREPARED BY ME OR UNDER MY DIRECT SUPERVISION AND THAT I AM A DULY LICENSED PROFESSIONAL ENGINEER UNDER THE LAWS OF THE STATE OF MINNESOTA.

FRANCIS D. HAGEN
DATE: 05/24/22 LICENSE NO. 17716

OAK CREEK

CHASKA, MN

Westwood

Phone (952) 937-5150 12701 Whitewater Drive, Suite #300
Fax (952) 937-5822 Minnetonka, MN 55343
Toll Free (888) 937-5150 westwoodps.com

Westwood Professional Services, Inc.

STORM SEWER AND STREET CONSTRUCTION

SHEET NUMBER: 14 OF 28

PROJECT NUMBER: 0024429.00 DATE: 05/24/22

© 2022 Westwood Professional Services, Inc.

Call 48 Hours before digging:
811 or call811.com
Common Ground Alliance

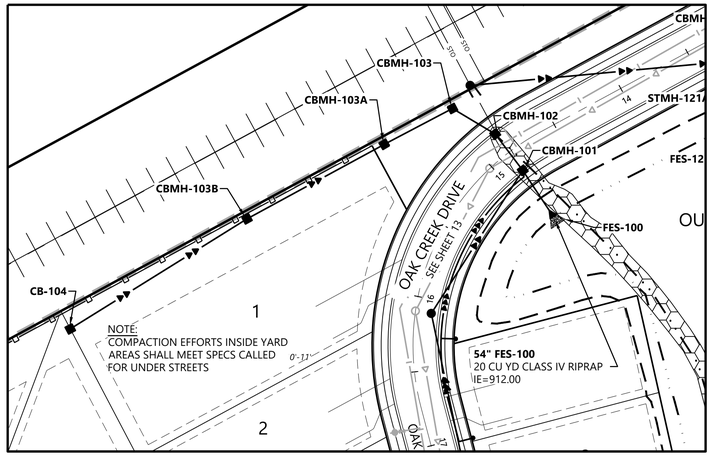

PROFILE C

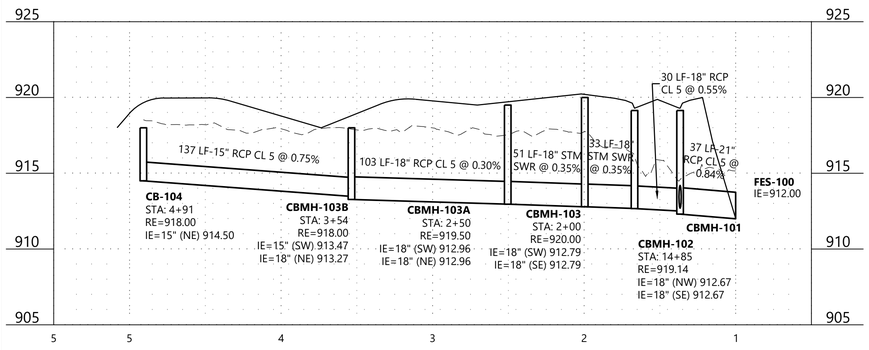

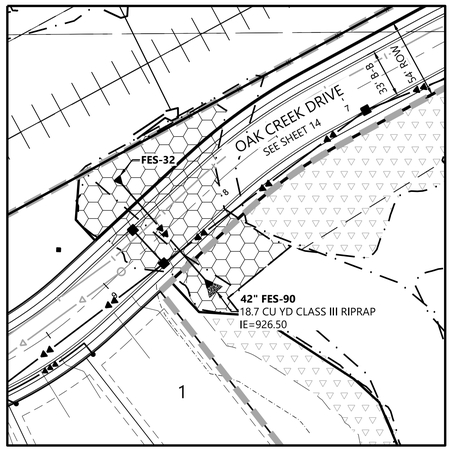

PROFILE D

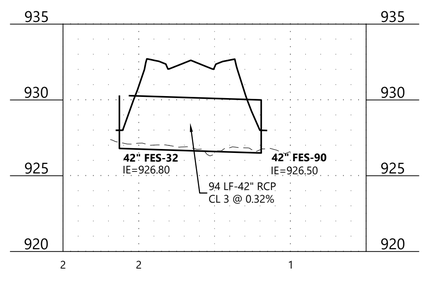

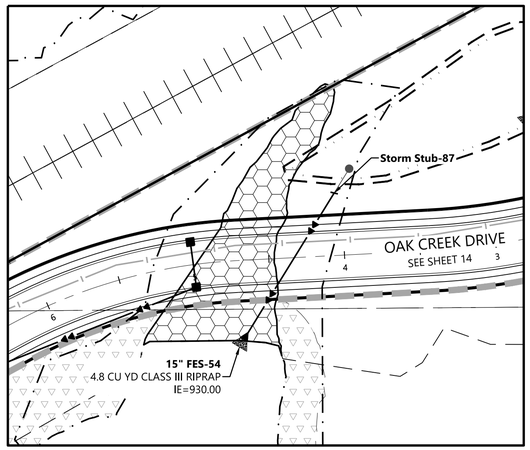

PROFILE E

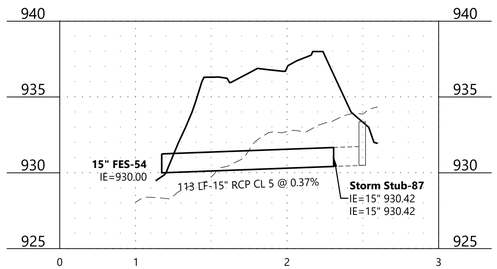

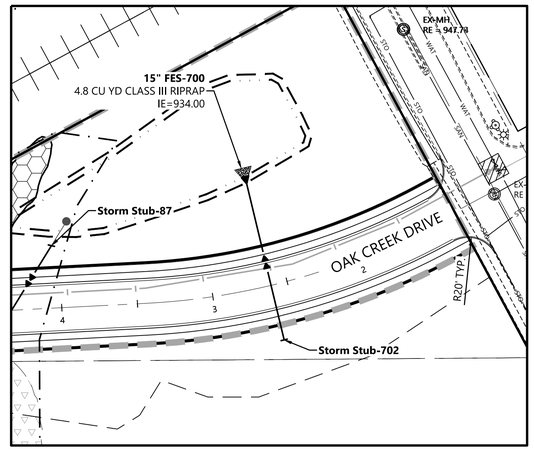

PROFILE F

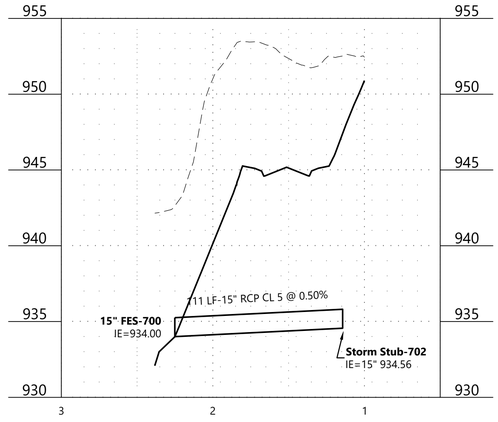

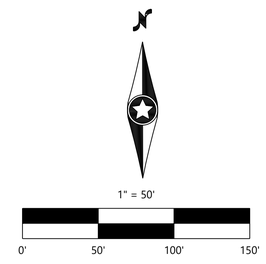

FINAL CONSTRUCTION

N:\0024429.00\DWG\CIVIL\FINAL\STREET - UTILITY CONSTRUCTION\0024429C-STF01.DWG

OAK CREEK PHASE 1

DESIGNED:	FDH II
CHECKED:	FDH II
DRAWN:	KFP/DJW
HORIZONTAL SCALE:	50'
VERTICAL SCALE:	5'

INITIAL ISSUE: 04/29/2022
REVISIONS:
1 05/24/22 CITY COMMENTS
2 . .
3 . .
4 . .
5 . .

PREPARED FOR:

DR HORTON, INC. - MINNESOTA
20860 KENBRIDGE COURT, SUITE 100
LAKEVILLE, MINNESOTA 55044

I HEREBY CERTIFY THAT THIS PLAN WAS PREPARED BY ME OR UNDER MY DIRECT SUPERVISION AND THAT I AM A DULY LICENSED PROFESSIONAL ENGINEER UNDER THE LAWS OF THE STATE OF MINNESOTA.
FRANCIS D. HAGEN
DATE: 05/24/22 LICENSE NO. 17716

OAK CREEK
CHASKA, MN

Westwood
Phone (952) 937-5150 12701 Whitewater Drive, Suite #300
Fax (952) 937-5822 Minnetonka, MN 55343
Toll Free (888) 937-5150 westwoodps.com
Westwood Professional Services, Inc.

BACKYARD STORM SEWER

PROJECT NUMBER: 0024429.00

SHEET NUMBER: 15 OF 28
DATE: 05/24/22

© 2022 Westwood Professional Services, Inc.

Call 48 Hours before digging:
811 or call811.com
Common Ground Alliance

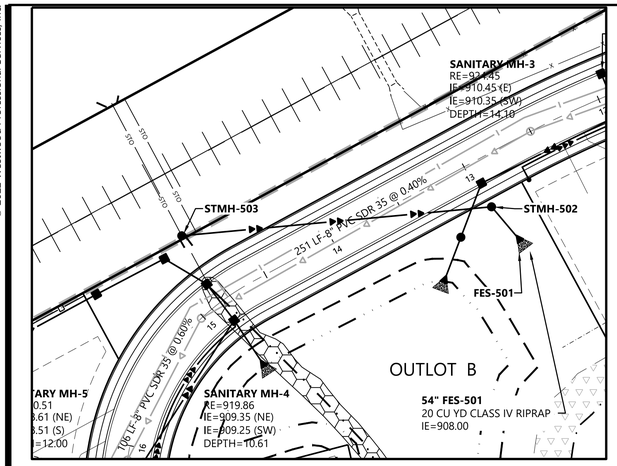

PROFILE G

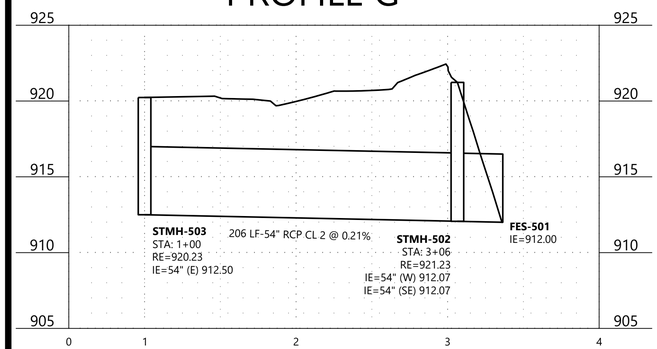

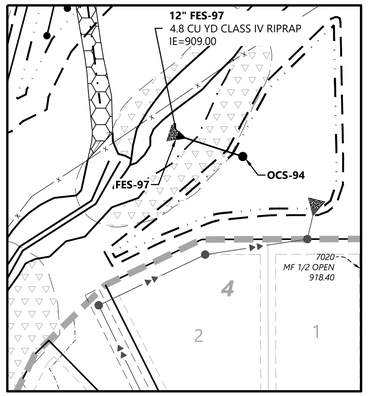

PROFILE H

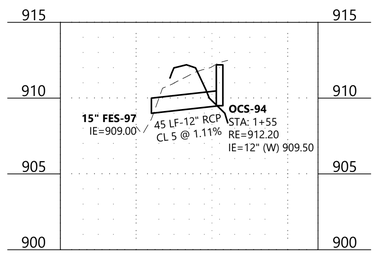

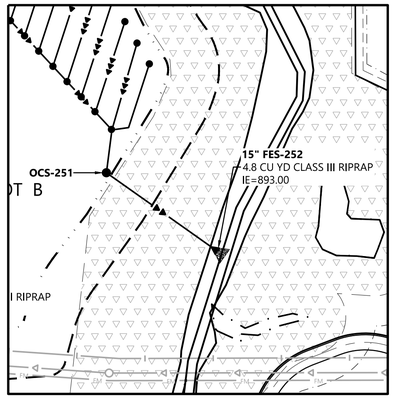

PROFILE I

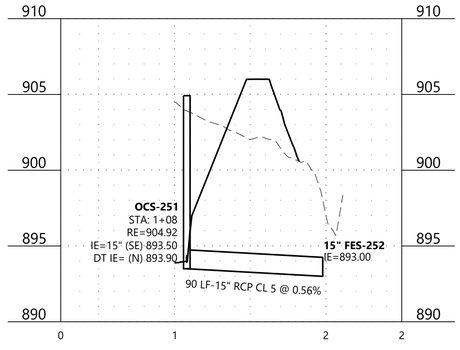

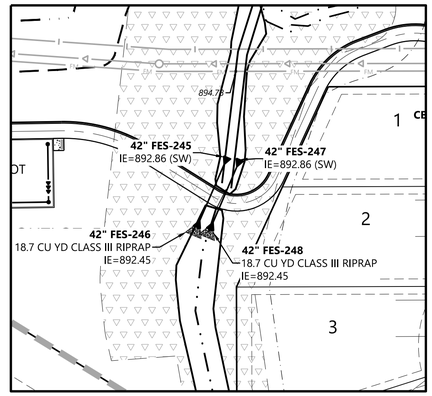

PROFILE J

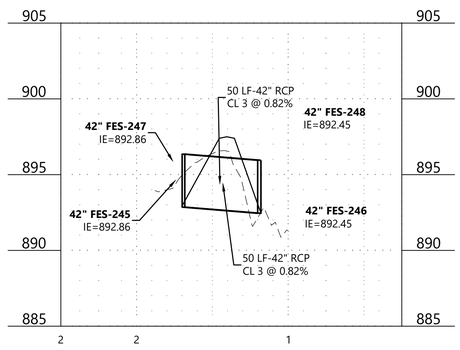

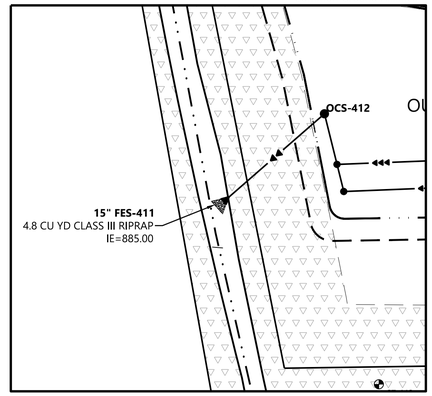

PROFILE K

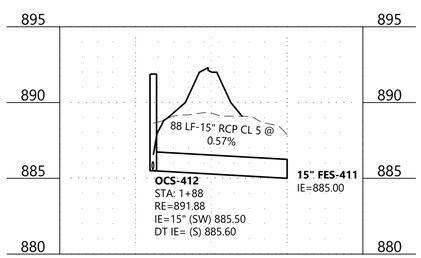

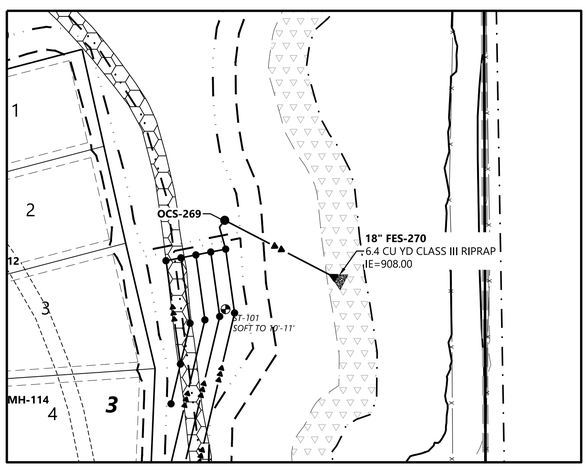

PROFILE L

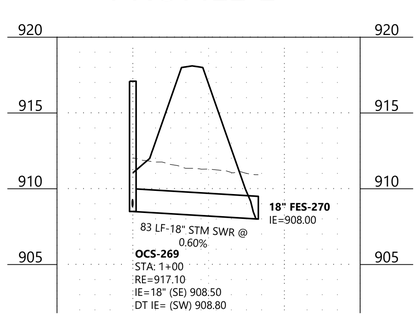

1" = 50'
0' 50' 100' 150'

FINAL CONSTRUCTION

OAK CREEK PHASE 1

N:\0024429.00\DWG\CIVIL\FINAL\STREET - UTILITY CONSTRUCTION\0024429C-STF01.DWG

DESIGNED: FDH II
CHECKED: FDH II
DRAWN: KFP/DJW
HORIZONTAL SCALE: 50'
VERTICAL SCALE: 5'

INITIAL ISSUE: 04/29/2022
REVISIONS:
1 05/24/22 CITY COMMENTS
2 . .
3 . .
4 . .
5 . .

PREPARED FOR:
DR HORTON, INC. - MINNESOTA
20860 KENBRIDGE COURT, SUITE 100
LAKEVILLE, MINNESOTA 55044

I HEREBY CERTIFY THAT THIS PLAN WAS PREPARED BY ME OR UNDER MY DIRECT SUPERVISION AND THAT I AM A DULY LICENSED PROFESSIONAL ENGINEER UNDER THE LAWS OF THE STATE OF MINNESOTA
FRANCIS D. HAGEN
DATE: 05/24/22 LICENSE NO. 17716

OAK CREEK
CHASKA, MN

Westwood
Phone (952) 937-5150 12701 Whitewater Drive, Suite #300
Fax (952) 937-5822 Minnetonka, MN 55343
Toll Free (888) 937-5150 westwoodps.com
Westwood Professional Services, Inc.

BACKYARD STORM SEWER

PROJECT NUMBER: 0024429.00

SHEET NUMBER: 16 OF 28
DATE: 05/24/22

© 2022 Westwood Professional Services, Inc.

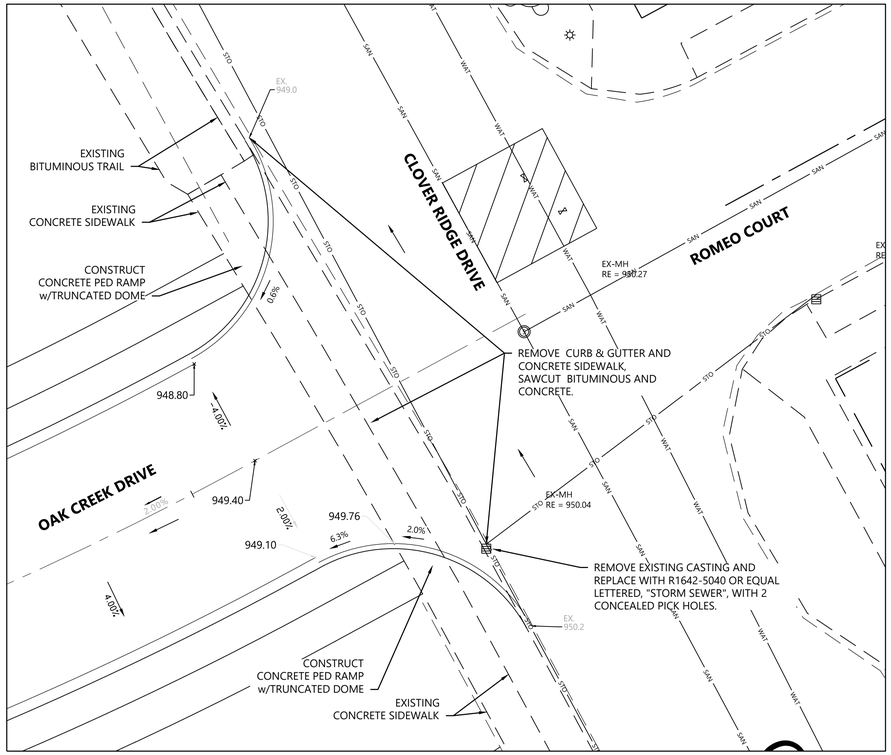

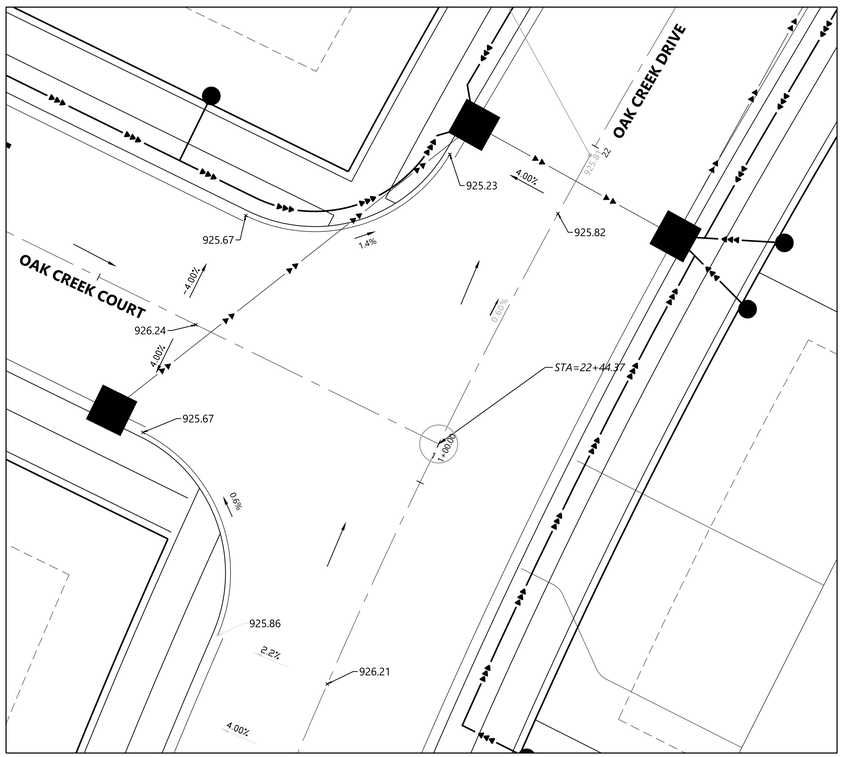

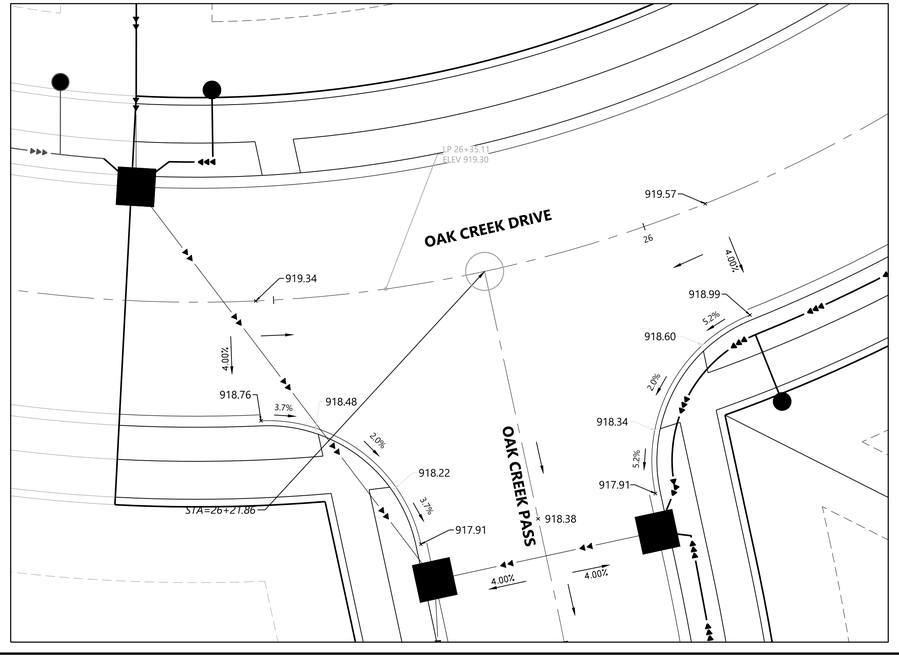

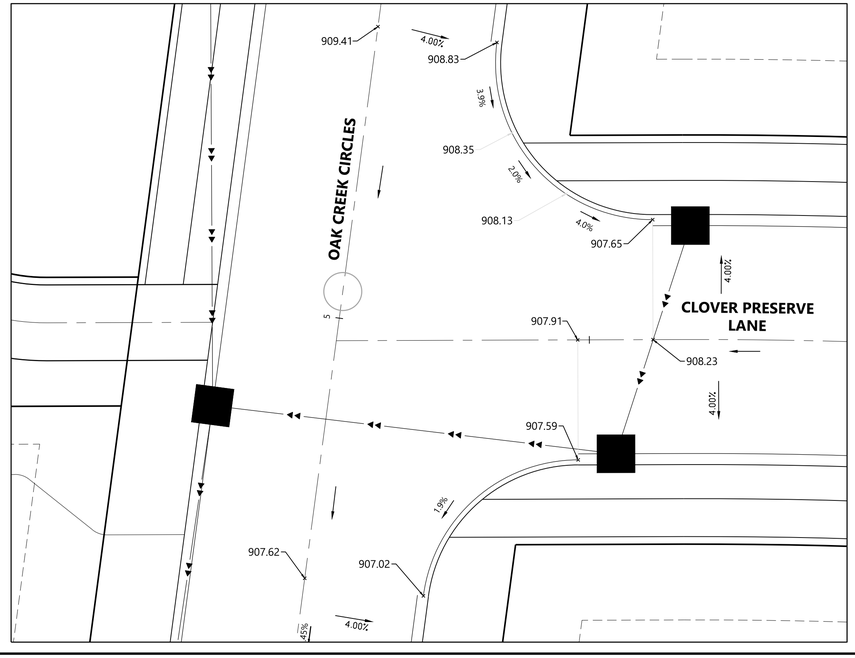

LEGEND

Call 48 Hours before digging:
811 or call811.com
Common Ground Alliance

EXISTING	PROPOSED	
900.00	× 900.00	GUTTER ELEVATION
	× TC 900.00	TOP OF CURB ELEVATION
	0.00%	FLOW DIRECTION
		FLOW LINE
		BACK OF CURB
STD		STORM SEWER
		LANDING AREA - MINIMUM AND MAXIMUM 2.0% SLOPE IN ALL DIRECTIONS
		TRUNCATED DOMES

0' 10' 20' 30'

N:\0024429.00\DWG\CIVIL\FINALS\STREET - UTILITY CONSTRUCTION\0024429C-IDF01.DWG

OAK CREEK

DESIGNED:	FDH II
CHECKED:	FDH II
DRAWN:	KFP/DJW
HORIZONTAL SCALE:	10'
VERTICAL SCALE:	

INITIAL ISSUE: 04/29/2022
REVISIONS:
1 05/24/22 CITY COMMENTS
2 . .
3 . .
4 . .

PREPARED FOR:

DR HORTON, INC. - MINNESOTA
20860 KENBRIDGE COURT, SUITE 100
LAKEVILLE, MINNESOTA 55044

I HEREBY CERTIFY THAT THIS PLAN WAS PREPARED BY ME OR UNDER MY DIRECT SUPERVISION AND THAT I AM A DULY LICENSED PROFESSIONAL ENGINEER UNDER THE LAWS OF THE STATE OF MINNESOTA.

FRANCIS D. HAGEN
DATE: 05/24/22 LICENSE NO. 17716

OAK CREEK
CHASKA, MN

Westwood
Phone (952) 937-5150 12701 Whitewater Drive, Suite #300
Fax (952) 937-5822 Minnetonka, MN 55343
Toll Free (888) 937-5150 westwoodps.com
Westwood Professional Services, Inc.

INTERSECTION DETAILS

SHEET NUMBER: 17 OF 28
PROJECT NUMBER: 0024429.00
DATE: 05/24/22

© 2022 Westwood Professional Services, Inc.

Call 48 Hours before digging:
811 or call811.com
Common Ground Alliance

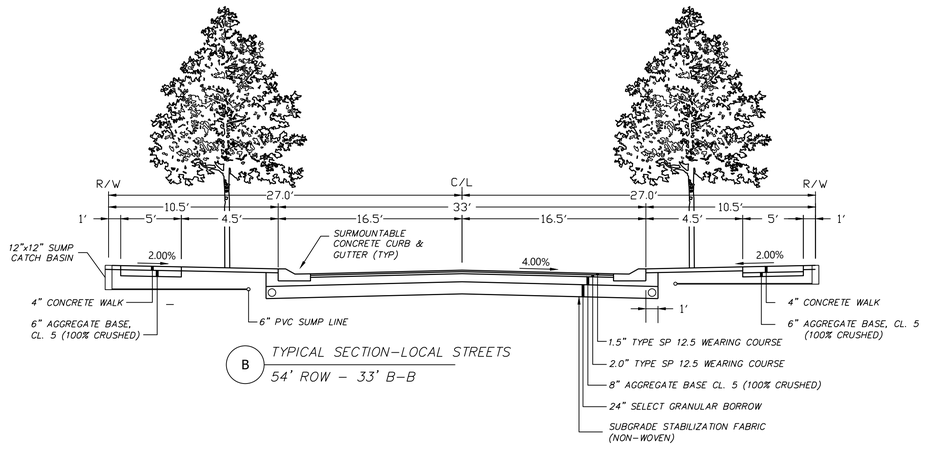

B TYPICAL SECTION–LOCAL STREETS
54' ROW – 33' B-B

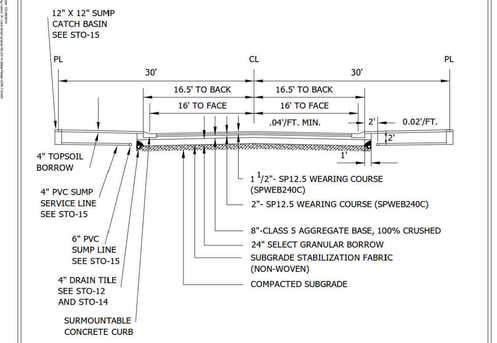

STANDARD STREET SECTION (7 TON)

NOTES:
1. ALL ORGANIC OR OTHER UNSUITABLE MATERIALS SHALL BE REMOVED FROM BENEATH THE ROADWAY.
2. A TEST ROLL OF THE PREPARED SUBGRADE SHALL BE PERFORMED BY THE OWNER IN THE PRESENCE OF A CITY INSPECTOR. THE CITY HAS THE AUTHORITY TO REQUIRE ADDITIONAL SUBGRADE CORRECTION OR ELIMINATE THE STABILIZATION FABRIC.
3. THE CITY RESERVES THE RIGHT TO MODIFY STREET SECTION AS REQUIRED.
4. NO CONCRETE WORK OR BITUMINOUS PAVING SHALL OCCURE AFTER OCTOBER 31ST UNLESS AUTHORIZED BY THE CITY OF CHASKA.
5. STREET WIDTH TO BE DETERMINED BY PROJECTED TRAFFIC VOLUMES.
6. RECYCLE MATERIAL ACCEPTED AS CLASS 5 AGGREGATE BASE SUBSTITUTE IF MEETING GUIDELINES.

Stantec
2335 Highway 36 W
St. Paul, MN 55113
www.stantec.com

TYPICAL SECTIONS FOR RESIDENTIAL STREETS 7 TON SECTION

CHASKA, MINNESOTA

LAST REVISION: JUNE 2012

PLATE NO. STR-7

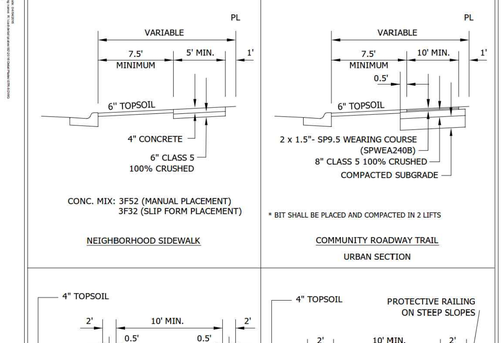

Stantec
2335 Highway 36 W
St. Paul, MN 55113
www.stantec.com

TYPICAL PLACEMENT AND SECTION FOR WALKS AND TRAILS

CHASKA, MINNESOTA

LAST REVISION: APRIL 2016

PLATE NO. STR-9

N:\0024429.00\DWG\CIVIL\FINAL\STREET - UTILITY CONSTRUCTION\0024429DTF01.DWG

OAK CREEK

DESIGNED: FDH II
CHECKED: FDH II
DRAWN: KFP/DJW
HORIZONTAL SCALE:
VERTICAL SCALE:

INITIAL ISSUE: 04/29/2022
REVISIONS:
1 05/24/22 CITY COMMENTS
2 . .
3 . .
4 . .
5 . .

PREPARED FOR:

DR HORTON, INC. - MINNESOTA
20860 KENBRIDGE COURT, SUITE 100
LAKEVILLE, MINNESOTA 55044

I HEREBY CERTIFY THAT THIS PLAN WAS PREPARED BY ME OR UNDER MY DIRECT SUPERVISION AND THAT I AM A DULY LICENSED PROFESSIONAL ENGINEER UNDER THE LAWS OF THE STATE OF MINNESOTA.
FRANCIS D. HAGEN
DATE: 05/24/22 LICENSE NO. 17716

OAK CREEK
CHASKA, MN

Westwood
Phone (952) 937-5150 12701 Whitewater Drive, Suite #300
Fax (952) 937-5822 Minnetonka, MN 55343
Toll Free (888) 937-5150 westwoodps.com
Westwood Professional Services, Inc.

TYPICAL STREET SECTIONS

PROJECT NUMBER: 0024429.00

SHEET NUMBER: 18 OF 28

DATE: 05/24/22

© 2022 Westwood Professional Services, Inc.

Call 48 Hours before digging:
811 or call811.com
Common Ground Alliance

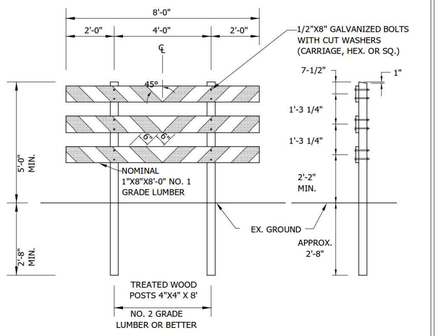

NOTE
THE BARRICADE BOARD FACE SURFACES SHALL BE FULLY RELECTORIZED IN ALTERNATE SILVER-WHITE AND RED STRIPING, USING A REFLECTIVE SHEETING CONFORMING TO THE REQUIREMENTS OF MNDOT SPEC. 3352.

PRIOR TO INSTALLING THE REFLECTIVE SHEETING, THE BARRICADE BOARDS SHALL BE GIVEN A COMPLETE COATING OF WHITE WOOD PRIMER PAINT FOLLOWED BY A SECOND COAT OF WHITE EXTERIOR APPLIED ONLY TO THE SURFACES NOT COVERED WITH REFLECTIVE SHEETING.

THE BARRICADE BOARDS SHALL BE COMPLETELY PAINTED AND RELECTORIZED SHEETING APPLIED BEFORE BEING INSTALLED ON THE POSTS.

THE PLACEMENT OF THE BARRICADE SHALL BE 10'-0" FROM THE END OF THE BITUMINOUS ROAD WITH THE BARRICADE CENTERED ON THE ROADWAY FACING THE FLOW OF TRAFFIC.

Stantec
2335 Highway 36 W
St. Paul, MN 55113
www.stantec.com

PERMANENT BARRICADE
CHASKA, MINNESOTA

LAST REVISION: MARCH 2008
PLATE NO. GEN-4

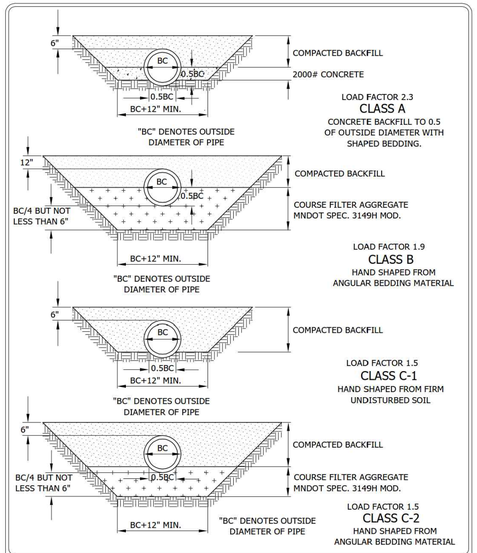

Stantec
2335 Highway 36 W
St. Paul, MN 55113
www.stantec.com

BEDDING METHODS FOR RCP OR DIP
CHASKA, MINNESOTA

LAST REVISION: MARCH 2001
PLATE NO. GEN-6

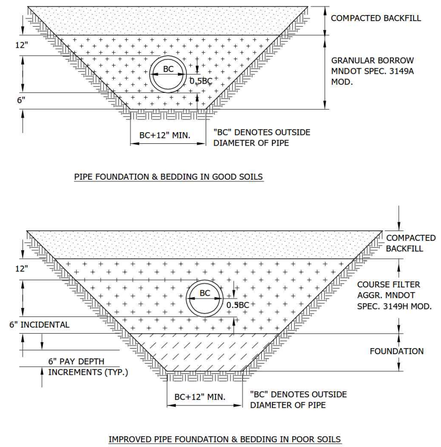

Stantec
2335 Highway 36 W
St. Paul, MN 55113
www.stantec.com

BEDDING METHODS FOR PVC
CHASKA, MINNESOTA

LAST REVISION: MARCH 2008
PLATE NO. GEN-7

NOTE: WATER MAIN BURIED LESS THAN 7.5' TO BE APPROVED BY OWNER

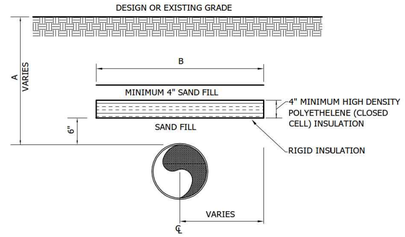

NOTE: PIPE SHALL BE CENTERED UNDER INSULATION UNLESS OTHERWISE SPECIFIED. STAGGER/ OFFSET JOINTS 2' MINIMUM BETWEEN SHEET LAYERS.

COVER OVER PIPE - A	WIDTH OF INSULATING BOARD - B
2'	11'
3'	9'
4'	7'
5'	5'
6'	3'

Stantec
2335 Highway 36 W
St. Paul, MN 55113
www.stantec.com

INSULATION DETAIL
CHASKA, MINNESOTA

LAST REVISION: APRIL 2016
PLATE NO. GEN-8

PRECAST INVERT WITH A MINIMUM 1% THROUGH SLOPE REQUIRED.

PRECAST INVERT MUST BE 1/2 DIAMETER OF THE PIPE AND BENCHES SLOPED 2" TOWARD THE INVERT.

FRAME	A	B
R1642-2310B	27"	7"
R1755G	27"	7"

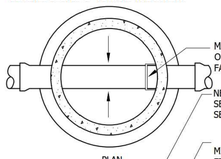

MANHOLE STEPS SHALL BE PLACED SO THAT OFFSET VERTICAL PORTION OF CONE IS FACING DOWNSTREAM.

NEENAH COVER **R-1642-5001**, LETTERED "SANITARY SEWER" WITH 2 CONCEALED PICK HOLES AND SELF SEALING LID. SEE SPECIFICATION FOR CASTING NUMBER.

MINIMUM OF 2 MAXIMUM OF 4 ADJUSTMENT RINGS. FINAL RING MATERIAL AND ADHESIVE TO BE SPECIFIED BY OWNER ON A PROJECT BASIS.

MAXIMUM 20"ADJUSTMENT ALLOWED INCLUDING RINGS AND CASTING.

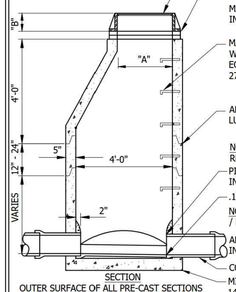

MANHOLE STEPS, COPOLYMER POLYPROPYLENE PLASTIC, WITH 1/2" GRADE 60 STEEL REINFORCEMENT OR EQUAL, 16" ON CENTER. (NO STEPS ALLOWED IN UPPER 27" BARREL)

ALL JOINTS IN MANHOLE TO HAVE SELF LUBRICATING RUBBER GASKETS AND RAMNECK.

NOTE: ALL INFILTRATION AREAS SHALL BE REPAIRED UNTIL MANHOLE IS WATER TIGHT.

PIPE SHALL BE CUT 2" FROM INSIDE FACE OF WALL.

.1' DROP ACROSS INVERTS MIN.

NOTE: KOR-N-SEAL MANHOLE TO BE USED FOR PIPE / MANHOLE CONNECTION.

ALL DOG HOUSES SHALL BE GROUTED ON INSIDE OF MANHOLE.

COMPACT TO TOP OF PIPE, TO FIRST JOINT.

MINIMUM THICKNESS OF PRECAST BASE IS 6" FOR 14' DEEP OR LESS, AND INCREASES 1" IN THICKNESS FOR EVERY 4' OF DEPTH GREATER THAN 14'.

SECTION

OUTER SURFACE OF ALL PRE-CAST SECTIONS SHALL RECEIVE 2 COATS OF BITUMINOUS DAMP PROOFING (SEE ENGINEERING GUIDELINES OR PROJECT SPECIFICATIONS FOR MORE DETAILS) .

Stantec
2335 Highway 36 W
St. Paul, MN 55113
www.stantec.com

SANITARY SEWER MANHOLE
CHASKA, MINNESOTA

LAST REVISION: MARCH 2018
PLATE NO. SAN-1

PRECAST INVERT WITH A MINIMUM 1% THROUGH SLOPE REQUIRED.

PRECAST INVERT MUST BE 1/2 DIAMETER OF THE PIPE AND BENCHES SLOPED 2" TOWARD THE INVERT.

FRAME	A	B
R16420245	27"	7"
R1755G	27"	7"

OUTER SURFACE OF ALL PRE-CAST SECTIONS SHALL RECEIVE 2 COATS OF BITUMINOUS DAMP PROOFING (SEE ENGINEERING GUIDELINES OR PROJECT SPECIFICATIONS FOR MORE DETAILS) .

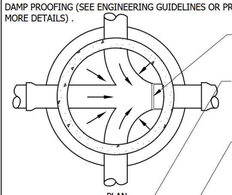

MANHOLE STEPS SHALL BE PLACED SO THAT OFFSET VERTICAL PORTION OF CONE IS FACING DOWNSTREAM.

NEENAH COVER **R1642-5001**, LETTERED "SANITARY SEWER" WITH 2 CONCEALED PICK HOLES AND SELF SEALING LID. SEE SPECIFICATIONS FOR CASTING NUMBER

MINIMUM OF 2 MAXIMUM OF 4 ADJUSTING RINGS. FINAL RING MATERIAL AND ADHESIVE TO BE SPECIFIED BY OWNER ON A PROJECT BASIS.

MAXIMUM 20" ADJUSTMENT ALLOWED INCLUDING RINGS AND CASTING

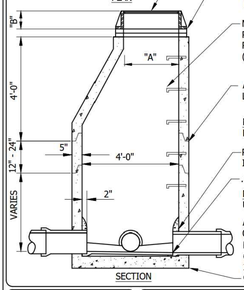

MANHOLE STEPS, COPOLYMER POLYPROPYLENE PLASTIC, WITH 1/2" GRADE 60 STEEL REINFORCEMENT OR EQUAL, 16" ON CENTER. (NO STEPS ALLOWED IN UPPER 27" BARREL)

ALL JOINTS IN MANHOLE TO HAVE SELF LUBRICATING RUBBER GASKETS AND RAMNECK.

NOTE: ALL INFILTRATION AREAS SHALL BE REPAIRED UNTIL MANHOLE IS WATER TIGHT.

PIPE SHALL BE CUT OUT 2" FROM INSIDE FACE OF WALL.

.1' DROP ACROSS INVERTS (MIN.)

NOTE: KOR-N-SEAL MANHOLE TO BE USED FOR PIPE / MANHOLE CONNECTION.

ALL DOG HOUSES SHALL BE GROUTED ON INSIDE OF MANHOLE.
MINIMUM THICKNESS OF PRECAST BASE IS 6" FOR 14' DEEP OR LESS, AND INCREASES 1" IN THICKNESS FOR EVERY 4' OF DEPTH GREATER THAN 14'.

SECTION

Stantec
2335 Highway 36 W
St. Paul, MN 55113
www.stantec.com

SANITARY SEWER JUNCTION MANHOLE
CHASKA, MINNESOTA

LAST REVISION: MARCH 2018
PLATE NO. SAN-2

FRAME	A	B
R1642-2310B	27"	7"
R1755G	27"	7"

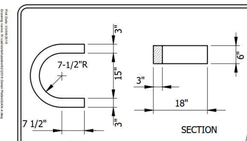

HORSESHOE DETAILS

NEENAH COVER **R-1642-5001**, LETTERED "SANITARY SEWER", WITH 2 CONCEALED PICK HOLES AND SELF SEALING LID. SEE SPECS. FOR CASTING NUMBERS.

MINIMUM OF 2 MAXIMUM OF 4 ADJUSTMENT RINGS. FINAL RING MATERIAL AND ADHESIVE TO BE SPECIFIED BY OWNER ON A PROJECT BASIS.

- MAXIMUM 20" ADJUSTMENT ALLOWED INCLUDING RINGS AND CASTING.

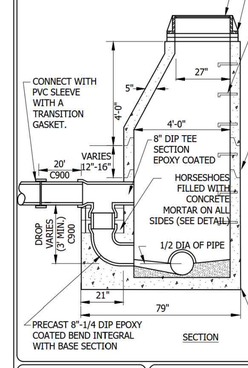

- MANHOLE STEPS, COPOLYMER POLYPROPYLENE PLASTIC, WITH 1/2" GRADE 60 STEEL REINFORCEMENT OR EQUAL 16" ON CENTER. (NO STEPS ALLOWED IN UPPER 27" BARREL.)
- MANHOLE STEPS SHALL BE PLACED SO THAT OFFSET VERTICAL PORTION OF CONE IS FACING DOWNSTREAM.

ALL JOINTS IN MANHOLE TO HAVE SELF LUBRICATING RUBBER GASKETS AND RAMNECK.

- NOTE: ALL INFILTRATION AREAS SHALL BE REPAIRED UNTIL MANHOLE IS WATER TIGHT.
- NOTE: OUTER SURFACE OF ALL PRE-CAST SECTIONS SHALL RECEIVE 2 COATS OF BITUMINOUS DAMP PROOFING (SEE ENGINEERING GUIDELINES OR PROJECT SPECIFICATIONS FOR MORE DETAILS).
- INTERIOR MANHOLE WALL SHALL BE COMPLETELY LINED WITH HDPE, SEE SPEC FOR MORE DETAILS.
- PIPE SHALL BE CUT OUT FLUSH WITH INSIDE FACE OF WALL.
- NOTE: KOR-N-SEAL MANHOLE TO BE USED FOR PIPE / MANHOLE CONNECTION.
- ALL DOG HOUSES SHALL BE GROUTED ON INSIDE OF MANHOLE.

PRECAST INVERT MUST BE 1/2 DIAMETER OF PIPE AND BENCHES SLOPED 2" TOWARD INVERT.

Stantec
2335 Highway 36 W
St. Paul, MN 55113
www.stantec.com

SANITARY SEWER DROP INLET MANHOLE
CHASKA, MINNESOTA

LAST REVISION: MARCH 2018
PLATE NO. SAN-4

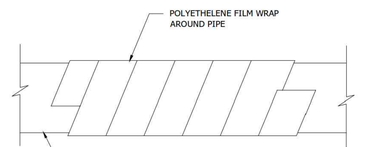

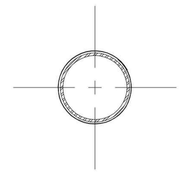

PIPE SECTION

Stantec
2335 Highway 36 W
St. Paul, MN 55113
www.stantec.com

TYPICAL FORCEMAIN INSTALLATION
CHASKA, MINNESOTA

LAST REVISION: APRIL 2004
PLATE NO. SAN-7

N:\0024429.00\DWG\CIVIL\FINALSTREET - UTILITY CONSTRUCTION\0024429DTF01.DWG

OAK CREEK

DESIGNED: FDH II
CHECKED: FDH II
DRAWN: KFP/DJW
HORIZONTAL SCALE:
VERTICAL SCALE:

INITIAL ISSUE: 04/29/2022
REVISIONS:
1 05/24/22 CITY COMMENTS
2 . .
3 . .
4 . .
5 . .

PREPARED FOR:
DR HORTON, INC. - MINNESOTA
20860 KENBRIDGE COURT, SUITE 100
LAKEVILLE, MINNESOTA 55044

I HEREBY CERTIFY THAT THIS PLAN WAS PREPARED BY ME OR UNDER MY DIRECT SUPERVISION AND THAT I AM A DULY LICENSED PROFESSIONAL ENGINEER UNDER THE LAWS OF THE STATE OF MINNESOTA
FRANCIS D. HAGEN
DATE: 05/24/22 LICENSE NO. 17716

OAK CREEK
CHASKA, MN

Westwood
Phone (952) 937-5150 12701 Whitewater Drive, Suite #300
Fax (952) 937-5822 Minnetonka, MN 55343
Toll Free (888) 937-5150 westwoodps.com
Westwood Professional Services, Inc.

DETAILS

PROJECT NUMBER: 0024429.00

SHEET NUMBER: 19 OF 28
DATE: 05/24/22

© 2022 Westwood Professional Services, Inc.

Call 48 Hours before digging:
811 or call811.com
Common Ground Alliance

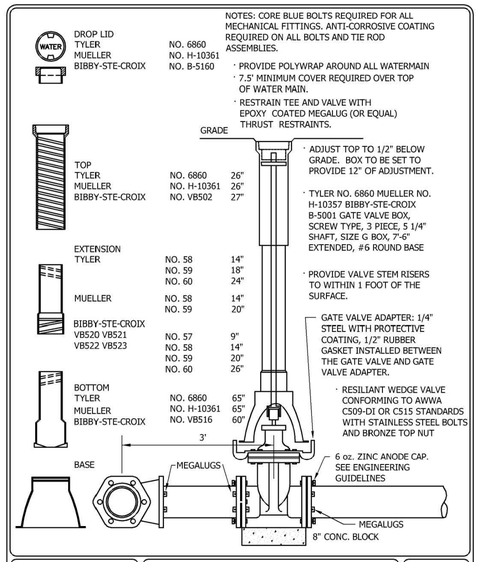

Stantec
733 Marquette Ave Suite 1000
Minneapolis, MN 55402
www.stantec.com

GATE VALVE AND BOX INSTALLATION

CHASKA, MINNESOTA

LAST REVISION: MARCH 2019

PLATE NO. WAT-1

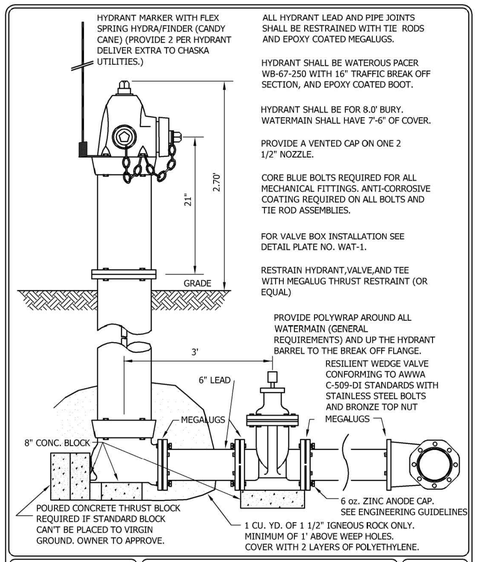

Stantec
733 Marquette Ave Suite 1000
Minneapolis, MN 55402
www.stantec.com

WATEROUS PACER HYDRANT AND VALVE INSTALLATION

CHASKA, MINNESOTA

LAST REVISION: MARCH 2019

PLATE NO. WAT-2

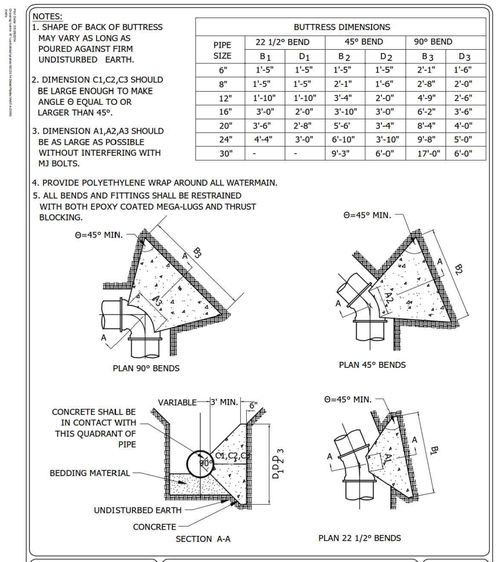

PIPE SIZE	22 1/2° BEND		45° BEND		90° BEND	
	B_1	D_1	B_2	D_2	B_3	D_3
6"	1'-5"	1'-5"	1'-5"	1'-5"	2'-1"	1'-6"
8"	1'-5"	1'-5"	2'-1"	1'-6"	2'-8"	2'-0"
12"	1'-10"	1'-10"	3'-4"	2'-0"	4'-9"	2'-6"
16"	3'-0"	2'-0"	3'-10"	3'-0"	6'-2"	3'-6"
20"	3'-6"	2'-8"	5'-6'	3'-4"	8'-4"	4'-0"
24"	4'-4"	3'-0"	6'-10"	3'-10"	9'-8"	5'-0"
30"	-	-	9'-3"	6'-0"	17'-0"	6'-0"

Stantec
2335 Highway 36 W
St. Paul, MN 55113
www.stantec.com

CONCRETE THRUST BLOCKING

CHASKA, MINNESOTA

LAST REVISION: APRIL 2005

PLATE NO. WAT-4

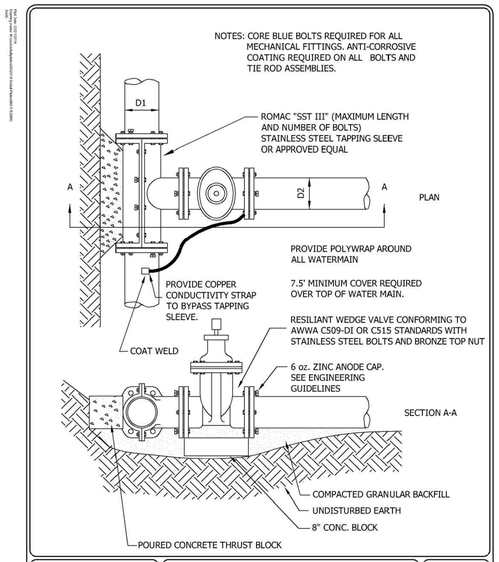

Stantec
733 Marquette Ave Suite 1000
Minneapolis, MN 55402
www.stantec.com

WATER MAIN WET TAP

CHASKA, MINNESOTA

LAST REVISION: MARCH 2019

PLATE NO. WAT-5

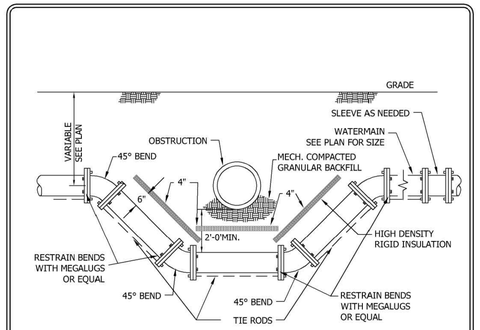

1. USE EPOXY COATED MEGALUG THRUST RESTRAINTS AND COATED TIE RODS ON ALL JOINTS AND FITTINGS. CORE BLUE BOLTS REQUIRED ON ALL MECHANICAL JOINTS.
2. RESTRAIN A MINIMUM OF TWO PIPE JOINTS (40 LF) LEFT AND RIGHT OF THE LOWERING.
3. SEE PLATE NO. GEN-11 TO DETERMINE THE WIDTH OF THE INSULATING BOARD REQUIRED
4. SEE PLATE NO. WAT-4 TO DETERMINE THE REQUIRED CONCRETE THRUST BLOCKING.
5. ANTI CORROSIVE COATING REQUIRED ON ALL BOLT AND RESTRAINT ASSEMBLIES AND WELDS.
6. SACRAFICIAL ZINC ANODE CAPS ON EACH SIDE OF WATER FITTINGS. SEE ENGINEERING GUIDELINES.
7. INSTALL POLYTHELENE FILM WRAP AROUND ALL PIPE INCLUDED IN THE LOWERING.

Stantec
733 Marquette Ave Suite 1000
Minneapolis, MN 55402
www.stantec.com

WATER MAIN LOWERING WITH INSULATION DETAIL

CHASKA, MINNESOTA

LAST REVISION: MARCH 2019

PLATE NO. WAT-6

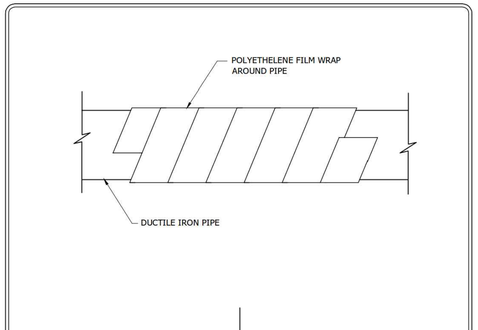

Stantec
2335 Highway 36 W
St. Paul, MN 55113
www.stantec.com

TYPICAL WATER MAIN INSTALLATION

CHASKA, MINNESOTA

LAST REVISION: MARCH 2008

PLATE NO. WAT-7

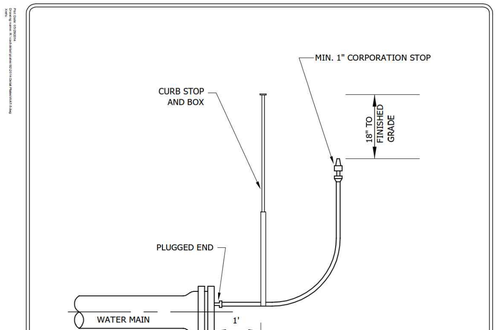

Stantec
2335 Highway 36 W
St. Paul, MN 55113
www.stantec.com

TYPICAL AIR BLEED INSTALLATION

CHASKA, MINNESOTA

LAST REVISION: MARCH 2008

PLATE NO. WAT-8

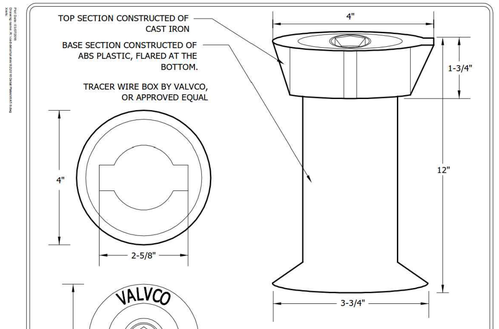

Stantec
2335 Highway 36 W
St. Paul, MN 55113
www.stantec.com

DIP TO C900 WATERMAIN TRANSITION FOR TRACER WIRE

CHASKA, MINNESOTA

LAST REVISION: MAY 2016

PLATE NO. WAT-9

N:\0024429.00\DWG\CIVIL\FINAL\STREET - UTILITY CONSTRUCTION\0024429DTF01.DWG

OAK CREEK

DESIGNED: FDH II
CHECKED: FDH II
DRAWN: KFP/DJW
HORIZONTAL SCALE:
VERTICAL SCALE:

INITIAL ISSUE: 04/29/2022
REVISIONS:
1 05/24/22 CITY COMMENTS
2 . .
3 . .
4 . .
5 . .

PREPARED FOR:

DR HORTON, INC. - MINNESOTA

20860 KENBRIDGE COURT, SUITE 100
LAKEVILLE, MINNESOTA 55044

I HEREBY CERTIFY THAT THIS PLAN WAS PREPARED BY ME OR UNDER MY DIRECT SUPERVISION AND THAT I AM A DULY LICENSED PROFESSIONAL ENGINEER UNDER THE LAWS OF THE STATE OF MINNESOTA

FRANCIS D. HAGEN

DATE: 05/24/22 LICENSE NO. 17716

OAK CREEK

CHASKA, MN

Westwood

Phone (952) 937-5150
Fax (952) 937-5822
Toll Free (888) 937-5150
12701 Whitewater Drive, Suite #300
Minnetonka, MN 55343
westwoodps.com

Westwood Professional Services, Inc.

DETAILS

PROJECT NUMBER: 0024429.00

SHEET NUMBER: 20 OF 28

DATE: 05/24/22

© 2022 Westwood Professional Services, Inc.

Call 48 Hours before digging:
811 or call811.com
Common Ground Alliance

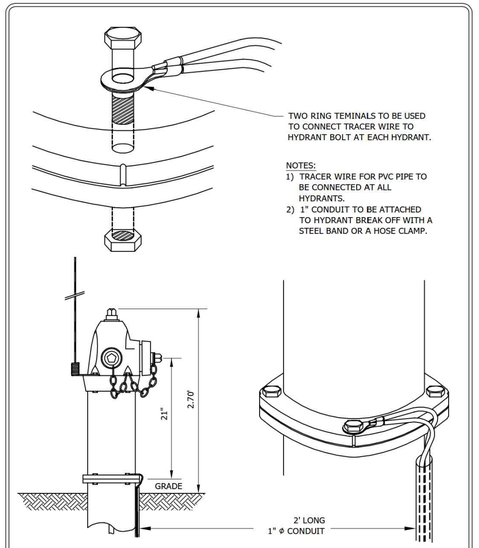

Stantec
2335 Highway 36 W
St. Paul, MN 55113
www.stantec.com

TRACER WIRE FOR PVC WATER MAIN

CHASKA, MN

LAST REVISION: APRIL 2008

PLATE NO. WAT-10

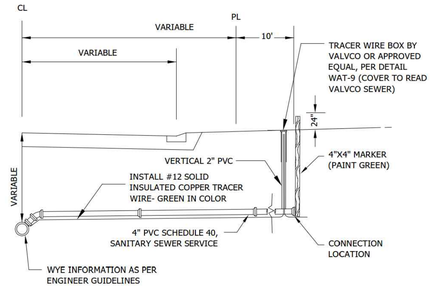

NOTES:
1. SEWER SERVICES, 4" SCHEDULE 40 PVC SEWER PIPE
2. SLOPE - 1/4" PER FOOT MINIMUM.
3. PIPE JOINTS SHALL BE NON GASKETED, SOLVENT WELD TYPE.
4. ALL PIPE SHALL BE BEDDED IN GRANULAR BORROW 3149.2B1 EXCEPT THE LAST TEN FEET WHERE COARSE FILTER AGGREGATE (3149.2H) AGGREGATE WILL BE REQUIRED.
5. BENDS OF 45° OR LESS SHALL BE USED WITHIN THE LAST 5' OF THE SERVICE IF THE DEPTH OF THE SERVICE WOULD EXCEED 10'.
6. NO SERVICE RISERS LESS THAN 3 FEET SHALL BE PERMITTED.
7. A SEPARATE TRACER WIRE WILL EXTEND FROM THE FINISH GRADE AT TRACER WIRE BOX AND FOLLOW SEWER SERVICE TO STRUCTURE FOUNDATION. TRACER WIRE FROM BOX TO FOUNDATION BY OTHERS.
8. FOR DEPTHS GREATER THAN 22', SERVICE PIPE SHALL BE C900 FROM MAIN TO CONNECTION, WITH TRANSITION FITTING FROM C900 TO SCH 40 INSTALLED AT CONNECTION LOCATION.

Stantec
2335 Highway 36 W
St. Paul, MN 55113
www.stantec.com

SEWER SERVICE CONNECTION

CHASKA, MINNESOTA

LAST REVISION: APRIL 2016

PLATE NO. SER-1

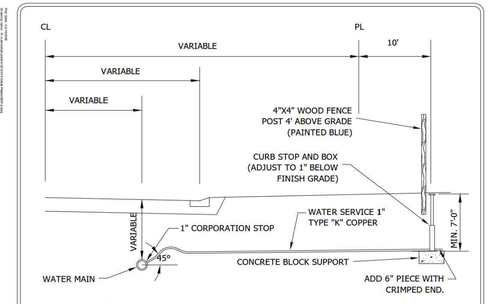

PVC WATER MAIN
STAINLESS STEEL SERVICE SADDLE
SMITH-BLAIR 372 OR APPROVED EQUAL

NOTE: FOR SERVICES LARGER THAN 1" A TAPPING SLEEVE IS REQUIRED. ROCKWELL TYPE 230, FULL CIRCLE, WITH TAP THREADED FOR APPROPRIATE SIZE COPPER CORPORATION STOP. (OR EQUAL)

CORPORATION STOP	CURB STOP	CURB BOX
MUELLER B-25000-N	MUELLER B-25154-N	MUELLER H-10300-N OR H-10302-N
FORD FB-600-4-NL OR-6-NL	FORD B22-444M-NL OR-666M-NL	FORD EM2-75-56R-NL OR EM2-75-57R-NL
A.Y. MCDONALD 74701-B	A.Y. MCDONALD 76104	A.Y. MCDONALD 75615 OR 75614

NOTES:
1. CURB BOX SHALL HAVE A STATIONARY ROD
2. CURB BOX SHALL EXTEND FROM 78" TO 90".
3. ALL PIPE SHALL BE BEDDED IN GRANULAR BORROW 3149.2B1 EXCEPT THE LAST TEN FEET WHERE COARSE FILTER AGGREGATE (3149.2H) WILL BE REQUIRED.
4. IF CURB STOP IS IN DRIVEWAY, CONTRACTOR MUST INSTALL A FORD A-1 CASTING, MARKED WITH "WATER" ON LID.
5. CURB BOX LID SHALL BE MUELLER #89375 OR EQUAL.
6. ALL BRASS FITTINGS SHALL BE "NO LEAD BRASS"

Stantec
2335 Highway 36 W
St. Paul, MN 55113
www.stantec.com

WATER SERVICE CONNECTION
COPPER PIPE
CHASKA, MINNESOTA

LAST REVISION: MARCH 2016

PLATE NO. SER-2

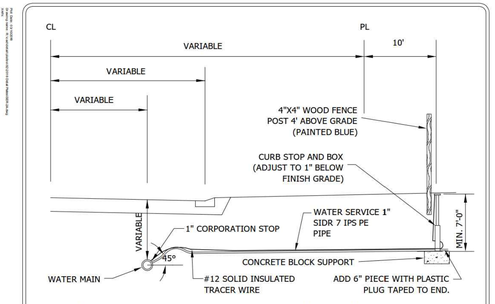

PVC WATER MAIN
STAINLESS STEEL SERVICE SADDLE
SMITH-BLAIR 372 OR APPROVED EQUAL

NOTE: FOR SERVICES LARGER THAN 1" A TAPPING SLEEVE IS REQUIRED. ROCKWELL TYPE 230, FULL CIRCLE, WITH TAP THREADED FOR APPROPRIATE SIZE COPPER CORPORATION STOP. (OR EQUAL)

CORPORATION STOP	CURB STOP	CURB BOX
MUELLER B25009N	MUELLER B25222N	MUELLER H-10300-N OR H-10302-N
FORD FB1001-4Q	FORD B66444MQ	FORD EM2-75-56R-NL OR EM2-75-57R-NL
A.Y. MCDONALD 74704B	A.Y. MCDONALD 76104	A.Y. MCDONALD 75615 OR 75614

NOTES:
1. CURB BOX SHALL HAVE A STATIONARY ROD.
2. CURB BOX SHALL EXTEND FROM 78" TO 90".
3. ALL PIPE SHALL BE BEDDED IN GRANULAR BORROW 3149.2B1 EXCEPT THE LAST TEN FEET WHERE COARSE FILTER AGGREGATE (3149.2H) WILL BE REQUIRED.
4. IF CURB STOP IS IN DRIVEWAY, CONTRACTOR MUST INSTALL A FORD A-1 CASTING, MARKED WITH "WATER" ON LID.
5. CURB BOX LID SHALL BE MUELLER #89375 "TW" OR EQUAL.
6. ALL BRASS FITTINGS SHALL BE "NO LEAD BRASS".
7. PIPE INSERT STIFFENERS REQUIRED FOR FITTING CONNECTIONS.
8. HDPE SERVICE PIPE SHALL BE MANUFACTURED BY ENDOPURE OR BLUE ULTRA PIPE.

Stantec
2335 Highway 36 W
St. Paul, MN 55113
www.stantec.com

WATER SERVICE CONNECTION
HDPE PIPE
CHASKA, MINNESOTA

LAST REVISION: MARCH 2016

PLATE NO. SER-2A

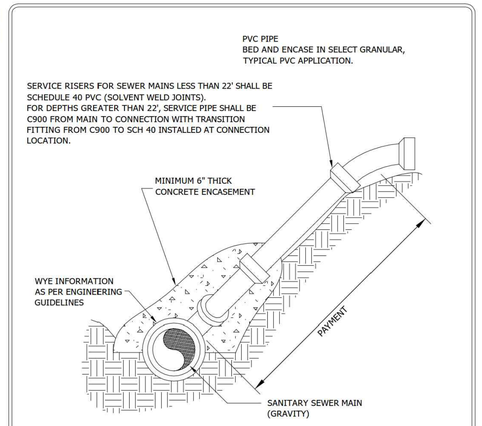

Stantec
2335 Highway 36 W
St. Paul, MN 55113
www.stantec.com

SERVICE RISER

CHASKA, MINNESOTA

LAST REVISION: MARCH 2016

PLATE NO. SER-3

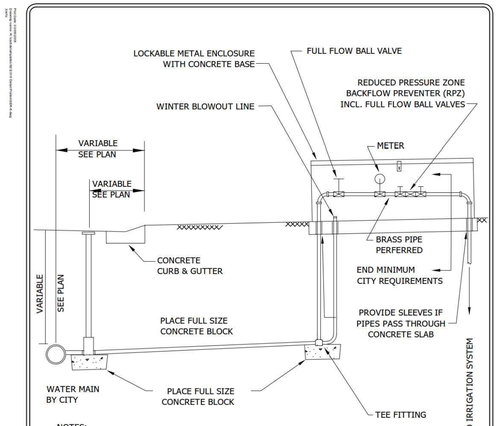

NOTES:
1. CITY WATER SERVICE & PLUMBING PERMITS REQUIRED FOR WORK BY PRIVATE CONTRACTORS.
2. ANNUAL TESTING OF RPZ REQUIRED
3. REQUIRED EQUIPMENT MUST BE ENCLOSED AND SUPPORTED.
4. ENCLOSURE MUST BE APPROVED BY CITY WATER DEPT. ENCLOSURE MUST BE LOCKED WITH A HEAVY DUTY PADLOCK. (SUPPLIED BY CITY)
5. SLEEVES FOR PIPES IN CONCRETE SLABS SHALL BE 4" DIAMETER PVC OR SIMILAR.
6. IF A 1-1/2" IRRIGATION SERVICE IS USED THEN THE CURBSTOP MUST BE LOCATED IN THE GREEN AREA.

Stantec
2335 Highway 36 W
St. Paul, MN 55113
www.stantec.com

IRRIGATION SERVICE
BY PRIVATE CONTRACTOR

CHASKA, MINNESOTA

LAST REVISION: MARCH 2018

PLATE NO. SER-6

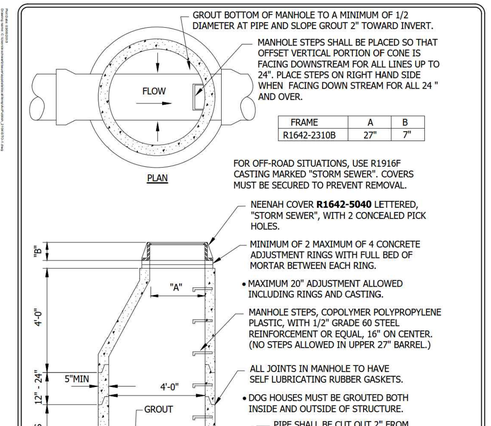

FRAME	A	B
R1642-2310B	27"	7"

Stantec
2335 Highway 36 W
St. Paul, MN 55113
www.stantec.com

STORM SEWER MANHOLE

CHASKA, MINNESOTA

LAST REVISION: MARCH 2018

PLATE NO. STO-1

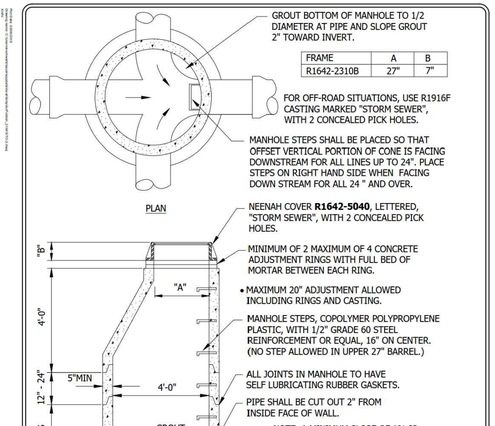

FRAME	A	B
R1642-2310B	27"	7"

Stantec
2335 Highway 36 W
St. Paul, MN 55113
www.stantec.com

STORM SEWER JUNCTION MANHOLE

CHASKA, MINNESOTA

LAST REVISION: MARCH 2018

PLATE NO. STO-2

N:\0024429.00\DWG\CIVIL\FINALSTREET - UTILITY CONSTRUCTION\0024429DTF01.DWG

OAK CREEK

DESIGNED: FDH II
CHECKED: FDH II
DRAWN: KFP/DJW
HORIZONTAL SCALE:
VERTICAL SCALE:

INITIAL ISSUE: 04/29/2022
REVISIONS:
1 05/24/22 CITY COMMENTS
2 . .
3 . .
4 . .
5 . .

PREPARED FOR:

DR HORTON, INC. - MINNESOTA

20860 KENBRIDGE COURT, SUITE 100
LAKEVILLE, MINNESOTA 55044

I HEREBY CERTIFY THAT THIS PLAN WAS PREPARED BY ME OR UNDER MY DIRECT SUPERVISION AND THAT I AM A DULY LICENSED PROFESSIONAL ENGINEER UNDER THE LAWS OF THE STATE OF MINNESOTA

FRANCIS D. HAGEN

DATE: 05/24/22 LICENSE NO. 17716

OAK CREEK

CHASKA, MN

Westwood
Phone (952) 937-5150 12701 Whitewater Drive, Suite #300
Fax (952) 937-5822 Minnetonka, MN 55343
Toll Free (888) 937-5150 westwoodps.com
Westwood Professional Services, Inc.

DETAILS

PROJECT NUMBER: 0024429.00

SHEET NUMBER: 21 OF 28

DATE: 05/24/22

© 2022 Westwood Professional Services, Inc.

Call 48 Hours before digging:
811 or call811.com
Common Ground Alliance

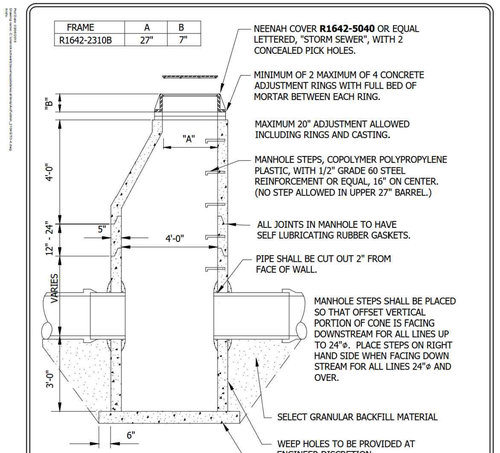

SECTION

Stantec
2335 Highway 36 W
St. Paul, MN 55113
www.stantec.com

PERFORATED SUMP MANHOLE

CHASKA, MINNESOTA

LAST REVISION: MARCH 2018

PLATE NO. STO-4

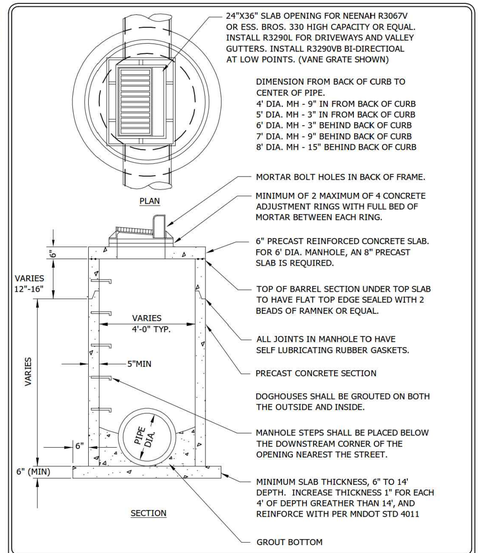

SECTION

Stantec
2335 Highway 36 W
St. Paul, MN 55113
www.stantec.com

TYPE II CATCHBASIN MANHOLE

CHASKA, MINNESOTA

LAST REVISION: MARCH 2018

PLATE NO. STO-5

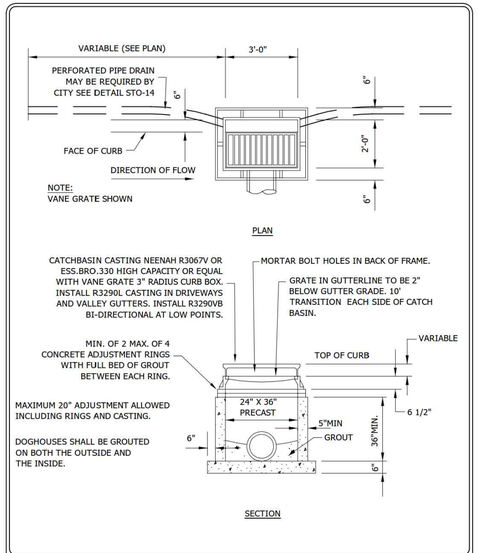

SECTION

Stantec
2335 Highway 36 W
St. Paul, MN 55113
www.stantec.com

TYPE II CATCHBASIN

CHASKA, MINNESOTA

LAST REVISION: MARCH 2018

PLATE NO. STO-6

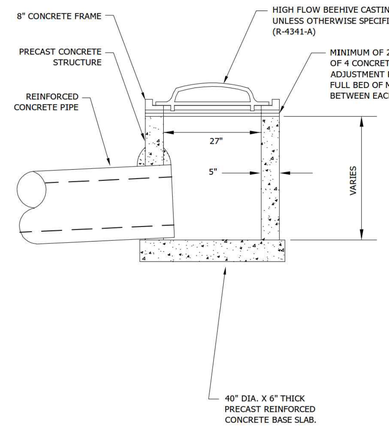

Stantec
2335 Highway 36 W
St. Paul, MN 55113
www.stantec.com

PRECAST 27" SHALLOW DEPTH BEEHIVE

CHASKA, MINNESOTA

LAST REVISION: MARCH 2018

PLATE NO. STO-9

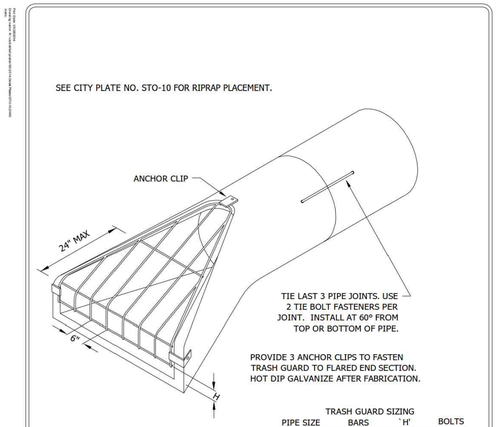

ISOMETRIC

TRASH GUARD SIZING

PIPE SIZE	BARS	`H'	BOLTS
12"	3/4"Ø	2 1/2"	5/8"
15"	3/4"Ø	3"	5/8"
18"	3/4"Ø	4"	5/8"
21"-24"	1"Ø	4"	3/4"
27"-36"	1"Ø	5"	3/4"
42"	1"Ø	6"	3/4"
48"-54"	1 1/4"Ø	6"	1"
60"-72"	1 1/4"Ø	7"	1"
78"-90"	1 1/4"Ø	8"	1"

Stantec
2335 Highway 36 W
St. Paul, MN 55113
www.stantec.com

FLARED END SECTION AND TRASH GUARD

CHASKA, MINNESOTA

LAST REVISION: FEB. 1995

PLATE NO. STO-10

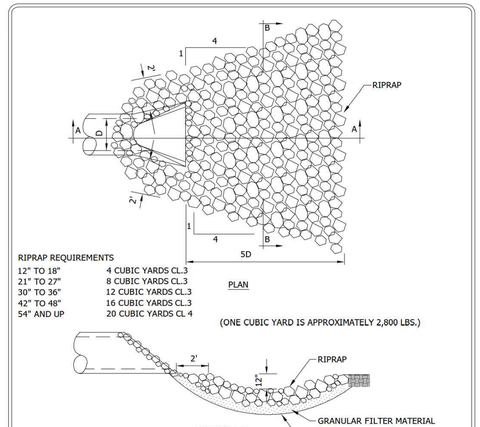

Stantec
2335 Highway 36 W
St. Paul, MN 55113
www.stantec.com

RIPRAP AT OUTLETS

CHASKA, MINNESOTA

LAST REVISION: APRIL 2004

PLATE NO. STO-11

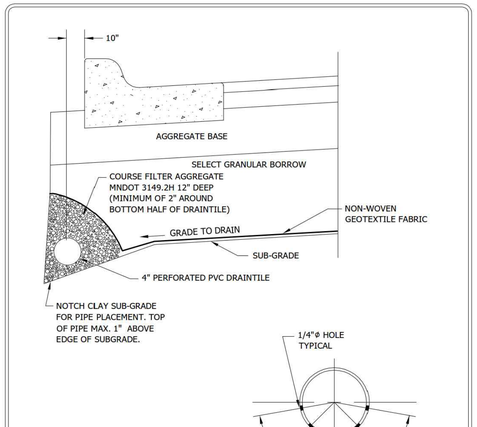

Stantec
2335 Highway 36 W
St. Paul, MN 55113
www.stantec.com

PERFORATED PVC DRAINTILE PIPE BELOW CONCRETE CURB

CHASKA, MINNESOTA

LAST REVISION: NOV. 2016

PLATE NO. STO-12

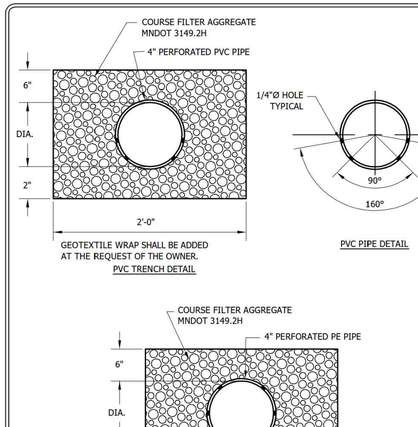

Stantec
2335 Highway 36 W
St. Paul, MN 55113
www.stantec.com

PERFORATED PIPE TRENCH DETAIL

CHASKA, MINNESOTA

LAST REVISION: NOV. 2014

PLATE NO. STO-13

N:\0024429.00\DWG\CIVIL\FINALSTREET - UTILITY CONSTRUCTION\0024429DTF01.DWG

OAK CREEK

DESIGNED: FDH II
CHECKED: FDH II
DRAWN: KFP/DJW
HORIZONTAL SCALE:
VERTICAL SCALE:

INITIAL ISSUE: 04/29/2022
REVISIONS:
1 05/24/22 CITY COMMENTS
2 . .
3 . .
4 . .
5 . .

PREPARED FOR:

DR HORTON, INC. - MINNESOTA

20860 KENBRIDGE COURT, SUITE 100
LAKEVILLE, MINNESOTA 55044

I HEREBY CERTIFY THAT THIS PLAN WAS PREPARED BY ME OR UNDER MY DIRECT SUPERVISION AND THAT I AM A DULY LICENSED PROFESSIONAL ENGINEER UNDER THE LAWS OF THE STATE OF MINNESOTA.

FRANCIS D. HAGEN

DATE: 05/24/22 LICENSE NO. 17716

OAK CREEK

CHASKA, MN

Westwood
Phone (952) 937-5150
Fax (952) 937-5822
Toll Free (888) 937-5150
12701 Whitewater Drive, Suite #300
Minnetonka, MN 55343
westwoodps.com
Westwood Professional Services, Inc.

DETAILS

PROJECT NUMBER: 0024429.00

SHEET NUMBER: 22 OF 28

DATE: 05/24/22

© 2022 Westwood Professional Services, Inc.

Call 48 Hours before digging:
811 or call811.com
Common Ground Alliance

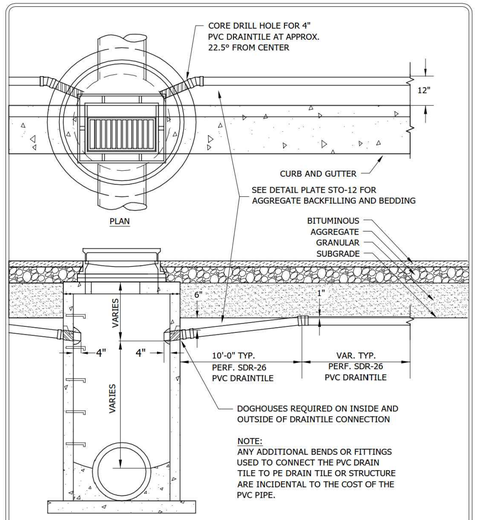

Stantec
2335 Highway 36 W
St. Paul, MN 55113
www.stantec.com

DRAINTILE INSTALLATION INTO CATCHBASIN MANHOLE

CHASKA, MINNESOTA

LAST REVISION: APRIL 2016

PLATE NO. STO-14

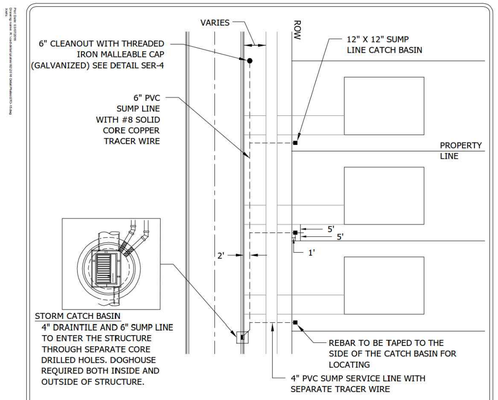

NOTES:
1. 6" PVC SUMP LINE TO BE INSTALLED 2' BELOW GRADE AND TO BE CORE DRILLED INTO NEAREST DOWNSTREAM CATCH BASIN.
2. EXTEND 4" PVC SUMP SERVICE FROM MAIN TO RIGHT OF WAY.
3. ALTERNATE CONFIGURATIONS ONLY WITH THE APPROVAL OF OWNER.
4. SEE ENGINEERING GUIDELINES OR SPECIFICATIONS FOR ADDITIONAL INFORMATION.
5. MAXIMUM SUMP LINE LENGTH 300'. IF LONGER SUMP LINE IS NECESSARY, INTERMEDIATE CLEANOUTS WILL BE REQUIRED EVERY 200'.
6. INSTALL 4" X 4" POST ADJACENT TO EACH SUMP CATCH BASIN FOR PROTECTION DURING CONSTRUCTION.
7. CLEAN OUT TO BE PLACED ON PROPERTY LINE AT END OF LAST SERVICE LINE. IF SERVICE FALLS IN DRIVEWAY THE MAINLINE WILL BE EXTENDED BEYOND DRIVEWAY/ALLEY TO ENSURE THE CLEANOUT IS IN GREEN SPACE.
8. A SEPARATE TRACER WIRE WILL EXTEND FROM THE FINISHED GRADE CLEANOUT LOCATION WITH TRACER WIRE BOX AND FOLLOW THE SUMP LINE TO THE STRUCTURE LOCATION.

Stantec
2335 Highway 36 W
St. Paul, MN 55113
www.stantec.com

PVC SUMP LINE BEHIND CURB

CHASKA, MINNESOTA

LAST REVISION: MAY 2016

PLATE NO. STO-15

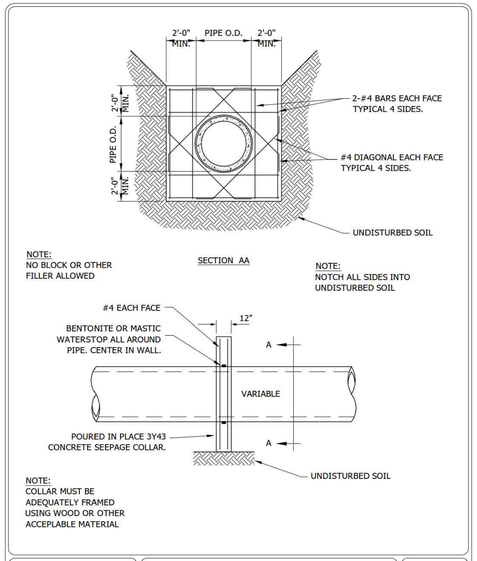

NOTE:
NO BLOCK OR OTHER FILLER ALLOWED

NOTE:
NOTCH ALL SIDES INTO UNDISTURBED SOIL

NOTE:
COLLAR MUST BE ADEQUATELY FRAMED USING WOOD OR OTHER ACCEPLABLE MATERIAL

Stantec
2335 Highway 36 W
St. Paul, MN 55113
www.stantec.com

SEEPAGE COLLAR

CHASKA, MINNESOTA

LAST REVISION: MARCH 2001

PLATE NO. STO-16

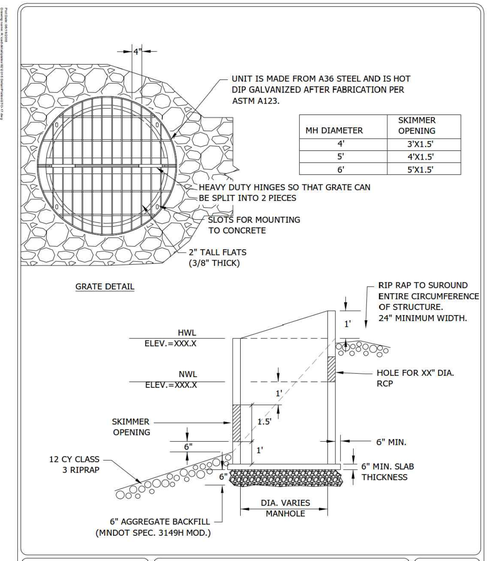

MH DIAMETER	SKIMMER OPENING
4'	3'X1.5'
5'	4'X1.5'
6'	5'X1.5'

Stantec
2335 Highway 36 W
St. Paul, MN 55113
www.stantec.com

STANDARD SKIMMER STRUCTURE

CHASKA, MINNESOTA

LAST REVISION: JUNE 2018

PLATE NO. STO-17

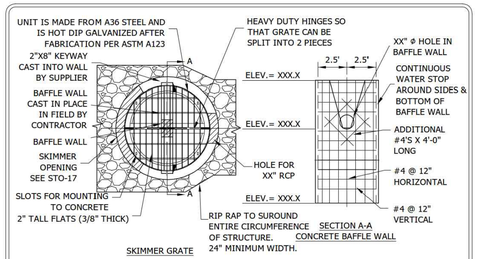

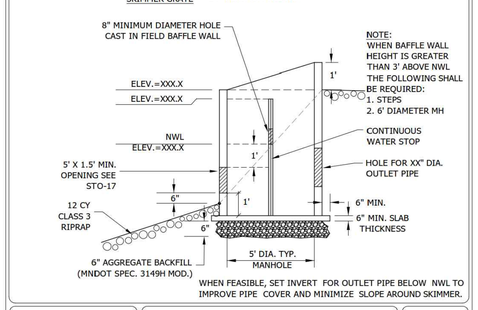

Stantec
2335 Highway 36 W
St. Paul, MN 55113
www.stantec.com

SKIMMER STRUCTURE WITH CAST IN FIELD CONCRETE BAFFLE WALL

CHASKA, MINNESOTA

LAST REVISION: MARCH 2018

PLATE NO. STO-18

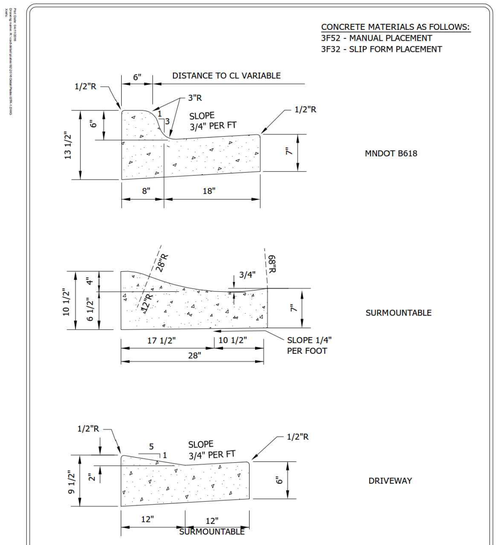

Stantec
2335 Highway 36 W
St. Paul, MN 55113
www.stantec.com

CURB AND GUTTER

CHASKA, MINNESOTA

LAST REVISION: APRIL 2016

PLATE NO. STR-1

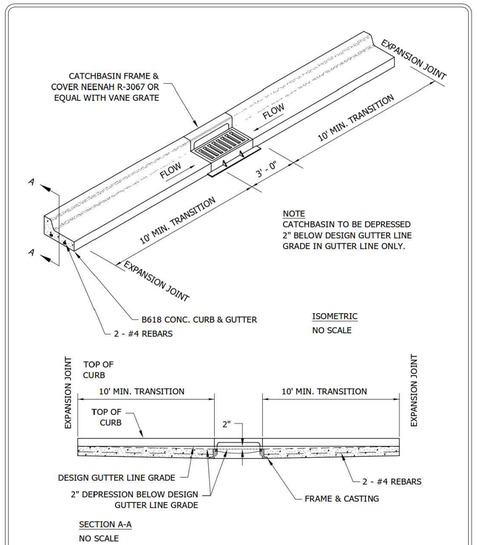

Stantec
2335 Highway 36 W
St. Paul, MN 55113
www.stantec.com

B618 CURB & GUTTER CONSTRUCTION AT CATCHBASIN

CHASKA, MINNESOTA

LAST REVISION: MARCH 2008

PLATE NO. STR-4

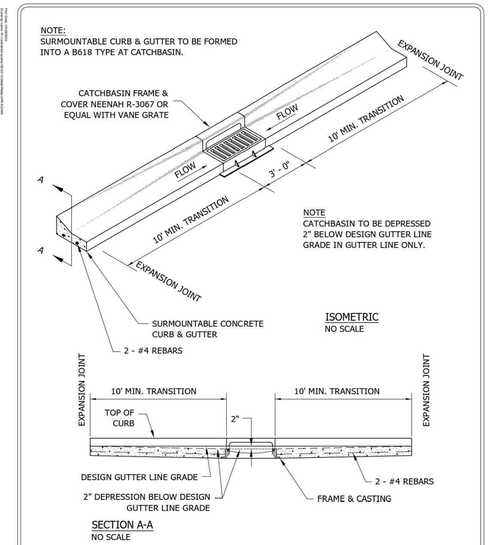

Stantec
2335 Highway 36 W
St. Paul, MN 55113
www.stantec.com

SURMOUNTABLE CURB & GUTTER CONSTRUCTION AT CATCHBASIN

CHASKA, MINNESOTA

LAST REVISION: MARCH 2008

PLATE NO. STR-5

N:\0024429.00\DWG\CIVIL\FINALSTREET - UTILITY CONSTRUCTION\0024429DTF01.DWG

OAK CREEK

DESIGNED: FDH II
CHECKED: FDH II
DRAWN: KFP/DJW
HORIZONTAL SCALE:
VERTICAL SCALE:

INITIAL ISSUE: 04/29/2022
REVISIONS:
1 05/24/22 CITY COMMENTS
2 . .
3 . .
4 . .
5 . .

PREPARED FOR:

DR HORTON, INC. - MINNESOTA

20860 KENBRIDGE COURT, SUITE 100
LAKEVILLE, MINNESOTA 55044

I HEREBY CERTIFY THAT THIS PLAN WAS PREPARED BY ME OR UNDER MY DIRECT SUPERVISION AND THAT I AM A DULY LICENSED PROFESSIONAL ENGINEER UNDER THE LAWS OF THE STATE OF MINNESOTA

FRANCIS D. HAGEN

DATE: 05/24/22 LICENSE NO. 17716

OAK CREEK

CHASKA, MN

Westwood

Phone (952) 937-5150 12701 Whitewater Drive, Suite #300
Fax (952) 937-5822 Minnetonka, MN 55343
Toll Free (888) 937-5150 westwoodps.com

Westwood Professional Services, Inc.

DETAILS

PROJECT NUMBER: 0024429.00

SHEET NUMBER: 23 OF 28

DATE: 05/24/22

© 2022 Westwood Professional Services, Inc.

Call 48 Hours before digging:
811 or call811.com
Common Ground Alliance

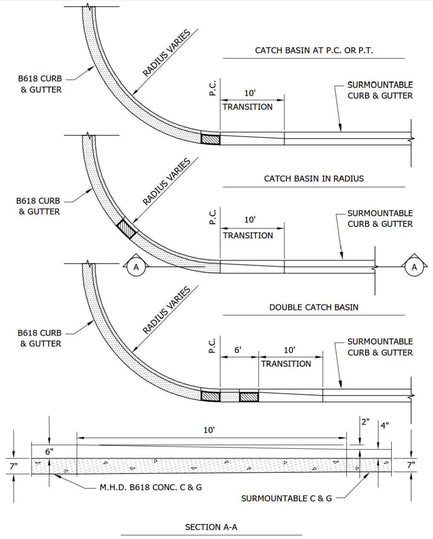

SECTION A-A

Stantec
2335 Highway 36 W
St. Paul, MN 55113
www.stantec.com

CONCRETE CURB & GUTTER TRANSITION

CHASKA, MINNESOTA

LAST REVISION: OCT. 1989

PLATE NO. STR-10

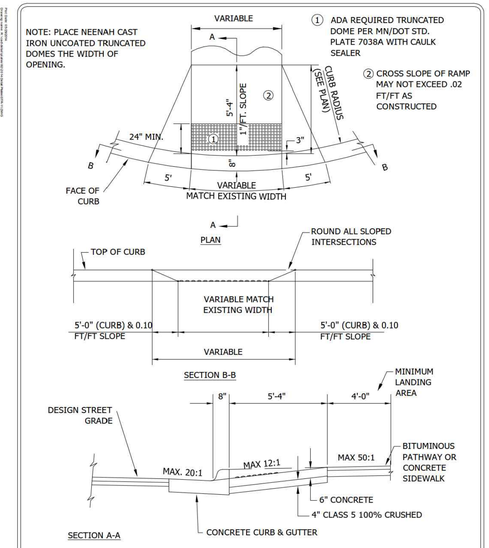

SECTION A-A

Stantec
2335 Highway 36 W
St. Paul, MN 55113
www.stantec.com

PEDESTRIAN CURB RAMP FOR PATHWAY/SIDEWALK

CHASKA, MINNESOTA

LAST REVISION: APRIL 2011

PLATE NO. STR-11

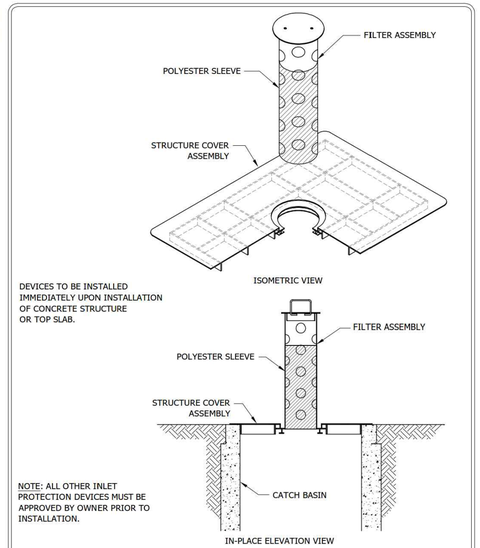

ISOMETRIC VIEW

DEVICES TO BE INSTALLED IMMEDIATELY UPON INSTALLATION OF CONCRETE STRUCTURE OR TOP SLAB.

IN-PLACE ELEVATION VIEW

NOTE: ALL OTHER INLET PROTECTION DEVICES MUST BE APPROVED BY OWNER PRIOR TO INSTALLATION.

Stantec
2335 Highway 36 W
St. Paul, MN 55113
www.stantec.com

INLET PROTECTION FOR CATCH BASIN BEFORE CURB CONSTRUCTION

CHASKA, MINNESOTA

LAST REVISION: APRIL 2008

PLATE NO. ERO-4A

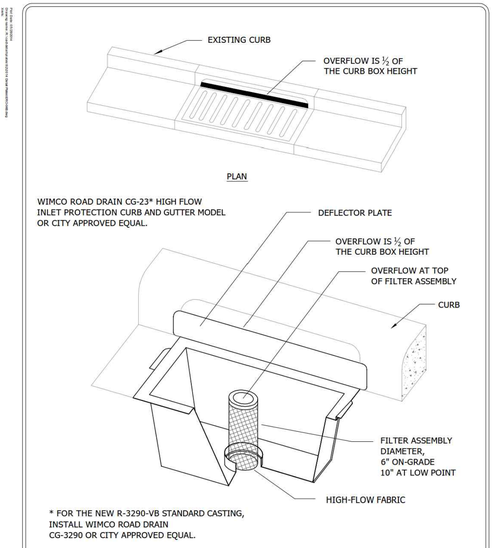

PLAN

WIMCO ROAD DRAIN CG-23* HIGH FLOW INLET PROTECTION CURB AND GUTTER MODEL OR CITY APPROVED EQUAL.

* FOR THE NEW R-3290-VB STANDARD CASTING, INSTALL WIMCO ROAD DRAIN CG-3290 OR CITY APPROVED EQUAL.

Stantec
2335 Highway 36 W
St. Paul, MN 55113
www.stantec.com

INLET PROTECTION - CATCH BASIN INSERT AFTER CURB CONSTRUCTION

CHASKA, MINNESOTA

LAST REVISION: APRIL 2008

PLATE NO. ERO-4B

DEVICES TO BE INSTALLED IMMEDIATELY UPON INSTALLATION OF CONCRETE STRUCTURE CONE OR TOP SLAB.

DEVICES SHOWN ARE AS MANUFACTURED BY WIMCO. MODEL NO. OF UNIT SHOWN: RD 27.

OTHER APPROVED INLET PROTECTION DEVICES FOR BEEHIVE CASTINGS ARE:

- ROYAL ENTERPRISES - MODEL NO 27 INFRASAFE SEDIMENT CONTROL BARRIER - DG.
- PRE MANUFACTURED UNIT BY CIRCLE "H" ENTERPRISES.

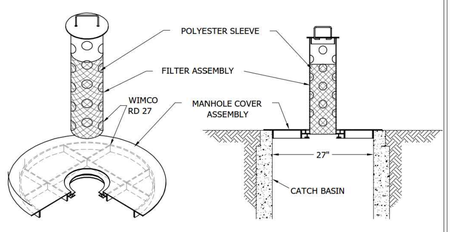

ISOMETRIC VIEW

IN-PLACE ELEVATION VIEW

Stantec
2335 Highway 36 W
St. Paul, MN 55113
www.stantec.com

INLET PROTECTION BEEHIVE CASTING

CHASKA, MINNESOTA

LAST REVISION: APRIL 2008

PLATE NO. ERO-4C

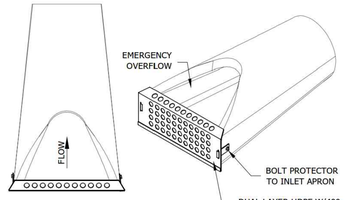

- FILTER FABRIC MAY BE REPLACED AS REQUIRED BY REMOVING BOLTS OR RIVETS CONNECTING HDPE LAYERS AND BOLTING OR RIVETING BACK TOGETHER.
- DEVICES SHOWN ARE AS MANUFACTURED BY ROYAL ENVIRONMENTAL SYSTEMS. INFRASAFE - CULVERT INLET PROTECTOR.

Stantec
2335 Highway 36 W
St. Paul, MN 55113
www.stantec.com

FLARED END EROSION CONTROL

CHASKA, MINNESOTA

LAST REVISION: FEB 2005

PLATE NO. ERO-6

N:\0024429.00\DWG\CIVIL\FINALSTREET - UTILITY CONSTRUCTION\0024429DTF01.DWG

OAK CREEK

DESIGNED: FDH II
CHECKED: FDH II
DRAWN: KFP/DJW
HORIZONTAL SCALE:
VERTICAL SCALE:

INITIAL ISSUE: 04/29/2022
REVISIONS:
1 05/24/22 CITY COMMENTS
2 . .
3 . .
4 . .
5 . .

PREPARED FOR:

DR HORTON, INC. - MINNESOTA

20860 KENBRIDGE COURT, SUITE 100
LAKEVILLE, MINNESOTA 55044

I HEREBY CERTIFY THAT THIS PLAN WAS PREPARED BY ME OR UNDER MY DIRECT SUPERVISION AND THAT I AM A DULY LICENSED PROFESSIONAL ENGINEER UNDER THE LAWS OF THE STATE OF MINNESOTA

FRANCIS D. HAGEN

DATE: 05/24/22 LICENSE NO. 17716

OAK CREEK

CHASKA, MN

Westwood

Phone (952) 937-5150 12701 Whitewater Drive, Suite #300
Fax (952) 937-5822 Minnetonka, MN 55343
Toll Free (888) 937-5150 westwoodps.com

Westwood Professional Services, Inc.

DETAILS

PROJECT NUMBER: 0024429.00

SHEET NUMBER: 24 OF 28

DATE: 05/24/22

© 2022 Westwood Professional Services, Inc.

Call 48 Hours before digging:
811 or call811.com
Common Ground Alliance

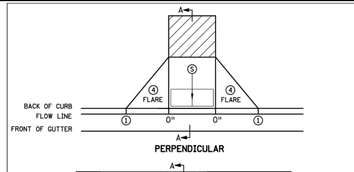

PERPENDICULAR

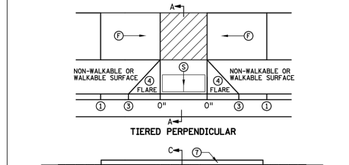

TIERED PERPENDICULAR

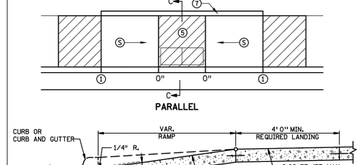

PARALLEL

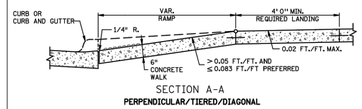

SECTION A-A
PERPENDICULAR/TIERED/DIAGONAL

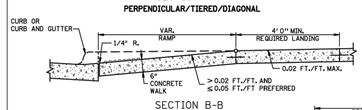

SECTION B-B
FAN

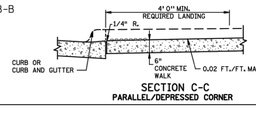

SECTION C-C
PARALLEL/DEPRESSED CORNER

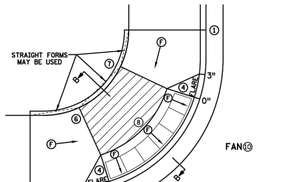

FAN⑩

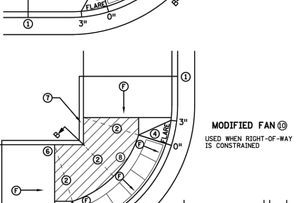

MODIFIED FAN⑩
USED WHEN RIGHT-OF-WAY IS CONSTRAINED

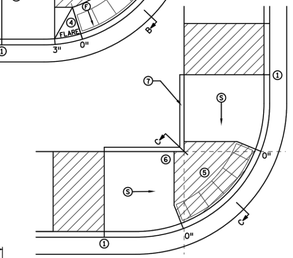

DEPRESSED CORNER

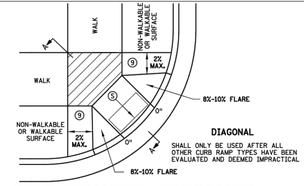

DIAGONAL
SHALL ONLY BE USED AFTER ALL OTHER CURB RAMP TYPES HAVE BEEN EVALUATED AND DEEMED IMPRACTICAL

NOTES:
LANDINGS SHALL BE LOCATED ANYWHERE THE PEDESTRIAN ACCESS ROUTE (PAR) CHANGES DIRECTION, AT THE TOP OF RAMPS THAT HAVE RUNNING SLOPES GREATER THAN 5.0%, AND AT THE APPROACHING WALK IS INVERSE GRADE.

INITIAL CURB RAMP LANDINGS SHALL BE CONSTRUCTED WITHIN 15' FROM THE BACK OF CURB, WITH 6' FROM THE BACK OF CURB BEING THE PREFERRED DISTANCE, ONLY APPLICABLE WHEN THE INITIAL RAMP RUNNING SLOPE IS OVER 5.0%.

SECONDARY CURB RAMP LANDINGS ARE REQUIRED FOR EVERY 30" OF VERTICAL RISE WHEN THE LONGITUDINAL RUNNING SLOPE IS GREATER THAN 5.0%.

CONTRACTION JOINTS SHALL BE CONSTRUCTED ALONG ALL GRADE BREAKS WITHIN THE PAR, 1/4" DEEP VISUAL JOINTS SHALL BE USED AT THE TOPS OF CONCRETE FLARES ADJACENT TO WALKABLE SURFACES. ALL GRADE BREAKS WITHIN THE PAR SHALL BE PERPENDICULAR TO THE PATH OF TRAVEL, THUS BOTH SIDES OF A SLOPED WALKING SURFACE MUST BE EQUAL LENGTH, EXCEPT AS STATED IN ⑨ BELOW.

TO ENSURE INITIAL RAMPS AND INITIAL LANDINGS ARE PROPERLY CONSTRUCTED, LANDINGS SHALL BE CAST SEPARATELY, FOLLOW SIDEWALK REINFORCEMENT DETAILS ON SHEET 6 AND THE ADA SPECIAL PROVISIONS - PROSECUTION OF WORK (ADA).

TOP OF CURB SHALL MATCH PROPOSED ADJACENT WALK GRADE.

WHEN THE BOULEVARD IS 4' WIDE OR LESS, THE TOP OF CURB TAPER SHALL MATCH THE RAMP SLOPES TO REDUCE NEGATIVE BOULEVARD SLOPES FROM THE TOP BACK OF CURB TO THE PAR.

ALL RAMP TYPES SHOULD HAVE A MINIMUM 3'-LONG RAMP LENGTH.

4" MINIMUM WIDTH OF DETECTABLE WARNING IS REQUIRED FOR ALL RAMPS. DETECTABLE WARNINGS SHALL CONTINUOUSLY EXTEND FOR A MIN. OF 24" IN THE PATH OF TRAVEL. DETECTABLE WARNING TO COVER ENTIRE WIDTH OF SHARED-USE PATH AND THE ENTIRE PAR WIDTH OF THE WALK. DETECTABLE WARNING SHOULD BE 6" LESS THAN THE PAR/PATH WIDTH. ARC LENGTH OF RADIAL DETECTABLE WARNINGS SHOULD NOT BE GREATER THAN 20 FEET.

RECTANGULAR DETECTABLE WARNINGS SHALL BE SETBACK 3" FROM THE BACK OF CURB. RADIAL DETECTABLE WARNINGS SHALL BE SETBACK 3" MINIMUM TO 6" MAXIMUM FROM THE BACK OF CURB.

① MATCH FULL HEIGHT CURB.
② 4" MINIMUM DEPTH LANDING REQUIRED ACROSS TOP OF RAMP.
③ 3" HIGH CURB WHEN USING A 3'-LONG RAMP. 4" HIGH CURB WHEN USING A 4'-LONG RAMP.
④ SEE SHEET 4 OF 6, TYPICAL SIDE TREATMENT OPTIONS, FOR DETAILS ON FLARES AND RETURNED CURBS. WHEN INITIAL LANDING IS AT FULL CURB HEIGHT.
⑤ DETECTABLE WARNINGS MAY BE PART OF THE 4' X 4'-MIN. LANDING AREA IF IT IS NOT FEASIBLE TO CONSTRUCT THE LANDING OUTSIDE OF THE DETECTABLE WARNING AREA.
⑥ THE GRADE BREAK SHALL BE PERPENDICULAR TO THE BACK OF WALK. THIS WILL ENSURE THAT THE GRADE BREAK IS PERPENDICULAR TO THE DIRECTION OF TRAVEL. (TYPICAL FOR ALL)
⑦ WHEN ADJACENT TO GRASS, GRADING SHALL ALWAYS BE USED WHEN FEASIBLE. V CURB, IF USED, SHALL BE PLACED OUTSIDE THE SIDEWALK LIMITS WHEN RIGHT OF WAY ALLOWS. WHEN ADJACENT TO PARKING LOTS, CONCRETE OR BITUMINOUS TAPERS SHOULD BE USED OVER V CURB TO REDUCE TRIPPING HAZARDS AND FACILITATE SNOW & ICE REMOVAL.
⑧ A 7' MIN TOP RADIUS GRADE BREAK REQUIRED TO BE CONSTRUCTIBLE.
⑨ PAVE FULL WALK WIDTH.
⑩ 5% SLOPES ON FANS SHALL ONLY BE USED WHEN ALL OTHER FEASIBLE OPTIONS HAVE BEEN EVALUATED AND DEEMED IMPRACTICAL.

LEGEND
THESE LONGITUDINAL SLOPE RANGES SHALL BE THE STARTING POINT, IF SITE CONDITIONS WARRANT, LONGITUDINAL SLOPES UP TO 8.3% OR FLATTER ARE ALLOWED.
(S) INDICATES PEDESTRIAN RAMP - SLOPE SHALL BE BETWEEN 5.0% MINIMUM AND 8.3% MAXIMUM IN THE DIRECTION SHOWN AND THE CROSS SLOPE SHALL NOT EXCEED 2.0%.
(F) INDICATES PEDESTRIAN RAMP - SLOPE SHALL BE GREATER THAN 2.0% AND LESS THAN 5.0% IN THE DIRECTION SHOWN AND CROSS SLOPE SHALL NOT EXCEED 2.0%.
LANDING AREA - 4' X 4' MIN. (5' X 5' MIN. PREFERRED) DIMENSIONS AND MAX 2.0% SLOPE IN ALL DIRECTIONS. LANDING SHALL BE FULL WIDTH OF INCOMING PARS.
X" CURB HEIGHT

REVISION:
APPROVED: JANUARY 23, 2017
OPERATIONS ENGINEER

PEDESTRIAN CURB RAMP DETAILS
APPROVED: 1-23-2017
STATE DESIGN ENGINEER
STANDARD PLAN 5-297.250 | 1 OF 6

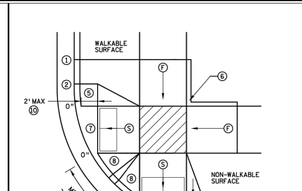

COMBINED DIRECTIONAL ⑨

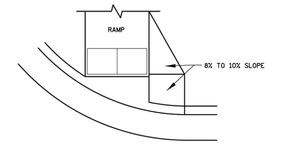

DIRECTIONAL RAMP WALKABLE FLARE

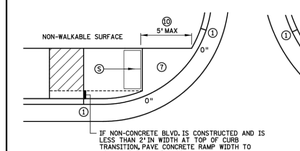

STANDARD ONE-WAY DIRECTIONAL ⑨

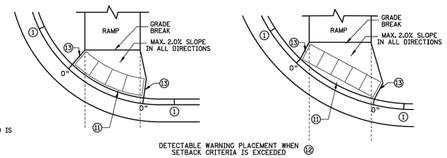

ONE-WAY DIRECTIONAL WITH DETECTABLE WARNING AT BACK OF CURB

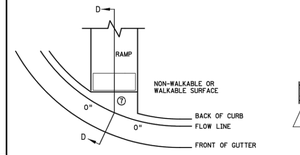

CURB FOR DIRECTIONAL RAMPS ⑭

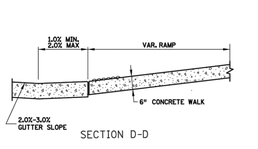

SECTION D-D

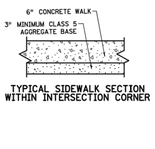

TYPICAL SIDEWALK SECTION WITHIN INTERSECTION CORNER

NOTES:
LANDINGS SHALL BE LOCATED ANYWHERE THE PEDESTRIAN ACCESS ROUTE (PAR) CHANGES DIRECTION, AT THE TOP OF RAMPS THAT HAVE RUNNING SLOPES GREATER THAN 5.0%, AND AT THE APPROACHING WALK IS INVERSE GRADE.

INITIAL CURB RAMP LANDINGS SHALL BE CONSTRUCTED WITHIN 15' FROM THE BACK OF CURB, WITH 6' FROM THE BACK OF CURB BEING THE PREFERRED DISTANCE, ONLY APPLICABLE WHEN THE INITIAL RAMP RUNNING SLOPE IS OVER 5.0%.

SECONDARY CURB RAMP LANDINGS ARE REQUIRED FOR EVERY 30" OF VERTICAL RISE WHEN THE LONGITUDINAL SLOPE IS GREATER THAN 5.0%.

CONTRACTION JOINTS SHALL BE CONSTRUCTED ALONG ALL GRADE BREAKS WITHIN THE PAR, 1/4" DEEP VISUAL JOINTS SHALL BE USED AT THE TOP GRADE BREAK OF CONCRETE FLARES ADJACENT TO WALKABLE SURFACES.

ALL GRADE BREAKS WITHIN THE PAR SHALL BE PERPENDICULAR TO THE PATH OF TRAVEL, THUS BOTH SIDES OF A SLOPED WALKING SURFACE MUST BE EQUAL LENGTH.

TO ENSURE INITIAL RAMPS AND INITIAL LANDINGS ARE PROPERLY CONSTRUCTED, LANDINGS SHALL BE CAST SEPARATELY, FOLLOW SIDEWALK REINFORCEMENT DETAILS ON SHEET 6 AND THE ADA SPECIAL PROVISION (PROSECUTION OF WORK).

TOP OF CURB SHALL MATCH PROPOSED ADJACENT WALK GRADE.

WHEN THE BOULEVARD IS 4' WIDE OR LESS, THE TOP OF CURB TAPER SHALL MATCH THE RAMP SLOPES TO REDUCE NEGATIVE BOULEVARD SLOPES FROM THE TOP BACK OF CURB TO THE PAR.

ALL RAMP TYPES SHOULD HAVE A MINIMUM 3'-LONG RAMP LENGTH.

4" MINIMUM WIDTH OF DETECTABLE WARNING IS REQUIRED FOR ALL RAMPS. DETECTABLE WARNINGS SHALL CONTINUOUSLY EXTEND FOR A MIN. OF 24" IN THE PATH OF TRAVEL. DETECTABLE WARNING TO COVER ENTIRE WIDTH OF SHARED-USE PATH AND THE ENTIRE PAR WIDTH OF THE WALK. DETECTABLE WARNING SHOULD BE 6" LESS THAN THE PAR/PATH WIDTH. ARC LENGTH OF RADIAL DETECTABLE WARNINGS SHOULD NOT BE GREATER THAN 20 FEET.

RADIAL DETECTABLE WARNINGS SHALL BE SETBACK 3" MINIMUM TO 6" MAXIMUM FROM THE BACK OF CURB. SEE NOTES ⑬ & ⑭ FOR INFORMATION REGARDING RECTANGULAR DETECTABLE WARNING PLACEMENT.

① MATCH FULL CURB HEIGHT.
② 3" HIGH CURB WHEN USING A 3'-LONG RAMP
4" HIGH CURB WHEN USING A 4'-LONG RAMP.
③ 3" MINIMUM CURB HEIGHT (5.5" MIN. DISTANCE REQUIRED BETWEEN DOMES)
4" PREFERRED (7" MIN. DISTANCE REQUIRED BETWEEN DOMES).
④ THE "RAMP" IN BETWEEN THE RAMPS SHOULD NOT BE IN THE PATH OF TRAVEL FOR COMBINED DIRECTIONAL RAMPS. IF THIS OCCURS MODIFY THE RAMP LOCATION OR SWITCH RAMP TO A FAN/DEPRESSED CORNER.
⑤ WHEN USING CONCRETE PAVED FLARES ON THE OUTSIDE OF DIRECTIONAL RAMPS, AND ADJACENT TO A WALKABLE SURFACE, DIRECTIONAL RAMP FLARES SHOULD BE USED. SEE THE DETAIL ON THIS SHEET.
⑥ GRADING SHALL ALWAYS BE USED WHEN FEASIBLE. V CURB, IF USED, SHALL BE PLACED OUTSIDE THE SIDEWALK LIMITS WHEN RIGHT OF WAY ALLOWS. WHEN ADJACENT TO PARKING LOTS, CONCRETE OR BITUMINOUS TAPERS SHOULD BE USED OVER V CURB TO REDUCE TRIPPING HAZARDS AND FACILITATE SNOW & ICE REMOVAL.
⑦ MAX. 2.0% SLOPE IN ALL DIRECTIONS IN FRONT OF GRADE BREAK AND DRAIN TO FLOW LINE. SHALL BE CONSTRUCTED INTEGRAL WITH CURB AND GUTTER.
⑧ 8% TO 10% WALKABLE FLARE.
⑨ PLACE DOMES AT THE BACK OF CURB WHEN ALLOWABLE SETBACK CRITERIA IS EXCEEDED.
⑩ FRONT EDGE OF DETECTABLE WARNING SHALL BE SET BACK 2' MAXIMUM WHEN ADJACENT TO WALKABLE SURFACE AND 5' MAXIMUM WHEN ADJACENT TO NON-WALKABLE SURFACE WITH ONE CORNER SET 5' FROM BACK OF CURB. A WALKABLE SURFACE IS DEFINED AS A PAVED SURFACE ADJACENT TO A CURB RAMP WITHOUT RAISED OBSTACLES THAT COULD MISTAKENLY BE TRAVERSED BY A USER WHO IS VISUALLY IMPAIRED.
⑪ RECTANGULAR DETECTABLE WARNINGS MAY BE SETBACK UP TO 9" FROM THE BACK OF CURB WITH CORNERS SET 3" FROM BACK OF CURB. IF 9" SETBACK IS EXCEEDED USE RADIAL DETECTABLE WARNINGS.
⑫ FOR DIRECTIONAL RAMPS WITH THE DETECTABLE WARNINGS PLACED AT THE BACK OF CURB, THE DETECTABLE WARNINGS SHALL SPAN THE ENTIRE WIDTH OF THE WALK/PATH. THIS ENSURES A DETECTABLE EDGE AND HELPS ELIMINATE THE CURB TAPER OBSTRUCTING THE PATH OF PEDESTRIAN TRAVEL.
⑬ THE CONCRETE WALK SHALL BE FORMED AND CONSTRUCTED PERPENDICULAR TO THE BACK OF CURB. MAINTAIN 3" BETWEEN TOP OF DOMES AND EDGE OF CONCRETE.
⑭ TO BE USED FOR ALL DIRECTIONAL RAMPS, EXCEPT WHERE DOMES ARE PLACED ALONG THE BACK OF CURB.

LEGEND
THESE LONGITUDINAL SLOPE RANGES SHALL BE THE STARTING POINT, IF SITE CONDITIONS WARRANT, LONGITUDINAL SLOPES UP TO 8.3% OR FLATTER ARE ALLOWED.
(S) INDICATES PEDESTRIAN RAMP - SLOPE SHALL BE BETWEEN 5.0% MINIMUM AND 8.3% MAXIMUM IN THE DIRECTION SHOWN AND THE CROSS SLOPE SHALL NOT EXCEED 2.0%.
(F) INDICATES PEDESTRIAN RAMP - SLOPE SHALL BE GREATER THAN 2.0% AND LESS THAN 5.0% IN THE DIRECTION SHOWN AND CROSS SLOPE SHALL NOT EXCEED 2.0%.
LANDING AREA - 4' X 4' MIN. (5' X 5' MIN. PREFERRED) DIMENSIONS AND MAX 2.0% SLOPE IN ALL DIRECTIONS. LANDING SHALL BE FULL WIDTH OF INCOMING PARS.
X" CURB HEIGHT

REVISION:
APPROVED: JANUARY 23, 2017
OPERATIONS ENGINEER

PEDESTRIAN CURB RAMP DETAILS
APPROVED: 1-23-2017
STATE DESIGN ENGINEER
STANDARD PLAN 5-297.250 | 2 OF 6

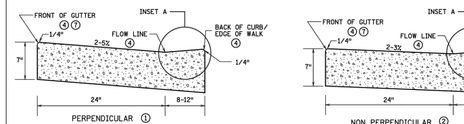

PERPENDICULAR ①

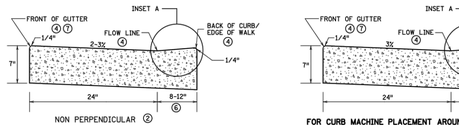

NON PERPENDICULAR ②

PEDESTRIAN ACCESS ROUTE CURB & GUTTER DETAIL

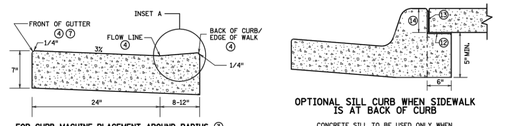

FOR CURB MACHINE PLACEMENT AROUND RADIUS ③
(REGARDLESS OF RAMP TYPE)

OPTIONAL SILL CURB WHEN SIDEWALK IS AT BACK OF CURB
CONCRETE SILL TO BE USED ONLY WHEN SPECIFIED IN THE PLAN.

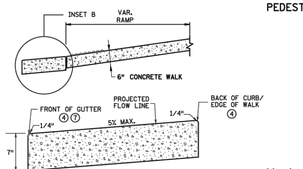

INSET B
OUTFLOW GUTTER ⑥

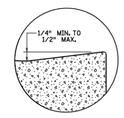

INSET A

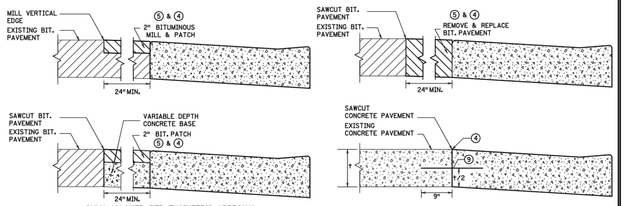

ONLY ALLOWED PER ENGINEER'S APPROVAL

PAVEMENT TREATMENT OPTIONS IN FRONT OF CURB & GUTTER
FOR USE ON CURB RAMP RETROFITS

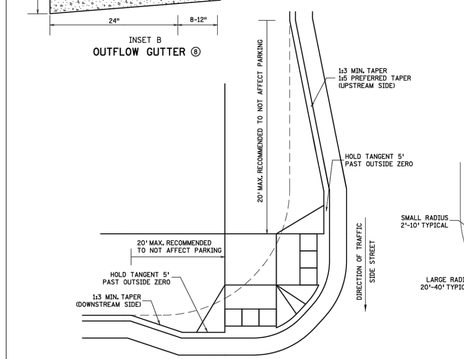

ADA CURB EXTENSION WITH COMPOUND RADIUS (BUMP OUT) ⑪

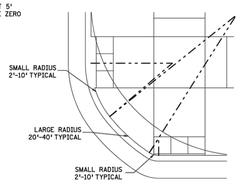

COMBINED DIRECTIONAL ⑩ (COMPOUND RADIUS)

DIRECTION OF TRAFFIC
MAIN STREET

NOTES:
POSITIVE FLOW LINE DRAINAGE SHALL BE MAINTAINED THROUGH THE PEDESTRIAN ACCESS ROUTE (PAR) AT A 2% MAXIMUM.
NO PONDING SHALL BE PRESENT IN THE PAR.
ANY VERTICAL LIP THAT OCCURS AT THE FLOW LINE SHALL NOT BE GREATER THAN 1/4 INCH.

① FOR USE AT CURB CUTS WHERE THE PEDESTRIAN'S PATH OF TRAVEL IS ASSUMED PERPENDICULAR TO THE GUTTER FLOW LINE. RAMP TYPES INCLUDE: PERPENDICULAR, PARALLEL AND DIAGONAL RAMPS.
② FOR USE AT CURB RAMPS WHERE THE PEDESTRIAN'S PATH OF TRAVEL IS ASSUMED NON PERPENDICULAR TO THE GUTTER FLOW LINE. RAMP TYPES INCLUDE: FANS & DEPRESSED CORNERS.
③ BEGIN GUTTER SLOPE TRANSITION 10' OUTSIDE OF ALL CURB RAMPS.
④ THERE SHALL BE NO VERTICAL DISCONTINUITIES GREATER THAN 1/4".
⑤ ELEVATION CHANGE TAKES PLACE FROM THE EXISTING TO NEW FRONT OF GUTTER. PATCH IS USED TO MATCH THE NEW GUTTER FACE INTO THE EXISTING ROADWAY.
⑥ VARIABLE WIDTH FOR DIRECTIONAL CURB APPLICATIONS. SEE SHEET 2 FOR DIRECTIONAL CURB SLOPE REQUIREMENTS.
⑦ TOP FRONT OF GUTTER SHALL BE CONSTRUCTED FLUSH WITH PROPOSED ADJACENT PAVEMENT ELEVATION. TOP 1.5" OF THE GUTTER FACE MUST BE A FORMED EDGE. PAR GUTTER SHALL NOT BE OVERLAID.
⑧ SHOULD BE USED AT VERTICALLY CONSTRAINED AREAS WHEN AT A DRAINAGE HIGH POINT OR SUPER ELEVATED ROADWAY SEGMENTS.
⑨ DRILL AND GROUT NO. 4 EPOXY-COATED 18" LONG TIE BARS AT 30" CENTER TO CENTER INTO EXISTING CONCRETE PAVEMENT 1" MINIMUM FROM ALL JOINTS.
⑩ HELPS PROVIDE TWO SEPARATE RAMPS, REDUCES THE DOME SETBACK LENGTH AND MINIMIZES DIRECTIONAL CURB. THIS RADIUS DESIGN CLOSELY FOLLOWS THE TURNING VEHICLE PATH WHILE OPTIMIZING CURB RAMP LENGTH.
⑪ CURB EXTENSIONS SHOULD BE USED IN VERTICALLY CONSTRAINED AREAS, USUALLY IN DOWNTOWN ROADWAY SEGMENTS WHERE ON-STREET PARKING IS AVAILABLE. CURB EXTENSIONS SHOULD BE CONSIDERED FOR APS INTERSECTIONS WHERE SPACE IS LIMITED. PUSH BUTTONS MUST MEET APS CRITERIA AS DESCRIBED IN THE PUSH BUTTON LOCATION DETAIL SHEET.
⑫ PLACE BOND BREAKER BETWEEN WALK AND TOP OF SILL.
⑬ 1/2" PREFORMED JOINT FILLER PER WNDOT SPEC. 3702.
⑭ DIMENSION TO BE SAME AS SIDEWALK THICKNESS, 4" MIN.

REVISION:
APPROVED: JANUARY 23, 2017
OPERATIONS ENGINEER

PEDESTRIAN CURB RAMP DETAILS
APPROVED: 1-23-2017
STATE DESIGN ENGINEER
STANDARD PLAN 5-297.250 | 3 OF 6

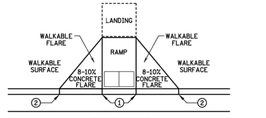

PAVED FLARES
ADJACENT TO WALKABLE SURFACE

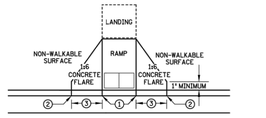

PAVED FLARES
ADJACENT TO NON-WALKABLE SURFACE

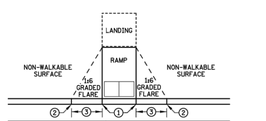

GRADED FLARES

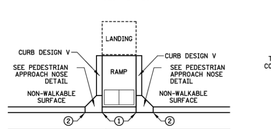

RETURNED CURB ⑮

TYPICAL SIDE TREATMENT OPTIONS ④ ⑮

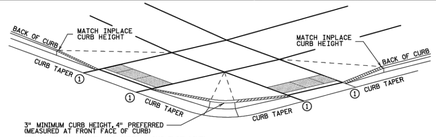

3" MINIMUM CURB HEIGHT, 4" PREFERRED (MEASURED AT FRONT FACE OF CURB)
FOR A MIN. 6" LENGTH (MEASURED ALONG FLOW LINE)

DETECTABLE EDGE WITH ⑧ CURB AND GUTTER

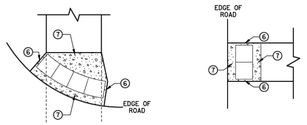

RADIAL DETECTABLE WARNING
RECTANGULAR DETECTABLE WARNING

DETECTABLE EDGE WITHOUT CURB AND GUTTER

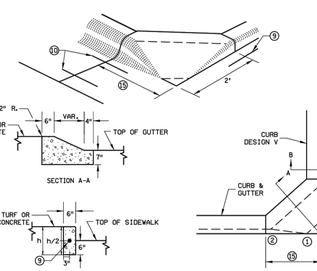

PEDESTRIAN APPROACH NOSE DETAIL
(FOR RETURNED CURB SIDE TREATMENT)

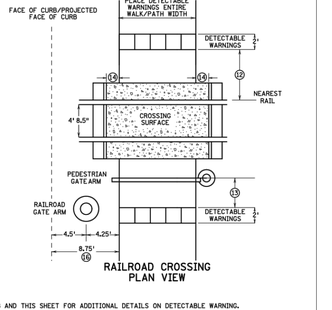

RAILROAD CROSSING PLAN VIEW

NOTES:
SEE STANDARD PLATE 7038 AND THIS SHEET FOR ADDITIONAL DETAILS ON DETECTABLE WARNING.
A WALKABLE SURFACE IS DEFINED AS A PAVED SURFACE ADJACENT TO A CURB RAMP WITHOUT RAISED OBSTACLES THAT COULD MISTAKENLY BE TRAVERSED BY A USER WHO IS VISUALLY IMPAIRED.
CONCRETE FLARE LENGTHS ADJACENT TO NON-WALKABLE SURFACES SHOULD BE LESS THAN 8' LONG MEASURED ALONG THE RAMPS FROM THE BACK OF CURB.

① 0" CURB HEIGHT.
② FULL CURB HEIGHT.
③ 2" FOR 4" HIGH CURB AND 3' FOR 6" HIGH CURB.
④ SIDE TREATMENTS ARE APPLICABLE TO ALL RAMP TYPES AND SHOULD BE IMPLEMENTED AS NEEDED AS FIELD CONDITIONS DICTATE. THE ENGINEER SHALL DETERMINE THE RAMP SIDE TREATMENTS BASED ON MAINTENANCE OF BOTH ROADWAY AND SIDEWALK, ADJACENT PROPERTY CONSIDERATIONS, AND MITIGATING CONSTRUCTION IMPACTS.
⑤ TYPICALLY USED FOR MEDIANS AND ISLANDS.
⑥ WHEN NO CONCRETE FLARES ARE PROPOSED, THE CONCRETE WALK SHALL BE FORMED AND CONSTRUCTED PERPENDICULAR TO THE EDGE OF ROADWAY. MAINTAIN 3" MAX. BETWEEN EDGE OF DOMES AND EDGE OF CONCRETE.
⑦ IF NO CURB AND GUTTER IS PLACED IN RURAL SECTIONS, DETECTABLE WARNINGS SHALL BE PLACED 1' FROM THE EDGE OF BITUMINOUS ROADWAY AND/OR BITUMINOUS SHARED-USE PATH TO PROVIDE VISUAL CONTRAST.
⑧ ALL CONSTRUCTED CURBS MUST HAVE A CONTINUOUS DETECTABLE EDGE FOR THE VISUALLY IMPAIRED. THIS DETECTABLE EDGE REQUIRES DETECTABLE WARNINGS WHEREVER THERE IS ZERO-INCH HIGH CURB. CURB TAPERS ARE CONSIDERED A DETECTABLE EDGE WHEN THE TAPER STARTS WITHIN 3" OF THE EDGE OF THE DETECTABLE WARNINGS AND UNIFORMLY RISES TO A 3-INCH MINIMUM CURB HEIGHT. ANY CURB NOT PART OF A CURB TAPER AND LESS THAN 3 INCHES IN HEIGHT IS NOT CONSIDERED A DETECTABLE EDGE AND THEREFORE IS NOT COMPLIANT WITH ACCESSIBILITY STANDARDS.
⑨ DRILL AND GROUT 1 - NO. 4 12" LONG REINFORCEMENT BAR (EPOXY COATED) WITH 3" MIN. COVER. REINFORCEMENT BARS ARE NOT NEEDED IF THE APPROACH NOSE IS POURED INTEGRAL WITH THE V CURB.
⑩ DRILL AND GROUT 2 - NO. 4 12" LONG REINFORCEMENT BARS (EPOXY COATED) WITH 3" MIN. COVER. REINFORCEMENT BARS ARE NOT NEEDED IF THE APPROACH NOSE IS POURED INTEGRAL WITH THE CURB AND GUTTER.
⑪ SIDE TREATMENT EXAMPLES SHOWN ARE WHEN THE INITIAL LANDING IS APPROXIMATELY LEVEL WITH THE FULL HEIGHT CURB (I.E., 6" LONG RAMP FOR 6" HIGH CURB). WHEN THE INITIAL LANDING IS MORE THAN 1" BELOW FULL HEIGHT CURB REFER TO SHEETS 1 & 2 TO MODIFY THE CURB HEIGHT TAPERS AND MAINTAIN POSITIVE BOULEVARD DRAINAGE.
⑫ NEAREST EDGE OF DETECTABLE WARNING SURFACES SHALL BE PLACED 12' MINIMUM TO 15' MAXIMUM FROM THE NEAREST RAIL. FOR SKEWED RAILWAYS IN NO INSTANCE SHALL THE DETECTABLE WARNING BE CLOSER THAN 12' MEASURED PERPENDICULAR TO THE NEAREST RAIL.
⑬ WHEN PEDESTRIAN GATES ARE PROVIDED, DETECTABLE WARNING SURFACES SHALL BE PLACED ON THE SIDE OF THE GATES OPPOSITE THE RAIL, 2' FROM THE APPROACHING SIDE OF THE GATE ARM. THIS CRITERIA GOVERNS OVER NOTE ⑫.
⑭ CROSSING SURFACE SHALL EXTEND 2' MINIMUM PAST THE OUTSIDE EDGE OF WALK OR SHARED-USE PATH.
⑮ 3' FOR MEDIANS AND 6' SPLITTER ISLANDS. NOSE CAN BE REDUCED TO 2' ON FREE RIGHT ISLANDS.
⑯ SIDEWALK TO BE PLACED 8.75' MIN. FROM THE FACE OF CURB/PROJECTED FACE OF CURB. THIS ENSURES MIN. CLEARANCE BETWEEN THE SIDEWALK AND GATE ARM COUNTERWEIGHT SUPPORTS.

REVISION:
APPROVED: JANUARY 23, 2017
OPERATIONS ENGINEER

PEDESTRIAN CURB RAMP DETAILS
APPROVED: 1-23-2017
STATE DESIGN ENGINEER
STANDARD PLAN 5-297.250 | 4 OF 6

N:\0024429.00\DWG\CIVIL\FINAL\STREET - UTILITY CONSTRUCTION\0024429DTF01.DWG

OAK CREEK

DESIGNED: FDH II
CHECKED: FDH II
DRAWN: KFP/DJW
HORIZONTAL SCALE:
VERTICAL SCALE:

INITIAL ISSUE: 04/29/2022
REVISIONS:
△ 05/24/22 CITY COMMENTS
△ . .
△ . .
△ . .
△ . .

PREPARED FOR:
DR HORTON, INC. - MINNESOTA
20860 KENBRIDGE COURT, SUITE 100
LAKEVILLE, MINNESOTA 55044

I HEREBY CERTIFY THAT THIS PLAN WAS PREPARED BY ME OR UNDER MY DIRECT SUPERVISION A

© 2022 Westwood Professional Services, Inc.

Call 48 Hours before digging:
811 or call811.com
Common Ground Alliance

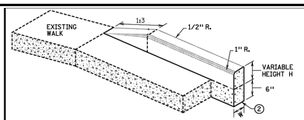

V CURB ADJACENT TO LANDSCAPE
CURB WITHIN SIDEWALK LIMITS

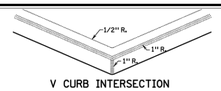

V CURB INTERSECTION

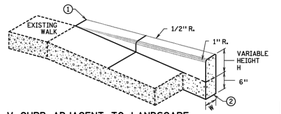

V CURB ADJACENT TO LANDSCAPE
CURB OUTSIDE SIDEWALK LIMITS

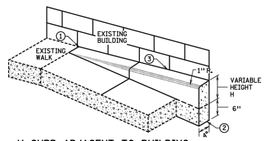

V CURB ADJACENT TO BUILDING OR BARRIER

CONCRETE CURB DESIGN V	
CURB HEIGHT H	CURB WIDTH W
<6"	4"
≥6"	6"

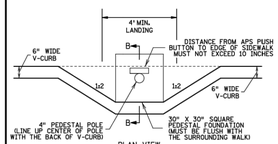

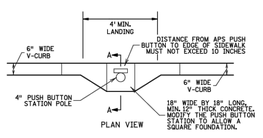

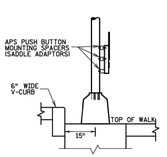

SIGNAL PEDESTAL & PUSH BUTTON (V-CURB)

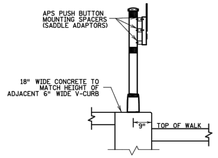

PUSH BUTTON STATION (V-CURB)

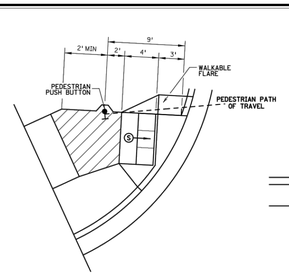

SEMI-DIRECTIONAL RAMP (3,4,9)
3' DOME SETBACK, 4' LONG RAMP AND PUSH BUTTON 9' FROM THE BACK OF CURB

PRIMARILY USED FOR APS APPLICATIONS WHERE THE PAR DOES NOT CONTINUE PAST THE PUSH BUTTON (DEAD-END SIDEWALK)

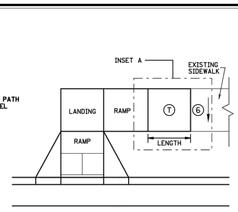

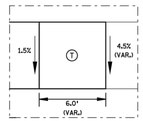

TRANSITION PANEL 4 5

NOTES:

A WALKABLE FLARE IS AN 8-10% CONCRETE FLARE THAT IS REQUIRED WHEN THE FLARE IS ADJACENT TO A WALKABLE SURFACE, OR WHEN THE PEDESTRIAN PATH OF TRAVEL OF A PUSH BUTTON TRAVERSES THE FLARE.

ALL V CURB CONTRACTION JOINTS SHALL MATCH CONCRETE WALK JOINTS.

WHERE RIGHT-OF-WAY ALLOWS, USE OF V CURB SHOULD BE MINIMIZED. GRADING ADJACENT TURF OR SLOPING ADJACENT PAVEMENT IS PREFERRED.

V CURB SHALL BE PLACED OUTSIDE THE SIDEWALK LIMITS WHEN RIGHT OF WAY ALLOWS.

V CURB NEXT TO BUILDING SHALL BE A 4" WIDTH AND SHALL MATCH PREVIOUS TOP OF SIDEWALK ELEVATIONS.

1. END TAPERS AT TRANSITION SECTION SHALL MATCH INPLACE SIDEWALK GRADES.
2. ALL V CURB SHALL MATCH BOTTOM OF ADJACENT WALK.
3. EDGE BETWEEN NEW V CURB AND INPLACE STRUCTURE SHALL BE SEALED AND BOND BREAKER SHALL BE USED BETWEEN EXISTING STRUCTURE AND PLACED V-CURB.
4. THE MAX. RATE OF CROSS SLOPE TRANSITIONING IS 1% LINEAR FOOT OF SIDEWALK PER HALF PERCENT CROSS SLOPE. WHEN PAR WIDTH IS GREATER THAN 6' OR THE RUNNING SLOPE IS GREATER THAN 5%, DOUBLE THE CALCULATED TRANSITION LENGTH.
5. TRANSITION PANELS ARE TO ONLY BE USED AFTER THE RAMP, OR IF NEEDED, LANDING ARE AT THE FULL CURB HEIGHT (TYPICAL SECTION).
6. EXISTING CROSS SLOPE GREATER THAN 2.0%.

LEGEND

THESE LONGITUDINAL SLOPE RANGES SHALL BE THE STARTING POINT. IF SITE CONDITIONS WARRANT, LONGITUDINAL SLOPES UP TO 8.3% OR FLATTER ARE ALLOWED.

- (5) INDICATES PEDESTRIAN RAMP - SLOPE SHALL BE BETWEEN 5.0% MINIMUM AND 8.3% MAXIMUM IN THE DIRECTION SHOWN AND THE CROSS SLOPE SHALL NOT EXCEED 2.0%.
- LANDING AREA - 4' X 4' MIN. (5' X 5' MIN. PREFERRED) DIMENSIONS AND MAX 2.0% SLOPE IN ALL DIRECTIONS. LANDING SHALL BE FULL WIDTH OF INCOMING PARS.
- (T) TRANSITION PANEL(S) - TO BE USED FOR TRANSITIONING THE CROSS-SLOPE OF A RAMP TO THE EXISTING WALK CROSS-SLOPE. RATE OF TRANSITION SHOULD BE 0.5% PER 1 LINEAR FOOT OF WALK. SEE THIS SHEET FOR ADDITIONAL INFORMATION.

REVISIONS:
APPROVED: JANUARY 23, 2017
OPERATIONS ENGINEER

REVISED:
APPROVED: Tom Sill
STATE DESIGN ENGINEER
1-23-2017

PEDESTRIAN CURB RAMP DETAILS
STANDARD PLAN 5-297.250 | 5 OF 6

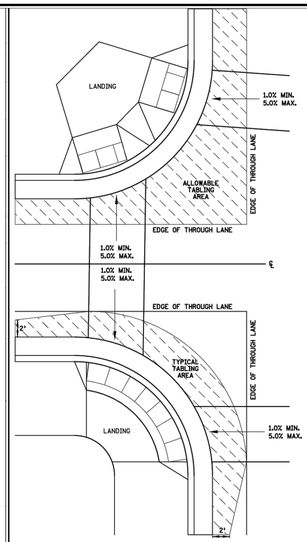

CURB LINE AND ROAD CROSSING ADJUSTMENTS

"TABLING" OF CROSSWALKS MEANS MAINTAINING LESS THAN 2% CROSS SLOPE WITHIN A CROSSWALK, IS REQUIRED WHEN A ROADWAY IS IN A STOP OR YIELD CONDITION AND THE PROJECT SCOPE ALLOWS.

RECONSTRUCTION PROJECTS ON FULL PAVEMENT REPLACEMENT PROJECTS
"TABLING" OF ENTIRE CROSSWALK SHALL OCCUR WHEN FEASIBLE.

MILL & OVERLAY PROJECTS "TABLING" OF FLOW LINES, IN FRONT OF THE PEDESTRIAN RAMP, IS REQUIRED WHEN THE EXISTING FLOW LINE IS GREATER THAN 2% RAMP OF THE BITUMINOUS PAVEMENT CAN NOT EXTEND INTO THE THROUGH LANE. TABLE THE FLOW LINE TO 2% OR AS MUCH AS POSSIBLE WHILE ADHERING TO THE FOLLOWING CRITERIA:
1) 1.0% MIN. CROSS-SLOPE OF THE ROAD
2) 5.0% MAX. CROSS-SLOPE OF THE ROAD
3) "TABLE" FLOW LINE UP TO 4% CHANGE FROM EXISTING SLOPE IN FRONT OF PEDESTRIAN RAMP
4) UP TO 2% CHANGE IN FLOW LINE FROM EXISTING SLOPE BEYOND THE PEDESTRIAN CURB RAMP

STAND-ALONE ADA RETROFITS: FOLLOW MILL & OVERLAY CRITERIA ABOVE HOWEVER ALL PAVEMENT WARPING IS DONE WITH BITUMINOUS PATCHING ON BITUMINOUS ROADWAYS AND FULL-DEPTH APRON REPLACEMENT ON CONCRETE ROADWAYS.

RAISING OF CURB LINES SHOULD OCCUR IN VERTICALLY CONSTRAINED AREAS. RAISE THE CURB LINES ENOUGH TO ALLOW COMPLIANT RAMPS OR AS MUCH AS POSSIBLE WHILE ADHERING TO THE FOLLOWING CRITERIA:
1) 1.0% MIN. AND 5.0% MAXIMUM CROSS-SLOPE OF THE ROAD
2) 1.0% MIN. FLOW LINE (ON EITHER SIDE OF PEDESTRIAN RAMP) TO MAINTAIN POSITIVE DRAINAGE
3) 5.0% RECOMMENDED MAX. FLOW LINE
4) LONGITUDINAL THROUGH LANE ROADWAY TAPERS SHOULD BE 1" VERTICAL PER 15' HORIZONTAL

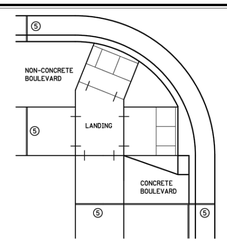

EXPANSION MATERIAL PLACEMENT FOR CONCRETE AND BITUMINOUS ROADWAYS

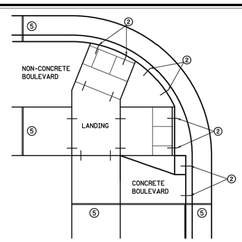

OPTIONAL CURB LINE REINFORCEMENT PLACEMENT ON BITUMINOUS ROADWAYS 4

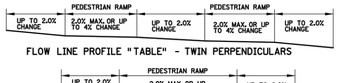

FLOW LINE PROFILE "TABLE" - TWIN PERPENDICULARS

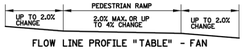

FLOW LINE PROFILE "TABLE" - FAN

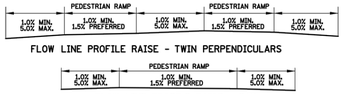

FLOW LINE PROFILE RAISE - TWIN PERPENDICULARS



FLOW LINE PROFILE RAISE - FAN

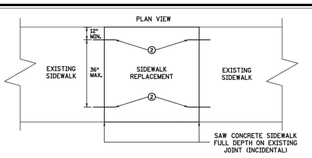

OPTIONAL SIDEWALK REINFORCEMENT
SIDEWALK REINFORCEMENT TO BE USED ONLY WHEN SPECIFIED IN THE PLAN.

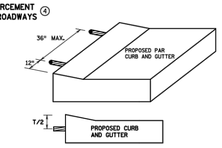

OPTIONAL CURB LINE REINFORCEMENT DETAILS 2 4

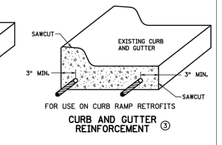

FOR USE ON CURB RAMP RETROFITS
CURB AND GUTTER REINFORCEMENT 3

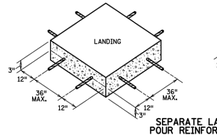

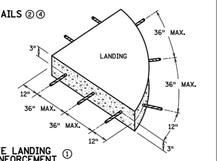

SEPARATE LANDING POUR REINFORCEMENT 1

NOTES:

1. TO ENSURE RAMPS AND LANDINGS ARE PROPERLY CONSTRUCTED, ALL INITIAL LANDINGS AT A TOP OF A RAMPED SURFACE (RUNNING SLOPE GREATER THAN 2.5) SHALL BE FORMED AND PLACED SEPARATELY IN AN INDEPENDENT CONCRETE POUR. FOLLOW SIDEWALK REINFORCEMENT DETAILS ON THIS SHEET FOR ALL SEPARATELY POURED INITIAL LANDINGS.
2. DRILL AND GROUT NO. 4 12" LONG REINFORCEMENT BARS AT 36" MAXIMUM CENTER TO CENTER (EPOXY COATED). BARS TO BE ADJUSTED TO MATCH RAMP GRADE.
3. DRILL AND GROUT 2 - NO. 4 X 12" LONG REINFORCEMENT BARS (EPOXY COATED). REINFORCEMENT REQUIRED FOR ALL CONSTRUCTION JOINTS WITHIN RADIUS.
4. THIS OPTIONAL CURB LINE REINFORCEMENT DETAIL SHOULD ONLY BE USED ON BITUMINOUS ROADWAYS WHEN SPECIFIED IN THE PLAN.
5. 1/2 IN. PREFORMED JOINT FILLER MATERIAL PER MNDOT SPEC. 3702.

REVISED:
APPROVED: Tom Sill
STATE DESIGN ENGINEER
1-23-2017

PEDESTRIAN CURB RAMP DETAILS
STANDARD PLAN 5-297.250 | 6 OF 6

N:\0024429.00\DWG\CIVIL\FINAL\STREET - UTILITY CONSTRUCTION\0024429DTF01.DWG

OAK CREEK

DESIGNED: FDH II
CHECKED: FDH II
DRAWN: KFP/DJW
HORIZONTAL SCALE:
VERTICAL SCALE:

INITIAL ISSUE: 04/29/2022
REVISIONS:
1 05/24/22 CITY COMMENTS
2 . .
3 . .
4 . .
5 . .

PREPARED FOR:
DR HORTON, INC. - MINNESOTA
20860 KENBRIDGE COURT, SUITE 100
LAKEVILLE, MINNESOTA 55044

I HEREBY CERTIFY THAT THIS PLAN WAS PREPARED BY ME OR UNDER MY DIRECT SUPERVISION AND THAT I AM A DULY LICENSED PROFESSIONAL ENGINEER UNDER THE LAWS OF THE STATE OF MINNESOTA.
FRANCIS D. HAGEN
DATE: 05/24/22 LICENSE NO. 17716

OAK CREEK
CHASKA, MN

Westwood
Phone (952) 937-5150 12701 Whitewater Drive, Suite #300
Fax (952) 937-5822 Minnetonka, MN 55343
Toll Free (888) 937-5150 westwoodps.com
Westwood Professional Services, Inc.

DETAILS

SHEET NUMBER: 26 OF 28
PROJECT NUMBER: 0024429.00
DATE: 05/24/22

© 2022 Westwood Professional Services, Inc.

Call 48 Hours before digging:
811 or call811.com
Common Ground Alliance

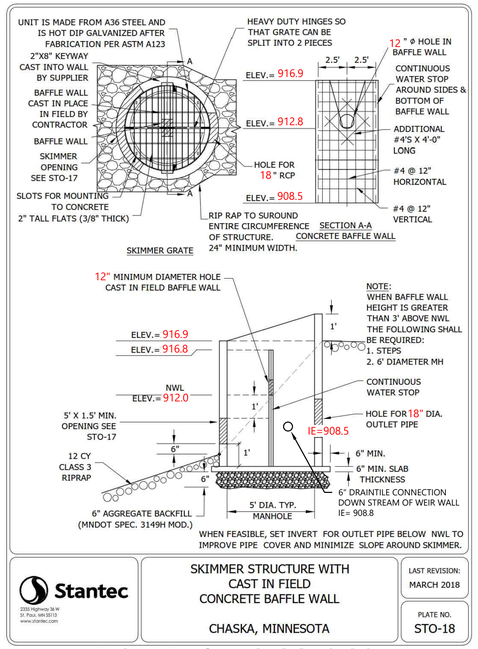

Stantec
2335 Highway 36 W
St. Paul, MN 55113
www.stantec.com

SKIMMER STRUCTURE WITH CAST IN FIELD CONCRETE BAFFLE WALL

CHASKA, MINNESOTA

LAST REVISION: MARCH 2018

PLATE NO. STO-18

POND 1 - OCS-269

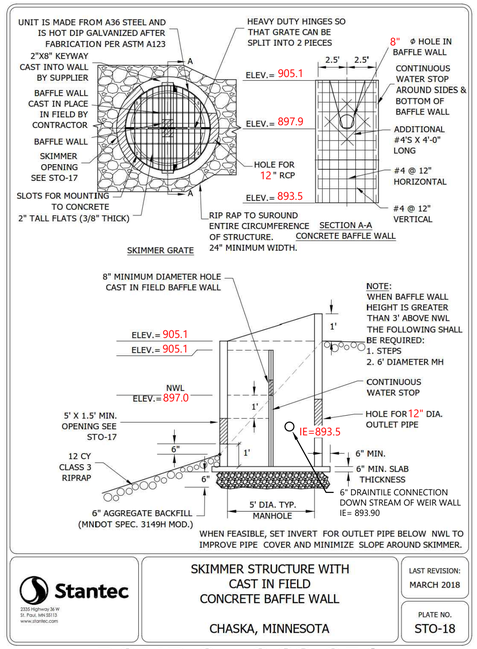

Stantec
2335 Highway 36 W
St. Paul, MN 55113
www.stantec.com

SKIMMER STRUCTURE WITH CAST IN FIELD CONCRETE BAFFLE WALL

CHASKA, MINNESOTA

LAST REVISION: MARCH 2018

PLATE NO. STO-18

POND 2 - OCS-251

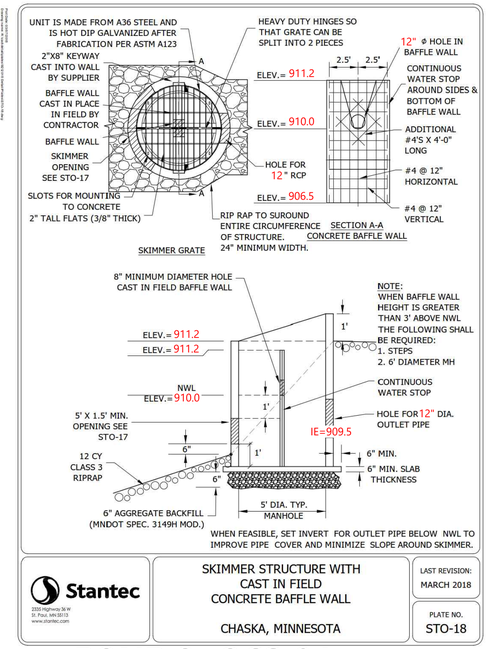

Stantec
2335 Highway 36 W
St. Paul, MN 55113
www.stantec.com

SKIMMER STRUCTURE WITH CAST IN FIELD CONCRETE BAFFLE WALL

CHASKA, MINNESOTA

LAST REVISION: MARCH 2018

PLATE NO. STO-18

POND 3- OCS-94

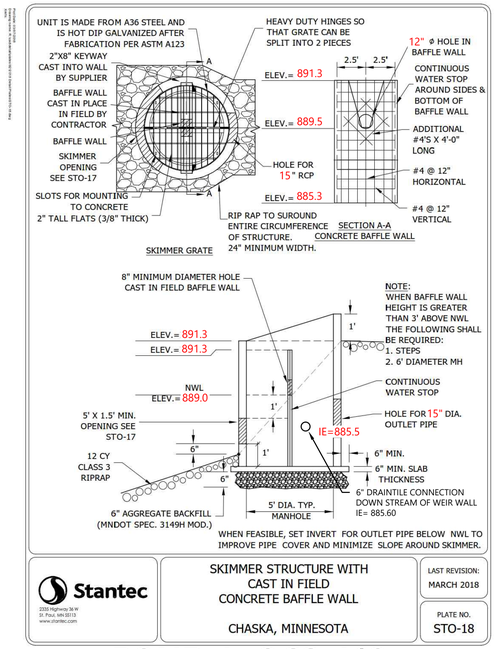

Stantec
2335 Highway 36 W
St. Paul, MN 55113
www.stantec.com

SKIMMER STRUCTURE WITH CAST IN FIELD CONCRETE BAFFLE WALL

CHASKA, MINNESOTA

LAST REVISION: MARCH 2018

PLATE NO. STO-18

POND 4- OCS-412

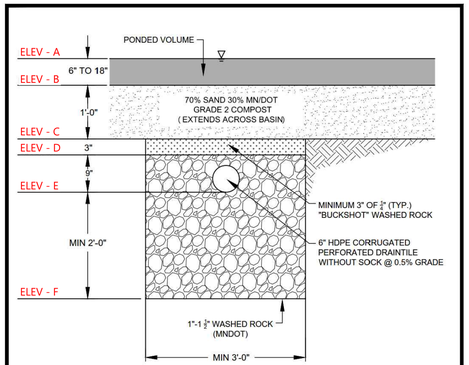

CALCULATIONS TO MEET RULES

VOLUME:

1. VOLUME REDUCTION IS CALCULATED AS 40% OF PONDED VOLUME.
2. IF NO VEGETATION IS PROVIDED, THE VOLUME CALCULATION IS LOWERED TO 50% OF ROCK VOLUME BELOW TILE.
3. TILE INVERT MUST BE 3 FT ABOVE DOWNSTREAM NWL, GROUNDWATER, BEDROCK, ETC.

WATER QUALITY:

1. FILTRATION IS CALCULATED AS 75% TP REMOVAL AND 90% TSS REMOVAL.

DRAWDOWN:

1. 48 HOUR DRAWDOWN OF BMPS IS REQUIRED. TO DETERMINE LENGTH OF TRENCH NEEDED, USE FILTRATION RATE OF 50 CF OF PONDED VOLUME WILL PASS THROUGH ONE LINEAR FOOT OF 3' WIDE TRENCH, OR 17 CF OF PONDED VOLUME PER SF OF SURFACE AREA.

CARVER COUNTY	WENCK ASSOCIATES Responsive partner. Exceptional outcomes.	BIORETENTION TRENCH	DEC 2016
			DETAIL 1

M:\1709\GENERAL DETAILS\December 2016 Details\1 - BIORETENTION TRENCH.dwg

PONDS 1, 2 and 4

POND BENCH						
POND #	ELEV. A	B	C	D	E	F
POND 1	912.8	912.0	911.0	910.75	910.0	908.0
POND 2	897.9	897.0	896.0	895.75	895.0	893.0
POND 4	889.5	889.0	888.0	887.75	887.0	885.0

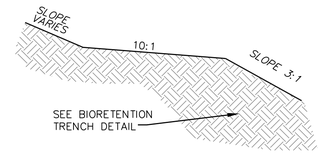

POND BENCH DETAIL

N:\0024429.00\DWG\CIVIL\FINALLSTREET - UTILITY CONSTRUCTION\0024429DTF01.DWG

OAK CREEK

DESIGNED: FDH II
CHECKED: FDH II
DRAWN: KFP/DJW
HORIZONTAL SCALE:
VERTICAL SCALE:

INITIAL ISSUE: 04/29/2022
REVISIONS:
05/24/22 CITY COMMENTS

PREPARED FOR:

DR HORTON, INC. - MINNESOTA
20860 KENBRIDGE COURT, SUITE 100
LAKEVILLE, MINNESOTA 55044

I HEREBY CERTIFY THAT THIS PLAN WAS PREPARED BY ME OR UNDER MY DIRECT SUPERVISION AND THAT I AM A DULY LICENSED PROFESSIONAL ENGINEER UNDER THE LAWS OF THE STATE OF MINNESOTA
FRANCIS D. HAGEN
DATE: 05/24/22 LICENSE NO. 17716

OAK CREEK
CHASKA, MN

Westwood
Phone (952) 937-5150 12701 Whitewater Drive, Suite #300
Fax (952) 937-5822 Minnetonka, MN 55343
Toll Free (888) 937-5150 westwoodps.com
Westwood Professional Services, Inc.

DETAILS

PROJECT NUMBER: 0024429.00

SHEET NUMBER: 27 OF 28

DATE: 05/24/22

© 2022 Westwood Professional Services, Inc.

Call 48 Hours before digging:
811 or call811.com
Common Ground Alliance

STATION DATA		
PUMP CAPACITY (EACH)		GPM
PUMP HEAD (TDH)		FEET
MOTOR HORSEPOWER		HP
MOTOR SPEED		RPM
ELECTRICAL SERVICE	VOLT , PHASE	HZ
SECONDARY SERVICE	CONDUIT & WIRE SIZE	
DISCONNECT SIZE		AMP

NOTES:
1. PIPE AND FITTINGS INSIDE STRUCTURES SHALL BE FLANGED.
2. WET WELL MUST BE SIZED AND DESIGNED.
3. VALVE VAULT MUST BE SIZED.
4. INLET AND DISCHARGE PIPING, VALVES AND FITTINGS MUST BE SIZED.
5. HATCHES MUST BE SIZED.
6. SECONDARY ELECTRICAL SERVICE MUST BE SIZED.
7. PUMP STATION DATA TABLE ABOVE MUST BE COMPLETED.
8. SITE TO PROVIDE ADEQUATE ACCESS AND STABILITY.

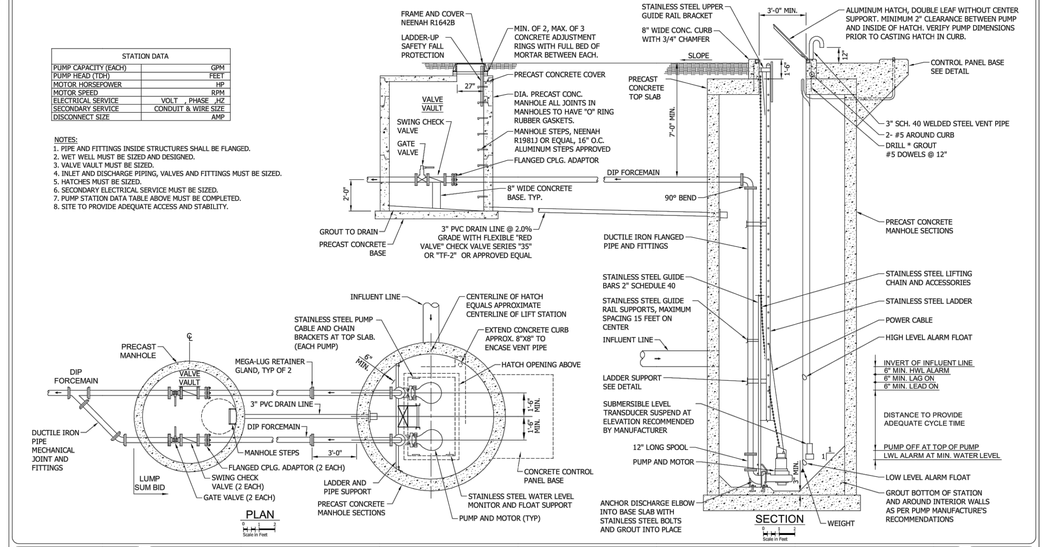

WASTEWATER PUMPING STATION
MISCELLANEOUS DETAILS

CHASKA, MINNESOTA

LAST REVISION: JUNE 2018

PLATE NO. MIS-1A

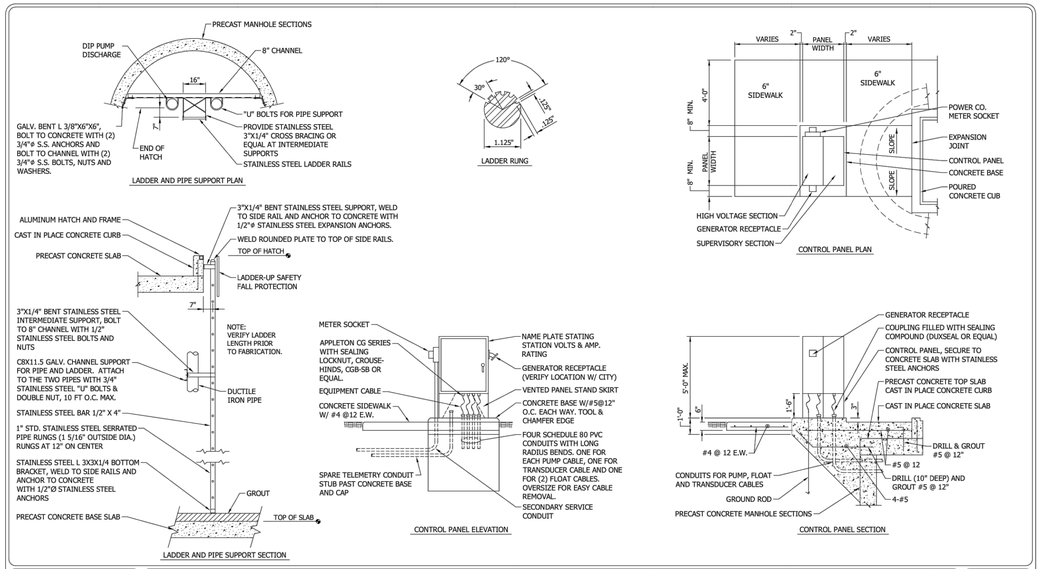

WASTEWATER PUMPING STATION
MISCELLANEOUS DETAILS

CHASKA, MINNESOTA

LAST REVISION: JUNE 2018

PLATE NO. MIS-1B

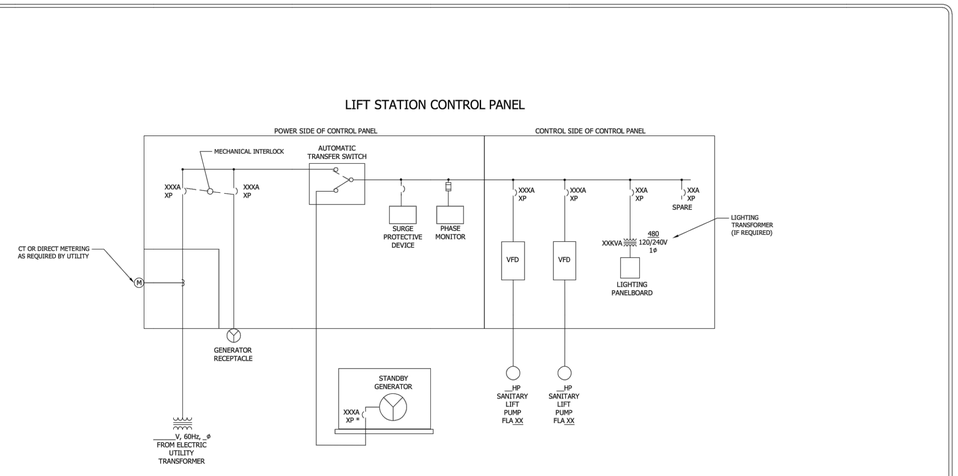

WASTEWATER PUMPING STATION
MISCELLANEOUS DETAILS

CHASKA, MINNESOTA

LAST REVISION: JUNE 2018

PLATE NO. MIS-1C

NOTES

1. ALL CONSTRUCTION SHALL CONFORM TO THE CITY OF CHASKA ENGINEERING GUIDELINES, CH. 15, "WASTEWATER PUMPING STATION STANDARDS".
2. THE CONTRACTOR SHALL SUBMIT SHOP DRAWINGS AND OBTAIN CITY APPROVAL PRIOR TO ORDERING.
3. THE SITE SHALL BE CONSTRUCTED AND GRADED TO PROVIDE POSITIVE DRAINAGE AWAY FROM THE ACCESS POINTS FOR THE WETWELL AND VALVE VAULT.
4. THE CONTRACTOR SHALL INSTALL AN INTRAFLOW LOW PROFILE INSIDE DROP SYSTEM PER MANUFACTURERS RECOMMENDATION FOR THE GRAVITY INFLUENT LINE.
5. ALL HARDWARE IN THE WET WELL AND VALVE VAULT SHALL BE 316 STAINLESS STEEL.
6. THERE SHALL BE NO VALVES OR ELECTRICAL JUNCTION BOXES IN WET WELL.
7. ALL LOCATIONS WHERE PIPES ENTER OR EXIT THE WET WELL SHALL BE MADE WATERTIGHT WITH NON-SHRINK GROUT.
8. RISER PIPE TO BE INSTALLED WITH INTERMEDIATE BRACKETS IF WET WELL DEPTH IS GREATER THAN 15 FEET. INTERMEDIATE BRACKETS SHALL BE 316 SS 2"X2"X1/4" ANGLE WELDED TO 4"X4"X1/4" 316 SS PLATE. PLATE SHALL BE ATTACHED TO WET WELL WALL WITH 3/8" 316 SS ANCHORS.
9. ALL D.I. FITTINGS MUST BE CERAMIC EPOXY COATED.
10. BASE AND FIRST RISER UNIT SHALL BE CAST MONOLITHIC.
11. INFLUENT PIPE TO BE CONSTRUCTED WITH KOR-N-SEAL FLEXIBLE BOOT W/ 316 S.S. STRAPS WITH ANNULAR SPACE FILLED WITH NON-SHRINK GROUT.
12. GUIDE RAILS TO INCLUDE INTERMEDIATE 316 S.S. BRACKETS SIMILAR TO RISER SUPPORT BRACKETS, SPACED AT 10-FOOT INTERVALS.
13. CONTRACTOR SHALL INSTALL A 36"X48" HALLIDAY HATCH (MODEL NO. S1R 3648) FOR THE WET WELL.

DATA TABLE:

OPERATING CONDITIONS	
PUMP CAPACITY (EACH)	83 GPM
PUMP HEAD (TDH)	38.0 FEET
PUMP DATA	
PUMPS	TBD
MOTOR HORSEPOWER	TBD
MOTOR SPEED	TBD
ELECTRICAL SERVICE	TBD
SECONDARY SERVICE	TBD
DISCONNECT SIZE	TBD
STRUCTURES	
WETWELL DIAMETER	8 FT
VALVE VAULT DIAMETER	6 FT
BOTTOM SLAB THICKNESS	12 INCHES (10 FT DIAM.)
STATION ELEVATIONS (INGVD29)	
TOP OF HATCH/RIM	906.00 FT
INFLUENT INVERT IN	884.66 FT
HWL ALARM ON	883.50 FT
LAG PUMP ON	883.00 FT
LEAD PUMP ON	881.50 FT
PUMPS OFF	880.00 FT
LWL ALARM ON	879.00 FT
WETWELL INVERT	877.00 FT

N:\0024429.00\DWG\CIVIL\FINALSTREET - UTILITY CONSTRUCTION\0024429DTF01.DWG

OAK CREEK

DESIGNED: FDH II
CHECKED: FDH II
DRAWN: KFP/DJW
HORIZONTAL SCALE:
VERTICAL SCALE:

INITIAL ISSUE: 04/29/2022
REVISIONS:
1 05/24/22 CITY COMMENTS
2 . .
3 . .
4 . .
5 . .

PREPARED FOR:
DR HORTON, INC. - MINNESOTA
20860 KENBRIDGE COURT, SUITE 100
LAKEVILLE, MINNESOTA 55044

I HEREBY CERTIFY THAT THIS PLAN WAS PREPARED BY ME OR UNDER MY DIRECT SUPERVISION AND THAT I AM A DULY LICENSED PROFESSIONAL ENGINEER UNDER THE LAWS OF THE STATE OF MINNESOTA.
FRANCIS D. HAGEN
DATE: 05/24/22 LICENSE NO. 17716

OAK CREEK
CHASKA, MN

Westwood
Phone (952) 937-5150 12701 Whitewater Drive, Suite #300
Fax (952) 937-5822 Minnetonka, MN 55343
Toll Free (888) 937-5150 westwoodps.com
Westwood Professional Services, Inc.

LIFT STATION DETAILS

PROJECT NUMBER: 0024429.00

SHEET NUMBER: 28 OF 28
DATE: 05/24/22

© 2022 Westwood Professional Services, Inc.

CONSTRUCTION PLANS

FOR

GRADING, DRAINAGE AND EROSION CONTROL

FOR

OAK CREEK

CHASKA, MN

PREPARED FOR:

DR HORTON, INC. - MINNESOTA

20860 KENBRIDGE COURT, SUITE 100

LAKEVILLE, MINNESOTA 55044

CONTACT: RICK THOMSON

PHONE: 952-985-7430

EMAIL: RLTHOMSON@DRHORTON.COM

PREPARED BY:

Westwood

Phone (952) 937-5150 12701 Whitewater Drive, Suite #300
Fax (952) 937-5822 Minnetonka, MN 55343
Toll Free (888) 937-5150 westwoodps.com

Westwood Professional Services, Inc.

PROJECT NUMBER: 0024429.00

CONTACT: FRANCIS D. HAGEN



Vicinity Map
(NOT TO SCALE)

SHEET INDEX

Sheet List Table	
SHEET NUMBER	SHEET TITLE
1	Cover
2	Overall Grading Plan
3	Grading Drainage & Erosion Control
4	Grading Drainage & Erosion Control
5	Grading Drainage & Erosion Control
6	Grading Drainage & Erosion Control
7	Topsoil Management Plan
8	Typical Street Sections Pond Overflow Details
9	Typical Lot Sections
10	Street Profiles
11	Street Profiles
12	Street Profiles
13	Details
14	Details
15	OVERALL TREE PRESERVATION PLAN
16	TREE PRESERVATION PLAN
17	TREE PRESERVATION PLAN
18	TREE PRESERVATION PLAN
19	TREE PRESERVATION PLAN & DATA

BENCHMARKS

MnDOT CONTROL POINT "GUERN"
POINT #7002
EL = 970.38

MnDOT CONTROL POINT "VICTORY"
POINT #7003
EL = 995.14

HORIZONTAL DATUM
1983NAD (1986 ADJ) CARVER COUNTY COORDINATE SYSTEM; US SURVEY FOOT

VERTICAL DATUM
1988NAVD US SURVEY FOOT

NO.	DATE	REVISION	SHEETS
.	05/24/2022	CITY COMMENTS	ALL
	.	.	
	.	.	
	.	.	
	.	.	
	.	.	
	.	.	
	.	.	
	.	.	
	.	.	

CONSTRUCTION PLANS
FOR
GRADING, DRAINAGE AND EROSION CONTROL
FOR
OAK CREEK
CHASKA, MN

INITIAL SUBMITTAL DATE: 04/22/2022 SHEET: 1 OF 19

C:\0024429.00\DWG\CIVIL\FINAL\FINAL GRADING\0024429S-CVF01.DWG

© 2022 Westwood Professional Services, Inc.

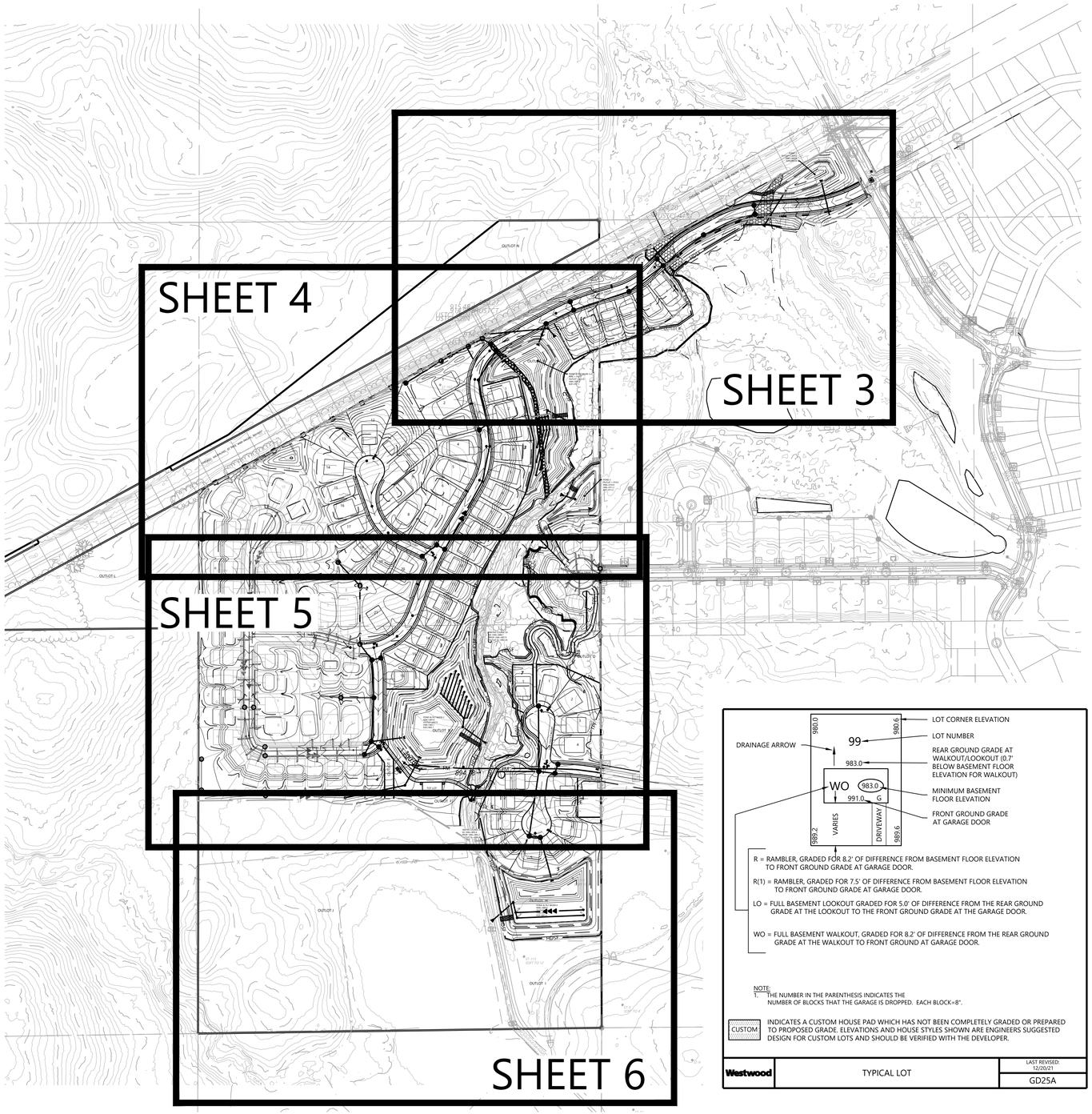

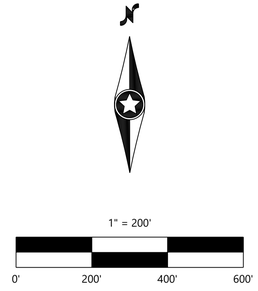

GRADING & EROSION CONTROL LEGEND

EXISTING	PROPOSED	
		PROPERTY LINE
SB-19	SB-19	SOIL BORING LOCATION
980	980	INDEX CONTOUR
982	982	INTERVAL CONTOUR
× 900.00	× 900.00	SPOT ELEVATION
	× HP/LP 900.00	HIGH/LOW POINT
	× CL-CL 900.00	CL-CL ELEVATION
	0.00%	FLOW DIRECTION
	TW=XXX.XX BW=XXX.XX	TOP AND BOTTOM OF RETAINING WALL
	E.O.F.	EMERGENCY OVERFLOW
	X.XX%	PROPOSED STREET PROFILE GRADE
STO		STORM SEWER
		TREE LINE
	TPF	TREE PROTECTION FENCE
		RETAINING WALL (MODULAR BLOCK)
	GL	GRADING LIMITS
	SF	SILT FENCE
	POST-SF	SILT FENCE-POST GRADING
	HDSF	HEAVY DUTY SILT FENCE
	RSC	REDUNDANT SEDIMENT CONTROL
		INLET PROTECTION
		EROSION CONTROL CHECKS/BIOROLLS
		ROCK CONSTRUCTION ENTRANCE
		EROSION CONTROL BLANKET
		TURF REINFORCEMENT MAT
		POND NORMAL WATER LEVEL
		WETLAND LINE
		WETLAND FILL
		WETLAND BUFFER
		POND ACCESS MAINTENANCE BENCH
		WETLAND BUFFER LIMITS
		WETLAND BUFFER MONUMENT
	DND	DO NOT DISTURB

GRADING & DRAINAGE NOTES

1. ALL CONTOURS AND SPOT ELEVATIONS ARE SHOWN TO FINISHED SURFACE/GUTTER GRADES UNLESS OTHERWISE NOTED.
2. REFER TO THE SITE PLAN/RECORD PLAT FOR MOST CURRENT HORIZONTAL SITE DIMENSIONS AND LAYOUT.
3. THE CONTRACTOR SHALL VERIFY THE LOCATION AND ELEVATION OF EXISTING UTILITIES AND TOPOGRAPHICAL FEATURES WITH THE OWNERS AND FIELD-VERIFY PRIOR TO CONSTRUCTION. THE CONTRACTOR SHALL IMMEDIATELY NOTIFY THE ENGINEER OF ANY DISCREPANCIES OR VARIATIONS FROM PLAN.
4. ALL CONSTRUCTION SHALL CONFORM TO LOCAL RULES.
5. THE CONTRACTOR IS TO CONTACT GOPHER STATE "ONE CALL" FOR UTILITY LOCATIONS AT 651-454-0002.
6. THE GRADING CONTRACTOR MUST BE AWARE OF ALL EXISTING AND PROPOSED UTILITIES.
7. HAULING HOURS MUST BE CONFIRMED WITH THE CITY PRIOR TO BEGINNING WORK/
8. POSITIVE DRAINAGE FROM THE SITE MUST BE PROVIDED AT ALL TIMES.

EROSION CONTROL NOTES

1. ALL SILT FENCE AND OTHER EROSION CONTROL FEATURES SHALL BE IN-PLACE PRIOR TO ANY EXCAVATION/CONSTRUCTION AND SHALL BE MAINTAINED UNTIL VIABLE TURF OR GROUND COVER HAS BEEN ESTABLISHED. EXISTING SILT FENCE ON-SITE SHALL BE MAINTAINED AND OR REMOVED AND SHALL BE CONSIDERED INCIDENTAL TO THE GRADING CONTRACT. IT IS OF EXTREME IMPORTANCE TO BE AWARE OF CURRENT FIELD CONDITIONS WITH RESPECT TO EROSION CONTROL. TEMPORARY PONDING, DIKES, HAY BALES, ETC., REQUIRED BY THE CITY SHALL BE INCIDENTAL TO THE GRADING CONTRACT.
2. ALL STREETS DISTURBED DURING WORKING HOURS MUST BE CLEANED AT THE END OF EACH WORKING DAY. A ROCK ENTRANCE TO THE SITE MUST BE PROVIDED ACCORDING TO DETAILS TO REDUCE TRACKING OF DIRT ONTO PUBLIC STREETS.
3. REDUNDANT PERIMETER SEDIMENT CONTROLS ARE NECESSARY WHEN SOIL DISTURBANCE IS WITHIN 50 FEET OF SURFACE WATERS. REDUNDANT SEDIMENT CONTROLS COULD INCLUDE:
   - 3.1. TWO ROWS OF SILT FENCE (SEPARATED BY 8 FEET); OR
   - 3.2. SILT FENCE AND A TOPSOIL BERM (STABILIZE BERM WITH MULCH); OR
   - 3.3. SILT FENCE AND FIBER LOGS; OR
   - 3.4. TOPSOIL BERM AND FIBER LOGS (STABILIZE BERM WITH MULCH).
4. REDUNDANT SEDIMENT CONTROLS MUST BE INSTALLED PRIOR TO DISTURBING WITHIN 50 FEET OF THE SURFACE WATER.

Call 48 Hours before digging:
811 or call811.com
Common Ground Alliance

N:\0024429.00\DWG\CIVIL\FINAL\FINAL GRADING\0024429C-OVF01.DWG

OAK CREEK

DESIGNED:	FDH II
CHECKED:	FDH II
DRAWN:	FDH III
HORIZONTAL SCALE:	200'
VERTICAL SCALE:	40' OR 20'

INITIAL ISSUE: 04/22/2022
REVISIONS:
1 05/24/22 CITY COMMENTS
2 . .
3 . .
4 . .
5 . .

PREPARED FOR:

DR HORTON, INC. - MINNESOTA

20860 KENBRIDGE COURT, SUITE 100
LAKEVILLE, MINNESOTA 55044

I HEREBY CERTIFY THAT THIS PLAN WAS PREPARED BY ME OR UNDER MY DIRECT SUPERVISION AND THAT I AM A DULY LICENSED PROFESSIONAL ENGINEER UNDER THE LAWS OF THE STATE OF MINNESOTA

FRANCIS D. HAGEN

DATE: 05/24/22 LICENSE NO. 17716

OAK CREEK

CHASKA, MN

Westwood

Phone (952) 937-5150
Fax (952) 937-5822
Toll Free (888) 937-5150
12701 Whitewater Drive, Suite #300
Minnetonka, MN 55343
westwoodps.com

Westwood Professional Services, Inc.

OVERALL GRADING PLAN

PROJECT NUMBER: 0024429.00

SHEET NUMBER: 2 OF 19

DATE: 05/24/22

© 2022 Westwood Professional Services, Inc.

Call 48 Hours before digging:
811 or call811.com
Common Ground Alliance

CHICAGO, MILWAUKEE, ST. PAUL AND PACIFIC RAILWAY

CLOVER RIDGE DRIVE

OAK CREEK DRIVE

OUTLOT N

OUTLOT A

OUTLOT B

OUTLOT B

POND 7
OUTLET = 934.0
HWL=934.8
EOF=937.0

FUTURE STORM SEWER
& OCS (BY OTHERS)

E.O.F.
937.0

SEE SHEET 8 FOR DETAIL

STORM SEWER STUB

STUB STORM SEWER
FOR FUTURE DEVELOPMENT

7,492 SF WETLAND IMPACT

9,940 SF WETLAND IMPACT

924.20
USTCI 44IN

923.79
USTCI 44IN

EXISTING
OVERFLOW
927.40

920.27
USTCT

915.48
USTCI 52IN

914.96
USTCI 52IN

914.58
USTCI 52IN

E.O.F.
919.8

ELEV 919.88

E.O.F.
919.8

HOME BUILDER TO CONSTRUCT
RETAINING WALL AS NEEDED
DURING HOME CONSTRUCTION
TO MAINTAIN PROPER DRAINAGE

POND 8 FILT BASIN 1
NWL = 912.0
OUTLET = 912.8
HWHL=916.8
EOF=917.1

SEE SHEET 8 FOR DETAIL

E.O.F.
917.1

DRAINAGE ARROW

LOT CORNER ELEVATION

LOT NUMBER

REAR GROUND GRADE AT WALKOUT/LOOKOUT (0.7' BELOW BASEMENT FLOOR ELEVATION FOR WALKOUT)

MINIMUM BASEMENT FLOOR ELEVATION

FRONT GROUND GRADE AT GARAGE DOOR

R = RAMBLER, GRADED FOR 8.2' OF DIFFERENCE FROM BASEMENT FLOOR ELEVATION TO FRONT GROUND GRADE AT GARAGE DOOR.

R(1) = RAMBLER, GRADED FOR 7.5' OF DIFFERENCE FROM BASEMENT FLOOR ELEVATION TO FRONT GROUND GRADE AT GARAGE DOOR.

LO = FULL BASEMENT LOOKOUT GRADED FOR 5.0' OF DIFFERENCE FROM THE REAR GROUND GRADE AT THE LOOKOUT TO THE FRONT GROUND GRADE AT THE GARAGE DOOR.

WO = FULL BASEMENT WALKOUT, GRADED FOR 8.2' OF DIFFERENCE FROM THE REAR GROUND GRADE AT THE WALKOUT TO FRONT GROUND AT GARAGE DOOR.

NOTE:
1. THE NUMBER IN THE PARENTHESIS INDICATES THE NUMBER OF BLOCKS THAT THE GARAGE IS DROPPED. EACH BLOCK=8".

CUSTOM — INDICATES A CUSTOM HOUSE PAD WHICH HAS NOT BEEN COMPLETELY GRADED OR PREPARED TO PROPOSED GRADE. ELEVATIONS AND HOUSE STYLES SHOWN ARE ENGINEERS SUGGESTED DESIGN FOR CUSTOM LOTS AND SHOULD BE VERIFIED WITH THE DEVELOPER.

Westwood	TYPICAL LOT	LAST REVISED: 12/20/21 GD25A

1" = 50'

0' 50' 100' 150'

N

OAK CREEK

N:\0024429.00\DWG\CIVIL\FINAL\FINAL GRADING\0024429C-GDP01.DWG

DESIGNED:	FDH II
CHECKED:	FDH II
DRAWN:	FDH III
HORIZONTAL SCALE:	50'
VERTICAL SCALE:	10' OR 5'

INITIAL ISSUE: 04/22/2022
REVISIONS:
1 05/24/22 CITY COMMENTS
2 . .
3 . .
4 . .
5 . .

PREPARED FOR:

DR HORTON, INC. - MINNESOTA

20860 KENBRIDGE COURT, SUITE 100
LAKEVILLE, MINNESOTA 55044

I HEREBY CERTIFY THAT THIS PLAN WAS PREPARED BY ME OR UNDER MY DIRECT SUPERVISION AND THAT I AM A DULY LICENSED PROFESSIONAL ENGINEER UNDER THE LAWS OF THE STATE OF MINNESOTA

FRANCIS D. HAGEN

DATE: 05/24/22 LICENSE NO. 17716

OAK CREEK

CHASKA, MN

Westwood

Phone (952) 937-5150 12701 Whitewater Drive, Suite #300
Fax (952) 937-5822 Minnetonka, MN 55343
Toll Free (888) 937-5150 westwoodps.com

Westwood Professional Services, Inc.

GRADING DRAINAGE & EROSION CONTROL

PROJECT NUMBER: 0024429.00

SHEET NUMBER: 3 OF 19

DATE: 05/24/22

© 2022 Westwood Professional Services, Inc.

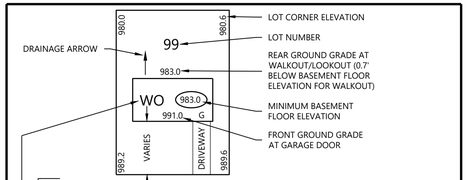

R = RAMBLER, GRADED FOR 8.2' OF DIFFERENCE FROM BASEMENT FLOOR ELEVATION TO FRONT GROUND GRADE AT GARAGE DOOR.

R(1) = RAMBLER, GRADED FOR 7.5' OF DIFFERENCE FROM BASEMENT FLOOR ELEVATION TO FRONT GROUND GRADE AT GARAGE DOOR.

LO = FULL BASEMENT LOOKOUT GRADED FOR 5.0' OF DIFFERENCE FROM THE REAR GROUND GRADE AT THE LOOKOUT TO THE FRONT GROUND GRADE AT THE GARAGE DOOR.

WO = FULL BASEMENT WALKOUT, GRADED FOR 8.2' OF DIFFERENCE FROM THE REAR GROUND GRADE AT THE WALKOUT TO FRONT GROUND AT GARAGE DOOR.

NOTE:
1. THE NUMBER IN THE PARENTHESIS INDICATES THE NUMBER OF BLOCKS THAT THE GARAGE IS DROPPED. EACH BLOCK=8".

CUSTOM — INDICATES A CUSTOM HOUSE PAD WHICH HAS NOT BEEN COMPLETELY GRADED OR PREPARED TO PROPOSED GRADE. ELEVATIONS AND HOUSE STYLES SHOWN ARE ENGINEERS SUGGESTED DESIGN FOR CUSTOM LOTS AND SHOULD BE VERIFIED WITH THE DEVELOPER.

Westwood	TYPICAL LOT	LAST REVISED: 12/20/21
		GD25A

CHICAGO, MILWAUKEE, ST. PAUL AND PACIFIC RAILWAY
OAK CREEK DRIVE
OAK CREEK COURT
OAK CREEK PASS
SOPHIA DRIVE
OUTLOT B
OAK CREEK
HOME BUILDER TO CONSTRUCT RETAINING WALL AS NEEDED DURING HOME CONSTRUCTION TO MAINTAIN PROPER DRAINAGE
POND & FILT BASIN 1
NWL = 912.0
OUTLET = 912.8
HWL=916.8
EOF=917.1
SEE SHEET 8 FOR DETAIL
WATER COURSE 1
EX. HWL=812.5
PROP. HWL=912.0
OUTLET EL.=907.0
7,237 SF NON-JURISDICTIONAL WATER COURSE IMPACT
POND 3
OUTLET = 910.0
NWL=910.0
HWL=911.2
EOF=911.2
1,856 SF WETLAND IMPACT
ST-102 SOFT TO 10.2
STA=14+03.20
STA=13+27.35
STA=13+83.24
STA=16+31.54
STA=13+83.42
16+36.79
18+74.88
HP 16+39.64 ELEV 938.11
HP 15+51.60 ELEV 941.00
HP 23+47.89 ELEV 926.59
LO 933.8 942.0
LO 933.8 942.0
LO 933.8 942.0

© 2022 Westwood Professional Services, Inc.

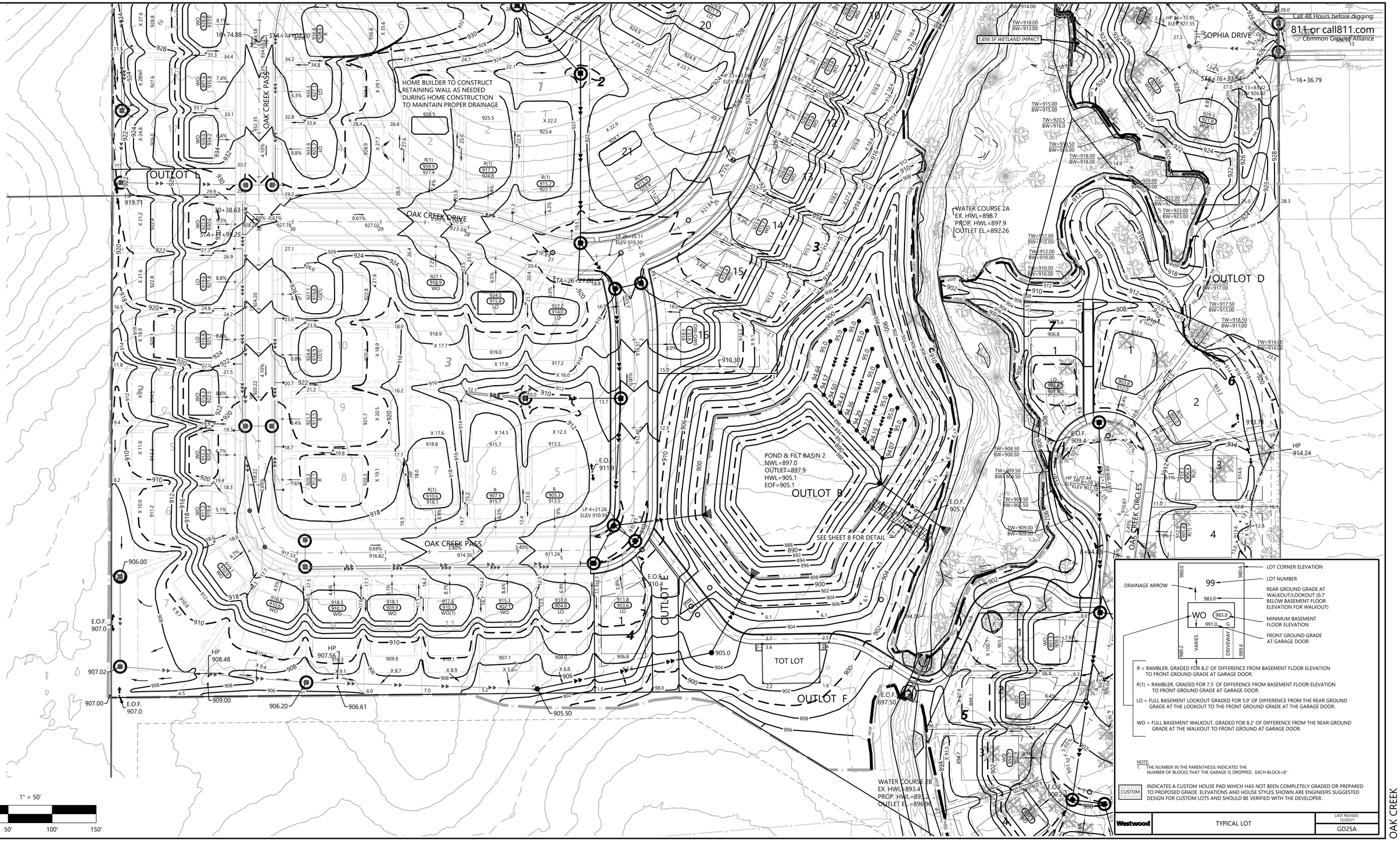

N:\0024429.00\DWG\CIVIL\FINAL\FINAL GRADING\0024429C GDF01.DWG

OAK CREEK

DESIGNED:	FDH II
CHECKED:	FDH II
DRAWN:	FDH III
HORIZONTAL SCALE:	50'
VERTICAL SCALE:	10' OR 5'

INITIAL ISSUE: 04/22/2022
REVISIONS:
1 05/24/22 CITY COMMENTS
2 . .
3 . .
4 . .
5 . .

PREPARED FOR:

DR HORTON, INC. - MINNESOTA

20860 KENBRIDGE COURT, SUITE 100
LAKEVILLE, MINNESOTA 55044

I HEREBY CERTIFY THAT THIS PLAN WAS PREPARED BY ME OR UNDER MY DIRECT SUPERVISION AND THAT I AM A DULY LICENSED PROFESSIONAL ENGINEER UNDER THE LAWS OF THE STATE OF MINNESOTA

FRANCIS D. HAGEN

DATE: 05/24/22 LICENSE NO. 17716

OAK CREEK

CHASKA, MN

Westwood

Phone (952) 937-5150
Fax (952) 937-5822
Toll Free (888) 937-5150

12701 Whitewater Drive, Suite #300
Minnetonka, MN 55343
westwoodps.com

Westwood Professional Services, Inc.

GRADING DRAINAGE & EROSION CONTROL

SHEET NUMBER: 5 OF 19

PROJECT NUMBER: 0024429.00

DATE: 05/24/22

© 2022 Westwood Professional Services, Inc.

Call 48 Hours before digging:
811 or call811.com
Common Ground Alliance

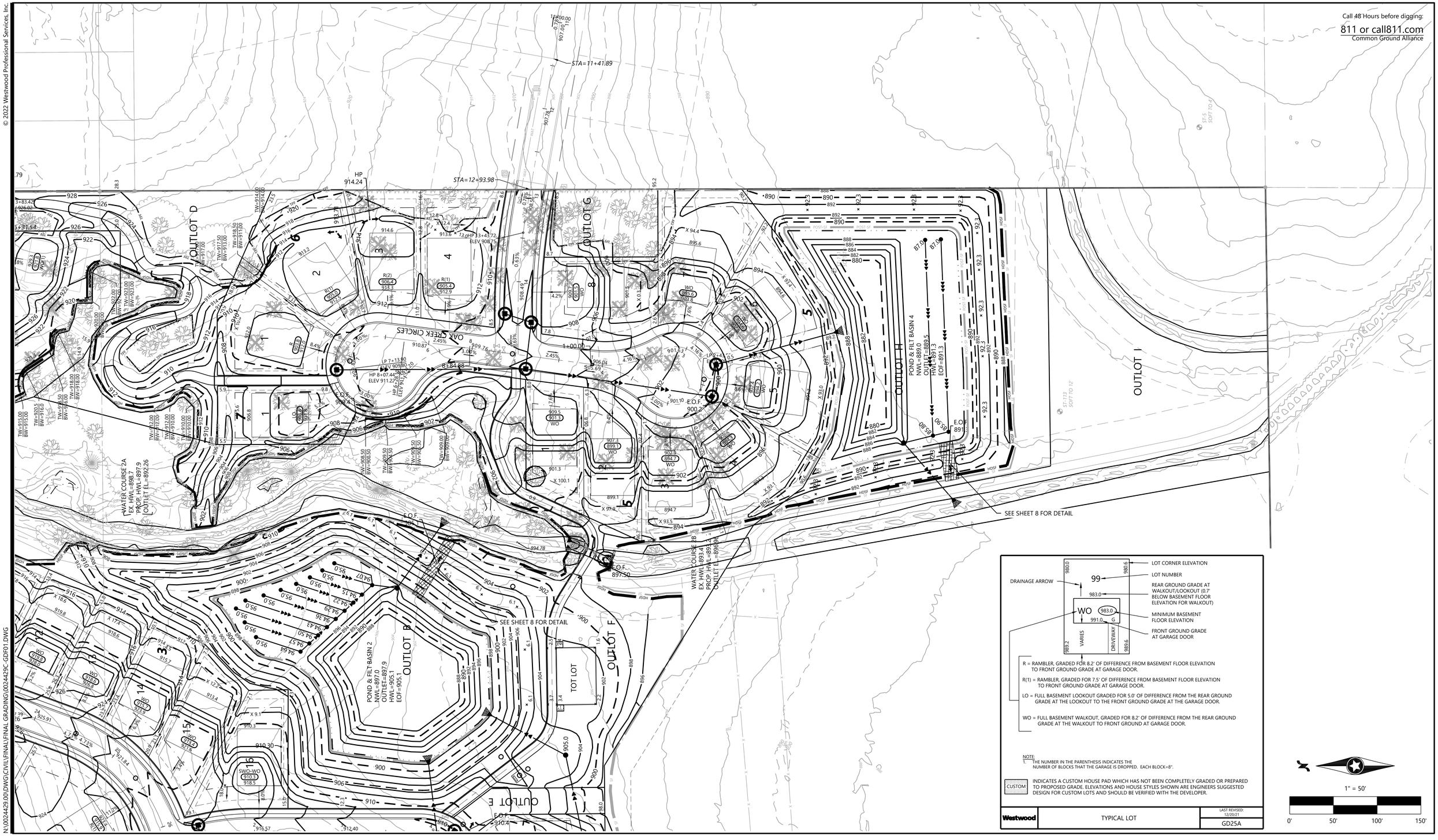

1" = 50'
0' 50' 100' 150'

N:\0024429.00\DWG\CIVIL\FINAL GRADING\0024429C-GDF01.DWG

DESIGNED:	FDH II
CHECKED:	FDH II
DRAWN:	FDH III
HORIZONTAL SCALE:	50'
VERTICAL SCALE:	10' OR 5'

INITIAL ISSUE: 04/22/2022
REVISIONS:

1	05/24/22	CITY COMMENTS
2	.	.
3	.	.
4	.	.
5	.	.

PREPARED FOR:

DR HORTON, INC. - MINNESOTA
20860 KENBRIDGE COURT, SUITE 100
LAKEVILLE, MINNESOTA 55044

I HEREBY CERTIFY THAT THIS PLAN WAS PREPARED BY ME OR UNDER MY DIRECT SUPERVISION AND THAT I AM A DULY LICENSED PROFESSIONAL ENGINEER UNDER THE LAWS OF THE STATE OF MINNESOTA
FRANCIS D. HAGEN
DATE: 05/24/22 LICENSE NO. 17716

OAK CREEK
CHASKA, MN

Westwood
Phone (952) 937-5150 12701 Whitewater Drive, Suite #300
Fax (952) 937-5822 Minnetonka, MN 55343
Toll Free (888) 937-5150 westwoodps.com
Westwood Professional Services, Inc.

GRADING DRAINAGE & EROSION CONTROL

PROJECT NUMBER: 0024429.00

SHEET NUMBER: 6 OF 19
DATE: 05/24/22

© 2022 Westwood Professional Services, Inc.

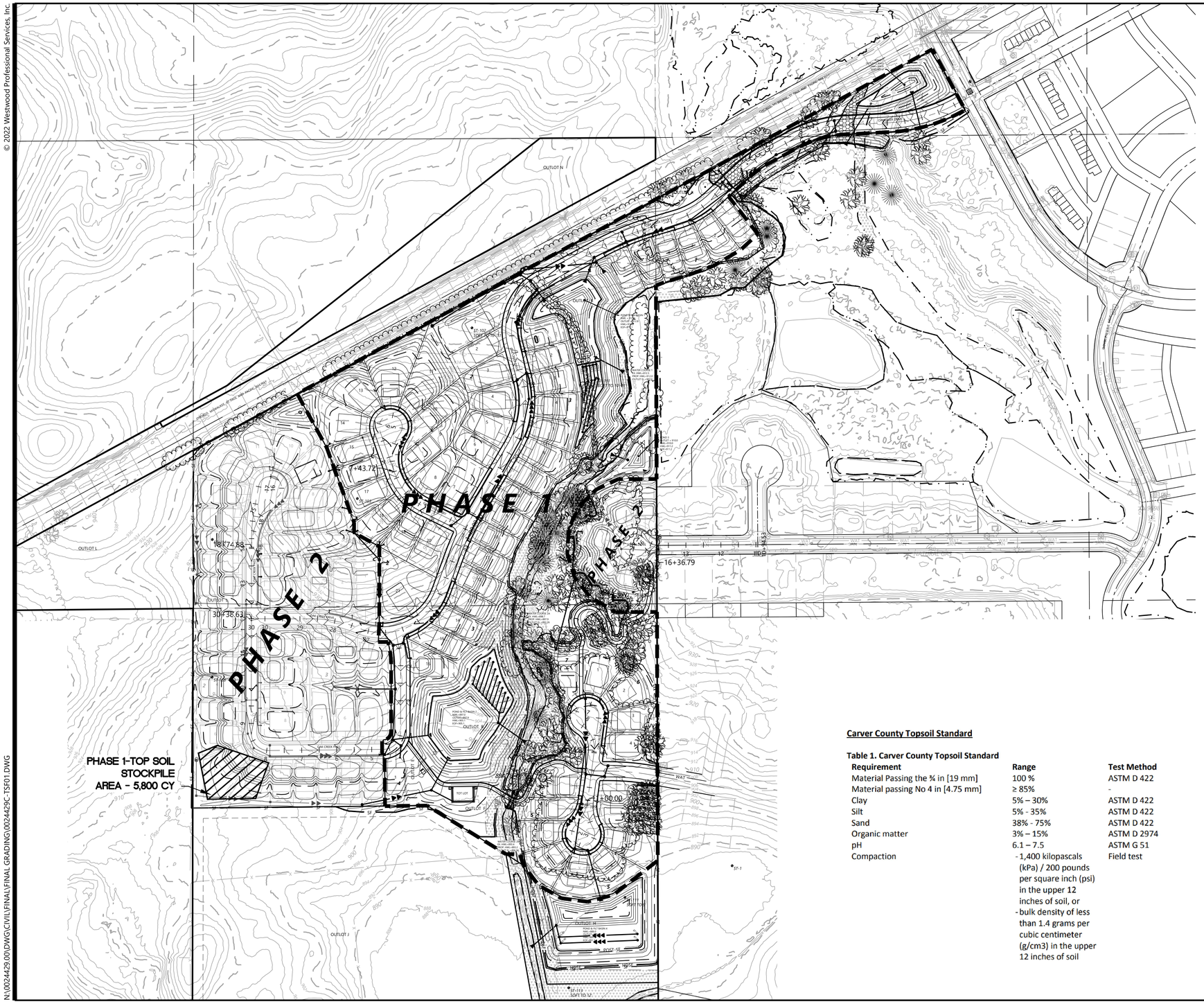
PHASE 1
PHASE 2
PHASE 2
PHASE 1-TOP SOIL
STOCKPILE
AREA - 5,800 CY
OUTLOT N
OUTLOT L
OUTLOT J
OUTLOT K
OUTLOT A
OUTLOT B
OUTLOT C
OUTLOT D
OUTLOT E
OUTLOT F
OUTLOT G
OUTLOT H
OUTLOT I
OUTLOT M
OUTLOT O
OUTLOT P
OUTLOT Q
OUTLOT R
OUTLOT S
OUTLOT T
OUTLOT U
OUTLOT V
OUTLOT W
OUTLOT X
OUTLOT Y
OUTLOT Z
OUTLOT AA
OUTLOT BB
OUTLOT CC
OUTLOT DD
OUTLOT EE
OUTLOT FF
OUTLOT GG
OUTLOT HH
OUTLOT II
OUTLOT JJ
OUTLOT KK
OUTLOT LL
OUTLOT MM
OUTLOT NN
OUTLOT OO
OUTLOT PP
OUTLOT QQ
OUTLOT RR
OUTLOT SS
OUTLOT TT
OUTLOT UU
OUTLOT VV
OUTLOT WW
OUTLOT XX
OUTLOT YY
OUTLOT ZZ
OUTLOT AAA
OUTLOT BBB
OUTLOT CCC
OUTLOT DDD
OUTLOT EEE
OUTLOT FFF
OUTLOT GGG
OUTLOT HHH
OUTLOT III
OUTLOT JJJ
OUTLOT KKK
OUTLOT LLL
OUTLOT MMM
OUTLOT NNN
OUTLOT OOO
OUTLOT PPP
OUTLOT QQQ
OUTLOT RRR
OUTLOT SSS
OUTLOT TTT
OUTLOT UUU
OUTLOT VVV
OUTLOT WWW
OUTLOT XXX
OUTLOT YYY
OUTLOT ZZZ
OUTLOT AAAA
OUTLOT BBBB
OUTLOT CCCC
OUTLOT DDDD
OUTLOT EEEE
OUTLOT FFFF
OUTLOT GGGG
OUTLOT HHHH
OUTLOT IIII
OUTLOT JJJJ
OUTLOT KKKK
OUTLOT LLLL
OUTLOT MMMM
OUTLOT NNNN
OUTLOT OOOO
OUTLOT PPPP
OUTLOT QQQQ
OUTLOT RRRR
OUTLOT SSSS
OUTLOT TTTT
OUTLOT UUUU
OUTLOT VVVV
OUTLOT WWWW
OUTLOT XXXX
OUTLOT YYYY
OUTLOT ZZZZ
OUTLOT AAAAA
OUTLOT BBBBB
OUTLOT CCCCC
OUTLOT DDDDD
OUTLOT EEEEE
OUTLOT FFFFF
OUTLOT GGGGG
OUTLOT HHHHH
OUTLOT IIIII
OUTLOT JJJJJ
OUTLOT KKKKK
OUTLOT LLLLL
OUTLOT MMMMM
OUTLOT NNNNN
OUTLOT OOOOO
OUTLOT PPPPP
OUTLOT QQQQQ
OUTLOT RRRRR
OUTLOT SSSSS
OUTLOT TTTTT
OUTLOT UUUUU
OUTLOT VVVVV
OUTLOT WWWWW
OUTLOT XXXXX
OUTLOT YYYYY
OUTLOT ZZZZZ
OUTLOT AAAAAA
OUTLOT BBBBBB
OUTLOT CCCCCC
OUTLOT DDDDDD
OUTLOT EEEEEE
OUTLOT FFFFFF
OUTLOT GGGGGG
OUTLOT HHHHHH
OUTLOT IIIIII
OUTLOT JJJJJJ
OUTLOT KKKKKK
OUTLOT LLLLLL
OUTLOT MMMMMM
OUTLOT NNNNNN
OUTLOT OOOOOO
OUTLOT PPPPPP
OUTLOT QQQQQQ
OUTLOT RRRRRR
OUTLOT SSSSSS
OUTLOT TTTTTT
OUTLOT UUUUUU
OUTLOT VVVVVV
OUTLOT WWWWWW
OUTLOT XXXXXX
OUTLOT YYYYYY
OUTLOT ZZZZZZ
OUTLOT AAAAAAA
OUTLOT BBBBBBB
OUTLOT CCCCCCC
OUTLOT DDDDDDD
OUTLOT EEEEEEE
OUTLOT FFFFFFF
OUTLOT GGGGGGG
OUTLOT HHHHHHH
OUTLOT IIIIIII
OUTLOT JJJJJJJ
OUTLOT KKKKKKK
OUTLOT LLLLLLL
OUTLOT MMMMMMM
OUTLOT NNNNNNN
OUTLOT OOOOOOO
OUTLOT PPPPPPP
OUTLOT QQQQQQQ
OUTLOT RRRRRRR
OUTLOT SSSSSSS
OUTLOT TTTTTTT
OUTLOT UUUUUUU
OUTLOT VVVVVVV
OUTLOT WWWWWWW
OUTLOT XXXXXXX
OUTLOT YYYYYYY
OUTLOT ZZZZZZZ
OUTLOT AAAAAAAA
OUTLOT BBBBBBBB
OUTLOT CCCCCCCC
OUTLOT DDDDDDDD
OUTLOT EEEEEEEE
OUTLOT FFFFFFFF
OUTLOT GGGGGGGG
OUTLOT HHHHHHHH
OUTLOT IIIIIIII
OUTLOT JJJJJJJJ
OUTLOT KKKKKKKK
OUTLOT LLLLLLLL
OUTLOT MMMMMMMM
OUTLOT NNNNNNNN
OUTLOT OOOOOOOO
OUTLOT PPPPPPPP
OUTLOT QQQQQQQQ
OUTLOT RRRRRRRR
OUTLOT SSSSSSSS
OUTLOT TTTTTTTT
OUTLOT UUUUUUUU
OUTLOT VVVVVVVV
OUTLOT WWWWWWWW
OUTLOT XXXXXXXX
OUTLOT YYYYYYYY
OUTLOT ZZZZZZZZ
OUTLOT AAAAAAAAA
OUTLOT BBBBBBBBB
OUTLOT CCCCCCCCC
OUTLOT DDDDDDDDD
OUTLOT EEEEEEEEE
OUTLOT FFFFFFFFF
OUTLOT GGGGGGGGG
OUTLOT HHHHHHHHH
OUTLOT IIIIIIIII
OUTLOT JJJJJJJJJ
OUTLOT KKKKKKKKK
OUTLOT LLLLLLLLL
OUTLOT MMMMMMMMM
OUTLOT NNNNNNNNN
OUTLOT OOOOOOOOO
OUTLOT PPPPPPPPP
OUTLOT QQQQQQQQQ
OUTLOT RRRRRRRRR
OUTLOT SSSSSSSSS
OUTLOT TTTTTTTTT
OUTLOT UUUUUUUUU
OUTLOT VVVVVVVVV
OUTLOT WWWWWWWWW
OUTLOT XXXXXXXXX
OUTLOT YYYYYYYYY
OUTLOT ZZZZZZZZZ
OUTLOT AAAAAAAAAA
OUTLOT BBBBBBBBBB
OUTLOT CCCCCCCCCC
OUTLOT DDDDDDDDDD
OUTLOT EEEEEEEEEE
OUTLOT FFFFFFFFFF
OUTLOT GGGGGGGGGG
OUTLOT HHHHHHHHHH
OUTLOT IIIIIIIIII
OUTLOT JJJJJJJJJJ
OUTLOT KKKKKKKKKK
OUTLOT LLLLLLLLLL
OUTLOT MMMMMMMMMM
OUTLOT NNNNNNNNNN
OUTLOT OOOOOOOOOO
OUTLOT PPPPPPPPPP
OUTLOT QQQQQQQQQQ
OUTLOT RRRRRRRRRR
OUTLOT SSSSSSSSSS
OUTLOT TTTTTTTTTT
OUTLOT UUUUUUUUUU
OUTLOT VVVVVVVVVV
OUTLOT WWWWWWWWWW
OUTLOT XXXXXXXXXX
OUTLOT YYYYYYYYYY
OUTLOT ZZZZZZZZZZ
OUTLOT AAAAAAAAAAA
OUTLOT BBBBBBBBBBB
OUTLOT CCCCCCCCCCC
OUTLOT DDDDDDDDDDD
OUTLOT EEEEEEEEEEE
OUTLOT FFFFFFFFFFF
OUTLOT GGGGGGGGGGG
OUTLOT HHHHHHHHHHH
OUTLOT IIIIIIIIIII
OUTLOT JJJJJJJJJJJ
OUTLOT KKKKKKKKKKK
OUTLOT LLLLLLLLLLL
OUTLOT MMMMMMMMMMM
OUTLOT NNNNNNNNNNN
OUTLOT OOOOOOOOOOO
OUTLOT PPPPPPPPPPP
OUTLOT QQQQQQQQQQQ
OUTLOT RRRRRRRRRRR
OUTLOT SSSSSSSSSSS
OUTLOT TTTTTTTTTTT
OUTLOT UUUUUUUUUUU
OUTLOT VVVVVVVVVVV
OUTLOT WWWWWWWWWWW
OUTLOT XXXXXXXXXXX
OUTLOT YYYYYYYYYYY
OUTLOT ZZZZZZZZZZZ
OUTLOT AAAAAAAAAAAA
OUTLOT BBBBBBBBBBBB
OUTLOT CCCCCCCCCCCC
OUTLOT DDDDDDDDDDDD
OUTLOT EEEEEEEEEEEE
OUTLOT FFFFFFFFFFFF
OUTLOT GGGGGGGGGGGG
OUTLOT HHHHHHHHHHHH
OUTLOT IIIIIIIIIIII
OUTLOT JJJJJJJJJJJJ
OUTLOT KKKKKKKKKKKK
OUTLOT LLLLLLLLLLLL
OUTLOT MMMMMMMMMMMM
OUTLOT NNNNNNNNNNNN
OUTLOT OOOOOOOOOOOO
OUTLOT PPPPPPPPPPPP
OUTLOT QQQQQQQQQQQQ
OUTLOT RRRRRRRRRRRR
OUTLOT SSSSSSSSSSSS
OUTLOT TTTTTTTTTTTT
OUTLOT UUUUUUUUUUUU
OUTLOT VVVVVVVVVVVV
OUTLOT WWWWWWWWWWWW
OUTLOT XXXXXXXXXXXX
OUTLOT YYYYYYYYYYYY
OUTLOT ZZZZZZZZZZZZ
OUTLOT AAAAAAAAAAAAA
OUTLOT BBBBBBBBBBBBB
OUTLOT CCCCCCCCCCCCC
OUTLOT DDDDDDDDDDDDD
OUTLOT EEEEEEEEEEEEE
OUTLOT FFFFFFFFFFFFF
OUTLOT GGGGGGGGGGGGG
OUTLOT HHHHHHHHHHHHH
OUTLOT IIIIIIIIIIIII
OUTLOT JJJJJJJJJJJJJ
OUTLOT KKKKKKKKKKKKK
OUTLOT LLLLLLLLLLLLL
OUTLOT MMMMMMMMMMMMM
OUTLOT NNNNNNNNNNNNN
OUTLOT OOOOOOOOOOOOO
OUTLOT PPPPPPPPPPPPP
OUTLOT QQQQQQQQQQQQQ
OUTLOT RRRRRRRRRRRRR
OUTLOT SSSSSSSSSSSSS
OUTLOT TTTTTTTTTTTTT
OUTLOT UUUUUUUUUUUUU
OUTLOT VVVVVVVVVVVVV
OUTLOT WWWWWWWWWWWWW
OUTLOT XXXXXXXXXXXXX
OUTLOT YYYYYYYYYYYYY
OUTLOT ZZZZZZZZZZZZZ
OUTLOT AAAAAAAAAAAAAA
OUTLOT BBBBBBBBBBBBBB
OUTLOT CCCCCCCCCCCCCC
OUTLOT DDDDDDDDDDDDDD
OUTLOT EEEEEEEEEEEEEE
OUTLOT FFFFFFFFFFFFFF
OUTLOT GGGGGGGGGGGGGG
OUTLOT HHHHHHHHHHHHHH
OUTLOT IIIIIIIIIIIIII
OUTLOT JJJJJJJJJJJJJJ
OUTLOT KKKKKKKKKKKKKK
OUTLOT LLLLLLLLLLLLLL
OUTLOT MMMMMMMMMMMMMM
OUTLOT NNNNNNNNNNNNNN
OUTLOT OOOOOOOOOOOOOO
OUTLOT PPPPPPPPPPPPPP
OUTLOT QQQQQQQQQQQQQQ
OUTLOT RRRRRRRRRRRRRR
OUTLOT SSSSSSSSSSSSSS
OUTLOT TTTTTTTTTTTTTT
OUTLOT UUUUUUUUUUUUUU
OUTLOT VVVVVVVVVVVVVV
OUTLOT WWWWWWWWWWWWWW
OUTLOT XXXXXXXXXXXXXX
OUTLOT YYYYYYYYYYYYYY
OUTLOT ZZZZZZZZZZZZZZ
OUTLOT AAAAAAAAAAAAAAA
OUTLOT BBBBBBBBBBBBBBB
OUTLOT CCCCCCCCCCCCCCC
OUTLOT DDDDDDDDDDDDDDD
OUTLOT EEEEEEEEEEEEEEE
OUTLOT FFFFFFFFFFFFFFF
OUTLOT GGGGGGGGGGGGGGG
OUTLOT HHHHHHHHHHHHHHH
OUTLOT IIIIIIIIIIIIIII
OUTLOT JJJJJJJJJJJJJJJ
OUTLOT KKKKKKKKKKKKKKK
OUTLOT LLLLLLLLLLLLLLL
OUTLOT MMMMMMMMMMMMMMM
OUTLOT NNNNNNNNNNNNNNN
OUTLOT OOOOOOOOOOOOOOO
OUTLOT PPPPPPPPPPPPPPP
OUTLOT QQQQQQQQQQQQQQQ
OUTLOT RRRRRRRRRRRRRRR
OUTLOT SSSSSSSSSSSSSSS
OUTLOT TTTTTTTTTTTTTTT
OUTLOT UUUUUUUUUUUUUUU
OUTLOT VVVVVVVVVVVVVVV
OUTLOT WWWWWWWWWWWWWWW
OUTLOT XXXXXXXXXXXXXXX
OUTLOT YYYYYYYYYYYYYYY
OUTLOT ZZZZZZZZZZZZZZZ
OUTLOT AAAAAAAAAAAAAAAA
OUTLOT BBBBBBBBBBBBBBBB
OUTLOT CCCCCCCCCCCCCCCC
OUTLOT DDDDDDDDDDDDDDDD
OUTLOT EEEEEEEEEEEEEEEE
OUTLOT FFFFFFFFFFFFFFFF
OUTLOT GGGGGGGGGGGGGGGG
OUTLOT HHHHHHHHHHHHHHHH
OUTLOT IIIIIIIIIIIIIIII
OUTLOT JJJJJJJJJJJJJJJJ
OUTLOT KKKKKKKKKKKKKKKK
OUTLOT LLLLLLLLLLLLLLLL
OUTLOT MMMMMMMMMMMMMMMM
OUTLOT NNNNNNNNNNNNNNNN
OUTLOT OOOOOOOOOOOOOOOO
OUTLOT PPPPPPPPPPPPPPPP
OUTLOT QQQQQQQQQQQQQQQQ
OUTLOT RRRRRRRRRRRRRRRR
OUTLOT SSSSSSSSSSSSSSSS
OUTLOT TTTTTTTTTTTTTTTT
OUTLOT UUUUUUUUUUUUUUUU
OUTLOT VVVVVVVVVVVVVVVV
OUTLOT WWWWWWWWWWWWWWWW
OUTLOT XXXXXXXXXXXXXXXX
OUTLOT YYYYYYYYYYYYYYYY
OUTLOT ZZZZZZZZZZZZZZZZ
OUTLOT AAAAAAAAAAAAAAAAA
OUTLOT BBBBBBBBBBBBBBBBB
OUTLOT CCCCCCCCCCCCCCCCC
OUTLOT DDDDDDDDDDDDDDDDD
OUTLOT EEEEEEEEEEEEEEEEE
OUTLOT FFFFFFFFFFFFFFFFF
OUTLOT GGGGGGGGGGGGGGGGG
OUTLOT HHHHHHHHHHHHHHHHH
OUTLOT IIIIIIIIIIIIIIIII
OUTLOT JJJJJJJJJJJJJJJJJ
OUTLOT KKKKKKKKKKKKKKKKK
OUTLOT LLLLLLLLLLLLLLLLL
OUTLOT MMMMMMMMMMMMMMMMM
OUTLOT NNNNNNNNNNNNNNNNN
OUTLOT OOOOOOOOOOOOOOOOO
OUTLOT PPPPPPPPPPPPPPPPP
OUTLOT QQQQQQQQQQQQQQQQQ
OUTLOT RRRRRRRRRRRRRRRRR
OUTLOT SSSSSSSSSSSSSSSSS
OUTLOT TTTTTTTTTTTTTTTTT
OUTLOT UUUUUUUUUUUUUUUUU
OUTLOT VVVVVVVVVVVVVVVVV
OUTLOT WWWWWWWWWWWWWWWWW
OUTLOT XXXXXXXXXXXXXXXXX
OUTLOT YYYYYYYYYYYYYYYYY
OUTLOT ZZZZZZZZZZZZZZZZZ
OUTLOT AAAAAAAAAAAAAAAAAA
OUTLOT BBBBBBBBBBBBBBBBBB
OUTLOT CCCCCCCCCCCCCCCCCC
OUTLOT DDDDDDDDDDDDDDDDDD
OUTLOT EEEEEEEEEEEEEEEEEE
OUTLOT FFFFFFFFFFFFFFFFFF
OUTLOT GGGGGGGGGGGGGGGGGG
OUTLOT HHHHHHHHHHHHHHHHHH
OUTLOT IIIIIIIIIIIIIIIIII
OUTLOT JJJJJJJJJJJJJJJJJJ
OUTLOT KKKKKKKKKKKKKKKKKK
OUTLOT LLLLLLLLLLLLLLLLLL
OUTLOT MMMMMMMMMMMMMMMMMM
OUTLOT NNNNNNNNNNNNNNNNNN
OUTLOT OOOOOOOOOOOOOOOOOO
OUTLOT PPPPPPPPPPPPPPPPPP
OUTLOT QQQQQQQQQQQQQQQQQQ
OUTLOT RRRRRRRRRRRRRRRRRR
OUTLOT SSSSSSSSSSSSSSSSSS
OUTLOT TTTTTTTTTTTTTTTTTT
OUTLOT UUUUUUUUUUUUUUUUUU
OUTLOT VVVVVVVVVVVVVVVVVV
OUTLOT WWWWWWWWWWWWWWWWWW
OUTLOT XXXXXXXXXXXXXXXXXX
OUTLOT YYYYYYYYYYYYYYYYYY
OUTLOT ZZZZZZZZZZZZZZZZZZ
OUTLOT AAAAAAAAAAAAAAAAAAA
OUTLOT BBBBBBBBBBBBBBBBBBB
OUTLOT CCCCCCCCCCCCCCCCCCC
OUTLOT DDDDDDDDDDDDDDDDDDD
OUTLOT EEEEEEEEEEEEEEEEEEE
OUTLOT FFFFFFFFFFFFFFFFFFF
OUTLOT GGGGGGGGGGGGGGGGGGG
OUTLOT HHHHHHHHHHHHHHHHHHH
OUTLOT IIIIIIIIIIIIIIIIIII
OUTLOT JJJJJJJJJJJJJJJJJJJ
OUTLOT KKKKKKKKKKKKKKKKKKK
OUTLOT LLLLLLLLLLLLLLLLLLL
OUTLOT MMMMMMMMMMMMMMMMMMM
OUTLOT NNNNNNNNNNNNNNNNNNN
OUTLOT OOOOOOOOOOOOOOOOOOO
OUTLOT PPPPPPPPPPPPPPPPPPP
OUTLOT QQQQQQQQQQQQQQQQQQQ
OUTLOT RRRRRRRRRRRRRRRRRRR
OUTLOT SSSSSSSSSSSSSSSSSSS
OUTLOT TTTTTTTTTTTTTTTTTTT
OUTLOT UUUUUUUUUUUUUUUUUUU
OUTLOT VVVVVVVVVVVVVVVVVVV
OUTLOT WWWWWWWWWWWWWWWWWWW
OUTLOT XXXXXXXXXXXXXXXXXXX
OUTLOT YYYYYYYYYYYYYYYYYYY
OUTLOT ZZZZZZZZZZZZZZZZZZZ
OUTLOT AAAAAAAAAAAAAAAAAAAA
OUTLOT BBBBBBBBBBBBBBBBBBBB
OUTLOT CCCCCCCCCCCCCCCCCCCC
OUTLOT DDDDDDDDDDDDDDDDDDDD
OUTLOT EEEEEEEEEEEEEEEEEEEE
OUTLOT FFFFFFFFFFFFFFFFFFFF
OUTLOT GGGGGGGGGGGGGGGGGGGG
OUTLOT HHHHHHHHHHHHHHHHHHHH
OUTLOT IIIIIIIIIIIIIIIIIIII
OUTLOT JJJJJJJJJJJJJJJJJJJJ
OUTLOT KKKKKKKKKKKKKKKKKKKK
OUTLOT LLLLLLLLLLLLLLLLLLLL
OUTLOT MMMMMMMMMMMMMMMMMMMM
OUTLOT NNNNNNNNNNNNNNNNNNNN
OUTLOT OOOOOOOOOOOOOOOOOOOO
OUTLOT PPPPPPPPPPPPPPPPPPPP
OUTLOT QQQQQQQQQQQQQQQQQQQQ
OUTLOT RRRRRRRRRRRRRRRRRRRR
OUTLOT SSSSSSSSSSSSSSSSSSSS
OUTLOT TTTTTTTTTTTTTTTTTTTT
OUTLOT UUUUUUUUUUUUUUUUUUUU
OUTLOT VVVVVVVVVVVVVVVVVVVV
OUTLOT WWWWWWWWWWWWWWWWWWWW
OUTLOT XXXXXXXXXXXXXXXXXXXX
OUTLOT YYYYYYYYYYYYYYYYYYYY
OUTLOT ZZZZZZZZZZZZZZZZZZZZ
OUTLOT AAAAAAAAAAAAAAAAAAAAA
OUTLOT BBBBBBBBBBBBBBBBBBBBB
OUTLOT CCCCCCCCCCCCCCCCCCCCC
OUTLOT DDDDDDDDDDDDDDDDDDDDD
OUTLOT EEEEEEEEEEEEEEEEEEEEE
OUTLOT FFFFFFFFFFFFFFFFFFFFF
OUTLOT GGGGGGGGGGGGGGGGGGGGG
OUTLOT HHHHHHHHHHHHHHHHHHHHH
OUTLOT IIIIIIIIIIIIIIIIIIIII
OUTLOT JJJJJJJJJJJJJJJJJJJJJ
OUTLOT KKKKKKKKKKKKKKKKKKKKK
OUTLOT LLLLLLLLLLLLLLLLLLLLL
OUTLOT MMMMMMMMMMMMMMMMMMMMM
OUTLOT NNNNNNNNNNNNNNNNNNNNN
OUTLOT OOOOOOOOOOOOOOOOOOOOO
OUTLOT PPPPPPPPPPPPPPPPPPPPP
OUTLOT QQQQQQQQQQQQQQQQQQQQQ
OUTLOT RRRRRRRRRRRRRRRRRRRRR
OUTLOT SSSSSSSSSSSSSSSSSSSSS
OUTLOT TTTTTTTTTTTTTTTTTTTTT
OUTLOT UUUUUUUUUUUUUUUUUUUUU
OUTLOT VVVVVVVVVVVVVVVVVVVVV
OUTLOT WWWWWWWWWWWWWWWWWWWWW
OUTLOT XXXXXXXXXXXXXXXXXXXXX
OUTLOT YYYYYYYYYYYYYYYYYYYYY
OUTLOT ZZZZZZZZZZZZZZZZZZZZZ
OUTLOT AAAAAAAAAAAAAAAAAAAAAA
OUTLOT BBBBBBBBBBBBBBBBBBBBBB
OUTLOT CCCCCCCCCCCCCCCCCCCCCC
OUTLOT DDDDDDDDDDDDDDDDDDDDDD
OUTLOT EEEEEEEEEEEEEEEEEEEEEE
OUTLOT FFFFFFFFFFFFFFFFFFFFFF
OUTLOT GGGGGGGGGGGGGGGGGGGGGG
OUTLOT HHHHHHHHHHHHHHHHHHHHHH
OUTLOT IIIIIIIIIIIIIIIIIIIIII
OUTLOT JJJJJJJJJJJJJJJJJJJJJJ
OUTLOT KKKKKKKKKKKKKKKKKKKKKK
OUTLOT LLLLLLLLLLLLLLLLLLLLLL
OUTLOT MMMMMMMMMMMMMMMMMMMMMM
OUTLOT NNNNNNNNNNNNNNNNNNNNNN
OUTLOT OOOOOOOOOOOOOOOOOOOOOO
OUTLOT PPPPPPPPPPPPPPPPPPPPPP
OUTLOT QQQQQQQQQQQQQQQQQQQQQQ
OUTLOT RRRRRRRRRRRRRRRRRRRRRR
OUTLOT SSSSSSSSSSSSSSSSSSSSSS
OUTLOT TTTTTTTTTTTTTTTTTTTTTT
OUTLOT UUUUUUUUUUUUUUUUUUUUUU
OUTLOT VVVVVVVVVVVVVVVVVVVVVV
OUTLOT WWWWWWWWWWWWWWWWWWWWWW
OUTLOT XXXXXXXXXXXXXXXXXXXXXX
OUTLOT YYYYYYYYYYYYYYYYYYYYYY
OUTLOT ZZZZZZZZZZZZZZZZZZZZZZ
OUTLOT AAAAAAAAAAAAAAAAAAAAAAA
OUTLOT BBBBBBBBBBBBBBBBBBBBBBB
OUTLOT CCCCCCCCCCCCCCCCCCCCCCC
OUTLOT DDDDDDDDDDDDDDDDDDDDDDD
OUTLOT EEEEEEEEEEEEEEEEEEEEEEE
OUTLOT FFFFFFFFFFFFFFFFFFFFFFF
OUTLOT GGGGGGGGGGGGGGGGGGGGGGG
OUTLOT HHHHHHHHHHHHHHHHHHHHHHH
OUTLOT IIIIIIIIIIIIIIIIIIIIIII
OUTLOT JJJJJJJJJJJJJJJJJJJJJJJ
OUTLOT KKKKKKKKKKKKKKKKKKKKKKK
OUTLOT LLLLLLLLLLLLLLLLLLLLLLL
OUTLOT MMMMMMMMMMMMMMMMMMMMMMM
OUTLOT NNNNNNNNNNNNNNNNNNNNNNN
OUTLOT OOOOOOOOOOOOOOOOOOOOOOO
OUTLOT PPPPPPPPPPPPPPPPPPPPPPP
OUTLOT QQQQQQQQQQQQQQQQQQQQQQQ
OUTLOT RRRRRRRRRRRRRRRRRRRRRRR
OUTLOT SSSSSSSSSSSSSSSSSSSSSSS
OUTLOT TTTTTTTTTTTTTTTTTTTTTTT
OUTLOT UUUUUUUUUUUUUUUUUUUUUUU
OUTLOT VVVVVVVVVVVVVVVVVVVVVVV
OUTLOT WWWWWWWWWWWWWWWWWWWWWWW
OUTLOT XXXXXXXXXXXXXXXXXXXXXXX
OUTLOT YYYYYYYYYYYYYYYYYYYYYYY
OUTLOT ZZZZZZZZZZZZZZZZZZZZZZZ
OUTLOT AAAAAAAAAAAAAAAAAAAAAAAA
OUTLOT BBBBBBBBBBBBBBBBBBBBBBBB
OUTLOT CCCCCCCCCCCCCCCCCCCCCCCC
OUTLOT DDDDDDDDDDDDDDDDDDDDDDDD
OUTLOT EEEEEEEEEEEEEEEEEEEEEEEE
OUTLOT FFFFFFFFFFFFFFFFFFFFFFFF
OUTLOT GGGGGGGGGGGGGGGGGGGGGGGG
OUTLOT HHHHHHHHHHHHHHHHHHHHHHHH
OUTLOT IIIIIIIIIIIIIIIIIIIIIIII
OUTLOT JJJJJJJJJJJJJJJJJJJJJJJJ
OUTLOT KKKKKKKKKKKKKKKKKKKKKKKK
OUTLOT LLLLLLLLLLLLLLLLLLLLLLLL
OUTLOT MMMMMMMMMMMMMMMMMMMMMMMM
OUTLOT NNNNNNNNNNNNNNNNNNNNNNNN
OUTLOT OOOOOOOOOOOOOOOOOOOOOOOO
OUTLOT PPPPPPPPPPPPPPPPPPPPPPPP
OUTLOT QQQQQQQQQQQQQQQQQQQQQQQQ
OUTLOT RRRRRRRRRRRRRRRRRRRRRRRR
OUTLOT SSSSSSSSSSSSSSSSSSSSSSSS
OUTLOT TTTTTTTTTTTTTTTTTTTTTTTT
OUTLOT UUUUUUUUUUUUUUUUUUUUUUUU
OUTLOT VVVVVVVVVVVVVVVVVVVVVVVV
OUTLOT WWWWWWWWWWWWWWWWWWWWWWWW
OUTLOT XXXXXXXXXXXXXXXXXXXXXXXX
OUTLOT YYYYYYYYYYYYYYYYYYYYYYYY
OUTLOT ZZZZZZZZZZZZZZZZZZZZZZZZ
OUTLOT AAAAAAAAAAAAAAAAAAAAAAAAA
OUTLOT BBBBBBBBBBBBBBBBBBBBBBBBB
OUTLOT CCCCCCCCCCCCCCCCCCCCCCCCC
OUTLOT DDDDDDDDDDDDDDDDDDDDDDDDD
OUTLOT EEEEEEEEEEEEEEEEEEEEEEEEE
OUTLOT FFFFFFFFFFFFFFFFFFFFFFFFF
OUTLOT GGGGGGGGGGGGGGGGGGGGGGGGG
OUTLOT HHHHHHHHHHHHHHHHHHHHHHHHH
OUTLOT IIIIIIIIIIIIIIIIIIIIIIIII
OUTLOT JJJJJJJJJJJJJJJJJJJJJJJJJ
OUTLOT KKKKKKKKKKKKKKKKKKKKKKKKK
OUTLOT LLLLLLLLLLLLLLLLLLLLLLLLL
OUTLOT MMMMMMMMMMMMMMMMMMMMMMMMM
OUTLOT NNNNNNNNNNNNNNNNNNNNNNNNN
OUTLOT OOOOOOOOOOOOOOOOOOOOOOOOO
OUTLOT PPPPPPPPPPPPPPPPPPPPPPPPP
OUTLOT QQQQQQQQQQQQQQQQQQQQQQQQQ
OUTLOT RRRRRRRRRRRRRRRRRRRRRRRRR
OUTLOT SSSSSSSSSSSSSSSSSSSSSSSSS
OUTLOT TTTTTTTTTTTTTTTTTTTTTTTTT
OUTLOT UUUUUUUUUUUUUUUUUUUUUUUUU
OUTLOT VVVVVVVVVVVVVVVVVVVVVVVVV
OUTLOT WWWWWWWWWWWWWWWWWWWWWWWWW
OUTLOT XXXXXXXXXXXXXXXXXXXXXXXXX
OUTLOT YYYYYYYYYYYYYYYYYYYYYYYYY
OUTLOT ZZZZZZZZZZZZZZZZZZZZZZZZZ
OUTLOT AAAAAAAAAAAAAAAAAAAAAAAAAA
OUTLOT BBBBBBBBBBBBBBBBBBBBBBBBBB
OUTLOT CCCCCCCCCCCCCCCCCCCCCCCCCC
OUTLOT DDDDDDDDDDDDDDDDDDDDDDDDDD
OUTLOT EEEEEEEEEEEEEEEEEEEEEEEEEE
OUTLOT FFFFFFFFFFFFFFFFFFFFFFFFFF
OUTLOT GGGGGGGGGGGGGGGGGGGGGGGGGG
OUTLOT HHHHHHHHHHHHHHHHHHHHHHHHHH
OUTLOT IIIIIIIIIIIIIIIIIIIIIIIIII
OUTLOT JJJJJJJJJJJJJJJJJJJJJJJJJJ
OUTLOT KKKKKKKKKKKKKKKKKKKKKKKKKK
OUTLOT LLLLLLLLLLLLLLLLLLLLLLLLLL
OUTLOT MMMMMMMMMMMMMMMMMMMMMMMMMM
OUTLOT NNNNNNNNNNNNNNNNNNNNNNNNNN
OUTLOT OOOOOOOOOOOOOOOOOOOOOOOOOO
OUTLOT PPPPPPPPPPPPPPPPPPPPPPPPPP
OUTLOT QQQQQQQQQQQQQQQQQQQQQQQQQQ
OUTLOT RRRRRRRRRRRRRRRRRRRRRRRRRR
OUTLOT SSSSSSSSSSSSSSSSSSSSSSSSSS
OUTLOT TTTTTTTTTTTTTTTTTTTTTTTTTT
OUTLOT UUUUUUUUUUUUUUUUUUUUUUUUUU
OUTLOT VVVVVVVVVVVVVVVVVVVVVVVVVV
OUTLOT WWWWWWWWWWWWWWWWWWWWWWWWWW
OUTLOT XXXXXXXXXXXXXXXXXXXXXXXXXX
OUTLOT YYYYYYYYYYYYYYYYYYYYYYYYYY
OUTLOT ZZZZZZZZZZZZZZZZZZZZZZZZZZ
OUTLOT AAAAAAAAAAAAAAAAAAAAAAAAAAA
OUTLOT BBBBBBBBBBBBBBBBBBBBBBBBBBB
OUTLOT CCCCCCCCCCCCCCCCCCCCCCCCCCC
OUTLOT DDDDDDDDDDDDDDDDDDDDDDDDDDD
OUTLOT EEEEEEEEEEEEEEEEEEEEEEEEEEE
OUTLOT FFFFFFFFFFFFFFFFFFFFFFFFFFF
OUTLOT GGGGGGGGGGGGGGGGGGGGGGGGGGG
OUTLOT HHHHHHHHHHHHHHHHHHHHHHHHHHH
OUTLOT IIIIIIIIIIIIIIIIIIIIIIIIIII
OUTLOT JJJJJJJJJJJJJJJJJJJJJJJJJJJ
OUTLOT KKKKKKKKKKKKKKKKKKKKKKKKKKK
OUTLOT LLLLLLLLLLLLLLLLLLLLLLLLLLL
OUTLOT MMMMMMMMMMMMMMMMMMMMMMMMMMM
OUTLOT NNNNNNNNNNNNNNNNNNNNNNNNNNN
OUTLOT OOOOOOOOOOOOOOOOOOOOOOOOOOO
OUTLOT PPPPPPPPPPPPPPPPPPPPPPPPPPP
OUTLOT QQQQQQQQQQQQQQQQQQQQQQQQQQQ
OUTLOT RRRRRRRRRRRRRRRRRRRRRRRRRRR
OUTLOT SSSSSSSSSSSSSSSSSSSSSSSSSSS
OUTLOT TTTTTTTTTTTTTTTTTTTTTTTTTTT
OUTLOT UUUUUUUUUUUUUUUUUUUUUUUUUUU
OUTLOT VVVVVVVVVVVVVVVVVVVVVVVVVVV
OUTLOT WWWWWWWWWWWWWWWWWWWWWWWWWWW
OUTLOT XXXXXXXXXXXXXXXXXXXXXXXXXXX
OUTLOT YYYYYYYYYYYYYYYYYYYYYYYYYYY
OUTLOT ZZZZZZZZZZZZZZZZZZZZZZZZZZZ
OUTLOT AAAAAAAAAAAAAAAAAAAAAAAAAAAA
OUTLOT BBBBBBBBBBBBBBBBBBBBBBBBBBBB
OUTLOT CCCCCCCCCCCCCCCCCCCCCCCCCCCC
OUTLOT DDDDDDDDDDDDDDDDDDDDDDDDDDDD
OUTLOT EEEEEEEEEEEEEEEEEEEEEEEEEEEE
OUTLOT FFFFFFFFFFFFFFFFFFFFFFFFFFFF
OUTLOT GGGGGGGGGGGGGGGGGGGGGGGGGGGG
OUTLOT HHHHHHHHHHHHHHHHHHHHHHHHHHHH
OUTLOT IIIIIIIIIIIIIIIIIIIIIIIIIIII
OUTLOT JJJJJJJJJJJJJJJJJJJJJJJJJJJJ
OUTLOT KKKKKKKKKKKKKKKKKKKKKKKKKKKK
OUTLOT LLLLLLLLLLLLLLLLLLLLLLLLLLLL
OUTLOT MMMMMMMMMMMMMMMMMMMMMMMMMMMM
OUTLOT NNNNNNNNNNNNNNNNNNNNNNNNNNNN
OUTLOT OOOOOOOOOOOOOOOOOOOOOOOOOOOO
OUTLOT PPPPPPPPPPPPPPPPPPPPPPPPPPPP
OUTLOT QQQQQQQQQQQQQQQQQQQQQQQQQQQQ
OUTLOT RRRRRRRRRRRRRRRRRRRRRRRRRRRR
OUTLOT SSSSSSSSSSSSSSSSSSSSSSSSSSSS
OUTLOT TTTTTTTTTTTTTTTTTTTTTTTTTTTT
OUTLOT UUUUUUUUUUUUUUUUUUUUUUUUUUUU
OUTLOT VVVVVVVVVVVVVVVVVVVVVVVVVVVV
OUTLOT WWWWWWWWWWWWWWWWWWWWWWWWWWWW
OUTLOT XXXXXXXXXXXXXXXXXXXXXXXXXXXX
OUTLOT YYYYYYYYYYYYYYYYYYYYYYYYYYYY
OUTLOT ZZZZZZZZZZZZZZZZZZZZZZZZZZZZ
OUTLOT AAAAAAAAAAAAAAAAAAAAAAAAAAAAA
OUTLOT BBBBBBBBBBBBBBBBBBBBBBBBBBBBB
OUTLOT CCCCCCCCCCCCCCCCCCCCCCCCC

© 2022 Westwood Professional Services, Inc.

Call 48 Hours before digging:

811 or call811.com
Common Ground Alliance

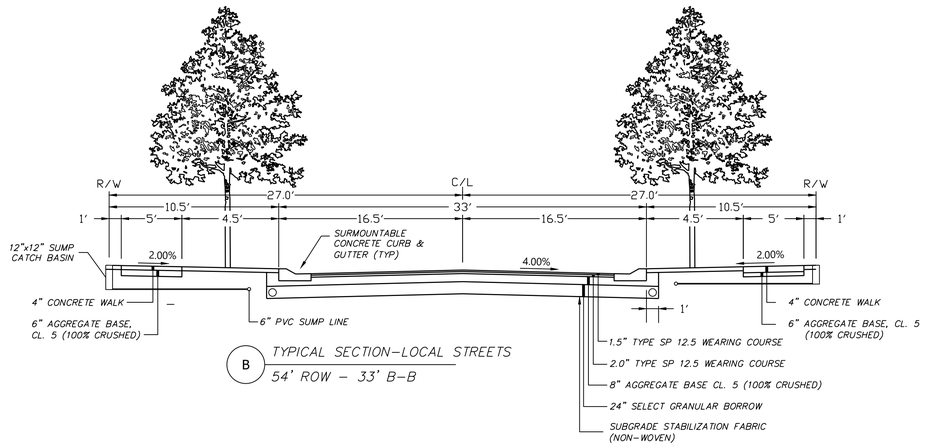

B TYPICAL SECTION–LOCAL STREETS
54' ROW – 33' B-B

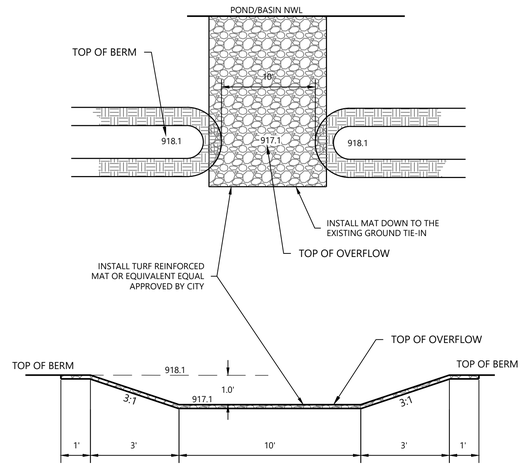

SECTION

POND 1 OVERFLOW

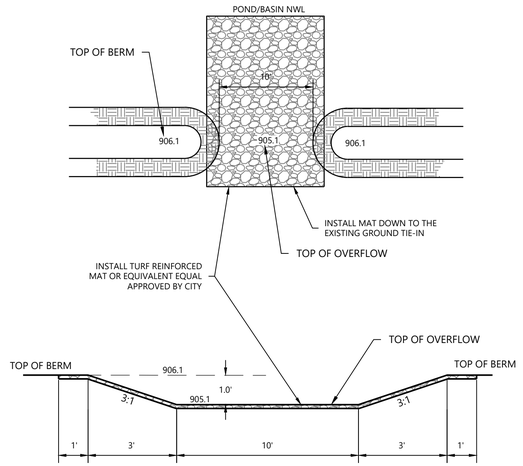

SECTION

POND 2 OVERFLOW

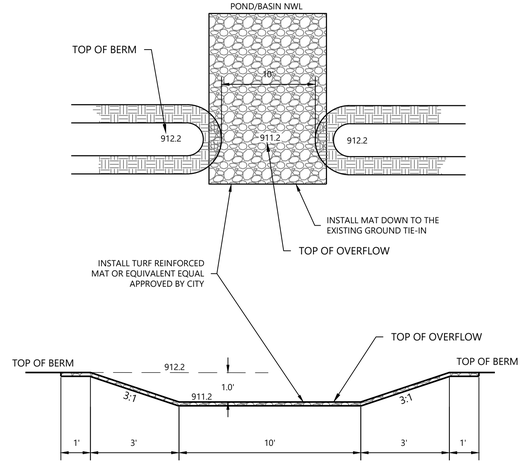

SECTION

POND 3 OVERFLOW

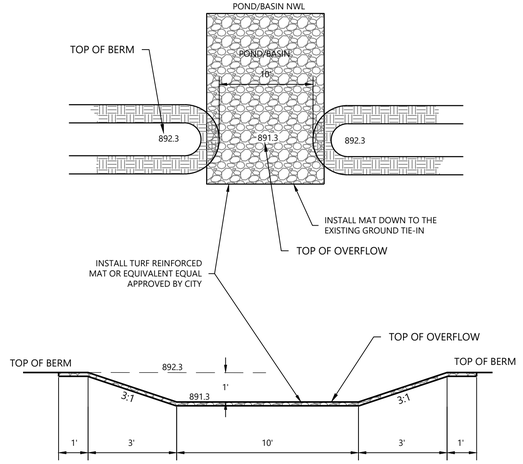

SECTION

POND 4 OVERFLOW

N:\0024429.00\DWG\CIVIL\FINAL\FINAL GRADING\0024429C-DTF03.DWG

OAK CREEK

DESIGNED: FDH II
CHECKED: FDH II
DRAWN: FDH III
HORIZONTAL SCALE: ###
VERTICAL SCALE: ### OR ##

INITIAL ISSUE: 04/22/2022
REVISIONS:
1 05/24/22 CITY COMMENTS 07/14/21 RECORD PLANS
2 . .
3 . .
4 . .
5 . .

PREPARED FOR:

DR HORTON, INC. - MINNESOTA
20860 KENBRIDGE COURT, SUITE 100
LAKEVILLE, MINNESOTA 55044

I HEREBY CERTIFY THAT THIS PLAN WAS PREPARED BY ME OR UNDER MY DIRECT SUPERVISION AND THAT I AM A DULY LICENSED PROFESSIONAL ENGINEER UNDER THE LAWS OF THE STATE OF MINNESOTA
FRANCIS D. HAGEN
DATE: 05/24/22 LICENSE NO. 17716

OAK CREEK
CHASKA, MN

Westwood
Phone (952) 937-5150 12701 Whitewater Drive, Suite #300
Fax (952) 937-5822 Minnetonka, MN 55343
Toll Free (888) 937-5150 westwoodps.com
Westwood Professional Services, Inc.

TYPICAL STREET SECTIONS
POND OVERFLOW DETAILS

PROJECT NUMBER: 0024429.00

SHEET NUMBER: 8 OF 19
DATE: 05/24/22

© 2022 Westwood Professional Services, Inc.

Call 48 Hours before digging:
811 or call811.com
Common Ground Alliance

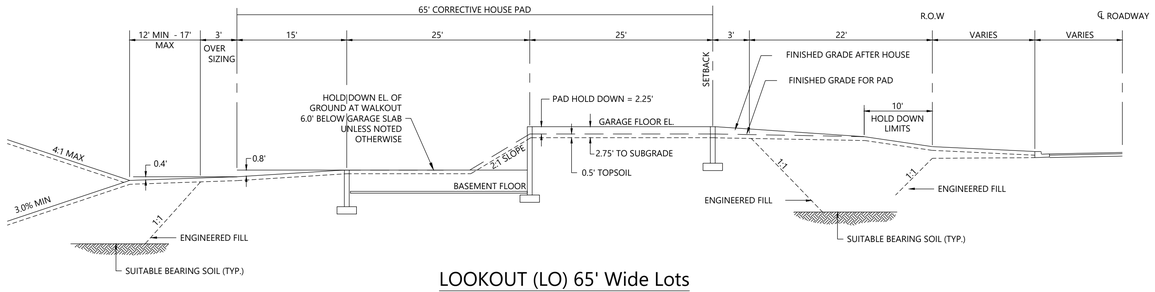

LOOKOUT (LO) 65' Wide Lots

N.T.S.

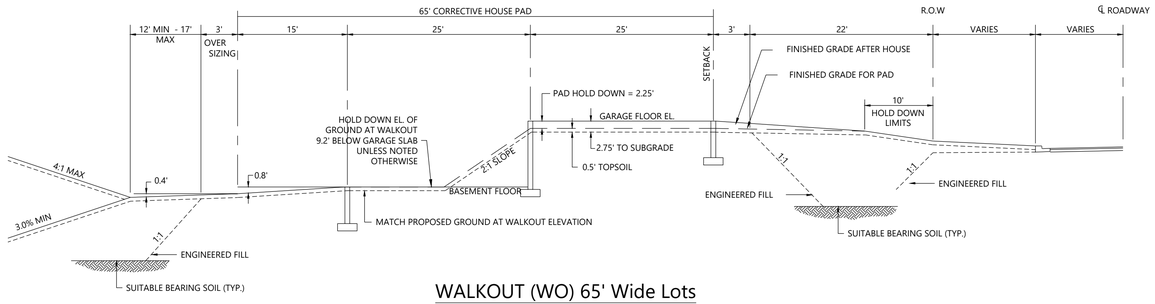

WALKOUT (WO) 65' Wide Lots

N.T.S.

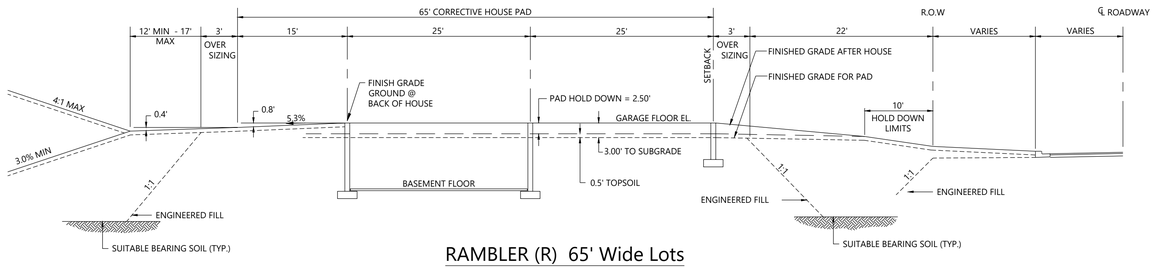

RAMBLER (R) 65' Wide Lots

N.T.S.

N:\0024429.00\DWG\CIVIL\FINAL\FINAL GRADING\0024429C_DTF03.DWG

OAK CREEK

DESIGNED:	FDH II
CHECKED:	FDH II
DRAWN:	FDH III
HORIZONTAL SCALE:	###
VERTICAL SCALE:	### OR ##

INITIAL ISSUE: 04/22/2022

REVISIONS:

1	05/24/22	CITY COMMENTS	07/14/21 RECORD PLANS
2	.	.	
3	.	.	
4	.	.	
5	.	.	

PREPARED FOR:

DR HORTON, INC. - MINNESOTA
20860 KENBRIDGE COURT, SUITE 100
LAKEVILLE, MINNESOTA 55044

I HEREBY CERTIFY THAT THIS PLAN WAS PREPARED BY ME OR UNDER MY DIRECT SUPERVISION AND THAT I AM A DULY LICENSED PROFESSIONAL ENGINEER UNDER THE LAWS OF THE STATE OF MINNESOTA

DATE: 05/24/22 LICENSE NO. 17716

OAK CREEK
CHASKA, MN

Westwood
Phone (952) 937-5150 12701 Whitewater Drive, Suite #300
Fax (952) 937-5822 Minnetonka, MN 55343
Toll Free (888) 937-5150 westwoodps.com
Westwood Professional Services, Inc.

TYPICAL LOT SECTIONS

PROJECT NUMBER: 0024429.00

SHEET NUMBER: 9 OF 19

DATE: 05/24/22

© 2022 Westwood Professional Services, Inc.

Call 48 Hours before digging:
811 or call811.com
Common Ground Alliance

OAK CREEK DRIVE

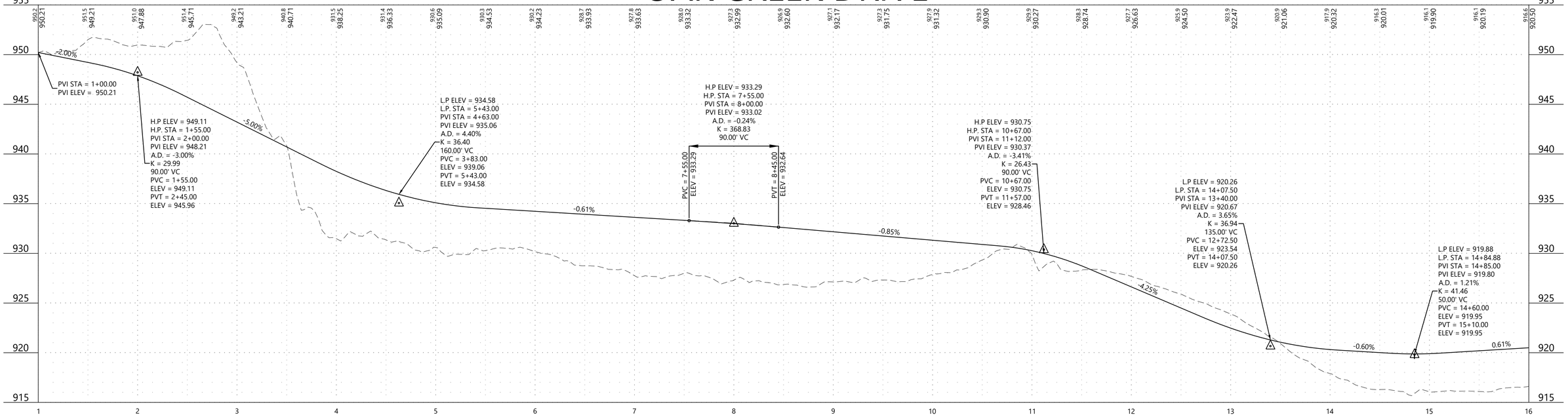

OAK CREEK DRIVE

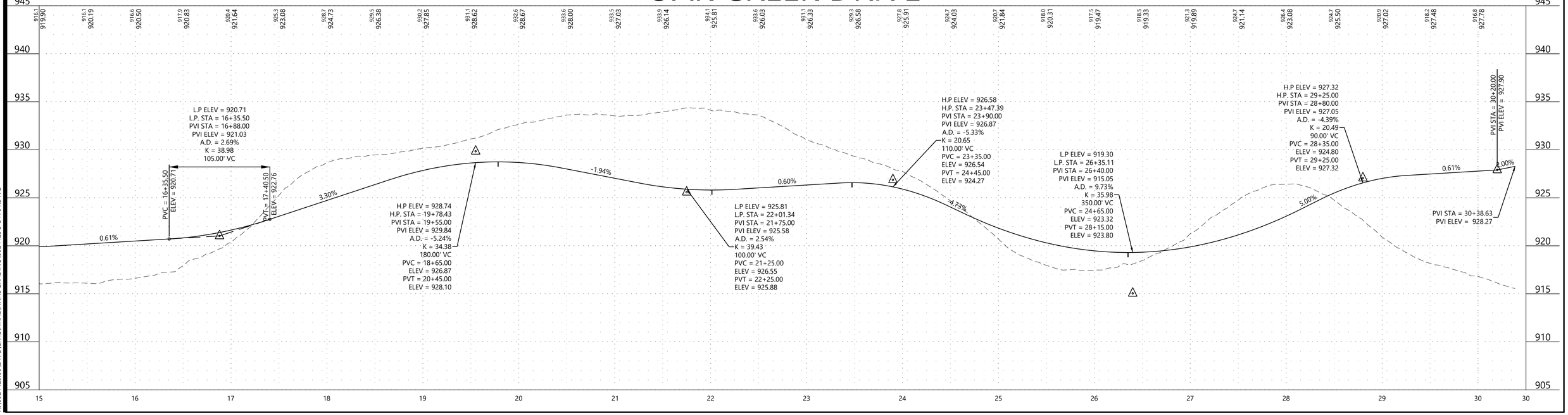

N:\0024429.00\DWG\CIVIL\FINAL\FINAL GRADING\0024429C-DTF01.DWG

OAK CREEK

DESIGNED:	FDH II
CHECKED:	FDH II
DRAWN:	FDH III
HORIZONTAL SCALE:	50'
VERTICAL SCALE:	10' OR 5'

INITIAL ISSUE: 04/22/2022
REVISIONS:
1 05/24/22 CITY COMMENTS
2 . .
3 . .
4 . .

PREPARED FOR:

DR HORTON, INC. - MINNESOTA
20860 KENBRIDGE COURT, SUITE 100
LAKEVILLE, MINNESOTA 55044

I HEREBY CERTIFY THAT THIS PLAN WAS PREPARED BY ME OR UNDER MY DIRECT SUPERVISION AND THAT I AM A DULY LICENSED PROFESSIONAL ENGINEER UNDER THE LAWS OF THE STATE OF MINNESOTA.
FRANCIS D. HAGEN II
DATE: 05/24/22 LICENSE NO. 17716

OAK CREEK
CHASKA, MN

Westwood
Phone (952) 937-5150 12701 Whitewater Drive, Suite #300
Fax (952) 937-5822 Minnetonka, MN 55343
Toll Free (888) 937-5150 westwoodps.com
Westwood Professional Services, Inc.

STREET PROFILES

SHEET NUMBER: 10 OF 19
PROJECT NUMBER: 0024429.00 DATE: 05/24/22

© 2022 Westwood Professional Services, Inc.

Call 48 Hours before digging:
811 or call811.com
Common Ground Alliance

OAK CREEK PASS

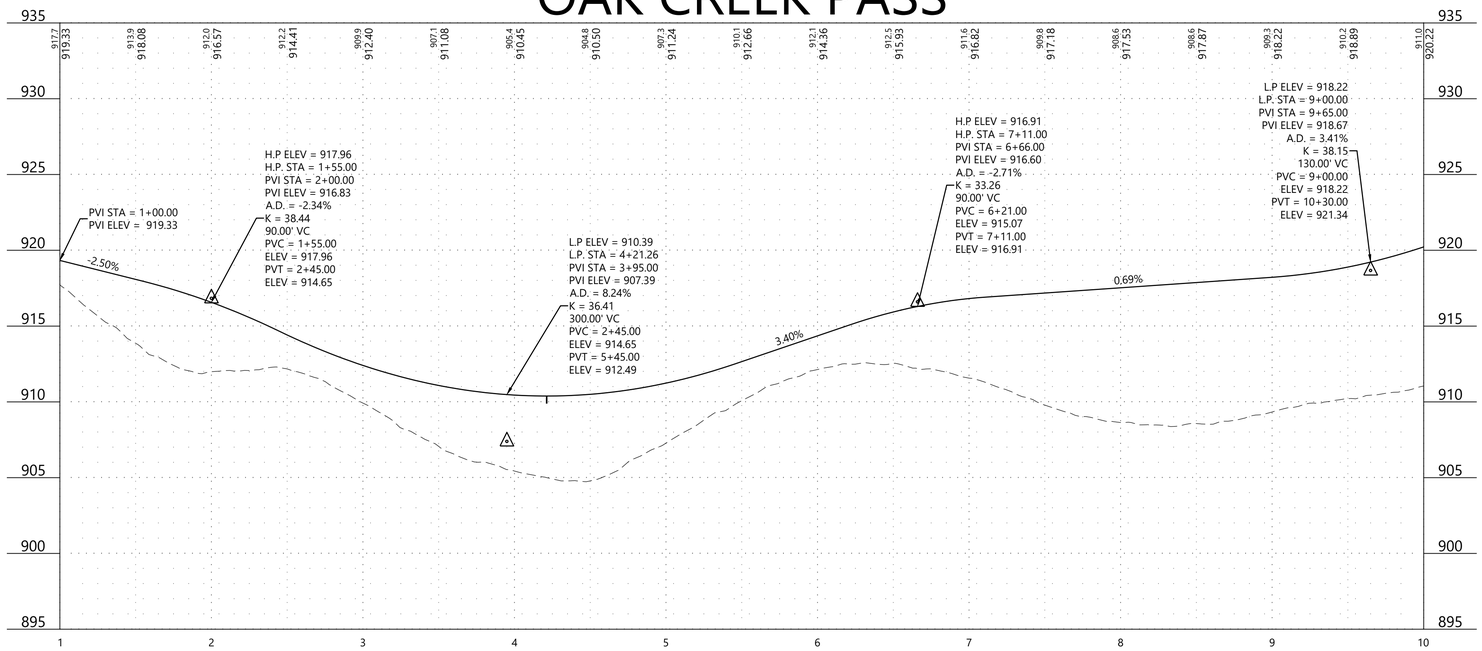

OAK CREEK PASS

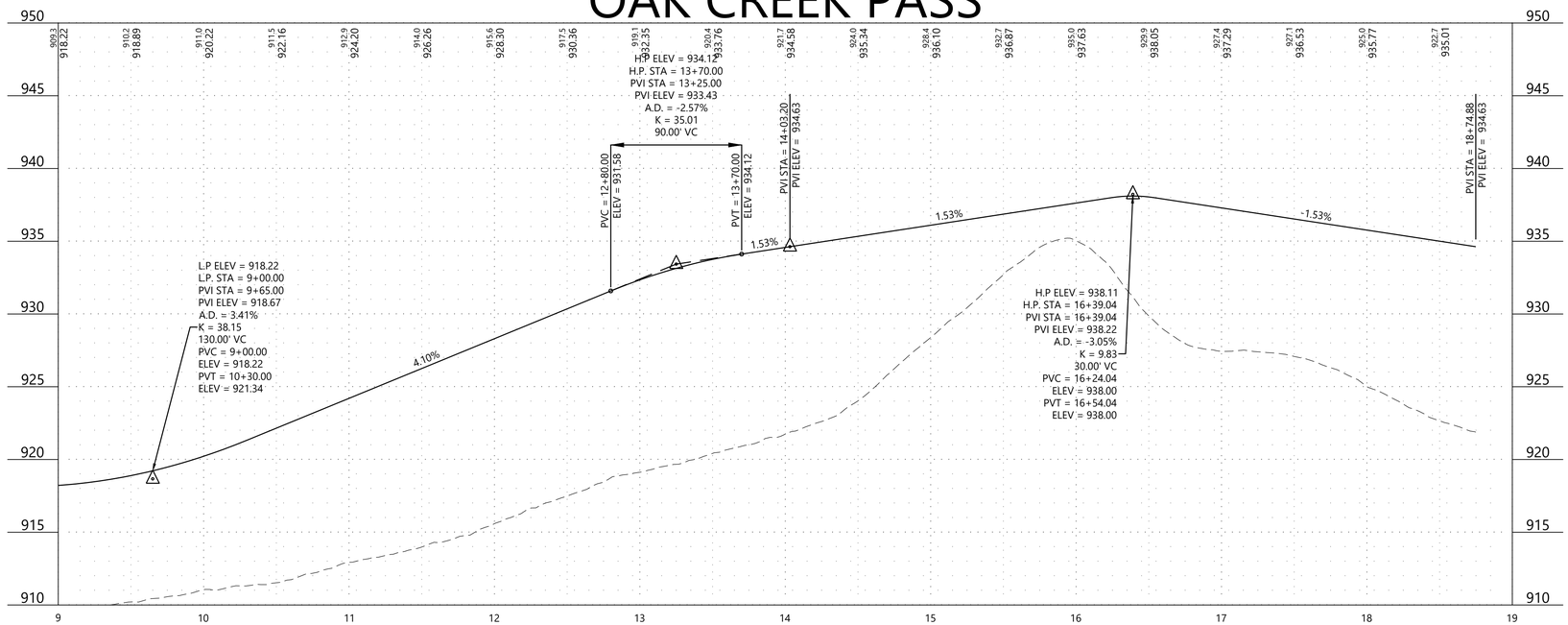

N:\0024429.00\DWG\CIVIL\FINAL\FINAL GRADING\0024429C-DTF01.DWG

OAK CREEK

DESIGNED:	FDH II
CHECKED:	FDH II
DRAWN:	FDH III
HORIZONTAL SCALE:	50'
VERTICAL SCALE:	10' OR 5'

INITIAL ISSUE: 04/22/2022
REVISIONS:
1 05/24/22 CITY COMMENTS
2 . .
3 . .
4 . .
5 . .

PREPARED FOR:

DR HORTON, INC. - MINNESOTA

20860 KENBRIDGE COURT, SUITE 100
LAKEVILLE, MINNESOTA 55044

I HEREBY CERTIFY THAT THIS PLAN WAS PREPARED BY ME OR UNDER MY DIRECT SUPERVISION AND THAT I AM A DULY LICENSED PROFESSIONAL ENGINEER UNDER THE LAWS OF THE STATE OF MINNESOTA

FRANCIS D. HAGEN
DATE: 05/24/22 LICENSE NO. 17716

OAK CREEK

CHASKA, MN

Westwood

Phone (952) 937-5150 12701 Whitewater Drive, Suite #300
Fax (952) 937-5822 Minnetonka, MN 55343
Toll Free (888) 937-5150 westwoodps.com

Westwood Professional Services, Inc.

STREET PROFILES

PROJECT NUMBER: 0024429.00

SHEET NUMBER: 11 OF 19

DATE: 05/24/22

© 2022 Westwood Professional Services, Inc.

Call 48 Hours before digging:
811 or call811.com
Common Ground Alliance

OAK CREEK COURT

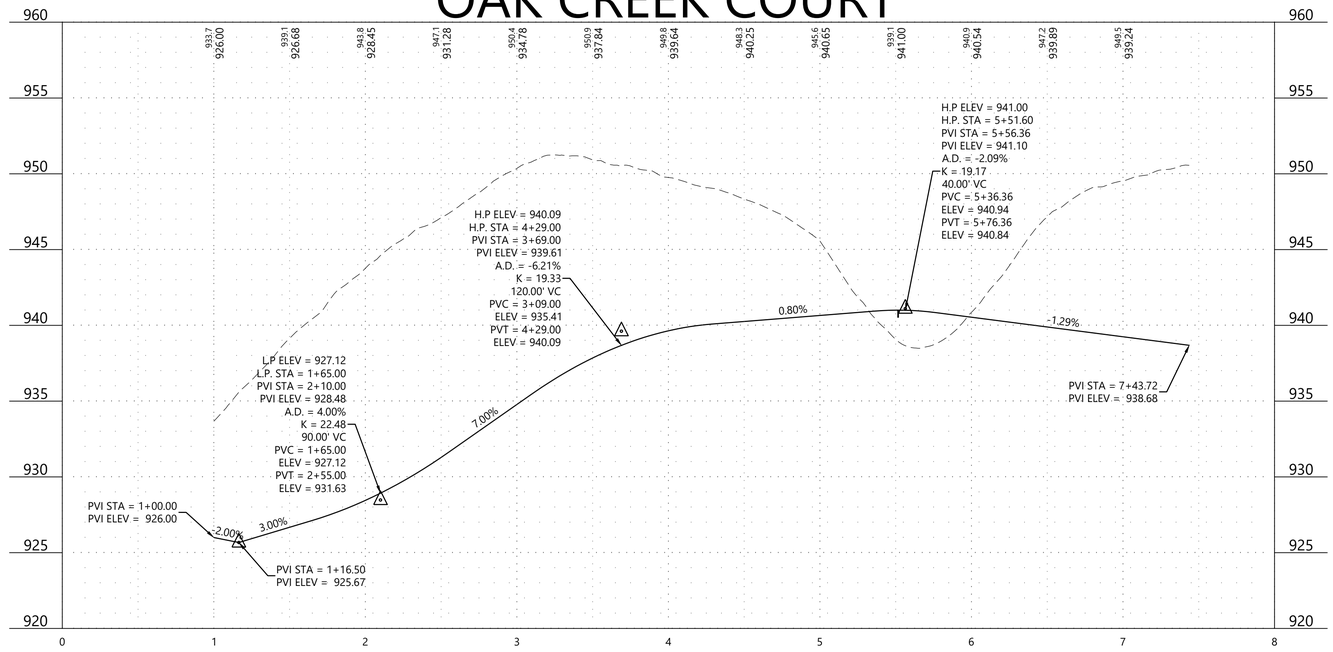

SOPHIA DRIVE

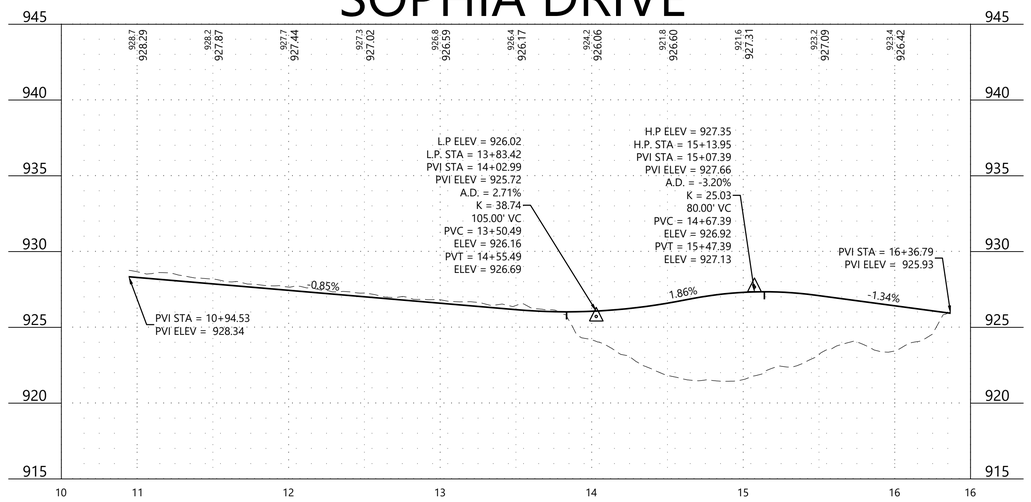

CLOVER PRESERVE LANE

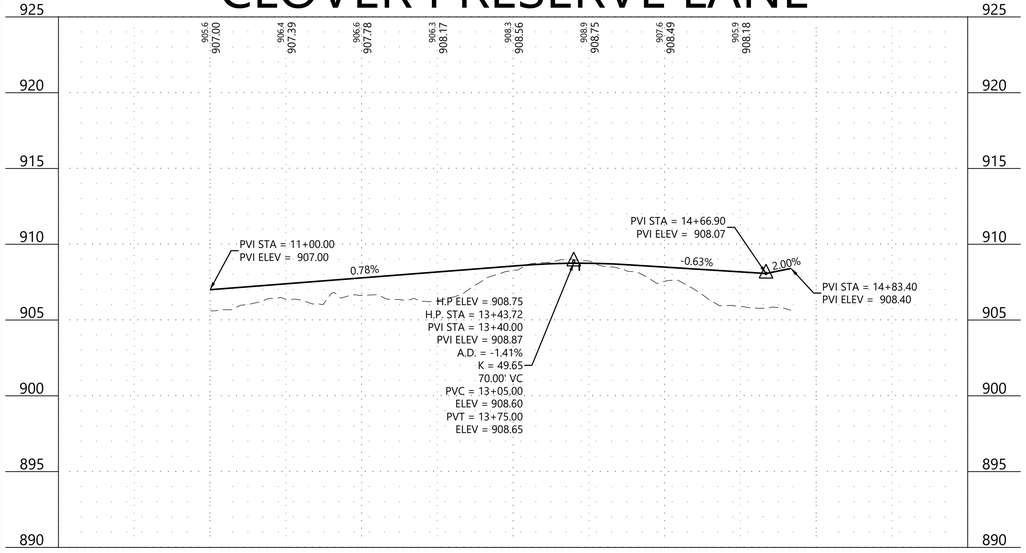

OAK CREEK CIRCLES

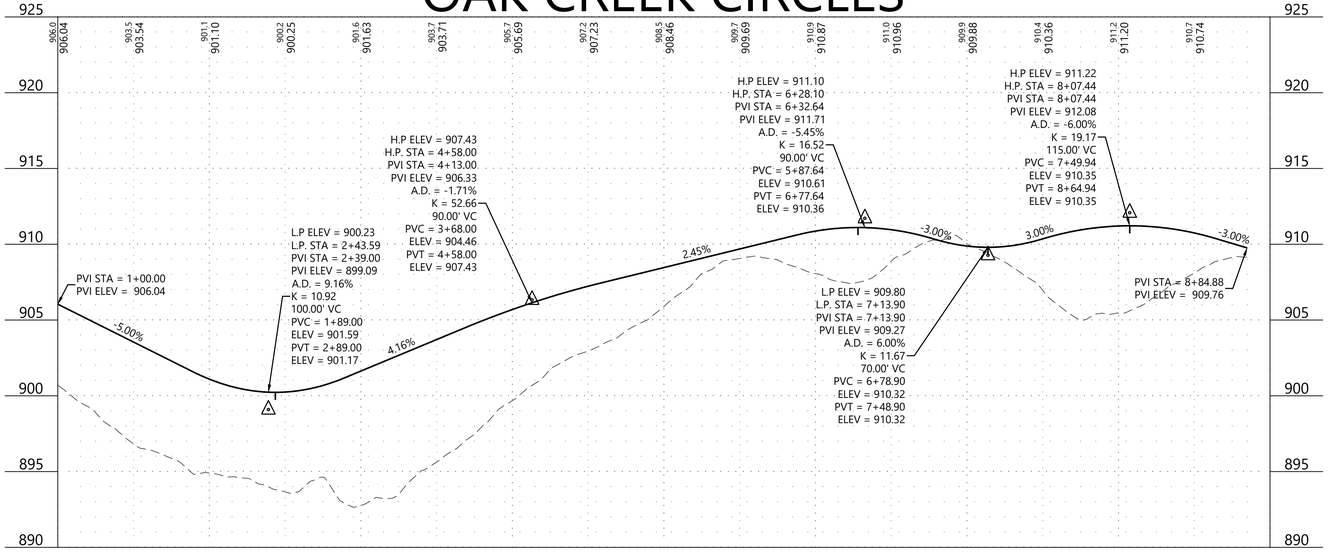

N:\0024429.00\DWG\CIVIL\FINAL GRADING\0024429C-DTF01.DWG

OAK CREEK

DESIGNED:	FDH II
CHECKED:	FDH II
DRAWN:	FDH III
HORIZONTAL SCALE:	50'
VERTICAL SCALE:	10' OR 5'

INITIAL ISSUE: 04/22/2022
REVISIONS:
1 05/24/22 CITY COMMENTS
2 . .
3 . .
4 . .
5 . .

PREPARED FOR:

DR HORTON, INC. - MINNESOTA
20860 KENBRIDGE COURT, SUITE 100
LAKEVILLE, MINNESOTA 55044

I HEREBY CERTIFY THAT THIS PLAN WAS PREPARED BY ME OR UNDER MY DIRECT SUPERVISION AND THAT I AM A DULY LICENSED PROFESSIONAL ENGINEER UNDER THE LAWS OF THE STATE OF MINNESOTA

FRANCIS D. HAGEN
DATE: 05/24/22 LICENSE NO. 17716

OAK CREEK
CHASKA, MN

Westwood
Phone (952) 937-5150 12701 Whitewater Drive, Suite #300
Fax (952) 937-5822 Minnetonka, MN 55343
Toll Free (888) 937-5150 westwoodps.com
Westwood Professional Services, Inc.

STREET PROFILES

PROJECT NUMBER: 0024429.00

SHEET NUMBER: 12 OF 19

DATE: 05/24/22

© 2022 Westwood Professional Services, Inc.

Call 48 Hours before digging:
811 or call811.com
Common Ground Alliance

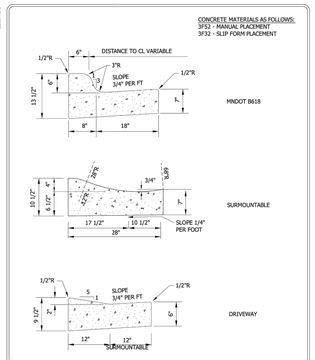

CURB AND GUTTER
CHASKA, MINNESOTA
LAST REVISION: APRIL 2016
PLATE NO. STR-1

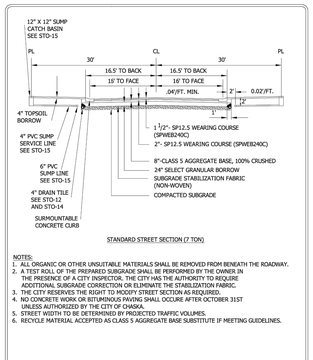

STANDARD STREET SECTION (7 TON)

NOTES:
1. ALL ORGANIC OR OTHER UNSUITABLE MATERIALS SHALL BE REMOVED FROM BENEATH THE ROADWAY.
2. A TEST ROLL OF THE PREPARED SUBGRADE SHALL BE PERFORMED BY THE OWNER IN THE PRESENCE OF A CITY INSPECTOR. THE CITY HAS THE AUTHORITY TO REQUIRE ADDITIONAL SUBGRADE CORRECTION OR ELIMINATE THE STABILIZATION FABRIC.
3. THE CITY RESERVES THE RIGHT TO MODIFY STREET SECTION AS REQUIRED.
4. NO CONCRETE WORK OR BITUMINOUS PAVING SHALL OCCUR AFTER OCTOBER 31ST UNLESS AUTHORIZED BY THE CITY OF CHASKA.
5. STREET WIDTH TO BE DETERMINED BY PROJECTED TRAFFIC VOLUMES.
6. RECYCLE MATERIAL ACCEPTED AS CLASS 5 AGGREGATE BASE SUBSTITUTE IF MEETING GUIDELINES.

TYPICAL SECTIONS FOR RESIDENTIAL STREETS 7 TON SECTION
CHASKA, MINNESOTA
LAST REVISION: JUNE 2012
PLATE NO. STR-7

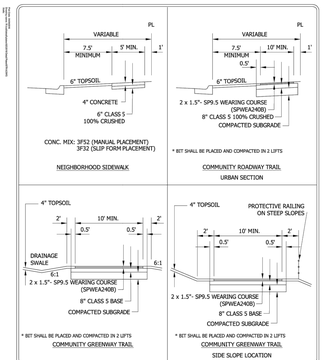

TYPICAL PLACEMENT AND SECTION FOR WALKS AND TRAILS
CHASKA, MINNESOTA
LAST REVISION: APRIL 2016
PLATE NO. STR-9

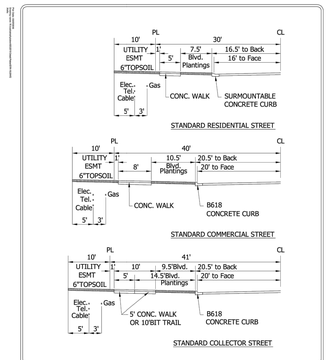

TYPICAL STREET COMPONENTS/DIMENSIONS RESIDENTIAL, COMMERCIAL & COLLECTOR
CHASKA, MINNESOTA
LAST REVISION: APRIL 2016
PLATE NO. STR-16

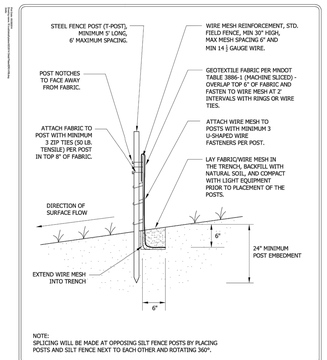

NOTE:
SPLICING WILL BE MADE AT OPPOSING SILT FENCE POSTS BY PLACING POSTS AND SILT FENCE NEXT TO EACH OTHER AND ROTATING 360°.

SILT FENCE HEAVY DUTY
CHASKA, MINNESOTA
LAST REVISION: APRIL 2008
PLATE NO. ERO-1B

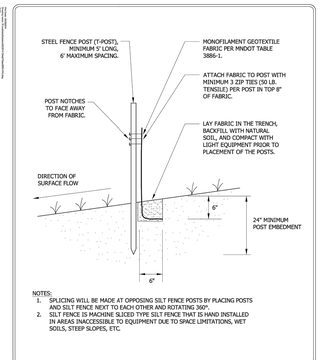

NOTES:
1. SPLICING WILL BE MADE AT OPPOSING SILT FENCE POSTS BY PLACING POSTS AND SILT FENCE NEXT TO EACH OTHER AND ROTATING 360°.
2. SILT FENCE IS MACHINE SLICED TYPE SILT FENCE THAT IS HAND INSTALLED IN AREAS INACCESSIBLE TO EQUIPMENT DUE TO SPACE LIMITATIONS, WET SOILS, STEEP SLOPES, ETC.

SILT FENCE STANDARD
CHASKA, MINNESOTA
LAST REVISION: APRIL 2008
PLATE NO. ERO-1C

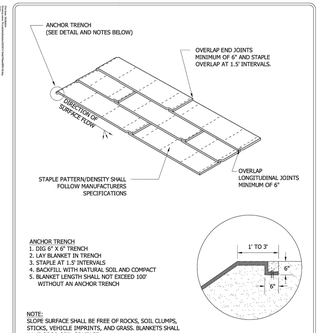

ANCHOR TRENCH
1. DIG 6" X 6" TRENCH
2. LAY BLANKET IN TRENCH
3. STAPLE AT 1.5' INTERVALS
4. BACKFILL WITH NATURAL SOIL AND COMPACT
5. BLANKET LENGTH SHALL NOT EXCEED 100' WITHOUT AN ANCHOR TRENCH

NOTE:
SLOPE SURFACE SHALL BE FREE OF ROCKS, SOIL CLUMPS, STICKS, VEHICLE IMPRINTS, AND GRASS. BLANKETS SHALL HAVE GOOD SOIL CONTACT.

EROSION CONTROL BLANKET INSTALLATION
CHASKA, MINNESOTA
LAST REVISION: APRIL 2008
PLATE NO. ERO-2

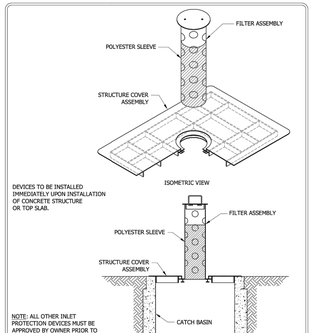

NOTE: ALL OTHER INLET PROTECTION DEVICES MUST BE APPROVED BY OWNER PRIOR TO INSTALLATION.

INLET PROTECTION FOR CATCH BASIN BEFORE CURB CONSTRUCTION
CHASKA, MINNESOTA
LAST REVISION: APRIL 2008
PLATE NO. ERO-4A

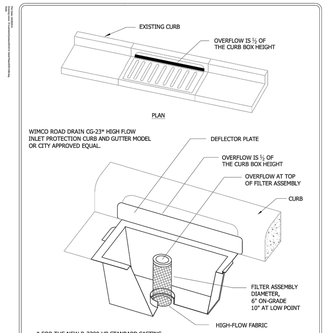

* FOR THE NEW R-3290-V8 STANDARD CASTING, INSTALL WIMCO ROAD DRAIN CG-3290 OR CITY APPROVED EQUAL.

INLET PROTECTION - CATCH BASIN INSERT AFTER CURB CONSTRUCTION
CHASKA, MINNESOTA
LAST REVISION: APRIL 2008
PLATE NO. ERO-4B

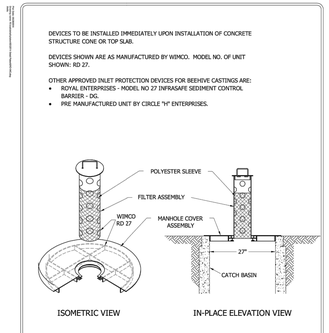

INLET PROTECTION BEEHIVE CASTING
CHASKA, MINNESOTA
LAST REVISION: APRIL 2008
PLATE NO. ERO-4C

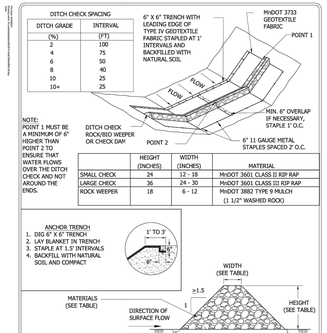

DITCH CHECK / WEEPER SIZING AND MATERIALS
CHASKA, MINNESOTA
LAST REVISION: APRIL 2008
PLATE NO. ERO-5

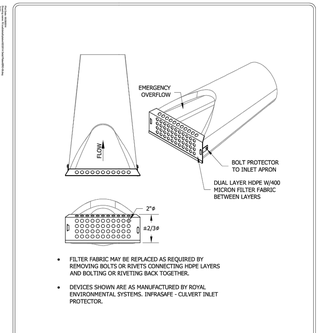

- FILTER FABRIC MAY BE REPLACED AS REQUIRED BY REMOVING BOLTS OR RIVETS CONNECTING HDPE LAYERS AND BOLTING OR RIVETING BACK TOGETHER.
- DEVICES SHOWN ARE AS MANUFACTURED BY ROYAL ENVIRONMENTAL SYSTEMS. INFRASAFE - CULVERT INLET PROTECTOR.

FLARED END EROSION CONTROL
CHASKA, MINNESOTA
LAST REVISION: FEB 2005
PLATE NO. ERO-6

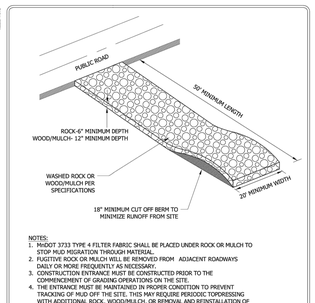

NOTES:
1. MnDOT 3733 TYPE 4 FILTER FABRIC SHALL BE PLACED UNDER ROCK OR MULCH TO STOP MUD MIGRATION THROUGH MATERIAL.
2. FUGITIVE ROCK OR MULCH WILL BE REMOVED FROM ADJACENT ROADWAYS DAILY OR MORE FREQUENTLY AS NECESSARY.
3. CONSTRUCTION ENTRANCE MUST BE CONSTRUCTED PRIOR TO THE COMMENCEMENT OF GRADING OPERATIONS ON THE SITE.
4. THE ENTRANCE MUST BE MAINTAINED IN PROPER CONDITION TO PREVENT TRACKING OF MUD OFF THE SITE. THIS MAY REQUIRE PERIODIC TOPDRESSING WITH ADDITIONAL ROCK, WOOD/MULCH, OR REMOVAL AND REINSTALLATION OF THE PAD.
5. THIS ENTRANCE WILL BE USED BY ALL VEHICLES ENTERING OR LEAVING THE PROJECT.
6. THE CONSTRUCTION ENTRANCE WILL BE REMOVED PRIOR TO THE PLACEMENT OF BITUMINOUS SURFACING.

ROCK CONSTRUCTION ENTRANCE
CHASKA, MINNESOTA
LAST REVISION: APRIL 2008
PLATE NO. ERO-7

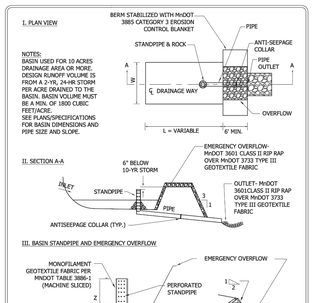

NOTES:
BASIN USED FOR 10 ACRES DRAINAGE AREA OR MORE. DESIGN RUNOFF VOLUME IS FROM A 2-YR, 24-HR STORM PER ACRE DRAINED TO THE BASIN. BASIN VOLUME MUST BE A MIN. OF 1800 CUBIC FEET/ACRE. SEE PLANS/SPECIFICATIONS FOR BASIN DIMENSIONS AND PIPE SIZE AND SLOPE.

NOTE: PIPE MATERIAL SHOULD BE RIGID

TEMPORARY SEDIMENTATION BASIN STANDPIPE OUTLET
CHASKA, MINNESOTA
LAST REVISION: APRIL 2008
PLATE NO. ERO-8B

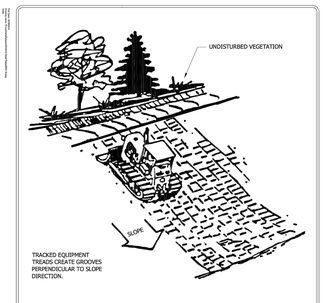

NOTE:
ALL SLOPES WITH A GRADE EQUAL TO OR STEEPER THAN 3:1 REQUIRE SLOPE TRACKING. SLOPES WITH A GRADE MORE GRADUAL THAN 3:1 REQUIRE SLOPE TRACKING IF THE STABILIZATION METHOD IS EROSION CONTROL BLANKET OR HYDROMULCH.

SLOPE TRACKING
CHASKA, MINNESOTA
LAST REVISION: FEB 2004
PLATE NO. ERO-10

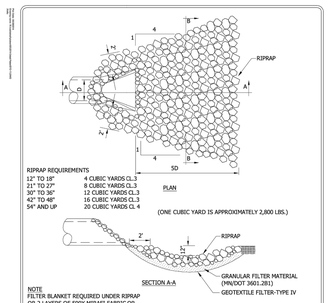

RIPRAP AT OUTLETS
CHASKA, MINNESOTA
LAST REVISION: APRIL 2004
PLATE NO. STO-11

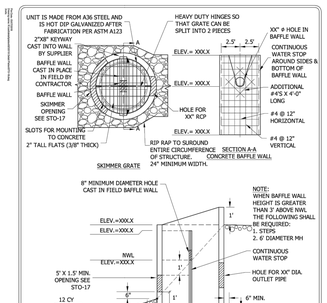

SKIMMER STRUCTURE WITH CAST IN FIELD CONCRETE BAFFLE WALL
CHASKA, MINNESOTA
LAST REVISION: MARCH 2018
PLATE NO. STO-18

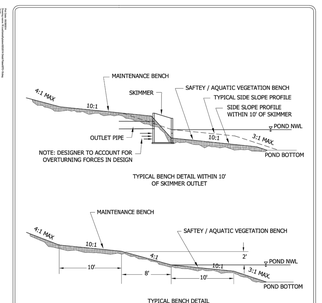

TYPICAL BENCH DETAIL
CHASKA, MINNESOTA
LAST REVISION: MARCH 2001
PLATE NO. STO-19

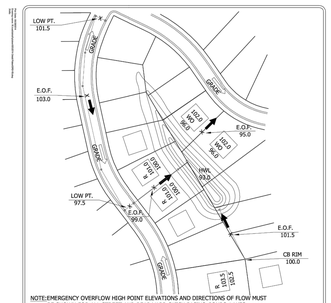

NOTE:EMERGENCY OVERFLOW HIGH POINT ELEVATIONS AND DIRECTIONS OF FLOW MUST BE SHOWN FOR ALL STREET AND REAR YARD CATCH BASINS, PONDS, LAKES, WETLANDS, DITCHES AND STREAMS. A MINIMUM ONE FOOT (1') SEPARATION MUST BE MAINTAINED BETWEEN E.O.F. HIGH POINTS AND THE LOWEST GROUND ELEVATION ADJACENT TO SURROUNDING HOMES OR BUILDINGS. A MAXIMUM 18" SEPARATION MUST BE MAINTAINED BETWEEN THE STREET CENTERLINE LOWPOINT ELEVATION AND THE E.O.F. HIGH POINT. ALL SIDE AND REAR LOT SWALES MUST HAVE A MINIMUM SLOPE OF 2%.

EMERGENCY OVERFLOW DETAIL
CHASKA, MINNESOTA
LAST REVISION: MARCH 2001
PLATE NO. GRD-5

N:\0024429.00\DWG\CIVIL\FINAL\FINAL GRADING\0024429C_DTF02.DWG

OAK CREEK

DESIGNED: FDH II
CHECKED: FDH II
DRAWN: FDH III
HORIZONTAL SCALE: ###
VERTICAL SCALE: ### OR ##

INITIAL ISSUE: 04/22/2022
REVISIONS:
1 05/24/22 CITY COMMENTS
2 . .
3 . .
4 . .
5 . .

PREPARED FOR:
DR HORTON, INC. - MINNESOTA
20860 KENBRIDGE COURT, SUITE 100
LAKEVILLE, MINNESOTA 55044

I HEREBY CERTIFY THAT THIS PLAN WAS PREPARED BY ME OR UNDER MY DIRECT SUPERVISION AND THAT I AM A DULY LICENSED PROFESSIONAL ENGINEER UNDER THE LAWS OF THE STATE OF MINNESOTA
FRANCIS D. HAGEN
DATE: 05/24/22 LICENSE NO. 17716

OAK CREEK
CHASKA, MN

Westwood
Phone (952) 937-5150 12701 Whitewater Drive, Suite #300
Fax (952) 937-5822 Minnetonka, MN 55343
Toll Free (888) 937-5150 westwoodps.com
Westwood Professional Services, Inc.

DETAILS

SHEET NUMBER: 13 OF 19
PROJECT NUMBER: 0024429.00
DATE: 05/24/22

© 2022 Westwood Professional Services, Inc.

Call 48 Hours before digging:
811 or call811.com
Common Ground Alliance

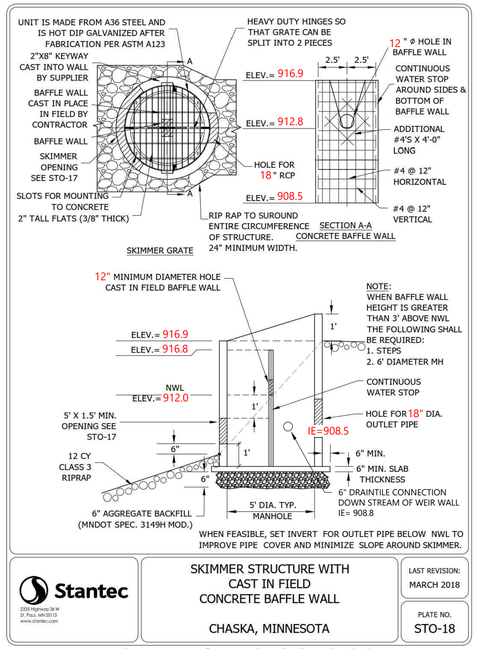

Stantec 2335 Highway 36 W St. Paul, MN 55113 www.stantec.com	SKIMMER STRUCTURE WITH CAST IN FIELD CONCRETE BAFFLE WALL CHASKA, MINNESOTA	LAST REVISION: MARCH 2018 PLATE NO. STO-18

POND 1 - OCS-269

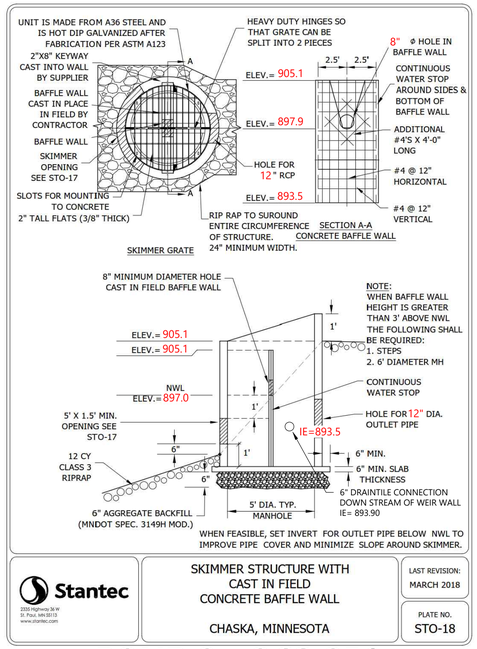

Stantec 2335 Highway 36 W St. Paul, MN 55113 www.stantec.com	SKIMMER STRUCTURE WITH CAST IN FIELD CONCRETE BAFFLE WALL CHASKA, MINNESOTA	LAST REVISION: MARCH 2018 PLATE NO. STO-18

POND 2 - OCS-251

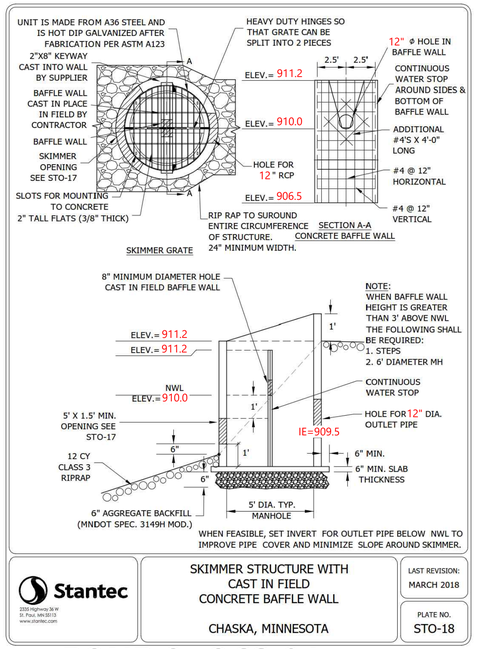

Stantec 2335 Highway 36 W St. Paul, MN 55113 www.stantec.com	SKIMMER STRUCTURE WITH CAST IN FIELD CONCRETE BAFFLE WALL CHASKA, MINNESOTA	LAST REVISION: MARCH 2018 PLATE NO. STO-18

POND 3- OCS-94

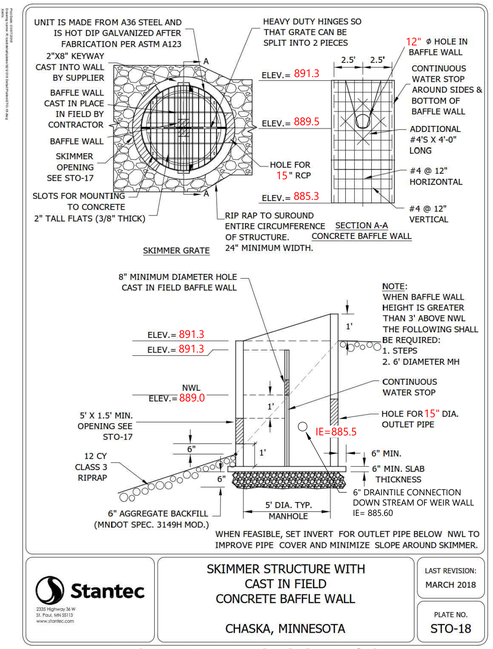

Stantec 2335 Highway 36 W St. Paul, MN 55113 www.stantec.com	SKIMMER STRUCTURE WITH CAST IN FIELD CONCRETE BAFFLE WALL CHASKA, MINNESOTA	LAST REVISION: MARCH 2018 PLATE NO. STO-18

POND 4- OCS-412

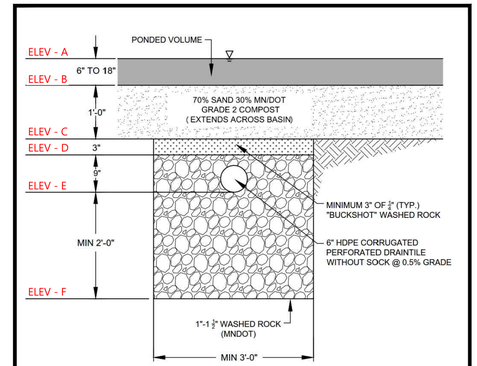

CALCULATIONS TO MEET RULES

VOLUME:

1. VOLUME REDUCTION IS CALCULATED AS 40% OF PONDED VOLUME.
2. IF NO VEGETATION IS PROVIDED, THE VOLUME CALCULATION IS LOWERED TO 50% OF ROCK VOLUME BELOW TILE.
3. TILE INVERT MUST BE 3 FT ABOVE DOWNSTREAM NWL, GROUNDWATER, BEDROCK, ETC.

WATER QUALITY:

1. FILTRATION IS CALCULATED AS 75% TP REMOVAL AND 90% TSS REMOVAL.

DRAWDOWN:

1. 48 HOUR DRAWDOWN OF BMPS IS REQUIRED. TO DETERMINE LENGTH OF TRENCH NEEDED, USE FILTRATION RATE OF 50 CF OF PONDED VOLUME WILL PASS THROUGH ONE LINEAR FOOT OF 3' WIDE TRENCH, OR 17 CF OF PONDED VOLUME PER SF OF SURFACE AREA.

CARVER COUNTY	WENCK ASSOCIATES Responsive partner. Exceptional outcomes.	BIORETENTION TRENCH	DEC 2016 DETAIL 1

M:\1709\GENERAL DETAILS\December 2016 Details\1-BIORETENTION TRENCH.dwg

PONDS 1, 2 and 4

POND BENCH						
POND #	ELEV. A	B	C	D	E	F
POND 1	912.8	912.0	911.0	910.75	910.0	908.0
POND 2	897.9	897.0	896.0	895.75	895.0	893.0
POND 4	889.5	889.0	888.0	897.75	887.0	885.0

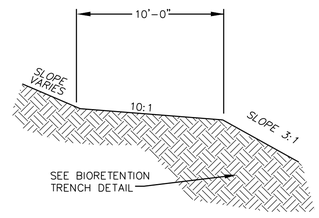

POND BENCH DETAIL

N:\0024429.00\DWG\CIVIL\FINAL\FINAL GRADING\0024429C-DTF02.DWG

OAK CREEK

DESIGNED:	FDH II
CHECKED:	FDH II
DRAWN:	FDH III
HORIZONTAL SCALE:	###
VERTICAL SCALE:	### OR ##

INITIAL ISSUE: 04/22/2022
REVISIONS:
1 05/24/22 CITY COMMENTS
2 . .
3 . .
4 . .
5 . .

PREPARED FOR:

DR HORTON, INC. - MINNESOTA
20860 KENBRIDGE COURT, SUITE 100
LAKEVILLE, MINNESOTA 55044

I HEREBY CERTIFY THAT THIS PLAN WAS PREPARED BY ME OR UNDER MY DIRECT SUPERVISION AND THAT I AM A DULY LICENSED PROFESSIONAL ENGINEER UNDER THE LAWS OF THE STATE OF MINNESOTA.
FRANCIS D. HAGEN
DATE: 05/24/22 LICENSE NO. 17716

OAK CREEK
CHASKA, MN

Westwood
Phone (952) 937-5150 12701 Whitewater Drive, Suite #300
Fax (952) 937-5822 Minnetonka, MN 55343
Toll Free (888) 937-5150 westwoodps.com
Westwood Professional Services, Inc.

DETAILS

PROJECT NUMBER: 0024429.00

SHEET NUMBER: 14 OF 19
DATE: 05/24/22

© 2022 Westwood Professional Services, Inc.

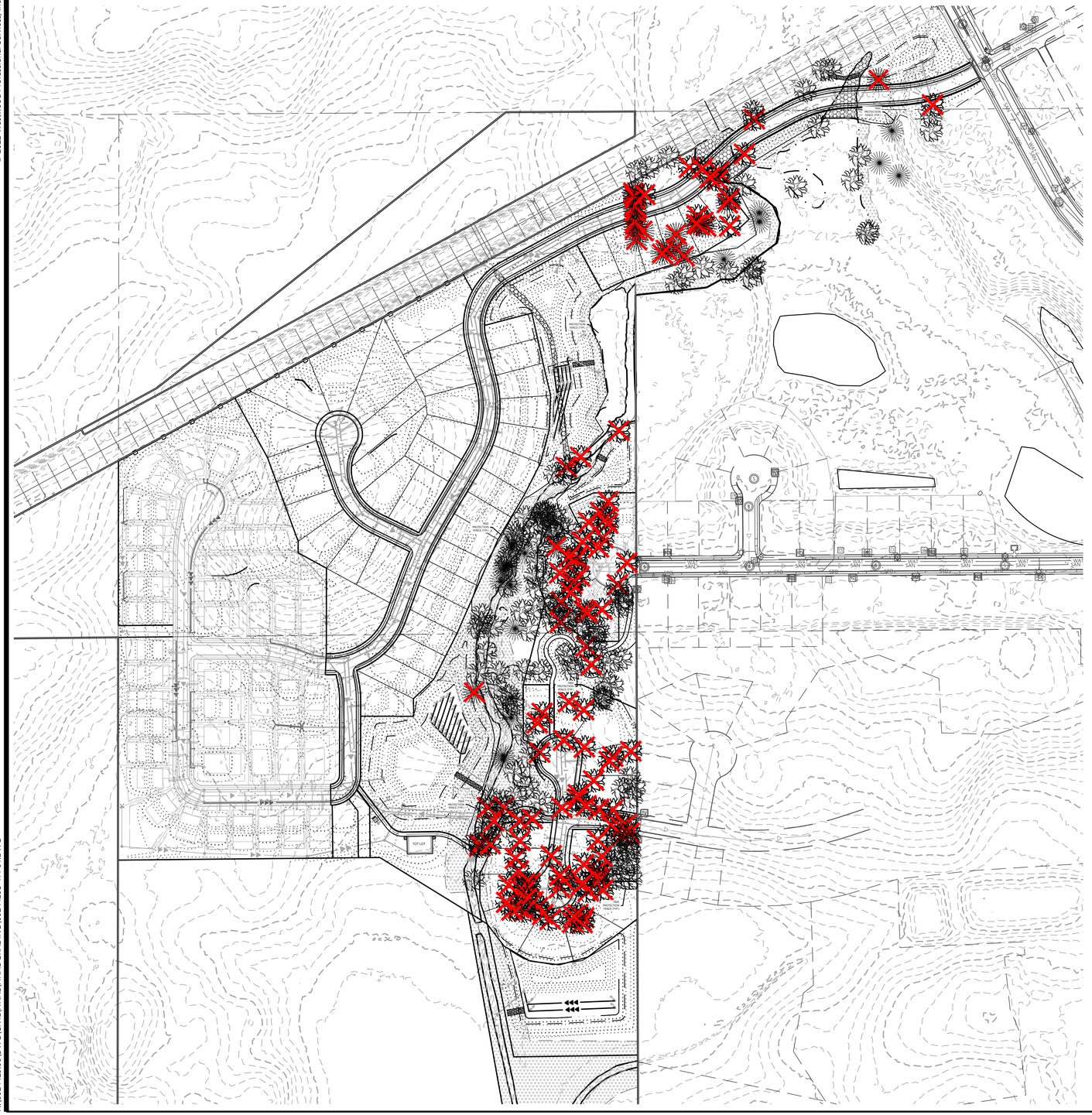

Call 48 Hours before digging:
811 or call811.com
Common Ground Alliance

TREE INVENTORY REGULATIONS

SIGNIFICANT TREES:
DECIDUOUS HARDWOOD TREES - 12" DBH OR LARGER
CONIFEROUS TREES - 15' HT. OR LARGER
CONIFEROUS TREES CONVERSION RATE: 1' HT. = 2.4" DBH 15' HT. = 7" DBH

TREE INVENTORY CALCULATIONS

Tree Inventory Calculations	
Total Healthy Caliper Inches Onsite	4,610 DBH In.
Total Healthy Trees Onsite	216 Trees
Total Healthy Caliper Inches Saved	2,468 DBH In.
Total Healthy Trees Saved	106 Trees
Total Healthy Caliper Inches Remove	2,142 DBH In.
Total Healthy Trees Removed	110 Trees

LEGEND

- EXISTING DECIDUOUS TREE TO REMAIN
- EXISTING DECIDUOUS TREE TO BE REMOVED
- EXISTING CONIFEROUS TREE TO REMAIN
- EXISTING CONIFEROUS TREE TO BE REMOVED

TREE PROTECTION DETAIL

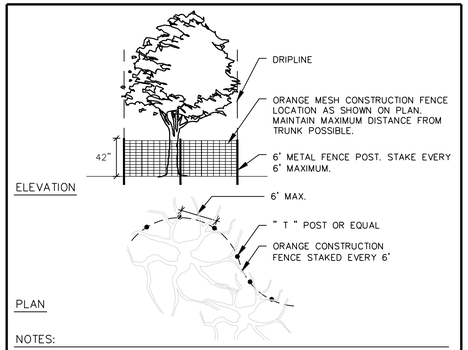

NOTES:

1. PRUNING WILL BE DONE BY PROFESSIONALS DURING APPROPRIATE PRUNING SEASON.
2. NO STORAGE OF MATERIALS, OPERATION OF MACHINERY, OR DEVELOPMENT OF ANY SORT WILL OCCUR WITHIN THE FENCE-LINE WITHOUT APPROVAL IN WRITING FROM THE CITY.
3. SITE GRADING TO BE DONE ONLY AFTER PROTECTIVE MEASURES HAVE BEEN TAKEN, CITY HAS APPROVED FENCING LOCATIONS, AND ALL CONTRACTORS HAVE BEEN BRIEFED ON TREE PRESERVATION TECHNIQUES.

Westwood

1" = 150'
0' 150' 300' 450'

N:\0024429.00\DWG\CIVIL\FINAL\FINAL GRADING\0024429S-TPP01.DWG

OAK CREEK

DESIGNED: FDH II
CHECKED: FDH II
DRAWN: FDH III
HORIZONTAL SCALE: 150.000012'
VERTICAL SCALE: 30' OR 15'

INITIAL ISSUE: 04/22/2022
REVISIONS:
1 05/24/22 CITY COMMENTS
2 . .
3 . .
4 . .
5 . .

PREPARED FOR:

DR HORTON, INC. - MINNESOTA
20860 KENBRIDGE COURT, SUITE 100
LAKEVILLE, MINNESOTA 55044

I HEREBY CERTIFY THAT THIS PLAN WAS PREPARED BY ME OR UNDER MY DIRECT SUPERVISION AND THAT I AM A DULY LICENSED LANDSCAPE ARCHITECT UNDER THE LAWS OF THE STATE OF MINNESOTA

Nicholas Meyer

DATE: 05/24/22 LICENSE NO. 53774

OAK CREEK
CHASKA, MN

Westwood
Phone (952) 937-5150 12701 Whitewater Drive, Suite #300
Fax (952) 937-5822 Minnetonka, MN 55343
Toll Free (888) 937-5150 westwoodps.com
Westwood Professional Services, Inc.

OVERALL TREE PRESERVATION PLAN

PROJECT NUMBER: 0024429.00

SHEET NUMBER: 15 OF 19
DATE: 05/24/22

© 2022 Westwood Professional Services, Inc.

Call 48 Hours before digging:
811 or call811.com
Common Ground Alliance

CHICAGO, MILWAUKEE, ST. PAUL AND PACIFIC RAILWAY

OAK CREEK DRIVE

OUTLOT N

OUTLOT A

OUTLOT B

OUTLOT B

TREE PROTECTION FENCE (TYP.)

TREE PROTECTION FENCE (TYP.)

1" = 50'

0' 50' 100' 150'

N:\0024429.00\DWG\CIVIL\FINAL\FINAL GRADING\0024429S-TPP01.DWG

OAK CREEK

DESIGNED:	FDH II
CHECKED:	FDH II
DRAWN:	FDH III
HORIZONTAL SCALE:	50'
VERTICAL SCALE:	10' OR 5'

INITIAL ISSUE: 04/22/2022
REVISIONS:

1	05/24/22	CITY COMMENTS
2	.	.
3	.	.
4	.	.

PREPARED FOR:

DR HORTON, INC. - MINNESOTA

20860 KENBRIDGE COURT, SUITE 100
LAKEVILLE, MINNESOTA 55044

I HEREBY CERTIFY THAT THIS PLAN WAS PREPARED BY ME OR UNDER MY DIRECT SUPERVISION AND THAT I AM A DULY LICENSED LANDSCAPE ARCHITECT UNDER THE LAWS OF THE STATE OF MINNESOTA

Nicholas Meyer

DATE: 05/24/22 LICENSE NO. 53774

OAK CREEK

CHASKA, MN

Westwood

Phone (952) 937-5150 12701 Whitewater Drive, Suite #300
Fax (952) 937-5822 Minnetonka, MN 55343
Toll Free (888) 937-5150 westwoodps.com

Westwood Professional Services, Inc.

TREE PRESERVATION PLAN

PROJECT NUMBER: 0024429.00

SHEET NUMBER: 16 OF 19

DATE: 05/24/22

© 2022 Westwood Professional Services, Inc.

Call 48 Hours before digging:
811 or call811.com
Common Ground Alliance



N:\0024429.00\DWG\CIVIL\FINAL\FINAL GRADING\0024429S-TPP01.DWG

OAK CREEK

DESIGNED:	FDH II
CHECKED:	FDH II
DRAWN:	FDH III
HORIZONTAL SCALE:	50.000005'
VERTICAL SCALE:	10' OR 5'

INITIAL ISSUE: 04/22/2022
REVISIONS:
1 05/24/22 CITY COMMENTS
2 . .
3 . .
4 . .
5 . .

PREPARED FOR:

DR HORTON, INC. - MINNESOTA

20860 KENBRIDGE COURT, SUITE 100
LAKEVILLE, MINNESOTA 55044

I HEREBY CERTIFY THAT THIS PLAN WAS PREPARED BY ME OR UNDER MY DIRECT SUPERVISION AND THAT I AM A DULY LICENSED LANDSCAPE ARCHITECT UNDER THE LAWS OF THE STATE OF MINNESOTA

Nicholas Meyer

DATE: 05/24/22 LICENSE NO. 53774

OAK CREEK

CHASKA, MN

Westwood

Phone (952) 937-5150 | 12701 Whitewater Drive, Suite #300
Fax (952) 937-5822 | Minnetonka, MN 55343
Toll Free (888) 937-5150 | westwoodps.com

Westwood Professional Services, Inc.

TREE PRESERVATION PLAN

PROJECT NUMBER: 0024429.00

SHEET NUMBER: 17 OF 19

DATE: 05/24/22

© 2022 Westwood Professional Services, Inc.

Call 48 Hours before digging:
811 or call811.com
Common Ground Alliance

OUTLOT L
OAK CREEK PASS
OAK CREEK DRIVE
OUTLOT B
OUTLOT E
OUTLOT F
TOT LOT
SOPHIA DRIVE
OUTLOT D
TREE PROTECTION FENCE (TYP.)
OAK CREEK CIRCLES
OUTLOT C
1" = 50'
0' 50' 100' 150'

N:\0024429.00\DWG\CIVIL\FINAL\FINAL GRADING\00244295-TPP01.DWG

OAK CREEK

DESIGNED: FDH II
CHECKED: FDH II
DRAWN: FDH III
HORIZONTAL SCALE: 50'
VERTICAL SCALE: 10' OR 5'

INITIAL ISSUE: 04/22/2022
REVISIONS:
1 05/24/22 CITY COMMENTS
2 . .
3 . .
4 . .
5 . .

PREPARED FOR:

DR HORTON, INC. - MINNESOTA
20860 KENBRIDGE COURT, SUITE 100
LAKEVILLE, MINNESOTA 55044

I HEREBY CERTIFY THAT THIS PLAN WAS PREPARED BY ME OR UNDER MY DIRECT SUPERVISION AND THAT I AM A DULY LICENSED LANDSCAPE ARCHITECT UNDER THE LAWS OF THE STATE OF MINNESOTA

Nicholas Meyer

DATE: 05/24/22 LICENSE NO. 53774

OAK CREEK
CHASKA, MN

Westwood
Phone (952) 937-5150 12701 Whitewater Drive, Suite #300
Fax (952) 937-5822 Minnetonka, MN 55343
Toll Free (888) 937-5150 westwoodps.com
Westwood Professional Services, Inc.

TREE PRESERVATION PLAN

PROJECT NUMBER: 0024429.00

SHEET NUMBER: 18 OF 19
DATE: 05/24/22

© 2022 Westwood Professional Services, Inc.

Call 48 Hours before digging:
811 or call811.com
Common Ground Alliance

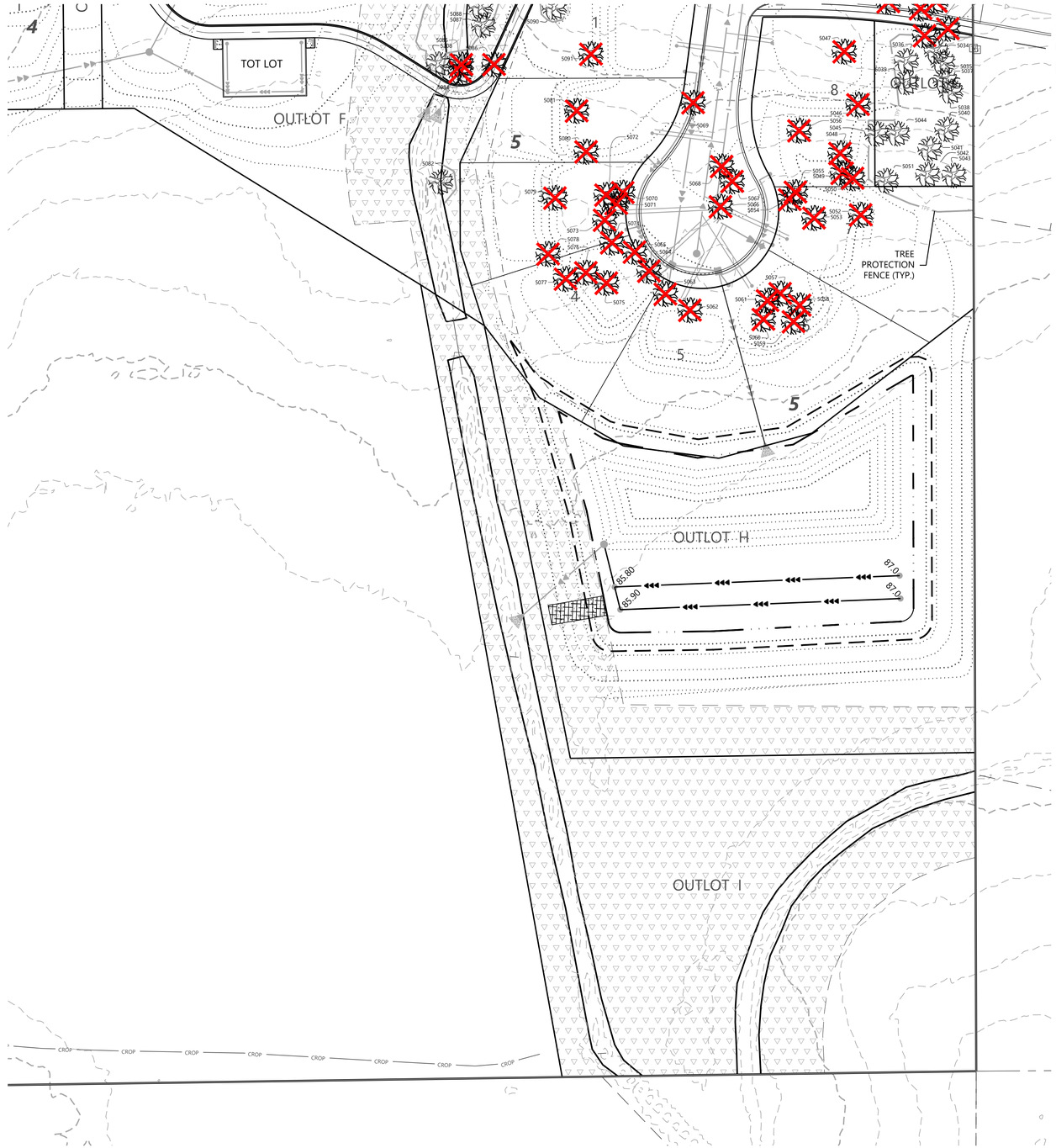

TREE PRESERVATION DATA

TREE TAG	SPECIES	SIZE (DBH)	NOTES	STATUS
5001	Red Oak	37	BD-35%	Removed-Exempt-Unhealthy
5002	Bur Oak	43		Removed
5003	Bur Oak	24		Removed
5004	Bur Oak	24		Removed
5005	Bur Oak	29		Removed
5006	Bur Oak	23		Removed
5007	Ash	43	EAB	Removed-Exempt-Unhealthy
5008	Sugar Maple	38		Removed
5009	Red Oak	26		Saved 1)
5010	Bur Oak	20	X	Saved
5011	Bur Oak	25		Saved
5012	Bur Oak	26		Saved
5013	Bur Oak	25		Saved
5014	Bur Oak	41		Saved
5015	Bur Oak	29		Saved
5016	Bur Oak	59		Saved
5017	American Elm	12		Saved
5018	American Elm	14		Saved
5019	Bur Oak	29		Saved
5020	Red Oak	39	BD-20%, Dead	Removed-Exempt-Unhealthy 1)
5021	Bur Oak	13		Removed
5022	Bur Oak	28		Removed
5023	Bur Oak	31		Saved
5024	Bur Oak	28		Saved
5025	Red Oak	37		Saved
5026	Bur Oak	22		Saved 1)
5027	Bur Oak	26		Removed
5028	Bur Oak	29		Removed
5029	Bur Oak	35		Removed
5030	Bur Oak	20		Removed
5031	Bur Oak	13		Removed
5032	Bur Oak	18		Removed
5033	Bur Oak	20		Removed
5034	Bur Oak	34		Saved
5035	Bur Oak	21		Saved
5036	Bur Oak	15		Saved
5037	Bur Oak	28		Saved
5038	Bur Oak	24		Saved
5039	Bur Oak	28	BD-10%	Saved
5040	Bur Oak	28		Saved
5041	Bur Oak	25		Saved
5042	Bur Oak	20		Saved
5043	Bur Oak	45		Saved
5044	Bur Oak	19		Saved
5045	Bur Oak	39		Saved 1)
5046	Bur Oak	32		Removed
5047	Bur Oak	24		Removed
5048	Bur Oak	18		Removed
5049	Bur Oak	18		Removed
5050	Bur Oak	19		Removed
5051	Bur Oak	23		Saved
5052	Bur Oak	32		Removed
5053	Bur Oak	32		Removed
5054	Bur Oak	23		Removed
5055	American Elm	12		Removed
5056	Bur Oak	28		Removed
5057	Bur Oak	26		Removed
5058	Fruit Tree	19		Removed
5059	Bur Oak	31		Removed
5060	Bur Oak	19		Removed
5061	Bur Oak	19		Removed
5062	Basswood	18		Removed
5063	Bur Oak	30		Removed
5064	Bur Oak	27		Removed
5065	Bur Oak	17		Removed
5066	Bur Oak	34		Removed
5067	Bur Oak	20		Removed
5068	Bur Oak	25		Removed
5069	Basswood	34		Removed
5070	Bur Oak	25		Removed
5071	Bur Oak	17	BD-15%	Removed
5072	Bur Oak	16		Removed
5073	Bur Oak	24		Removed
5074	Bur Oak	16		Removed
5075	Bur Oak	16		Removed
5076	Bur Oak	30		Removed
5077	Bur Oak	26		Removed
5078	Basswood	35	X BD, Dead	Removed-Exempt-Unhealthy
5079	Bur Oak	26		Removed
5080	Bur Oak	24		Removed
5081	Bur Oak	30		Removed
5082	Siberian Elm	17	Invasive	Saved-Exempt-Invasive
5084	Siberian Elm	12	Invasive	Removed-Exempt-Invasive 1)
5085	Bur Oak	29		Removed-Exempt-Unhealthy 1)
5086	Bur Oak	19		Removed
5087	Basswood	29	BD, Dead	Saved-Exempt-Unhealthy
5088	Bur Oak	25		Saved
5089	Bur Oak	24		Removed
5090	Bur Oak	28		Saved 1)
5091	Bur Oak	28		Removed
5092	Bur Oak	34		Removed
5093	Bur Oak	22		Removed
5094	Bur Oak	22		Saved
5095	Bur Oak	32		Removed
5096	Bur Oak	23		Removed
5097	Bur Oak	30		Removed
5098	Bur Oak	29		Removed
5099	Bur Oak	24		Removed
5100	Bur Oak	29		Removed
5101	Bur Oak	28		Removed
5102	Basswood	41	PD, Dead	Removed-Exempt-Unhealthy
5103	Bur Oak	35		Removed
5104	Bur Oak	21		Removed
5105	Red Oak	36	BD-40%	Removed-Exempt-Unhealthy
5106	Bur Oak	28		Saved
5107	Red Oak	24		Saved
5108	Bur Oak	28		Saved
5109	Red Oak	42	BD-60%	Removed-Exempt-Unhealthy 1)
5110	Bur Oak	24	Dead	Removed-Exempt-Unhealthy 1)
5111	Bur Oak	22		Saved
5112	Bur Oak	18		Saved
5113	Bur Oak	24		Saved
5114	Bur Oak	20		Saved
5115	Red Oak	39	BD, Dead	Removed-Exempt-Unhealthy
5116	Bur Oak	18		Saved
5117	Bur Oak	22		Saved
5118	Eastern Red Cedar	7		Removed
5119	Bur Oak	27		Removed
5120	Bur Oak	26		Removed
5121	Bur Oak	24		Saved
5122	Bur Oak	19		Saved
5123	Bur Oak	16		Saved
5124	Bur Oak	17		Saved
5125	Bur Oak	21		Saved
5126	Bur Oak	13		Saved
5127	Bur Oak	16		Saved
5128	Bur Oak	20		Saved
5129	Bur Oak	18		Saved
5130	Bur Oak	27		Saved 1)
5131	Bur Oak	12		Saved
5132	Bur Oak	26		Saved
5133	Eastern Red Cedar	9		Removed
5134	Bur Oak	17		Saved
5135	Bur Oak	23		Removed
5136	Bur Oak	24		Removed
5137	Bur Oak	16		Removed
5138	Bur Oak	24		Removed
5139	Bur Oak	26		Removed
5140	Bur Oak	29		Removed
5141	Bur Oak	24	X	Removed
5142	Bur Oak	38		Removed
5143	Bur Oak	22		Saved
5144	Bur Oak	24		Removed
5145	Bur Oak	20		Saved 1)
5146	Bur Oak	19		Saved
5147	Bur Oak	24		Saved
5148	Bur Oak	29		Saved
5149	Bur Oak	28	PD	Removed-Exempt-Unhealthy 1)
5150	Bur Oak	19		Saved
5151	Bur Oak	18		Saved
5152	Bur Oak	28		Saved
5153	Red Oak	70	BD-35%	Saved-Exempt-Unhealthy
5154	Bur Oak	35		Removed
5155	Bur Oak	34		Saved
5156	Black Willow	28	BD-30%	Saved-Exempt-Unhealthy
5157	Bur Oak	37		Saved
5158	Bur Oak	39		Saved
5159	Basswood	39		Removed
5160	Bur Oak	42		Saved
5161	American Elm	12		Removed
5162	Bur Oak	32		Saved
5163	Eastern Red Cedar	7		Saved
5164	Eastern Red Cedar	7		Saved
5165	Ash	12	EAB	Saved-Exempt-Unhealthy
5166	Eastern Red Cedar	9	X	Saved
5167	Siberian Elm	12	Invasive	Saved-Exempt-Invasive
5168	Red Oak	32		Saved
5169	Eastern Red Cedar	6		Saved
5170	American Elm	12		Saved
5171	Bur Oak	30		Saved
5172	Basswood	29		Saved
5173	Siberian Elm	13	Invasive	Saved-Exempt-Invasive
5174	Sugar Maple	26		Saved
5175	Eastern Red Cedar	10		Saved
5176	Bur Oak	50	BD-10%	Saved
5177	Ash	30	BD-65% EAB	Saved-Exempt-Unhealthy
5178	Bur Oak	32		Saved
5179	Ash	13	EAB	Saved-Exempt-Unhealthy
5180	Eastern Red Cedar	5		Saved
5181	Bur Oak	30		Saved
5182	Bur Oak	40		Saved
5183	Bur Oak	34		Saved
5184	Eastern Red Cedar	7		Saved
5185	American Elm	12	BD, Dead	Removed-Exempt-Unhealthy
5186	American Elm	12	BD, Dead	Removed-Exempt-Unhealthy
5187	Boxelder	14		Removed
5188	American Elm	14		Saved
5189	Ash	37	EAB	Saved-Exempt-Unhealthy
5190	Basswood	30	X	Saved
5191	American Elm	20		Saved
5192	Bur Oak	74		Saved
5193	Basswood	22		Saved
5194	Eastern Red Cedar	13		Saved
5195	Eastern Red Cedar	6		Saved
5196	Basswood	30		Saved
5197	Basswood	36	X	Saved
5198	Eastern Red Cedar	7		Saved
5199	Eastern Red Cedar	6		Saved
5200	Eastern Red Cedar	9		Saved
5201	Eastern Red Cedar	11		Saved
5202	Eastern Red Cedar	21		Saved
5203	Basswood	37	X	Saved
5204	Basswood	21		Saved
5205	American Elm	12		Saved
5206	Red Oak	29		Saved
5207	Eastern Red Cedar	15		Removed
5208	Bur Oak	34		Saved
6001	Cottonwood	13		Offsite
6002	Cottonwood	12		Offsite
6003	Eastern Red Cedar	2		Offsite
6004	Eastern Red Cedar	2		Offsite
6005	Eastern Red Cedar	2		Offsite
6006	Eastern Red Cedar	1		Removed
6007	Boxelder	18		Offsite
6008	Boxelder	22		Offsite
6009	Boxelder	12	x	Saved
6010	American Elm	14		Offsite
6011	Ash	13	EAB	Offsite
6012	Black Willow	23	x	Offsite
6013	Black Willow	54		Offsite
6014	American Elm	12		Offsite
6015	Eastern Red Cedar	2		Saved
6016	Eastern Red Cedar	3		Saved
6017	Cottonwood	14		Offsite
6018	Cottonwood	15		Offsite
6019	Cottonwood	14		Offsite
6020	Boxelder	12		Saved
6021	Eastern Red Cedar	2		Saved
6022	Ash	12	EAB	Saved-Exempt-Unhealthy
6023	Ash	12	EAB	Saved-Exempt-Unhealthy
6024	Ash	13	EAB	Saved-Exempt-Unhealthy
6025	Eastern Red Cedar	6		Removed
6026	Eastern Red Cedar	5		Removed
6027	Eastern Red Cedar	4		Removed
6028	Eastern Red Cedar	1		Removed
6029	Eastern Red Cedar	8		Removed
6030	Eastern Red Cedar	2		Removed
6031	Eastern Red Cedar	5		Removed
6032	Eastern Red Cedar	7		Removed
6033	Eastern Red Cedar	3		Removed
6034	Eastern Red Cedar	2		Removed
6035	Eastern Red Cedar	7		Removed
6036	Eastern Red Cedar	7		Removed
6037	Eastern Red Cedar	10		Removed
6038	Eastern Red Cedar	3		Removed
6039	Eastern Red Cedar	3		Removed
6040	Eastern Red Cedar	2		Removed
6041	Boxelder	14	x	Offsite
6042	Boxelder	14		Offsite
6043	Boxelder	12		Offsite
6044	American Elm	12		Removed
6045	Ash	12	EAB	Removed-Exempt-Unhealthy
6046	Ash	15	EAB	Removed-Exempt-Unhealthy
6047	Ash	13	EAB	Removed-Exempt-Unhealthy
6048	Ash	15	EAB	Removed-Exempt-Unhealthy
6049	Ash	14	EAB	Removed-Exempt-Unhealthy
6050	Eastern Red Cedar	1		Removed
6051	Eastern Red Cedar	1		Removed
6052	Ash	15	EAB	Offsite
6053	Ash	12	EAB	Removed-Exempt-Unhealthy
6054	Eastern Red Cedar	4		Removed
6055	American Elm	4		Removed
6056	Ash	12	EAB	Removed-Exempt-Unhealthy
6057	Eastern Red Cedar	3		Removed
6058	Eastern Red Cedar	2		Removed
6059	Eastern Red Cedar	1		Removed
6060	Black Cherry	12		Removed
6061	Boxelder	12		Removed
6062	Ash	13	EAB	Removed-Exempt-Unhealthy
6063	American Elm	16		Offsite
6064	Boxelder	18	x	Offsite
6065	Ash	14	pd 40% trunk	Offsite
6066	Cottonwood	12		Removed

NOTE: 1) 5/24/22 SITE VISIT / FIELD REVIEW WITH CITY

1" = 50'
0' 50' 100' 150'

OAK CREEK

N:\0024429.00\DWG\CIVIL\FINAL\FINAL GRADING\0024429S-TPP01.DWG

DESIGNED: FDH II
CHECKED: FDH II
DRAWN: FDH III
HORIZONTAL SCALE: ##########
VERTICAL SCALE: ### OR ###

INITIAL ISSUE: 04/22/2022
REVISIONS:
1 05/24/22 CITY COMMENTS
2 . .
3 . .
4 . .
5 . .

PREPARED FOR:
DR HORTON, INC. - MINNESOTA
20860 KENBRIDGE COURT, SUITE 100
LAKEVILLE, MINNESOTA 55044

I HEREBY CERTIFY THAT THIS PLAN WAS PREPARED BY ME OR UNDER MY DIRECT SUPERVISION AND THAT I AM A DULY LICENSED LANDSCAPE ARCHITECT UNDER THE LAWS OF THE STATE OF MINNESOTA
Nicholas Meyer
DATE: 05/24/22 LICENSE NO. 53774

OAK CREEK
CHASKA, MN

Westwood
Phone (952) 937-5150 12701 Whitewater Drive, Suite #300
Fax (952) 937-5822 Minnetonka, MN 55343
Toll Free (888) 937-5150 westwoodps.com
Westwood Professional Services, Inc.

TREE PRESERVATION PLAN & DATA

PROJECT NUMBER: 0024429.00

SHEET NUMBER: 19 OF 19
DATE: 05/24/22

© 2022 Westwood Professional Services, Inc.

CONSTRUCTION PLANS

FOR

FINAL LANDSCAPE PLANS

FOR

OAK CREEK
CHASKA, MINNESOTA



Vicinity Map
(NOT TO SCALE)

PREPARED FOR:

DR HORTON, INC. - MINNESOTA
20860 KENBRIDGE COURT, SUITE 100
LAKEVILLE, MINNESOTA 55044
CONTACT: RICK THOMSON
PHONE: 952-985-7430
EMAIL: RLTHOMSON@DRHORTON.COM

PREPARED BY:

Westwood

Phone (952) 937-5150
Fax (952) 937-5822
Toll Free (888) 937-5150
12701 Whitewater Drive, Suite #300
Minnetonka, MN 55343
westwoodps.com

Westwood Professional Services, Inc.

PROJECT NUMBER: 0024429.00
CONTACT: FRANCIS D. HAGEN

SHEET INDEX

Sheet List Table	
SHEET NUMBER	SHEET TITLE
1	COVER
2	OVERALL LANDSCAPE PLAN
3	LANDSCAPE PLAN
4	LANDSCAPE PLAN
5	LANDSCAPE PLAN
6	LANDSCAPE PLAN - NOTES - DETAILS
7	LANDSCAPE DETAILS

NO.	DATE	REVISION	SHEETS
1	05/24/22	CITY COMMENTS	ALL
.	.	.	
.	.	.	
.	.	.	
.	.	.	
.	.	.	
.	.	.	
.	.	.	
.	.	.	
.	.	.	

CONSTRUCTION PLANS
FOR
FINAL LANDSCAPE PLANS
FOR
OAK CREEK
CHASKA, MINNESOTA

INITIAL SUBMITTAL DATE: 05/02/22 SHEET: 1 OF 7

OAK CREEK
PROJECT NUMBER: 0024429.00

S:\0024429.00\DWG\CIVIL\FINAL\LANDSCAPE\0024429L-CV01.DWG

© 2022 Westwood Professional Services, Inc.

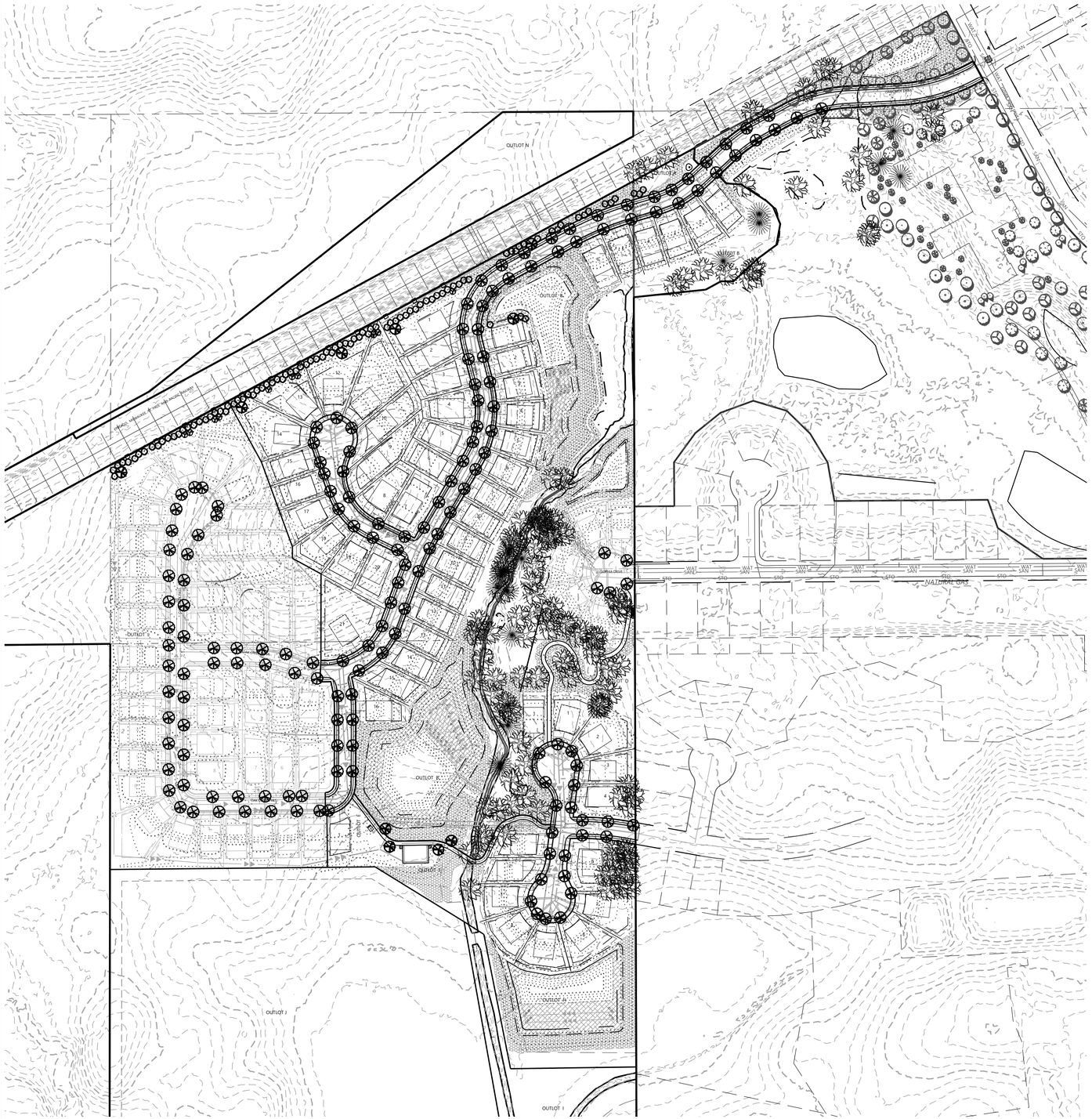
OUTLOT N
OUTLOT M
OUTLOT L
OUTLOT K
OUTLOT J
OUTLOT I
OUTLOT H
OUTLOT G
OUTLOT F
OUTLOT E
OUTLOT D
OUTLOT C
OUTLOT B
OUTLOT A
Oxbow Trail
Oxbow Trail
Oxbow Trail

© 2022 Westwood Professional Services, Inc.

Call 48 Hours before digging:
811 or call811.com
Common Ground Alliance

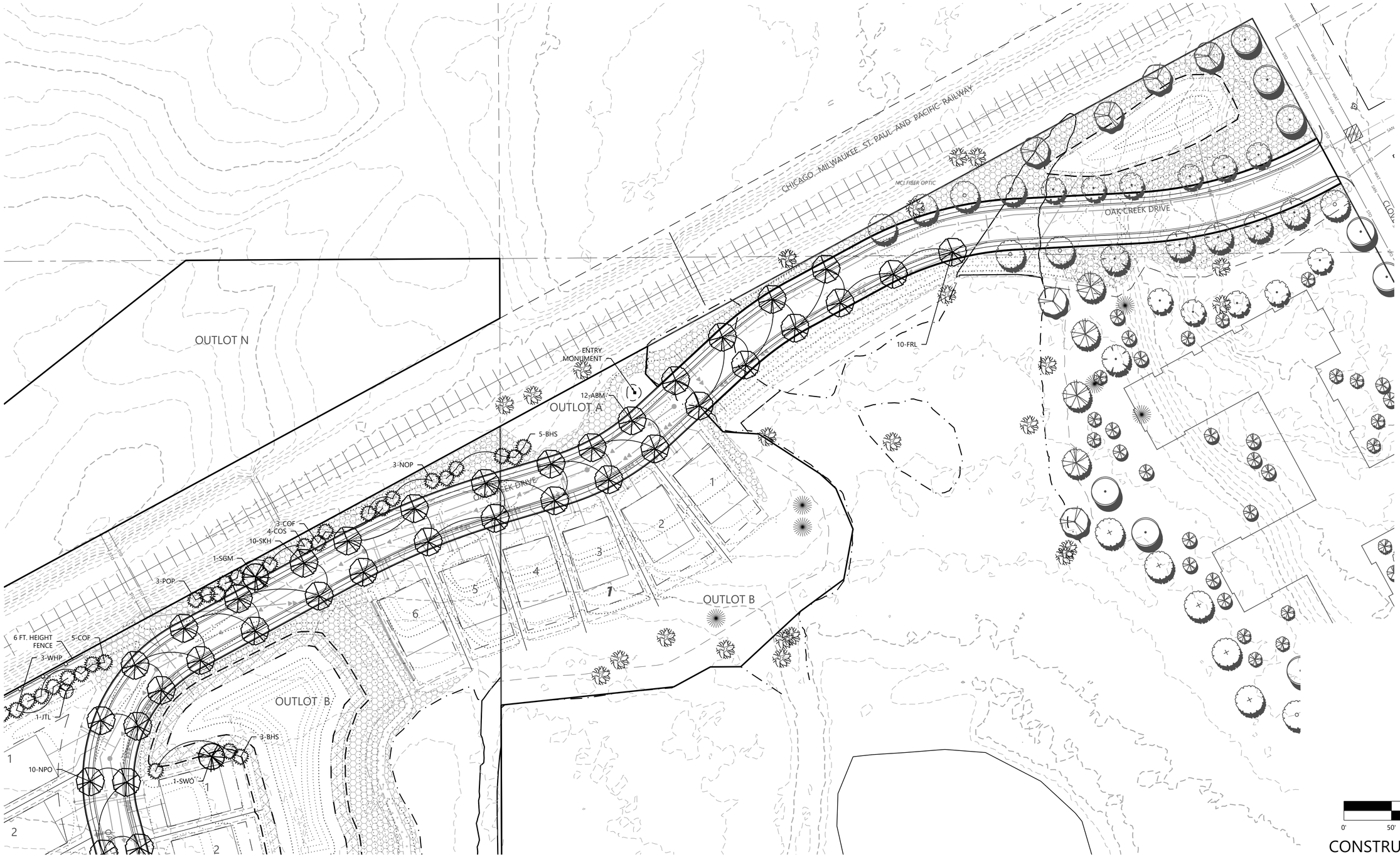

CONSTRUCTION PLANS

N:\0024429.00\DWG\CIVIL\FINAL\LANDSCAPE\0024429L-PLP01.DWG

OAK CREEK

DESIGNED: .
CHECKED: .
DRAWN: .
HORIZONTAL SCALE: ##########
VERTICAL SCALE: ### OR ###

INITIAL ISSUE: 05/02/22
REVISIONS:
1 05/24/22 CITY COMMENTS
2 . .
3 . .
4 . .
5 . .

PREPARED FOR:

DR HORTON, INC. - MINNESOTA

20860 KENBRIDGE COURT, SUITE 100
LAKEVILLE, MINNESOTA 55044

I HEREBY CERTIFY THAT THIS PLAN WAS PREPARED BY ME OR UNDER MY DIRECT SUPERVISION AND THAT I AM A DULY LICENSED LANDSCAPE ARCHITECT UNDER THE LAWS OF THE STATE OF MINNESOTA

NICHOLAS T. MEYER
DATE: 05/24/22 LICENSE NO. 53774

OAK CREEK

CHASKA, MINNESOTA

Westwood

Phone (952) 937-5150
Fax (952) 937-5822
Toll Free (888) 937-5150

12701 Whitewater Drive, Suite #300
Minnetonka, MN 55343
westwoodps.com

Westwood Professional Services, Inc.

LANDSCAPE PLAN

PROJECT NUMBER: 0024429.00

SHEET NUMBER: 3 OF 7

DATE: 05/24/22

© 2022 Westwood Professional Services, Inc.

Call 48 Hours before digging:
811 or call811.com
Common Ground Alliance



1" = 50'
0' 50' 100' 150'

CONSTRUCTION PLANS

N:\0024429.00\DWG\CIVIL\FINAL\LANDSCAPE\0024429L-PLF01.DWG

OAK CREEK

DESIGNED: .
CHECKED: .
DRAWN: .
HORIZONTAL SCALE: ##########
VERTICAL SCALE: ### OR ###

INITIAL ISSUE: 05/02/22
REVISIONS:
1 05/24/22 CITY COMMENTS
2 . .
3 . .
4 . .
5 . .

PREPARED FOR:

DR HORTON, INC. - MINNESOTA
20860 KENBRIDGE COURT, SUITE 100
LAKEVILLE, MINNESOTA 55044

I HEREBY CERTIFY THAT THIS PLAN WAS PREPARED BY ME OR UNDER MY DIRECT SUPERVISION AND THAT I AM A DULY LICENSED LANDSCAPE ARCHITECT UNDER THE LAWS OF THE STATE OF MINNESOTA

NICHOLAS T. MEYER
DATE: 05/24/22 LICENSE NO. 53774

OAK CREEK
CHASKA, MINNESOTA

Westwood
Phone (952) 937-5150 12701 Whitewater Drive, Suite #300
Fax (952) 937-5822 Minnetonka, MN 55343
Toll Free (888) 937-5150 westwoodps.com
Westwood Professional Services, Inc.

LANDSCAPE PLAN

SHEET NUMBER: 4 OF 7
PROJECT NUMBER: 0024429.00
DATE: 05/24/22

© 2022 Westwood Professional Services, Inc.

Call 48 Hours before digging:
811 or call811.com
Common Ground Alliance

OUTLOT L
OUTLOT D
OUTLOT B
OUTLOT E
OUTLOT F
OUTLOT G
OUTLOT H
TOT LOT
OAK CREEK PASS
OAK CREEK DRIVE
SOPHIA DRIVE
OAK CREEK CIRCLE
9-REL
10-ABM
11-FRL
8-HAK
5-REL
6-TEA
12-ACE
12-REO
1-SWO
2-AGG
1-RIB
8-REO
10-FFM
5-ACE

1" = 50'
0' 50' 100' 150'

CONSTRUCTION PLANS

N:\0024429.00\DWG\CIVIL\FINAL\LANDSCAPE\0024429L-PLF01.DWG

OAK CREEK

DESIGNED: .
CHECKED: .
DRAWN: .
HORIZONTAL SCALE: ##########
VERTICAL SCALE: ### OR ###

INITIAL ISSUE: 05/02/22
REVISIONS:
1 05/24/22 CITY COMMENTS
2 . .
3 . .
4 . .
5 . .

PREPARED FOR:
DR HORTON, INC. - MINNESOTA
20860 KENBRIDGE COURT, SUITE 100
LAKEVILLE, MINNESOTA 55044

I HEREBY CERTIFY THAT THIS PLAN WAS PREPARED BY ME OR UNDER MY DIRECT SUPERVISION AND THAT I AM A DULY LICENSED LANDSCAPE ARCHITECT UNDER THE LAWS OF THE STATE OF MINNESOTA
Nicholas Meyer
NICHOLAS T. MEYER
DATE: 05/24/22 LICENSE NO. 53774

OAK CREEK
CHASKA, MINNESOTA

Westwood
Phone (952) 937-5150 12701 Whitewater Drive, Suite #300
Fax (952) 937-5822 Minnetonka, MN 55343
Toll Free (888) 937-5150 westwoodps.com
Westwood Professional Services, Inc.

LANDSCAPE PLAN

SHEET NUMBER: 5 OF 7
PROJECT NUMBER: 0024429.00
DATE: 05/24/22

© 2022 Westwood Professional Services, Inc.

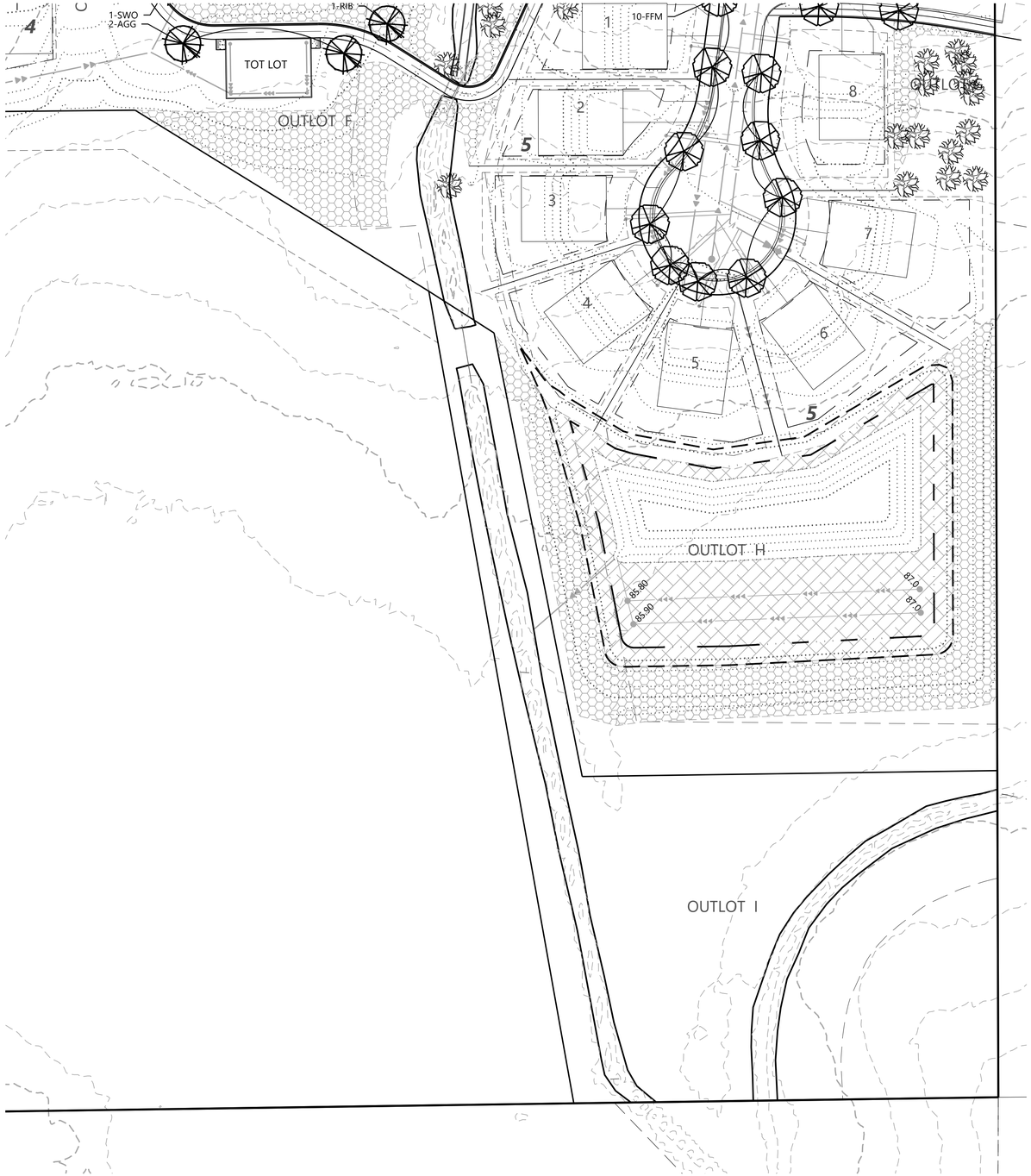

PLANTING NOTES

1. CONTRACTOR SHALL CONTACT COMMON GROUND ALLIANCE AT 811 OR CALL811.COM TO VERIFY LOCATIONS OF ALL UNDERGROUND UTILITIES PRIOR TO INSTALLATION OF ANY PLANTS OR LANDSCAPE MATERIAL.
2. ACTUAL LOCATION OF PLANT MATERIAL IS SUBJECT TO FIELD AND SITE CONDITIONS.
3. NO PLANTING WILL BE INSTALLED UNTIL ALL GRADING AND CONSTRUCTION HAS BEEN COMPLETED IN THE IMMEDIATE AREA.
4. ALL SUBSTITUTIONS MUST BE APPROVED BY THE LANDSCAPE ARCHITECT PRIOR TO SUBMISSION OF ANY BID AND/OR QUOTE BY THE LANDSCAPE CONTRACTOR.
5. CONTRACTOR SHALL PROVIDE TWO YEAR GUARANTEE OF ALL PLANT MATERIALS. THE GUARANTEE BEGINS ON THE DATE OF THE LANDSCAPE ARCHITECT'S OR OWNER'S WRITTEN ACCEPTANCE OF THE INITIAL PLANTING. REPLACEMENT PLANT MATERIAL SHALL HAVE A ONE YEAR GUARANTEE COMMENCING UPON PLANTING.
6. ALL PLANTS TO BE SPECIMEN GRADE, MINNESOTA-GROWN AND/OR HARDY. SPECIMEN GRADE SHALL ADHERE TO, BUT IS NOT LIMITED BY, THE FOLLOWING STANDARDS:
   ALL PLANTS SHALL BE FREE FROM DISEASE, PESTS, WOUNDS, SCARS, ETC.
   ALL PLANTS SHALL BE FREE FROM NOTICEABLE GAPS, HOLES, OR DEFORMITIES.
   ALL PLANTS SHALL BE FREE FROM BROKEN OR DEAD BRANCHES.
   ALL PLANTS SHALL HAVE HEAVY, HEALTHY BRANCHING AND LEAFING.
   CONIFEROUS TREES SHALL HAVE AN ESTABLISHED MAIN LEADER AND A HEIGHT TO WIDTH RATIO OF NO LESS THAN 5:3.
7. PLANTS TO MEET AMERICAN STANDARD FOR NURSERY STOCK (ANSI Z60.1-2014 OR MOST CURRENT VERSION) REQUIREMENTS FOR SIZE AND TYPE SPECIFIED.
8. PLANTS TO BE INSTALLED AS PER MNLA & ANSI STANDARD PLANTING PRACTICES.
9. PLANTS SHALL BE IMMEDIATELY PLANTED UPON ARRIVAL AT SITE. PROPERLY HEEL-IN MATERIALS IF NECESSARY; TEMPORARY ONLY.
10. PRIOR TO PLANTING, FIELD VERIFY THAT THE ROOT COLLAR/ROOT FLAIR IS LOCATED AT THE TOP OF THE BALLED & BURLAP TREE. IF THIS IS NOT THE CASE, SOIL SHALL BE REMOVED DOWN TO THE ROOT COLLAR/ROOT FLAIR. WHEN THE BALLED & BURLAP TREE IS PLANTED, THE ROOT COLLAR/ROOT FLAIR SHALL BE EVEN OR SLIGHTLY ABOVE FINISHED GRADE.
11. OPEN TOP OF BURLAP ON BB MATERIALS; REMOVE POT ON POTTED PLANTS; SPLIT AND BREAK APART PEAT POTS.
12. PRUNE PLANTS AS NECESSARY - PER STANDARD NURSERY PRACTICE AND TO CORRECT POOR BRANCHING OF EXISTING AND PROPOSED TREES.
13. WRAP ALL SMOOTH-BARKED TREES - FASTEN TOP AND BOTTOM. REMOVE BY APRIL 1ST.
14. STAKING OF TREES AS REQUIRED; REPOSITION, PLUMB AND STAKE IF NOT PLUMB AFTER ONE YEAR.
15. THE NEED FOR SOIL AMENDMENTS SHALL BE DETERMINED UPON SITE SOIL CONDITIONS PRIOR TO PLANTING. LANDSCAPE CONTRACTOR SHALL NOTIFY LANDSCAPE ARCHITECT FOR THE NEED OF ANY SOIL AMENDMENTS.
16. BACKFILL SOIL AND TOPSOIL TO ADHERE TO MN/DOT STANDARD SPECIFICATION 3877 (SELECT TOPSOIL BORROW) AND TO BE EXISTING TOP SOIL FROM SITE FREE OF ROOTS, ROCKS LARGER THAN ONE INCH, SUBSOIL DEBRIS, AND LARGE WEEDS UNLESS SPECIFIED OTHERWISE. MINIMUM 4" DEPTH TOPSOIL FOR ALL LAWN GRASS AREAS AND 12" DEPTH TOPSOIL FOR TREE, SHRUBS, AND PERENNIALS.
17. MULCH TO BE AT ALL TREE, SHRUB, PERENNIAL AND MAINTENANCE AREAS. TREE AND SHRUB PLANTING BEDS SHALL HAVE 4" DEPTH OF SHREDDED HARDWOOD MULCH SHREDDED HARDWOOD MULCH TO BE USED AROUND ALL PLANTS WITHIN TURF AREAS. PERENNIAL AND ORNAMENTAL GRASS BEDS SHALL HAVE 2" DEPTH SHREDDED HARDWOOD MULCH. MULCH TO BE FREE OF DELETERIOUS MATERIAL AND COLORED RED, OR APPROVED EQUAL. ROCK MULCH TO BE BUFF LIMESTONE, 1 1/2" TO 3" DIAMETER, AT MINIMUM 3" DEPTH, OR APPROVED EQUAL. ROCK MULCH TO BE ON COMMERCIAL GRADE FILTER FABRIC, BY TYPAR, OR APPROVED EQUAL WITH NO EXPOSURE. MULCH AND FABRIC TO BE APPROVED BY OWNER PRIOR TO INSTALLATION. MULCH TO MATCH EXISTING CONDITIONS (WHERE APPLICABLE).
18. EDGING TO BE COMMERCIAL GRADE VALLEY-VIEW BLACK DIAMOND (OR EQUAL) POLY EDGING OR SPADED EDGE, AS INDICATED. POLY EDGING SHALL BE PLACED WITH SMOOTH CURVES AND STAKED WITH METAL SPIKES NO GREATER THAN 4 FOOT ON CENTER WITH BASE OF TOP BEAD AT GRADE, FOR MOWERS TO CUT ABOVE WITHOUT DAMAGE. UTILIZE CURBS AND SIDEWALKS FOR EDGING WHERE POSSIBLE. SPADED EDGE TO PROVIDE V-SHAPED DEPTH AND WIDTH TO CREATE SEPARATION BETWEEN MULCH AND GRASS. INDIVIDUAL TREE, SHRUB, OR RAIN-GARDEN BEDS TO BE SPADED EDGE, UNLESS NOTED OTHERWISE. EDGING TO MATCH EXISTING CONDITIONS (WHERE APPLICABLE).
19. ALL DISTURBED AREAS TO BE SODDED OR SEEDED, UNLESS OTHERWISE NOTED. PARKING LOT ISLANDS TO BE SODDED WITH SHREDDED HARDWOOD MULCH AROUND ALL TREES AND SHRUBS. SOD TO BE STANDARD MINNESOTA GROWN AND HARDY BLUEGRASS MIX, FREE OF LAWN WEEDS. ALL TOPSOIL AREAS TO BE RAKED TO REMOVE DEBRIS AND ENSURE DRAINAGE. SLOPES OF 3:1 OR GREATER SHALL BE STAKED. SEED AS SPECIFIED AND PER MN/DOT SPECIFICATIONS. IF NOT INDICATED ON LANDSCAPE PLAN, SEE EROSION CONTROL PLAN.
20. PROVIDE IRRIGATION TO ALL PLANTED AREAS ON SITE. IRRIGATION SYSTEM TO BE DESIGN/BUILD BY LANDSCAPE CONTRACTOR. LANDSCAPE CONTRACTOR TO PROVIDE SHOP DRAWINGS TO LANDSCAPE ARCHITECT FOR APPROVAL PRIOR TO INSTALLATION OF IRRIGATION SYSTEM. CONTRACTOR TO PROVIDE OPERATION MANUALS, AS-BUILT PLANS, AND NORMAL PROGRAMMING. SYSTEM SHALL BE WINTERIZED AND HAVE SPRING STARTUP DURING FIRST YEAR OF OPERATION. SYSTEM SHALL HAVE ONE-YEAR WARRANTY ON ALL PARTS AND LABOR. ALL INFORMATION ABOUT INSTALLATION AND SCHEDULING CAN BE OBTAINED FROM THE GENERAL CONTRACTOR.
21. CONTRACTOR SHALL PROVIDE NECESSARY WATERING OF PLANT MATERIALS UNTIL THE PLANT IS FULLY ESTABLISHED OR IRRIGATION SYSTEM IS OPERATIONAL. OWNER WILL NOT PROVIDE WATER FOR CONTRACTOR.
22. REPAIR, REPLACE, OR PROVIDE SOD/SEED AS REQUIRED FOR ANY ROADWAY BOULEVARD AREAS ADJACENT TO THE SITE DISTURBED DURING CONSTRUCTION.
23. REPAIR ALL DAMAGE TO PROPERTY FROM PLANTING OPERATIONS AT NO COST TO OWNER.
24. RAIN GARDEN NOTE: PROVIDE AND INSTALL EROSION CONTROL BLANKET AT RAIN GARDEN AREA SIDE SLOPES AFTER ALL PLANTING HAVE BEEN INSTALLED. BLANKET TO BE ONE SEASON GEOJUTE, MN/DOT CATEGORY 2 (STRAW 1S, WOOD FIBER 1S), OR APPROVED EQUAL. BLANKET TO BE OVERLAPPED BY 4" AND ANCHORED BY SOD STAPLES. PLACE BLANKET PERPENDICULAR TO THE SLOPE. TRENCH IN EDGES OF BLANKET AREA TO PREVENT UNDER MINING. PROVIDE SILT FENCE AT TOP OF SLOPE AS NEEDED. SHREDDED HARDWOOD MULCH TO MATCH OTHER PROJECT PLANTING MULCH. PLACE 4" DEPTH OF MULCH AT ALL PLANTING AND EROSION CONTROL BLANKET AREA (NO FILTER FABRIC). SEE RAIN GARDEN DETAIL FOR FURTHER INFORMATION. RAIN GARDEN TO PROVIDE PROPER INFILTRATION AND DRAINAGE REQUIREMENTS PER ENGINEERS APPROVAL.

PLANTING DETAILS



N.T.S.

Westwood	DECIDUOUS TREE PLANTING	LAST REVISED: 10/19/18
		LA28

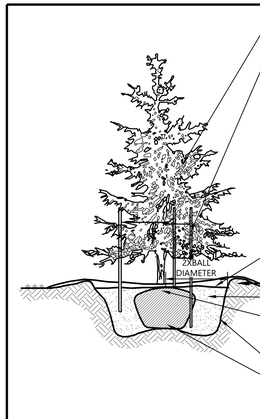

N.T.S.

Westwood	EVERGREEN TREE PLANTING	LAST REVISED: 10/19/18
		LA29

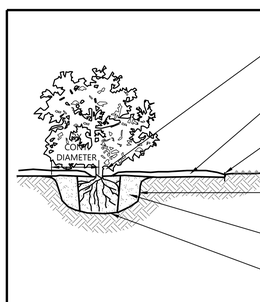

N.T.S.

Westwood	SHRUB & PERENNIAL CONTAINER PLANTING	LAST REVISED: 10/23/18
		LA27-C

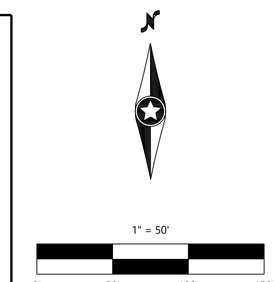

CONSTRUCTION PLANS

Call 48 Hours before digging:
811 or call811.com
Common Ground Alliance

N:\0024429.00\DWG\CIVIL\FINAL\LANDSCAPE\0024429L-PLF01.DWG

OAK CREEK

DESIGNED: .
CHECKED: .
DRAWN: .
HORIZONTAL SCALE: ##########
VERTICAL SCALE: ### OR ###

INITIAL ISSUE: 05/02/22
REVISIONS:
1 05/24/22 CITY COMMENTS
2 . .
3 . .
4 . .
5 . .

PREPARED FOR:

DR HORTON, INC. - MINNESOTA
20860 KENBRIDGE COURT, SUITE 100
LAKEVILLE, MINNESOTA 55044

I HEREBY CERTIFY THAT THIS PLAN WAS PREPARED BY ME OR UNDER MY DIRECT SUPERVISION AND THAT I AM A DULY LICENSED LANDSCAPE ARCHITECT UNDER THE LAWS OF THE STATE OF MINNESOTA
NICHOLAS T. MEYER
DATE: 05/24/22 LICENSE NO. 53774

OAK CREEK
CHASKA, MINNESOTA

Westwood
Phone (952) 937-5150 12701 Whitewater Drive, Suite #300
Fax (952) 937-5822 Minnetonka, MN 55343
Toll Free (888) 937-5150 westwoodps.com
Westwood Professional Services, Inc.

LANDSCAPE PLAN - NOTES - DETAILS

PROJECT NUMBER: 0024429.00

SHEET NUMBER: 6 OF 7
DATE: 05/24/22

© 2022 Westwood Professional Services, Inc.

TOT LOT & BENCHES PLAN

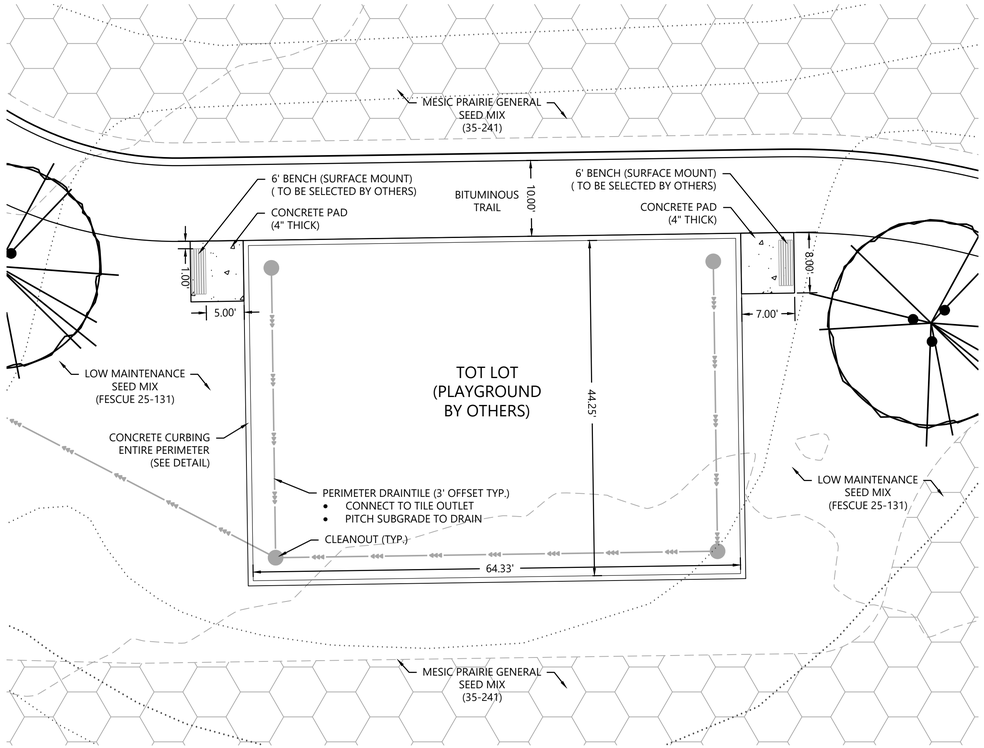

MONUMENT SIGN PLANTING PLAN

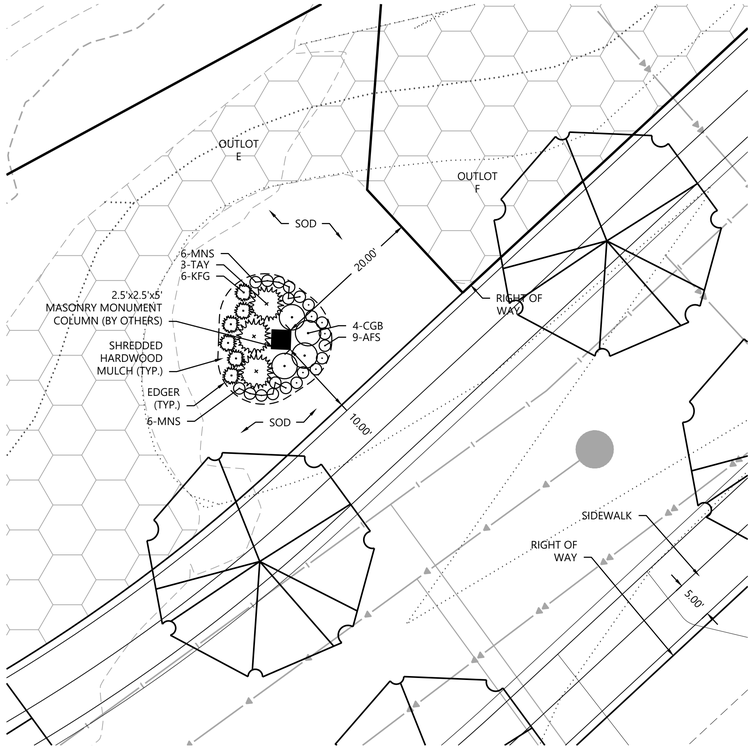

Call 48 Hours before digging:
811 or call811.com
Common Ground Alliance

MONUMENT SIGN PLANT SCHEDULE

CODE	QTY.	COMMON/BOTANICAL NAME	SIZE	SPACING O.C.
EVERGREEN SHRUBS	3			
TAY	3	Taunton Yew / Taxus medii 'Taunton'	#5 CONT.	4' O.C.
DECIDUOUS SHRUBS	4			
CGB	4	Chicagoland Green Boxwood / Buxus 'Glencoe'	#5 CONT.	3' O.C.
PERENNIALS	27			
MNS	12	May Night Salvia / Salvia x nemorosa 'May Night'	#1 CONT.	18" O.C.
AFS	9	Autumn Fire Sedum / Sedum x 'Autumn Fire'	#1 CONT.	18" O.C.
KFG	6	Karl Foerster Grass / Calamagrostis x acutiflora 'Karl Foerster'	#1 CONT.	24" O.C.

NOTES: QUANTITIES ON PLAN SUPERSEDE LIST QUANTITIES IN THE EVENT OF A DISCREPANCY.
REFER TO FINAL LANDSCAPE PLANS FOR SPECIES LOCATIONS AND QUANTITIES.

TOT LOT CURB & DRAINAGE DETAILS

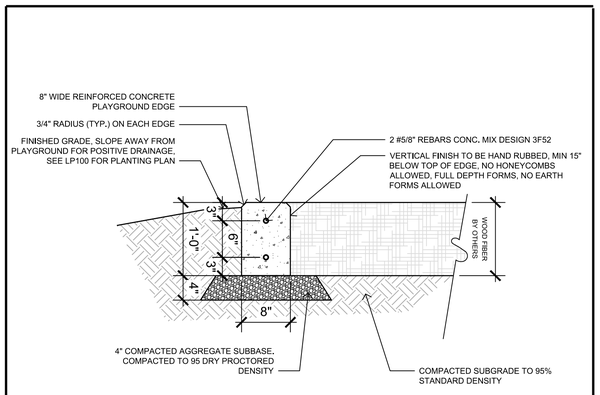

PLAYGROUND CURB — LAST REVISED: 08/11/21

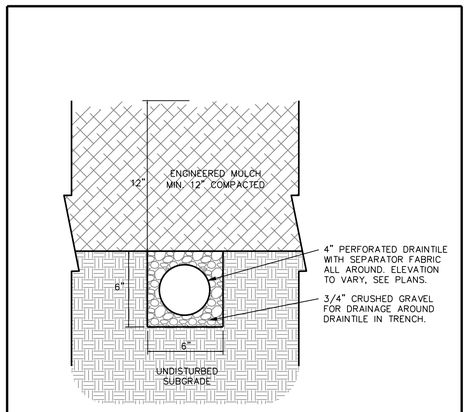

Westwood | TOT LOT DRAINTILE — LAST REVISED: 09/26/18 — LA33

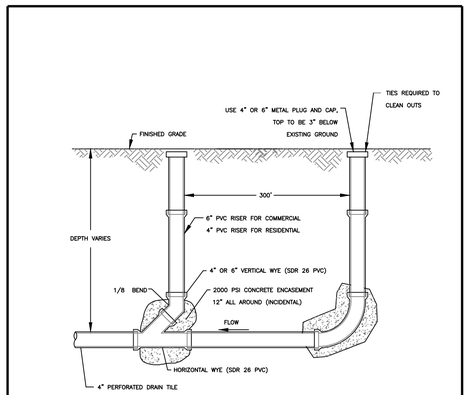

CLEAN OUT STRUCTURE — LAST REVISED: 08/11/21

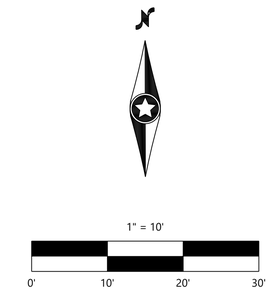

CONSTRUCTION PLANS

N:\0024429.00\DWG\CIVIL\FINAL\LANDSCAPE\0024429L-PLF01.DWG

OAK CREEK

DESIGNED: .
CHECKED: .
DRAWN: .
HORIZONTAL SCALE: ##########
VERTICAL SCALE: ### OR ###

INITIAL ISSUE: 05/02/22
REVISIONS:
1 05/24/22 CITY COMMENTS
2 . .
3 . .
4 . .
5 . .

PREPARED FOR:

DR HORTON, INC. - MINNESOTA
20860 KENBRIDGE COURT, SUITE 100
LAKEVILLE, MINNESOTA 55044

I HEREBY CERTIFY THAT THIS PLAN WAS PREPARED BY ME OR UNDER MY DIRECT SUPERVISION AND THAT I AM A DULY LICENSED LANDSCAPE ARCHITECT UNDER THE LAWS OF THE STATE OF MINNESOTA
NICHOLAS T. MEYER
DATE: 05/24/22 LICENSE NO. 53774

OAK CREEK
CHASKA, MINNESOTA

Westwood
Phone (952) 937-5150 12701 Whitewater Drive, Suite #300
Fax (952) 937-5822 Minnetonka, MN 55343
Toll Free (888) 937-5150 westwoodps.com
Westwood Professional Services, Inc.

LANDSCAPE DETAILS

SHEET NUMBER: 7 OF 7
PROJECT NUMBER: 0024429.00
DATE: 05/24/22

REQUEST FOR ACTION
CHASKA PLANNING COMMISSION
06/08/2022

Subject: **Rivertown Heights (Holasek) – Final Plat**

Applicant: D R Horton

Location: 3985 and 4245 Big Woods Blvd (Holasek); South of County Road 44 (Big Woods Blvd), west and south of Founders Ridge

Case No.: 2022-38

Synopsis: Applicant seeks to obtain approval of a final plat for 44 lots (83 new lots, 1 lot for the existing Holasek residence at 3985 Big Woods Blvd) in the SW Chaska area

Prepared By: Elizabeth Hanson

Staff Recommendation: Motion to recommend approval

BACKGROUND

Founders Ridge was approved in November 2013 and the 2nd addition in February 2015. The development has since been fully built. Within that development stub streets were provided to access neighboring properties for future development. One of those streets is Founders Path, which stubs up to the west edge of the development abutting Holasek's property. Another stub street, Carver Path, stubs on the south edge of the development, also abutting Scooter Enterprise's property.

In 2017, a purchase agreement was executed to purchase the future collector road right-of-way (ROW), community park and elementary school areas from the Holasek family. The City currently owns the ROW (~6 acres) and future community park acreage (~52 acres), while Eastern Carver County Schools owns the future elementary school acreage (~6). See below.

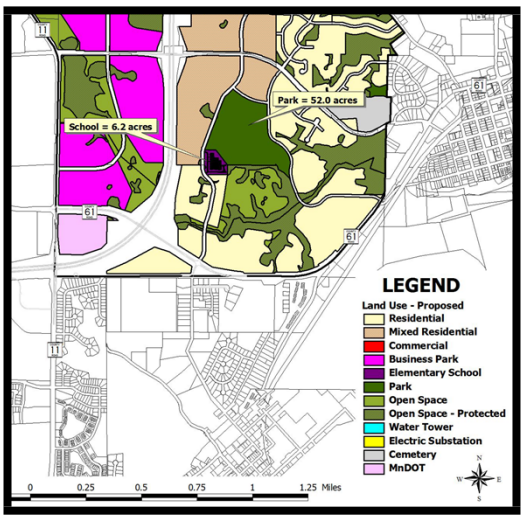

(exhbit used in 2017 Purchase Agreement)

Rivertown Heights is a residential proposal that abuts the north and east sides of the proposed community park. The Concept Plan for this residential proposal was approved in November 2021. The preliminary plat and rezoning were approved in March 2022.

Changes/Updates Since Preliminary Plan Approval
The following are changes that have occurred on the plan since Preliminary Plan:

- Future park signage; the City of Chaska will undertake the creation of the future park signage that will flank the edges of the proposed park area.

Project Goals
The identified goals in creating this new neighborhood include the following:

- Providing a seamless transition of road and pedestrian connections
- Housing design and lot sizes that will complement the existing homes in and around Rivertown Heights
- Creating a neighborhood layout that is sensitive to the existing conditions, including availability of utilities, natural grades and drainage patterns
- Preservation of trees and buffer to existing homes
- Attractive neighborhood design with curvilinear street patterns and sidewalks to support a walkable environment

Comprehensive Plan
The Comprehensive Plan guides this area to be Low Density Residential and Mixed Residential. The proposal tonight is consistent with this guidance.

CURRENT PROPOSAL
The proposal is for final plat. The 44-lot detached single-family proposal is located south of County Road 44 (Big Woods Blvd) and west & south of the Founders Ridge development on both Holasek and Scooter Enterprise's land. This new development will be an extension off Founders Path and Carver Path, but will not be part of the Founders Ridge development. The 44 lots are the first phase of the development. There will be 90 lots at full build-out.

Adjacent properties
The site is bound on the north by County Road 44 (Big Woods Boulevard); to the west by the future collector road ROW (Savanna Way) and land retained by the Holasek's; the south by future community park space and the Lano property; and the east by Founders Ridge and Carlson's land.

Existing Conditions
The overall Rivertown Heights area is nearly 40-acres and located near the southeast intersection of Big Woods Boulevard and the future extension of Savanna Way, just west of the existing Founders Ridge neighborhood. The site is currently used for agricultural purposes and the existing home at 3985 Big Woods Boulevard will be retained by the land seller, and incorporated into the development.

Generally, the site has minimal tree coverage, except in the southeast portion. The wooded ravine is proposed to remain to create a natural buffer between Rivertown Heights and the

existing Founders Ridge neighborhood. Tree removal will occur to extend Carver Path into the site.

A wetland investigation took place fall 2018 and Notice of Decision was received from the Board of Water and Soil Resources October 20, 2020. It was determined that there are 2 wetlands on the site. The total acreage of both is 0.24. The current plan proposes to impact both wetlands.

Land Use
The proposed plan consists of 44 new single family lots (including Holasek's existing residence and new lot) with a lot size of 65 feet wide and 140 feet deep (~0.21 acres). The homes in Founders Ridge that average out to be 75 feet wide and approximately 0.25 acres.

The parcels of land that this development encompasses are currently zoned Planned Residential Development (PRD-82).

Layout
The neighborhood will be accessed from Big Woods Boulevard via a road connection south of Percheron Boulevard, as well as extensions of Founders Path and Carver Path located in the Founders Ridge neighborhood. In the future, a connection will exist with the City's construction of a north/south collector road south of Big Woods Boulevard and Savanna Way. There are two cul de sacs proposed off the internal streets of the development. The Holasek residence at 3985 Big Woods Boulevard will be incorporated into the development between Lots 4 and 6 of Block 4. Street stubs will be provided on the west to the proposed collector road, the south to the Lano property, and on the east to the Carlson property. Sidewalks will be an extension of the existing Founders Ridge neighborhood.

The edges of the development are already generally defined due to the layout of the existing road stubs and proposed community park. In sum, the layout of the lots appear to be in a formation that meets what was anticipated for this area.

Transportation/ROW/Construction Traffic
The final plan proposes to provide for a network of internal residential roadways with connectivity to arterial roadways. Specifically, Founders Path is extended to the west to provide access to the development area. Founders Path will terminate at the western edge of the development to connect into the future collector road. The extension of Percheron Boulevard will act as the main north-south thoroughfare for the development and will stub on the south side as it abuts Lano's property. The existing driveway access on Big Woods Boulevard (CR 44) for Holasek's site will be removed and access will come from the new development off of Percheron Boulevard. Two stub streets will abut Carlson's property in the 2nd phase of the development. These stub streets will be temporary cul de sacs on the Holasek side until the Carlson site develops.

The current plan appears to show road right-of-way widths that are consistent with the City's typical 60 foot wide ROWs as they are matching up with the stub streets of Founders Path and Carver Path.

Construction traffic is proposed to come directly from County Road 44 at the proposed Percheron Boulevard access. The developer plans to put up signs in/near Founders Ridge so

that construction traffic does not go through this development. The developer will have to continue to work with the City Engineer and Carver County on the construction routes.

Utilities
Sewer and water utilities are available.

Stormwater
Stormwater ponding is proposed as a part of this proposal; 3 ponding areas have been delineated on the plan. Stormwater ponding will have to meet all Carver County WMO and City standards.

Setbacks
Minimum setbacks proposed are front setbacks of 25 feet, rear setbacks of 20 feet, side setbacks of 7.5 feet, and corner setbacks are 15 feet.

In addition to the above, the development must meet the following setbacks:

SETBACKS	
Direction	**Setback**
Wooded Steep Slopes	50 feet building setback and 30 feet no grade/no mow setback
Wetlands	30 feet
County Road 44	125 feet from centerline
Collector Road/Savanna Way	100 feet from centerline

Architecture & Anti Monotony
DR Horton will be the sole builder in this development. The proposed homes will be 1- and 2-story single family designs, which are similar to the homes DR Horton has built in Chaska in the Sagewood. They anticipate offering approximately 9 floor plans ranging in size from 1,900 to 3,400 square feet. Each floor plan will have multiple elevation options, which will create variety throughout. Pricing is anticipated to start in the lower $500,000s.

City ordinance dictates that housing may not be similar within two houses to each side, directly across the street or diagonal from the house in question. This ordinance also requires that homes provide LP Smartside on the front elevations, at least 4 inch window trim on all windows, and provide varied color packages on homes within one home on each side and directly across the street. In addition, 360 architecture will be required on homes/elevations on corners and/or homes/elevations that abut major roadways. This ordinance has been very successful in other newer residential developments.

The following lots were subject to 360 degree architecture per the final plat drawing of the development:

- Lots 1-11, Block 1
- Lots 1 & 8, Block 2

- Lots 1, 7, 9 & 16, Block 3
- Lots 1 & 8, Block 4

Trails & Sidewalks
There are no trails proposed as a part of this development application therefore trail fees will be required. The Comprehensive Plan calls out a trail along the future collector road. The trail has been installed on the east side of the collector road north of Big Woods Boulevard at 10 feet wide. The trail will travel south on the east side of the road and abut the west side of this proposed development. A public trail has also been installed on the north side of Big Woods Boulevard to the Highway 212 intersection when construction on County Road 44 was completed.

The developer will be required to provide sidewalks on both sides of the streets up to the bulbs of cul de sacs per City policy.

Screening, Landscaping & Tree Preservation
Because this development abuts major roadways (Big Woods Boulevard/CR 44 and the future collector road/Savanna Way) it will be important that the homes that back up to this use have adequate screening. The berming and landscaping done on both these roads in Founders Ridge and The Harvest shall be carried through with this development. The landscape plan shows consistency on these edges for homes abutting these roads.

Trees will be required in the boulevard in order to meet the City's Boulevard Tree Policy. It should be noted that the boulevard is the area between the sidewalk and the street.

The site area shows a couple areas of existing trees. One area on the southeast side that abuts Founders Ridge, and one area on the north side that abuts the existing Holasek home at 3985 Big Woods Boulevard. The southeasterly area will have a majority of trees preserved. The ones removed are due to required stormwater ponding and the extension of Carver Path to the south. The northerly area trees will also be removed due to required stormwater ponding. The northeast corner trees will be preserved in this area however. Staff had a chance to walk this northeasterly area and did not observe any significant quality trees worth saving (they are primarily boxelders). The developer will be providing new trees in this area to provide an adequate buffer to the nearest lot next to Big Woods Boulevard.

Ravines & Wooded Steep Slopes
The southeasterly portion of the site near the boundary of Founders Ridge and Rivertown Heights there is delineated wooded steep slopes. This is in the 2nd phase of the development, and not a part of the final plat request for the 1st addition. Some of this area has already been preserved and incorporated into the Founders Ridge development. There is a small finger area that encompasses the Rivertown Heights plan and will be preserved and setbacks applied. Staff would point out that the rear lot lines that abut this area should stay out of the 30 foot no grade/no mow setback so as to provide clear delineations of where yards can go. The developer has also indicated that buffer signage can also be installed along this edge to further protect these buffers.

Parkland
Parkland is not proposed as a part of this development. It will be required of the developer to pay park dedication fees. There is a community park (~52 acres) planned that is adjacent to this proposed development. This neighborhood would have direct access to this park.

Development Costs (Infrastructure Improvements)
The City of Chaska has a number of area-wide development cost such as, but not limited to:

- Arterial Road Network
- Collector Roads
- Storm Sewer
- Trails
- Parks

Prior to final platting, the developer will need to work with City Staff to determine which of these are applicable and what those fees will be.

Phasing
The site is planned to be graded in its entirety beginning Spring 2022. The 1st phase will be the northerly portion of the site up to Founders Path and consist of 44 lots. Street and utility construction of the 1st phase will be Summer with home construction beginning Fall 2022.

Dependent on market conditions, the 2nd phase of development is planned to occur in 2023.

Final Plat
The site is proposed to be platted into 44 single-family lots. There are a number of outlots as well, and their dispositions are as follows:

- Outlot A: stormwater ponding to be dedicated to the City of Chaska
- Outlot B: stormwater ponding to be dedicated to the City of Chaska
- Outlot C: area for future development to be owned by the developer

Deadline for Agency Actions
The City of Chaska received the complete application for this request on Wednesday, May 25, 2022. Pursuant to Minnesota State Statutes the City must act on this request by **Sunday, July 24, 2022** (60 days), unless the City provides the petitioner with written reasons for an additional 60-day review period. The additional review period would extend to *Thursday, September 22, 2022*. The City may with the petitioners consent extend the review period beyond the Thursday, September 22, 2022. Lastly, if the City denies the petitioners request "… it must state in writing the reasons for the denial at the time it denies the request."

PLANNING COMMISSION ACTION REQUESTED:
Motion to recommend to City Council approval of the Rivertown Heights Final Plat for 44 lots, subject to the following conditions:

1. Approvals shall be based on the following graphic exhibits:
    a. Final Plat (pgs 1-5), prepared by Westwood
    b. Cover, prepared by Westwood, dated May 25, 2022
    c. Grading Drainage and Erosion Control Plans – Overall, prepared by Westwood, dated May 25, 2022
    d. Grading Drainage and Erosion Control Plans (pgs 3-6), prepared by Westwood, dated May 25, 2022
    e. Street Profiles (pgs 7-8), prepared by Westwood, dated May 25, 2022

f. Details (pgs 9-10), prepared by Westwood, dated May 25, 2022
g. Tree Preservation Plan – Overall, prepared by Westwood, dated May 25, 2022
h. Tree Preservation Plan (pgs 12-16), prepared by Westwood, dated May 25, 2022
i. Seeding Plan, prepared by Westwood, dated May 25, 2022
j. Topsoil Management Plan, prepared by Westwood, dated May 25, 2022
k. Cover, prepared by Westwood, dated May 25, 2022
l. Overall, prepared by Westwood, dated May 25, 2022
m. Sanitary Sewer and Watermain Construction Plans (pgs 3-6), prepared by Westwood, dated May 25, 2022
n. Street and Storm Sewer Construction Plans (pgs 7-13), prepared by Westwood, dated May 25, 2022
o. Details (pgs 14-19), prepared by Westwood, dated May 25, 2022
p. Intersection Details (pgs 20-22), prepared by Westwood, dated May 25, 2022
q. Cover, prepared by Westwood, dated May 25, 2022
r. Overall Landscape Plan, prepared by Westwood, dated May 25, 2022
s. Landscape Plan (pgs 3-6), prepared by Westwood, dated May 25, 2022
t. Landscape Notes & Details, prepared by Westwood, dated May 25, 2022

2. Adherence with the Carver County Public Works Memo, dated November 4, 2021.
3. Preservation of the wooded steep slopes, including 30-foot buffer and a 50-foot setback from that wooded steep slope.
4. Adherence to the City's Boulevard Tree Policy and local street section design.
5. Provision that boulevard trees are placed between the sidewalk and street.
6. Provision of sidewalks on both sides of all local streets up to the bulb of cul de sacs.
7. Adherence to the following building setbacks:
    a. Front (house): 25 feet
    b. Rear: 20 feet
    c. Side(house/garage): 7.5 feet
    d. Side (corner): 15 feet
8. Adherence to the 125 foot centerline building setback from County Road 44.
9. Adherence to the 100 foot centerline building setback from the future collector road (Savanna Way).
10. Prior to final plat approval, developer shall enter into an agreement with the City for the provision of necessary infrastructure and associated development costs.
11. Compliance with the City's anti-monotony and design requirements zoning ordinance (Section 9.28).
12. Provision of developer responsibility to remove any hazardous trees or limbs on site as determined by the Public Works Director, prior to issuance of a building permit.
13. Provision of a storm water management plan meeting City and Carver County WMO standards.
14. No direct vehicular access onto County Road 44 or the future collector road/Savanna Way.
15. Provision that 360-degree architecture shall be provided for all corner lots and all lots whose rear or sides are visible from public right's-of-way or across from open spaces, more specifically for these lots as seen in the final plat of Rivertown Heights:
    a. Lots 1-11, Block 1
    b. Lots 1 & 8, Block 2
    c. Lots 1, 7, 9 & 16, Block 3
    d. Lots 1 & 8, Block 4

RIVERTOWN HEIGHTS

PLAT FILE NO.
C.R. DOC. NO.

KNOW ALL PERSONS BY THESE PRESENTS: *That D.R. Horton, Inc. - Minnesota, a Delaware corporation, owner of the following described property situated in the County of Carver, State of Minnesota, to wit:*

That part of the Northeast Quarter of Section 7, Township 115, Range 23, Carver County, Minnesota, EXCEPT that part lying westerly of the following described line:

Commencing at the East Quarter corner of said Section 7; thence North 89 degrees 48 minutes 03 seconds West assumed bearing along the South line of said Northeast Quarter, a distance of 1151.12 feet; thence South 00 degrees 11 minutes 57 seconds West, perpendicular to said South line of the Northeast Quarter, a distance of 223.00 feet to the South line of the North 223.00 feet of the Southeast Quarter of said Section 7; thence North 89 degrees 48 minutes 03 seconds West along said south line of the North 223.00 feet, a distance of 441.32 feet; thence South 20 degrees 29 minutes 12 seconds East, 96.03 feet to the point of beginning of the line to be described; thence North 20 degrees 29 minutes 12 seconds West, 147.34 feet; thence Northwesterly, Northerly, and Northeasterly 804.24 feet along a tangential curve concave to the East having a radius of 1060.00 feet and central angle of 43 degrees 28 minutes 17 seconds; thence North 20 degrees 06 minutes 37 seconds East not tangent to last described curve 825.06 feet; thence northeasterly 386.63 feet along a tangential curve concave to the southeast having a radius of 1060.00 feet and central angle of 20 degrees 53 minutes 53 seconds; thence North 41 degrees 00 minute 30 seconds East tangent to last described curve 135.56 feet; thence northeasterly and northerly 824.66 feet along a tangential curve concave to the northwest having a radius of 1140.00 feet and central angle of 41 degrees 26 minutes 49 seconds; thence North 00 degrees 26 minutes 19 seconds West tangent to last described curve 33.96 feet to the southerly right of way of County Road 140 and said line there terminating.

LESS and EXCEPT

That part of the Northeast Quarter (NE1/4) of Section Seven (7), Township One Hundred Fifteen (115), Range Twenty-three (23), Carver County, Minnesota; Commencing at the Northeast corner of said Section 7; thence South along Section line 4 chains and 81 links to a point; thence North 56 1/2 degrees West (variation 11 degrees east) 3 chains and 90 links to a point; thence North 66 1/2 degrees West 3 chains to a point; thence North 78 1/2 degrees West 5 chains and 30 links to a post; thence North 50 links to a point on the North line of said Section 7; thence East 10 chains and 48 links to place of beginning.

ALSO LESS and EXCEPT:

That part of the Northeast Quarter of Section 7, Township 115, Range 23, Carver County, Minnesota described as follows:

Commencing at the East Quarter corner of said Section 7; thence North 89 degrees 48 minutes 03 seconds West assumed bearing along the south line of said Northeast Quarter, a distance of 1151.12 feet to the point of beginning; thence continuing North 89 degrees 48 minutes 03 seconds West along said South line of the Northeast Quarter 508.85 feet to a point of intersection with a line hereinafter referred to as Line A; thence Northwesterly, Northerly, and Northeasterly 727.51 feet along said Line A to the North line of the South 709.00 feet of said Northeast Quarter; thence South 89 degrees 48 minutes 03 seconds East along said North line of the South 709.00 feet of the Northeast Quarter, a distance of 639.91 feet to the West line of the East 920.00 feet of said Northeast Quarter; thence South 00 degrees 10 minutes 04 seconds West along said West line of the East 920.00 feet to said South line of the Northeast Quarter; thence North 89 degrees 48 minutes 03 seconds West along said South line, 231.12 feet to the point of beginning, EXCEPTING that part of the Northeast Quarter of Section 7 Township 115, Range 23, Carver County Minnesota, described as follows: Commencing at the East quarter corner of said Section 7; thence North 89 degrees 48 minutes 03 seconds West assumed bearing along the South line of said Northeast Quarter, a distance of 1151.12 feet to the point of beginning; thence continuing North 89 degrees 48 minutes 03 seconds West along said south line of the Northeast Quarter 508.85 feet to a point of intersection with Line A; thence Northwesterly, Northerly and Northeasterly 364.85 feet along said Line A to the North line of the South 363.00 feet of said Northeast Quarter; thence South 89 degrees 48 minutes 03 seconds East along said North line of the South 363.00 feet of the Northeast Quarter, 237.59 feet; thence South 37 degrees 11 minutes 49 seconds East, 456.92 feet to the point of beginning. Aforementioned Line A is described as follows: Commencing at the East Quarter corner of said Section 7; thence North 89 degrees 48 minutes 03 seconds West assumed bearing along the south line of said Northeast Quarter, a distance of 1151.12 feet; thence South 00 degrees 11 minutes 57 seconds West, perpendicular to said south line of the Northeast Quarter, a distance of 223.00 feet to the south line of the North 223.00 feet of the Southeast Quarter of said Section 7; thence North 89 degrees 48 minutes 03 seconds West along said South line of the North 223.00 feet, a distance of 441.32 feet; thence South 20 degrees 29 minutes 12 seconds East, 96.03 feet to the point of beginning; thence North 20 degrees 29 minutes 12 seconds West, 147.34 feet; thence Northwesterly, Northerly, and Northeasterly 804.24 feet along a tangential curve concave to the East having a radius of 1060.00 feet and central angle of 43 degrees 28 minutes 17 seconds; thence North 20 degrees 06 minutes 37 seconds East not tangent to last described curve 825.06 feet; thence Northeasterly 386.63 feet along a tangential curve concave to the southeast having a radius of 1060.00 feet and central angle of 20 degrees 53 minutes 53 seconds; thence North 41 degrees 00 minute 30 seconds East tangent to last described curve 135.56 feet; thence Northeasterly and Northerly 824.66 feet along a tangential curve concave to the northwest having a radius of 1140.00 feet and central angle of 41 degrees 26 minutes 49 seconds; thence North 00 degrees 26 minutes 19 seconds West tangent to last described curve 33.96 feet to the southerly right of way of County Road 140 and said line there terminating.

ALSO LESS and EXCEPT:

The South 363.00 feet of the East 920.00 feet of the Northeast Quarter of Section 7, Township 115, Range 23, Carver County, Minnesota.

ALSO LESS and EXCEPT:

That part of the Northeast Quarter of Section 7, Township 115, Range 23, Carver County, Minnesota described as follows:

Commencing at the East Quarter corner of said Section 7; thence North 89 degrees 48 minutes 03 seconds West assumed bearing along the South line of said Northeast Quarter, a distance of 1151.12 feet to the point of beginning; thence continuing North 89 degrees 48 minutes 03 seconds West along said South line of the Northeast Quarter 508.85 feet to a point of intersection with a line hereinafter referred to as Line A; thence Northwesterly, Northerly, and Northeasterly 364.85 feet along said Line A to the North line of the South 363.00 feet of said Northeast Quarter; thence South 89 degrees 48 minutes 03 seconds East along said North line of the South 363.00 feet of the Northeast Quarter, 237.59 feet; thence South 37 degrees 11 minutes 49 seconds East, 456.92 feet to the point of beginning. Aforementioned Line A is described as follows: Commencing at the East Quarter corner of said Section 7; thence North 89 degrees 48 minutes 03 seconds West assumed bearing along the South line of said Northeast Quarter, a distance of 1151.12 feet; thence South 00 degrees 11 minutes 57 seconds West, perpendicular to said South line of the Northeast Quarter, a distance of 223.00 feet to the south line of the North 223.00 feet of the Southeast Quarter of said Section 7; thence North 89 degrees 48 minutes 03 seconds West along said South line of the North 223.00 feet, a distance of 441.32 feet; thence South 20 degrees 29 minutes 12 seconds East, 96.03 feet to the point of beginning; thence North 20 degrees 29 minutes 12 seconds West, 147.34 feet; thence Northwesterly, Northerly, and Northeasterly 804.24 feet along a tangential curve concave to the East having a radius of 1060.00 feet and central angle of 43 degrees 28 minutes 17 seconds; thence North 20 degrees 06 minutes 37 seconds East not tangent to last described curve 825.06 feet; thence Northeasterly 386.63 feet along a tangential curve concave to the Southeast having a radius of 1060.00 feet and central angle of 20 degrees 53 minutes 53 seconds; thence North 41 degrees 00 minute 30 seconds East tangent to last described curve 135.56 feet; thence Northeasterly and Northerly 824.66 feet along a tangential curve concave to the Northwest having a radius of 1140.00 feet and central angle of 41 degrees 26 minutes 49 seconds; thence North 00 degrees 26 minutes 19 seconds West tangent to last described curve 33.96 feet to the Southerly right of way of County Road 140 and said line there terminating.

ALSO LESS and EXCEPT:

That part of the Northeast Quarter of Section 7, Township 115, Range 23, Carver County, Minnesota described as follows:

Commencing at the East Quarter corner of said Section 7; thence North 00 degrees 10 minutes 04 seconds East, assumed bearing along the East line of said Northeast Quarter, 363.00 feet to the North line of the South 363.00 feet of said Northeast Quarter and the point of beginning; thence North 89 degrees 48 minutes 03 seconds West along said North line of the South 363.00 feet, a distance of 920.00 feet to the West line of the East 920.00 feet of said Northeast Quarter; thence North 00 degrees 10 minutes 04 seconds East along said West line of the East 920.00 feet of the Northeast Quarter, 346.00 feet to the North line of the South 709.00 feet of said Northeast Quarter; thence North 89 degrees 48 minutes 03 seconds West along said North line of the South 709.00 feet of the Northeast Quarter, a distance of 639.91 feet to a line hereinafter referred to as Line A; thence Northeasterly along said Line A, a distance of 455.21 feet to the North line of the South 1137.00 feet of said Northeast Quarter; thence South 89 degrees 48 minutes 03 seconds East along said North line of the South 1137.00 feet, thereof, a distance of 481.04 feet to said West line of the East 920.00 feet of the Northeast Quarter; thence South 00 degrees 10 minutes 04 seconds West along said West line of the East 920.00 feet of the Northeast Quarter, a distance of 100.00 feet to the North line of the South 1037.00 feet of said Northeast Quarter, thereof; thence South 89 degrees 48 minutes 03 seconds East along said North line of the South 1037.00 feet, a distance of 748.54 feet; thence South 01 degrees 25 minutes 56 seconds East, 293.82 feet; thence Southeasterly 321.00 feet along a tangential curve concave to the northeast having a radius of 300.00 feet and central angle of 61 degrees 18 minutes 28 seconds to said East line of the Northeast Quarter; thence South 00 degrees 10 minutes 04 seconds West along said East line, a distance of 121.68 feet to the point of beginning. Aforementioned Line A is described as follows: Commencing at the East Quarter corner of said Section 7; thence North 89 degrees 48 minutes 03 seconds West assumed bearing along the South line of said Northeast Quarter, a distance of 1151.12 feet; thence South 00 degrees 11 minutes 57 seconds West, perpendicular to said South line of the Northeast Quarter, a distance of 223.00 feet to the south line of the North 223.00 feet of the Southeast Quarter of said Section 7; thence North 89 degrees 48 minutes 03 seconds West along said south line of the North 223.00 feet, a distance of 441.32 feet; thence South 20 degrees 29 minutes 12 seconds East, 96.03 feet to the point of beginning; thence North 20 degrees 29 minutes 12 seconds West, 147.34 feet; thence Northwesterly, Northerly, and Northeasterly 804.24 feet along a tangential curve concave to the east having a radius of 1060.00 feet and central angle of 43 degrees 28 minutes 17 seconds; thence North 20 degrees 06 minutes 37 seconds East not tangent to last described curve 825.06 feet; thence Northeasterly 386.63 feet along a tangential curve concave to the Southeast having a radius of 1060.00 feet and central angle of 20 degrees 53 minutes 53 seconds; thence North 41 degrees 00 minute 30 seconds East tangent to last described curve 135.56 feet; thence Northeasterly and Northerly 824.66 feet along a tangential curve concave to the northwest having a radius of 1140.00 feet and central angle of 41 degrees 26 minutes 49 seconds; thence North 00 degrees 26 minutes 19 seconds West tangent to last described curve 33.96 feet to the southerly right of way of County Road 140 and said line there terminating.

ALSO LESS and EXCEPT:

That part of the Northeast Quarter of Section 7, Township 115, Range 23, Carver County, Minnesota, described as follows:

Beginning at the Northwest corner of the South 1037.00 feet of the East 920.00 feet of said Northeast Quarter, thence North 00 degrees 10 minutes 04 seconds East assumed bearing along West line of said East 920.00 feet of the Northeast Quarter, 100.00 feet to the North line of the South 1137.00 feet of said Northeast Quarter; thence North 89 degrees 48 minutes 03 seconds West along said north line of the South 1137.00 feet of the Northeast Quarter, 481.04 feet to a line hereinafter referred to as Line A; thence North 20 degrees 06 minutes 37 seconds East along said Line A, 253.88 feet; thence Northeasterly 386.63 feet along said Line A and along a tangential curve concave to the Southeast having a radius of 1060.00 feet and central angle of 20 degrees 53 minutes 53 seconds; thence North 41 degrees 00 minute 30 seconds East along said Line A, tangent to last described curve 135.56 feet; thence Northeasterly 41.94 feet along said Line A and along a tangential curve concave to the Northwest having a radius of 1140.00 feet and central angle of 02 degrees 06 minutes 29 seconds; thence South 46 degrees 24 minutes 01 seconds East, not tangent to last described curve, a distance of 33.40 feet; thence Southeasterly 880.67 feet along a tangential curve concave to the Northeast having a radius of 1200.00 feet, and central angle of 42 degrees 02 minutes 56 seconds; thence South 01 degrees 25 minutes 56 seconds East not tangent to last described curve, 454.76 feet to the North line of said South 1037.00 feet of the Northeast Quarter; thence North 89 degrees 48 minutes 03 seconds West along said North line of the South 1037.00 feet of the Northeast Quarter, a distance of 748.54 feet to the point of beginning. Aforementioned Line A is described as follows: Commencing at the East Quarter corner of said Section 7; thence North 89 degrees 48 minutes 03 seconds West assumed bearing along the South line of said Northeast Quarter, a distance of 1151.12 feet; thence South 00 degrees 11 minutes 57 seconds West, perpendicular to said South line of the Northeast Quarter, a distance of 223.00 feet to the South line of the North 223.00 feet of the Southeast Quarter of said Section 7; thence North 89 degrees 48 minutes 03 seconds West along said South line of the North 223.00 feet, a distance of 441.32 feet; thence South 20 degrees 29 minutes 12 seconds East, 96.03 feet to the point of beginning; thence North 20 degrees 29 minutes 12 seconds West, 147.34 feet; thence Northwesterly, Northerly, and Northeasterly 804.24 feet along a tangential curve concave to the east having a radius of 1060.00 feet and central angle of 43 degrees 28 minutes 17 seconds; thence North 20 degrees 06 minutes 37 seconds East not tangent to last described curve 825.06 feet; thence Northeasterly 386.63 feet along a tangential curve concave to the Southeast having a radius of 1060.00 feet and central angle of 20 degrees 53 minutes 53 seconds; thence North 41 degrees 00 minute 30 seconds East tangent to last described curve 135.56 feet; thence Northeasterly and Northerly 824.66 feet along a tangential curve concave to the Northwest having a radius of 1140.00 feet and central angle of 41 degrees 26 minutes 49 seconds; thence North 00 degrees 26 minutes 19 seconds West tangent to last described curve 33.96 feet to the Southerly right of way of County Road 140 and said line there terminating.

LESS AND EXCEPT

Parcel 4B, CARVER COUNTY RIGHT OF WAY PLAT NO. 28, according to the recorded plat thereof, Carver County, Minnesota.

TOGETHER WITH

Outlot D, Founders Ridge, according to the recorded plat thereof, Carver County, Minnesota, EXCEPT that part of Outlot D, Founders Ridge, described as follows: Beginning at the Southwest corner of said Outlot D; thence South 88 degrees 57 minutes 33 seconds East, assumed bearing along the South line of said Outlot D, a distance of 496.78 feet; thence North 21 degrees 57 minutes 12 seconds West, 182.72 feet; thence Northwesterly 85.31 feet along a tangential curve concave to the Northeast having a radius of 630.00 feet and central angle of 07 degrees 45 minutes 31 seconds; thence North 14 degrees 11 minutes 40 seconds West tangent to last described curve, 119.52 feet; thence Northwesterly and Northerly 263.90 feet along a tangential curve concave to the East having a radius of 630.00 feet, and central angle of 24 degrees 00 minutes 03 seconds; thence North 09 degrees 48 minutes 23 seconds East tangent to last described curve, 36.54 feet; thence Northerly and Northwesterly 550.03 feet along a tangential curve concave to the Southwest having a radius of 400.00 feet and central angle of 78 degrees 47 minutes 12 seconds; thence North 68 degrees 58 minutes 49 seconds West, tangent to last described curve, 87.15 feet; thence Northwesterly 32.68 feet along a tangential curve concave to the Northeast having a radius of 300.00 feet and central angle of 06 degrees 14 minutes 28 seconds to the West line of said Outlot D; thence South 00 degrees 10 minutes 04 seconds West along said West line, 484.68 feet to an angle point and said point being the West Quarter corner of Section 8, Township 115, Range 23, said Carver County, Minnesota; thence South 00 degrees 29 minutes 09 seconds West along said West line of Outlot D, 656.63 feet to the point of beginning.

TOGETHER WITH

That part of Lot 1, Block 1, FOUNDERS RIDGE, according to the recorded plat thereof, Carver County, Minnesota, lying northerly and northeasterly of the following described line:

Commencing at the southwest corner of said Lot 1; thence North 00 degrees 10 minutes 04 seconds East, assumed bearing along the west line of said Lot 1, a distance of 295.56 feet to the point of beginning of the line to be described; thence South 89 degrees 49 minutes 56 seconds East, a distance of 84.84 feet; thence South 29 degrees 04 minutes 07 seconds East, a distance of 286.40 feet to the southeasterly line of said Lot 1 and said line there terminating

KNOW ALL PERSONS BY THESE PRESENTS: *That James Joseph Holasek and Laura Jean Holasek, a married couple, owners of the following described property situated in the County of Carver, State of Minnesota, to wit:*

That part of Lot 1, Block 1, FOUNDERS RIDGE, according to the recorded plat thereof, Carver County, Minnesota, EXCEPT that part lying northerly and northeasterly of the following described line:

Commencing at the southwest corner of said Lot 1; thence North 00 degrees 10 minutes 04 seconds East, assumed bearing along the west line of said Lot 1, a distance of 295.56 feet to the point of beginning of the line to be described; thence South 89 degrees 49 minutes 56 seconds East, a distance of 84.84 feet; thence South 29 degrees 04 minutes 07 seconds East, a distance of 286.40 feet to the southeasterly line of said Lot 1 and said line there terminating.

KNOW ALL PERSONS BY THESE PRESENTS: *That Holasek Land Management, Inc., a Minnesota corporation, owner of the following described property situated in the County of Carver, State of Minnesota, to wit:*

That part of Parcel 4B, CARVER COUNTY RIGHT OF WAY PLAT NO. 28, according to the recorded plat thereof, Carver County, Minnesota, lying easterly of a line 80.00 feet to the left of the following described line, hereinafter known as Line "A":

Commencing at the East Quarter corner of Section 7, Township 115, Range 23; thence North 89 degrees 48 minutes 03 seconds West assumed bearing along the South line of said Northeast Quarter, a distance of 1151.12 feet; thence South 00 degrees 11 minutes 57 seconds West, perpendicular to said South line of the Northeast Quarter, a distance of 223.00 feet to the South line of the North 223.00 feet of the Southeast Quarter of said Section 7; thence North 89 degrees 48 minutes 03 seconds West along said south line of the North 223.00 feet, a distance of 441.32 feet; thence South 20 degrees 29 minutes 12 seconds East, 96.03 feet to the point of beginning of said Line "A"; thence North 20 degrees 29 minutes 12 seconds West, 147.34 feet; thence Northwesterly, Northerly, and Northeasterly 804.24 feet along a tangential curve concave to the East having a radius of 1060.00 feet and central angle of 43 degrees 28 minutes 17 seconds; thence North 20 degrees 06 minutes 37 seconds East not tangent to last described curve 825.06 feet; thence northeasterly 386.63 feet along a tangential curve concave to the southeast having a radius of 1060.00 feet and central angle of 20 degrees 53 minutes 53 seconds; thence North 41 degrees 00 minute 30 seconds East tangent to last described curve 135.56 feet; thence northeasterly and northerly 824.66 feet along a tangential curve concave to the northwest having a radius of 1140.00 feet and central angle of 41 degrees 26 minutes 49 seconds; thence North 00 degrees 26 minutes 19 seconds West tangent to last described curve, 73.56 feet to the north line of the Northeast Quarter of said Section 7 and said Line "A" terminating.

Have caused the same to be surveyed and platted as ***RIVERTOWN HEIGHTS*** *and do hereby donate and dedicate to the public for public use forever the public ways and also dedicates the easements as shown on this plat for drainage and utility purposes only.*

Westwood
Professional Services, Inc.

RIVERTOWN HEIGHTS

PLAT FILE NO.
C.R. DOC. NO.

In witness whereof said D.R. Horton, Inc. - Minnesota, a Delaware corporation, has caused these presents to be signed by its proper officer this _____ day of _____, 20_____.

D.R. HORTON, INC. - MINNESOTA

By _____

Its _____

***STATE OF** _____*
***COUNTY OF** _____*
The foregoing instrument was acknowledged before me this _____ day of _____, 20_____, by _____, its _____ of D.R. Horton, Inc. - Minnesota, a Delaware corporation, on behalf of the corporation.

_____ _____
(Signature) *(Name Printed)*

Notary Public, _____ County, Minnesota

My Commission Expires _____

In witness whereof said James Joseph Holasek and Laura Jean Holasek, a married couple, have hereunto set their hand this _____ day of _____ 20_____.

_____ _____
James Joseph Holasek *Laura Jean Holasek*

***STATE OF** _____*
***COUNTY OF** _____*
The foregoing instrument was acknowledged before me this _____ day of _____, 20_____, by James Joseph Holasek and Laura Jean Holasek, a married couple.

_____ _____
(Signature) *(Name Printed)*

Notary Public, _____ County, Minnesota

My Commission Expires _____

In witness whereof said Holasek Land Management, Inc., a Minnesota corporation, has caused these presents to be signed by its proper officer this _____ day of _____, 20_____.

HOLASEK LAND MANANGMENT, INC.

By _____

Its _____

***STATE OF** _____*
***COUNTY OF** _____*
The foregoing instrument was acknowledged before me this _____ day of _____, 20 _____, by _____, its _____ of Holasek Land Management, Inc., a Minnesota corporation, on behalf of the corporation.

_____ _____
(Signature) *(Name Printed)*

Notary Public, _____ County, Minnesota

My Commission Expires _____

I, Mathew J. Welinski, do hereby certify that this plat was prepared by me or under my direct supervision; that I am a duly Licensed Land Surveyor in the State of Minnesota; that this plat is a correct representation of the boundary survey; that all mathematical data and labels are correctly designated on this plat; that all monuments depicted on this plat have been, or will be correctly set within one year; that all water boundaries and wet lands, as defined in Minnesota Statutes, Section 505.01, Subd. 3, as of the date of this certificate are shown and labeled on this plat; and all public ways are shown and labeled on this plat.

Dated this _____ day of _____, 20_____.

_____
Mathew J. Welinski, Licensed Land Surveyor
Minnesota License No. 53596

STATE OF MINNESOTA
***COUNTY OF** _____*
This instrument was acknowledged before me on _____ by Mathew J. Welinski, Licensed Land Surveyor, Minnesota License No. 53596.

_____ _____
(Signature) *(Name Printed)*

Notary Public, _____ County, Minnesota

My Commission Expires _____

CITY COUNCIL, CITY OF CHASKA, MINNESOTA
*This plat of **RIVERTOWN HEIGHTS** was approved and accepted by the City Council of the City of Chaska, Minnesota at a regular meeting thereof held this _____ day of _____ _____, 20_____, and said plat is in compliance with the provisions of Minnesota Statutes, Section 505.03, Subd. 2.*

City Council, City of Chaska, Minnesota

By: _____ *By: _____*

CARVER COUNTY BOARD OF COMMISSIONERS
*This plat of **RIVERTOWN HEIGHTS** was approved and accepted by the Board of Commissioners of Carver County, Minnesota, at a regular meeting held this _____ day of _____, 20 _____, and is in compliance with the provisions of Minnesota Statutes Chapter 505.03, Subd. 2. All monuments will be set as specified by the County Board and as stated on this plat, according to Minnesota Statute, 505.02, Subd. 1.*

_____ *Attest _____*
Chair, County board

COUNTY SURVEYOR, Carver County, Minnesota
Pursuant to Chapter 395, Minnesota Laws of 1971, this plat has been approved this _____ day of _____, 20_____.

_____
Brian Praske, County Surveyor

COUNTY AUDITOR, Carver County, Minnesota
I hereby certify that taxes payable in 20_____ and prior years have been paid for land described on this plat. Dated this _____ day of _____, 20___.

_____
Crystal Campos, County Auditor

COUNTY RECORDER, Carver County, Minnesota
*I hereby certify that this plat of **RIVERTOWN HEIGHTS** was filed this _____ day of _____, 20_____, at _____ o'clock _____.M., as Document No. _____.*

_____
Kaaren Lewis, County Recorder

Westwood
Professional Services, Inc.

RIVERTOWN HEIGHTS

PLAT FILE NO.
C.R. DOC. NO.

DETAIL B
(SEE SHEET 5 OF 5 SHEETS)

INSET A
(SEE SHEET 4 OF 5 SHEETS)

DETAIL A

FOUNDERS RIDGE
OUTLOT D
OUTLOT C
OUTLOT B
OUTLOT A
BLOCK 1
LOT 4
LOT 5
FOUNDERS RIDGE 2ND ADDDITION
FOUNDERS PATH
PERCHERON BOULEVARD
DEVONSHIRE LANE
CAMDEN CIRCLE
CSAH NO. 44 (BIG WOODS BOULEVARD)
PARCEL 48
EXCEPTION
NORTHEAST QUARTER OF SEC. 7, TWP. 115, RGE. 23

N07°57'43"E 1087.39
Fd. LS #23021
Easterly line of Outlot D
Northeasterly line of Outlot D
N66°36'55"W 951.92
Fd. LS #23021
N09°48'23"E 36.54
L=263.90
R=630.00
Δ=24°00'03"
N14°11'40"W 119.52
L=85.31
R=630.00
Δ=7°45'31"
182.72
N21°57'12"W
234.31
S88°57'33"E
South line of Outlot D
S88°57'33"E 496.78
N68°58'49"W 87.15
L=550.03
R=400.00
Δ=78°47'12"
Fd. LS #23021
Fd. LS #42299
Δ=6°14'26"
L=32.68
121.67
S00°10'04"W
N00°10'04"E 363.00
S00°29'09"W 656.63
West line of Outlot D
SW Cor of Outlot D, FOUNDERS RIDGE
East 1/4 Cor of Sec. 7, Twp. 115, Rge. 23 Fd. 4 Inch Cast Iron Monument
363
EXCEPTION
S00°10'04"W 875.00
East line of the NE 1/4 of Sec. 7
CB=S35°12'19"E
Δ=67°33'02"
R=300.00
L=353.69
L=321.02
Δ=61°18'36"
182.94
N89°49'56"W
43.34
421.41
S01°25'56"E 464.76
(454.76 Deed)
293.82
S01°25'56"E
EXCEPTION
EXCEPTION
EXCEPTION
920
S89°48'03"E 920.00
North line of the South 363.00 ft of the NE 1/4 of Sec. 7
South line of the NE 1/4 of Sec. 7
N89°48'03"W 1151.12
1037
363
North line of the South 1037.00 ft of the NE 1/4 of Sec. 7
S89°48'03"E 748.54
(748.54 Deed)
N89°48'03"W 748.82
S00°10'04"W 100.00
NW Cor of the South 1037.00 ft of the East 920.00 Ft of the NE 1/4 of Sec. 7
West line of the East 920.00 ft of the NE 1/4 of Sec. 7
346.00
N00°10'04"E 709.00
West line of the East 920.00 ft of the NE 1/4 of Sec. 7
231.12
1137
709
North line of the South 1137.00 ft of the NE 1/4 of Sec. 7
North line of the South 709.00 ft of the NE 1/4 of Sec. 7
(481.04 Deed)
S89°48'03"E 484.66
S89°48'03"E 639.91
S00°11'57"W 223.00
223
South line of the North 223.00 ft of the SE 1/4 of Sec. 7
S37°11'49"E 456.92
N89°48'03"W 508.85
N89°48'03"W 441.32
S89°48'03"E 232.59
363
Point not Tangent
Δ=13°54'34"
L=257.33
105.34
Δ=19°43'16"
L=364.85
L=804.24
R=1060.00
Δ=43°28'17"
S20°29'12"E 96.03
141.34
N20°29'12"W
EXCEPTION
EXCEPTION
EXCEPTION
EXCEPTION
EXCEPTION
EXCEPTION
L=386.63
R=1060.00
Δ=20°53'33"
(253.88 Deed)
264.51
N20°06'37"E 825.06
455.21
L=824.66
R=1140.00
Δ=41°26'49"
L=782.72
R=1140.00
Δ=39°20'21"
CB=N19°13'51"E
L=680.67
R=1200.00
Δ=32°30'36"
CB=S6°25'29"E
S46°24'01"E 33.40
Δ=2°06'29"
L=41.94
135.36
N41°00'30"E
L=80.21
R=1339.96
Δ=3°25'47"
CB=N86°24'38"W
58.59
N00°26'19"W
(33.96 Deed)
N00°26'19"W 9.34 (Meas)
(50 Links Deed)
N00°10'04"E 18.88
N89°33'42"E 95.57
N00°10'04"E 21.64
CB=N49°28'05"W
Δ=12°31'30"
R=1244.68
L=272.09
N43°12'20"W 220.50
N25°45'30"E 363.06
Southeasterly line of Lot 1
N29°04'07"W 286.40
201.53
N89°00'30"W
West line of Lot 1
S89°48'56"E 84.84
SW Cor of Lot 1, Block 1, FOUNDERS RIDGE Fd. LS #23021
295.56
N00°10'04"E
365.22
N00°10'04"E
(4 Chains & 81 Links Deed)
S00°10'04"W 317.46
NE Cor of Sec. 7, Twp. 115, Rge. 23 Fd. 4 Inch Cast Iron Monument
(10 Chains & 48 Links Deed)
N89°33'42"E 739.04
North line of the NE 1/4 of Sec. 7
(N68°30'W 3 Chains Deed)
N68°19'56"W 198.00
(N78°30'W 5 Chains Deed)
N78°19'56"W 349.80
(80 Links Deed)
N35°19'56"W 257.40
EXCEPTION
(3 Chains Deed)
N00°10'04"E 180.00

- SET 1/2" BY 14" IRON PIPE WITH CAP #53596
- FOUND MONUMENT AS NOTED ON SURVEY
- FOUND CARVER COUNTY CAST IRON MONUMENT

THE SOUTH LINE OF THE NORTHEAST QUARTER OF SECTION 7, TOWNSHIP 115, RANGE 23, HAS A BEARING OF N 89°48'03" W (CARVER COUNTY, NAD83 (1986AD))

VICINITY MAP
(NOT TO SCALE)

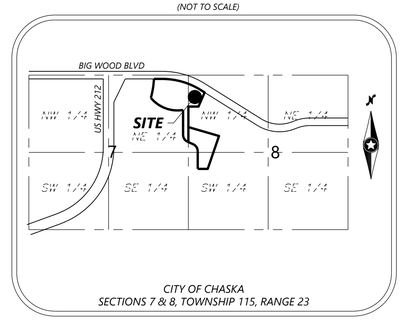

CITY OF CHASKA
SECTIONS 7 & 8, TOWNSHIP 115, RANGE 23

SCALE IN FEET

0 150 300 450

SCALE: 1 INCH = 150 FEET

Westwood
Professional Services, Inc.

RIVERTOWN HEIGHTS

PLAT FILE NO.
C.R. DOC. NO.

N89°33'42"E 95.57
N00°10'04"E 18.88
N00°26'19"W 58.59
N78°19'56"W 349.80
L=80.21
R=1339.96
Δ=3°25'47"
CB=N86°24'38"W
N00°26'19"W 9.34
L=319.02
Δ=16°02'02"
N74°14'55"E 146.13
75.71
109.66
S86°10'32"E 64.66
Δ=7°00'44"
R=1435.00
L=175.62
L=114.46
Δ=4°34'12"
S71°13'09"E 113.93
34.88
L=61.17
Δ=2°26'32"
33.60
C.S.A.H. NO. 44 (BIG WOODS BOULEVARD)
N66°19'56"W 198.00
Δ=16°38'33"
R=1946.00
L=565.24
N56°19'56"W 257.40
L=560.90
Δ=16°30'52"
N00°10'04"E 21.64
Δ=5°37'42"
L=123.27
CB=N49°38'05"W
Δ=12°31'30"
R=1244.68
L=272.09
36.47
10
L=188.51
Δ=9°08'35"
S27°13'57"E 231.80
N18°54'01"E 213.71
Δ=0°07'40"
L=4.34
N18°54'01"E 266.26
Drainage & Utility Easement
1
10
11
9
Drainage & Utility Easement
S71°04'18"E 141.01
Δ=40°20'20"
L=42.24
Δ=88°02'39"
L=92.20
Δ=41°34'37"
L=47.54
L=264.32
R=60.00
Δ=252°24'09"
S74°52'34"E 10.00
S65°05'15"E 2.28
L=68.40
Δ=3°24'29"
Δ=17°54'53"
L=18.76
8
Δ=15°38'33"
R=75.00
L=20.48
N71°04'18"W 28.00
S71°04'18"E 138.62
L=54.60
Δ=2°44'39"
L=13.04
Δ=0°38'59"
7
Drainage & Utility Easement
23.72
2.89
N80°25'48"E 145.34
S18°55'42"W 145.34
S14°18'42"E 60.00
L=67.57
Δ=64°31'40"
Δ=3°49'36"
L=5.01
CB=N19°13'51"E
Δ=39°20'21"
R=1140.00
L=782.72
L=82.80
Δ=3°06'41"
S71°04'18"E 148.06
11.71
6
Drainage & Utility Easement
68.00
CAMDEN CIRCLE
R=75.00
L=69.30
Δ=52°56'00"
N65°05'30"W 124.25
2.89
1
Drainage & Utility Easement
S68°29'57"E 148.00
L=62.34
Δ=3°07'59"
L=62.34
Δ=2°34'22"
L=57.83
L=62.34
Δ=3°07'59"
L=70.43
5
L=36.28
Δ=1°32'56"
N65°05'30"W 147.34
65.50
S24°54'30"W 102.25
L=61.94
Δ=3°29'54"
N65°05'30"W 140.98
3
2
2
L=139.66
Δ=6°00'07"
L=62.34
Δ=3°07'59"
S65°21'58"E 148.00
Drainage & Utility Easement
4
L=62.34
Δ=3°07'59"
L=70.43
L=62.34
Δ=3°07'59"
L=70.43
S62°13'59"E 148.00
1
3
L=62.38
Δ=3°08'44"
L=70.71
S59°06'00"E 148.00
70.50
Drainage & Utility Easement
5
S24°54'30"W 130.11
69.68
6
S23°45'10"W 130.82
68.08
S67°20'43"E
2
Drainage & Utility Easement
7
S20°10'56"W 130.00
S71°37'27"E 162.16
68.91
93.25
8
S16°34'10"W 130.00
5.80
Δ=3°54'28"
L=83.41
Δ=8°04'23"
L=72.39
S77°20'18"E 35.38
Δ=0°37'07"
L=13.00
Δ=3°18'39"
L=70.67
Δ=3°23'19"
L=72.33
Δ=3°34'14"
L=76.21
Δ=3°36'46"
L=77.12
124.75
N58°55'46"W 148.78
L=79.57
Δ=3°39'59"
L=62.38
Δ=3°08'44"
L=70.71
L=62.38
Δ=3°08'44"
L=70.71
S55°57'16"E 148.00
2
Drainage & Utility Easement
1
L=79.57
Δ=3°39'59"
L=111.61
Δ=4°48'54"
L=100.24
L=111.61
Δ=4°48'54"
L=100.24
L=140.13
Δ=5°58'58"
1
N31°04'14"E 140.00
35.63
83.48
L=275.60
Δ=12°00'30"
L=188.51
Δ=9°08'35"
L=188.51
Δ=9°08'35"
L=215.22
L=111.15
Δ=4°44'43"
Drainage & Utility Easement
16
15
14
13
12
11
10
9
3
2
3
4
5
6
7
8
L=64.75
Δ=2°52'58"
L=29.29
Δ=1°18'52"
L=64.25
Δ=2°52'58"
L=64.25
Δ=2°52'58"
L=64.09
Δ=2°52'38"
L=64.09
Δ=2°52'32"
L=124.16
Δ=5°34'15"
5.80
L=82.56
Δ=5°22'32"
L=401.63
R=1250.00
Δ=18°24'32"
S77°20'18"E 35.38
DEVONSHIRE LANE
79.13
16.98
68.14
62.22
201.85
S58°53'46"E
16.91
54.60
62.65
62.55
125.18
S68°24'25"E
71.38
63.63
36.90
34.29
62.86
90.45
62.06
261.30
128.80
104.78
124.74
S73°35'56"E
70.41
S84°28'19"E 131.26
S84°28'19"E 138.85
L=36.58
Δ=2°22'54"
Δ=4°34'44"
L=70.32
Δ=14°05'38"
L=209.09
S31°16'06"W 145.67
S27°40'03"W 144.22
S24°24'01"W 138.61
S20°57'38"W 140.00
S17°37'56"W 137.44
S14°05'53"W 136.80
S09°25'31"W
132.50
86.17
S01°25'56"E 53.39
Δ=7°30'26"
L=155.00
Δ=3°31'42"
L=72.85
Δ=3°26'03"
L=70.90
Δ=3°26'03"
L=70.90
Δ=3°26'03"
L=70.90
Δ=3°26'03"
L=70.90
Δ=3°26'03"
L=70.90
Δ=35°13'13"
L=737.67
L=880.67
R=1200.00
Δ=42°02'56"
CB=S67°25'29"E
S46°24'01"E 313.40
S37°01'19"W 49.09
FOUNDERS PATH
OUTLOT A
PERCHERON BOULEVARD
S00°10'04"W 201.50
30
123.22
S39°53'52"W 138.01
90.44
Δ=17°24'17"
L=261.32
Δ=27°14'09"
L=401.05
L=473.14
R=850.00
Δ=41°19'46"
L=95.53
Δ=6°40'31"
L=95.49
Δ=6°40'19"
L=76.41
Δ=5°20'21"
L=76.41
Δ=5°20'21"
L=38.10
Δ=2°39'44"
L=76.41
Δ=5°20'21"
L=33.75
Δ=2°21'29"
N70°07'05"W 140.00
N72°28'34"W 140.00
N79°08'53"W 140.00
N84°29'13"W 153.89
79.18
S23°13'11"W
79.14
S14°17'23"W
64.21
S04°18'08"E 3.06
83.00
70.90
N89°02'08"W 201.53
53.21
Δ=6°53'49"
L=149.98
L=1345.20
R=1946.00
Δ=3°57'14"
N50°06'08"W 135.00
N52°45'53"W 140.26
N58°06'13"W 140.00
N83°26'34"W 140.00
63.34
S29°13'35"W
67.69
N24°49'07"E 131.26
65.33
1
2
3
4
Drainage & Utility Easement
OUTLOT B
N43°12'20"W 220.50
205.59
N29°04'07"W 286.40
N25°45'30"E 363.06
309.35
101
PERCHERON BOULEVARD
199074.52 SQ. FT.
4.57 ACRES
4
8
9
84.30
70.59
99.40
Δ=6°56'43"
141.50
95.95
L=36.58
Δ=2°22'54"
S01°25'56"E 43.34
30.04
30.00
FOUNDERS PATH
N89°49'56"W 155.22
L=28.58
R=1213.00
Δ=1°21'00"
182.94
N89°49'56"W

INSET A

(FROM SHEET 3 OF 5 SHEETS)

N

SCALE IN FEET

0 60 120 180

SCALE: 1 INCH = 60 FEET

- SET 1/2" BY 14" IRON PIPE WITH CAP #53596
- FOUND MONUMENT AS NOTED ON SURVEY
- FOUND CARVER COUNTY CAST IRON MONUMENT

THE SOUTH LINE OF THE NORTHEAST QUARTER OF SECTION 7, TOWNSHIP 115, RANGE 23, HAS A BEARING OF N 89°48'03" W (CARVER COUNTY, NAD83 (1986ADJ))

DETAIL C

(NOT TO SCALE)

FOUNDERS PATH
PERCHERON BOULEVARD
S01°25'56" 72.41
Δ=35°13'13"
---737.67
Δ=00°00'49"
L=0.28
---L=880.67
R=1200.00
Δ=42°02'56"
CB=S67°25'29"E
FOUNDERS PATH
S01°25'56"E 43.03
53.00
30.03
Δ=01°21'00"
L=28.58---

DETAIL C

43.34
S01°25'56"E
182.94
N89°49'56"W

Westwood
Professional Services, Inc.

RIVERTOWN HEIGHTS

PLAT FILE NO.
C.R. DOC. NO.

DETAIL B

(FROM SHEET 3 OF 5 SHEETS)

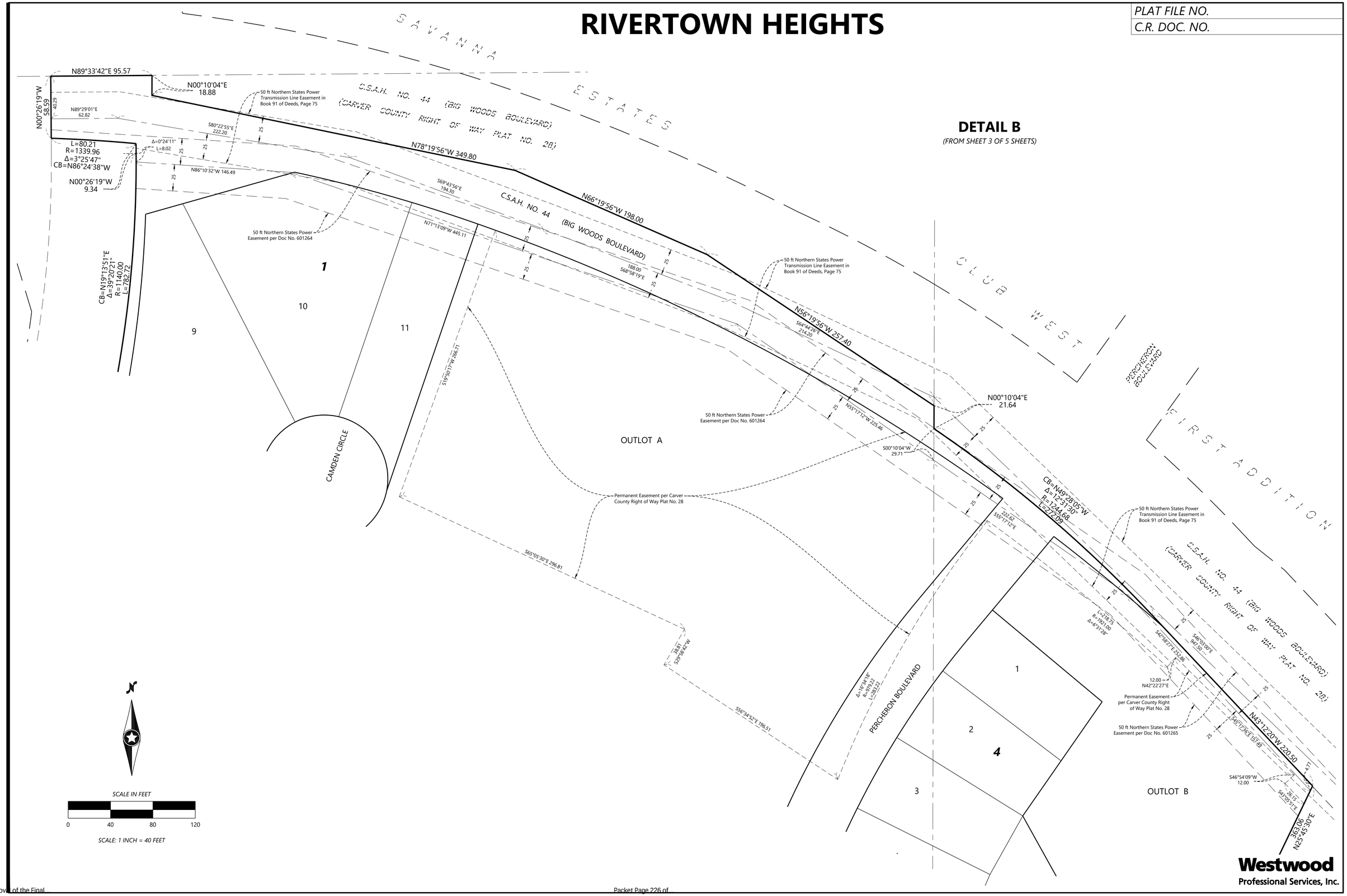

SCALE IN FEET

0 40 80 120

SCALE: 1 INCH = 40 FEET

Westwood
Professional Services, Inc.

© 2021 Westwood Professional Services, Inc.

CONSTRUCTION PLANS

FOR

GRADING, DRAINAGE, EROSION CONTROL, AND TREE PRESERVATION PLANS

FOR

RIVERTOWN HEIGHTS

CHASKA, MN



Vicinity Map
(NOT TO SCALE)

PREPARED FOR:

DR HORTON, INC. - MINNESOTA

20860 KENBRIDGE COURT, SUITE 100
LAKEVILLE, MINNESOTA 55044
CONTACT: MIKE SUEL
PHONE: 952-985-7823
EMAIL: MSUEL@DRHORTON.COM

PREPARED BY:

Westwood

Phone	(952) 937-5150	12701 Whitewater Drive, Suite #300
Fax	(952) 937-5822	Minnetonka, MN 55343
Toll Free	(888) 937-5150	westwoodps.com

Westwood Professional Services, Inc.

PROJECT NUMBER: 0027067.00
CONTACT: JOHN H. BENDER

SHEET INDEX

Sheet List Table

SHEET NUMBER	SHEET TITLE
1	Cover
2	Grading, Drainage, and Erosion Control Plans - Overall
3	Grading, Drainage, and Erosion Control Plans
4	Grading, Drainage, and Erosion Control Plans
5	Grading, Drainage, and Erosion Control Plans
6	Grading, Drainage, and Erosion Control Plans
7	Street Profiles
8	Street Profiles
9	Details
10	Details
11	Tree Preservation Plan - Overall
12	Tree Preservation Plan
13	Tree Preservation Plan
14	Tree Preservation Plan
15	Tree Preservation Plan
16	Tree Preservation Data
17	Seeding Plan
18	Topsoil Management Plan

NO.	DATE	REVISION	SHEETS
1	05/25/22	REVISED FOR CITY COMMENTS	All
	.	.	
	.	.	
	.	.	
	.	.	
	.	.	
	.	.	
	.	.	
	.	.	
	.	.	

CONSTRUCTION PLANS
FOR
GRADING, DRAINAGE, EROSION CONTROL, AND TREE PRESERVATION PLANS
FOR
RIVERTOWN HEIGHTS
CHASKA, MN

INITIAL SUBMITTAL DATE: 04/29/22 SHEET: 1 OF 18

© 2021 Westwood Professional Services, Inc.

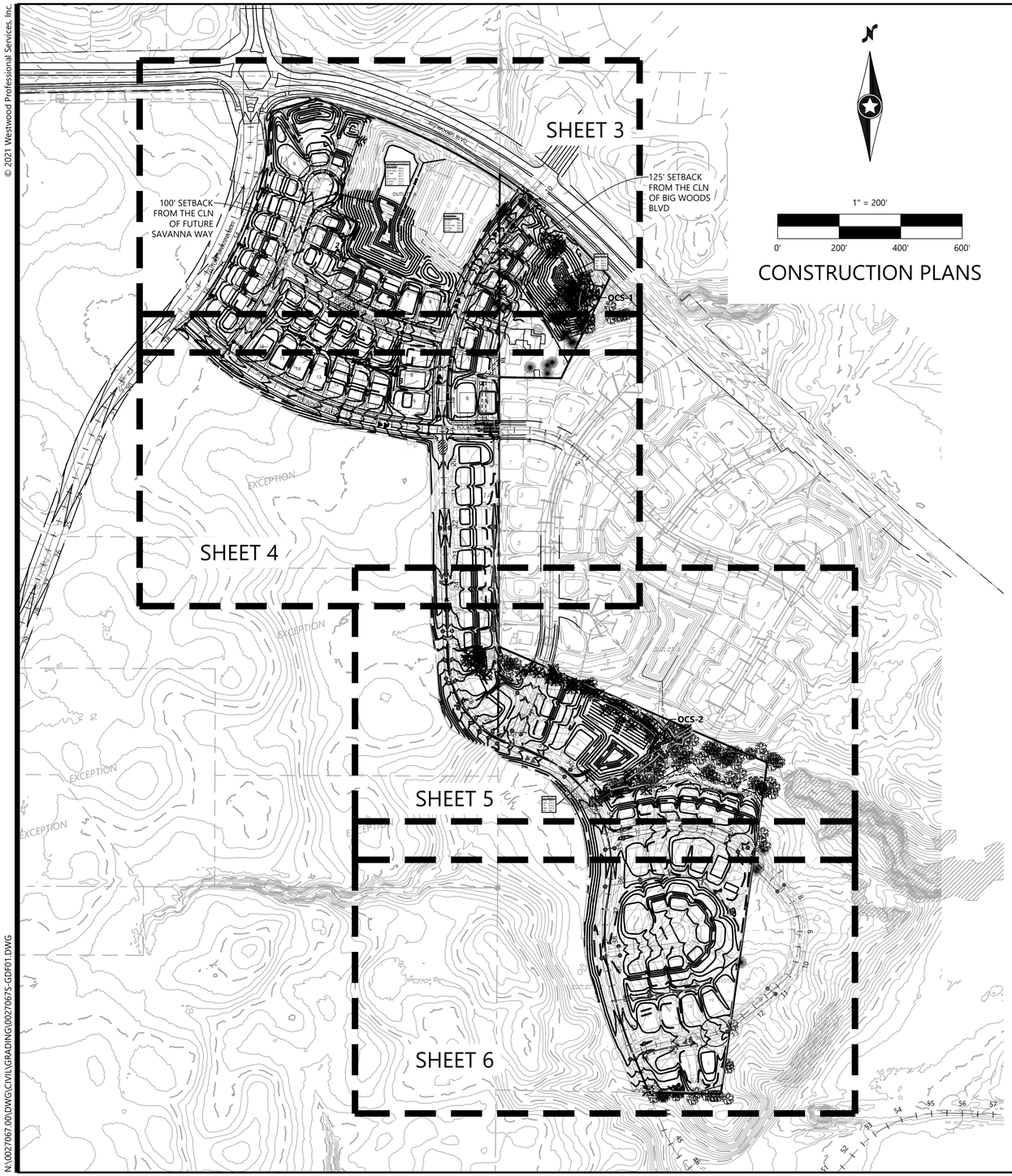

CONSTRUCTION PLANS

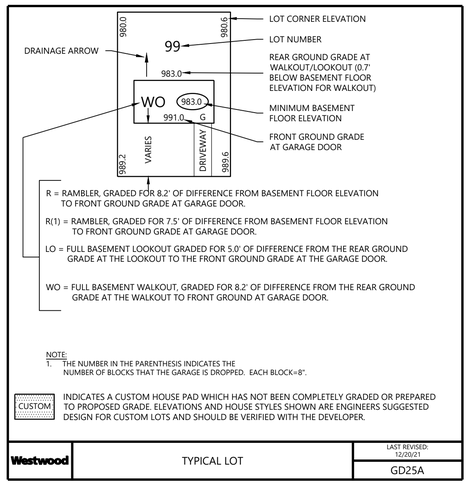

GRADING & EROSION CONTROL LEGEND

Call 48 Hours before digging:
811 or call811.com
Common Ground Alliance

EXISTING	PROPOSED	
		PROPERTY LINE
SB-19	SB-19	SOIL BORING LOCATION
980	980	INDEX CONTOUR
982	982	INTERVAL CONTOUR
× 900.00	× 900.00	SPOT ELEVATION
	× HP/LP 900.00	HIGH/LOW POINT
	× CL-CL 900.00	CL-CL ELEVATION
	0.00%	FLOW DIRECTION
	TW=XXX.XX BW=XXX.XX	TOP AND BOTTOM OF RETAINING WALL
	E.O.F.	EMERGENCY OVERFLOW
	X.XX%	PROPOSED STREET PROFILE GRADE
STO		STORM SEWER
		TREE LINE
	TPF	TREE PROTECTION FENCE
		RETAINING WALL (MODULAR BLOCK)
	GL	GRADING LIMITS
	SF	SILT FENCE
	POST-SF	SILT FENCE-POST GRADING
	HDSF	HEAVY DUTY SILT FENCE
	RSC	REDUNDANT SEDIMENT CONTROL
		INLET PROTECTION
		EROSION CONTROL CHECKS/BIOROLLS
		ROCK CONSTRUCTION ENTRANCE
		EROSION CONTROL BLANKET
		TURF REINFORCEMENT MAT
		POND NORMAL WATER LEVEL
		WETLAND LINE
		WETLAND FILL
		WETLAND BUFFER
		POND ACCESS MAINTENANCE BENCH
		WETLAND BUFFER LIMITS
		WETLAND BUFFER MONUMENT
	DND	DO NOT DISTURB

EROSION CONTROL NOTES

1. ALL SILT FENCE AND OTHER EROSION CONTROL FEATURES SHALL BE IN-PLACE PRIOR TO ANY EXCAVATION/CONSTRUCTION AND SHALL BE MAINTAINED UNTIL VIABLE TURF OR GROUND COVER HAS BEEN ESTABLISHED. EXISTING SILT FENCE ON-SITE SHALL BE MAINTAINED AND OR REMOVED AND SHALL BE CONSIDERED INCIDENTAL TO THE GRADING CONTRACT. IT IS OF EXTREME IMPORTANCE TO BE AWARE OF CURRENT FIELD CONDITIONS WITH RESPECT TO EROSION CONTROL. TEMPORARY PONDING, DIKES, HAY BALES, ETC., REQUIRED BY THE CITY SHALL BE INCIDENTAL TO THE GRADING CONTRACT.
2. ALL STREETS DISTURBED DURING WORKING HOURS MUST BE CLEANED AT THE END OF EACH WORKING DAY. A ROCK ENTRANCE TO THE SITE MUST BE PROVIDED ACCORDING TO DETAILS TO REDUCE TRACKING OF DIRT ONTO PUBLIC STREETS.
3. REDUNDANT PERIMETER SEDIMENT CONTROLS ARE NECESSARY WHEN SOIL DISTURBANCE IS WITHIN 50 FEET OF SURFACE WATERS. REDUNDANT SEDIMENT CONTROLS COULD INCLUDE:
   - 3.1. TWO ROWS OF SILT FENCE (SEPARATED BY 8 FEET); OR
   - 3.2. SILT FENCE AND A TOPSOIL BERM (STABILIZE BERM WITH MULCH); OR
   - 3.3. SILT FENCE AND FIBER LOGS; OR
   - 3.4. TOPSOIL BERM AND FIBER LOGS (STABILIZE BERM WITH MULCH).
4. REDUNDANT SEDIMENT CONTROLS MUST BE INSTALLED PRIOR TO DISTURBING WITHIN 50 FEET OF THE SURFACE WATER.

GRADING & DRAINAGE NOTES

1. ALL CONTOURS AND SPOT ELEVATIONS ARE SHOWN TO FINISHED SURFACE/GUTTER GRADES UNLESS OTHERWISE NOTED.
2. REFER TO THE SITE PLAN/RECORD PLAT FOR MOST CURRENT HORIZONTAL SITE DIMENSIONS AND LAYOUT.
3. THE CONTRACTOR SHALL VERIFY THE LOCATION AND ELEVATION OF EXISTING UTILITIES AND TOPOGRAPHICAL FEATURES WITH THE OWNERS AND FIELD-VERIFY PRIOR TO CONSTRUCTION. THE CONTRACTOR SHALL IMMEDIATELY NOTIFY THE ENGINEER OF ANY DISCREPANCIES OR VARIATIONS FROM PLAN.
4. ALL CONSTRUCTION SHALL CONFORM TO LOCAL RULES.
5. THE CONTRACTOR IS TO CONTACT GOPHER STATE "ONE CALL" FOR UTILITY LOCATIONS AT 651-454-0002.
6. THE GRADING CONTRACTOR MUST BE AWARE OF ALL EXISTING AND PROPOSED UTILITIES.
7. HAULING HOURS MUST BE CONFIRMED WITH THE CITY PRIOR TO BEGINNING WORK/
8. POSITIVE DRAINAGE FROM THE SITE MUST BE PROVIDED AT ALL TIMES.
9. BASIN MAINTENANCE ACCESS PATH SHALL BE CONSTRUCTED WITH SUITABLE SOIL AND BE CAPABLE OF SUPPORTING VEHICLE TRAFFIC.

N:\0027067.00\DWG\CIVIL\GRADING\0027067S-GDF01.DWG

RIVERTOWN HEIGHTS

DESIGNED: FDH II
CHECKED: JHB
DRAWN: CTY
HORIZONTAL SCALE: 200'
VERTICAL SCALE: 40' OR 20'

INITIAL ISSUE: 04/29/22
REVISIONS:
1 05/25/22 REVISED FOR CITY COMMENTS
2 . .
3 . .
4 . .
5 . .

PREPARED FOR:
DR HORTON, INC. - MINNESOTA
20860 KENBRIDGE COURT, SUITE 100
LAKEVILLE, MINNESOTA 55044

I HEREBY CERTIFY THAT THIS PLAN WAS PREPARED BY ME OR UNDER MY DIRECT SUPERVISION AND THAT I AM A DULY LICENSED PROFESSIONAL ENGINEER UNDER THE LAWS OF THE STATE OF MINNESOTA
JOHN H. BENDER
DATE: 05/25/22 LICENSE NO. 43358

RIVERTOWN HEIGHTS
CHASKA, MN

Westwood
Phone (952) 937-5150 12701 Whitewater Drive, Suite #300
Fax (952) 937-5822 Minnetonka, MN 55343
Toll Free (888) 937-5150 westwoodps.com
Westwood Professional Services, Inc.

GRADING, DRAINAGE, AND EROSION CONTROL PLANS - OVERALL
PROJECT NUMBER: 0027067.00

SHEET NUMBER: 2 OF 18
DATE: 05/25/22

© 2021 Westwood Professional Services, Inc.

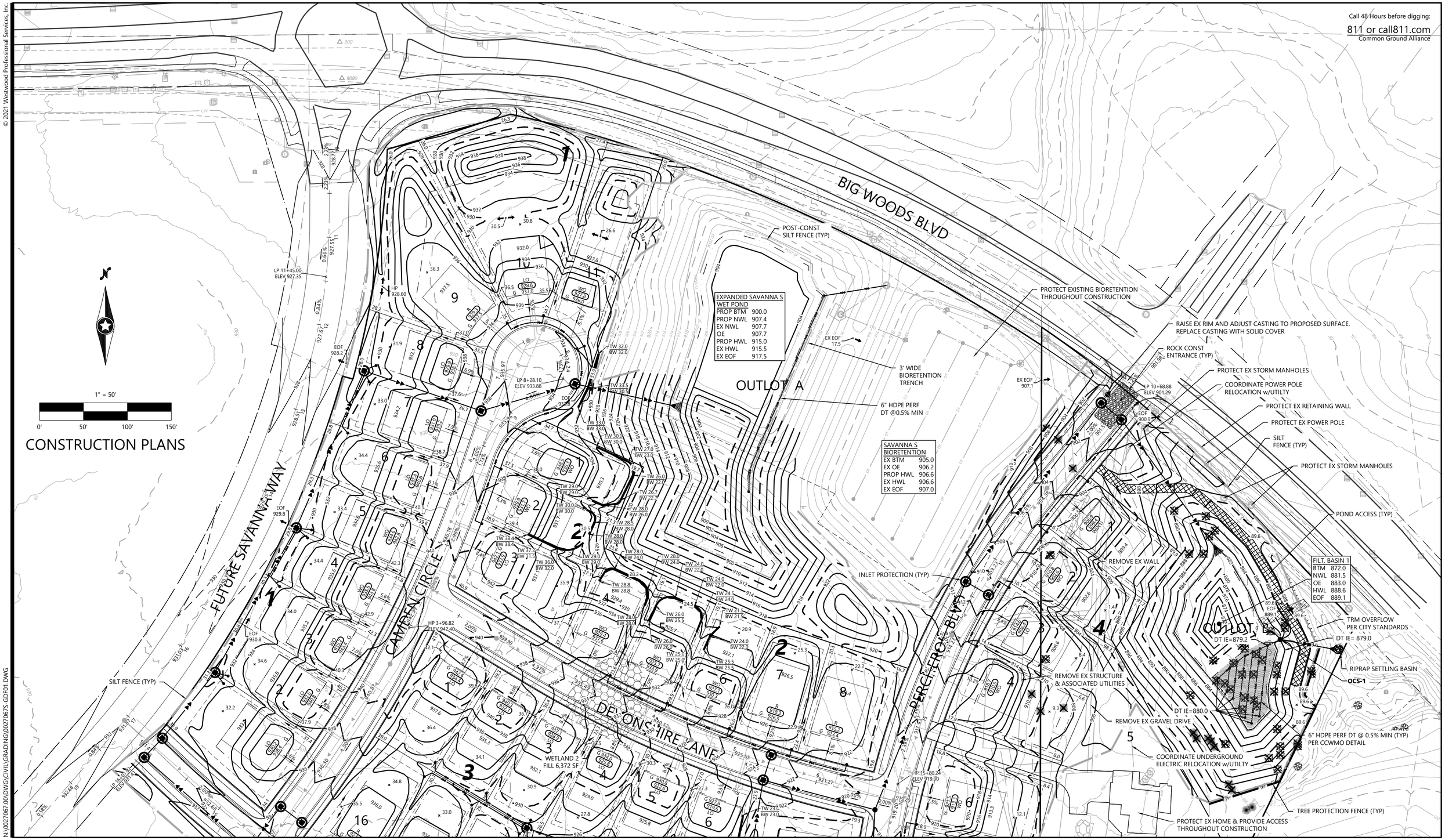

RIVERTOWN HEIGHTS

N:\0027067.00\DWG\CIVIL\GRADING\0027067S-GDF01.DWG

DESIGNED:	FDH II
CHECKED:	JHB
DRAWN:	CTY
HORIZONTAL SCALE:	50'
VERTICAL SCALE:	10' OR 5'

INITIAL ISSUE: 04/29/22
REVISIONS:

△	05/25/22	REVISED FOR CITY COMMENTS
△	.	.
△	.	.
△	.	.
△	.	.

PREPARED FOR:

DR HORTON, INC. - MINNESOTA

20860 KENBRIDGE COURT, SUITE 100
LAKEVILLE, MINNESOTA 55044

I HEREBY CERTIFY THAT THIS PLAN WAS PREPARED BY ME OR UNDER MY DIRECT SUPERVISION AND THAT I AM A DULY LICENSED PROFESSIONAL ENGINEER UNDER THE LAWS OF THE STATE OF MINNESOTA

JOHN H. BENDER

DATE: 05/25/22 LICENSE NO. 43358

RIVERTOWN HEIGHTS

CHASKA, MN

Westwood

Phone (952) 937-5150 12701 Whitewater Drive, Suite #300
Fax (952) 937-5822 Minnetonka, MN 55343
Toll Free (888) 937-5150 westwoodps.com

Westwood Professional Services, Inc.

GRADING, DRAINAGE, AND EROSION CONTROL PLANS

PROJECT NUMBER: 0027067.00

SHEET NUMBER: 3 OF 18

DATE: 05/25/22

© 2021 Westwood Professional Services, Inc.

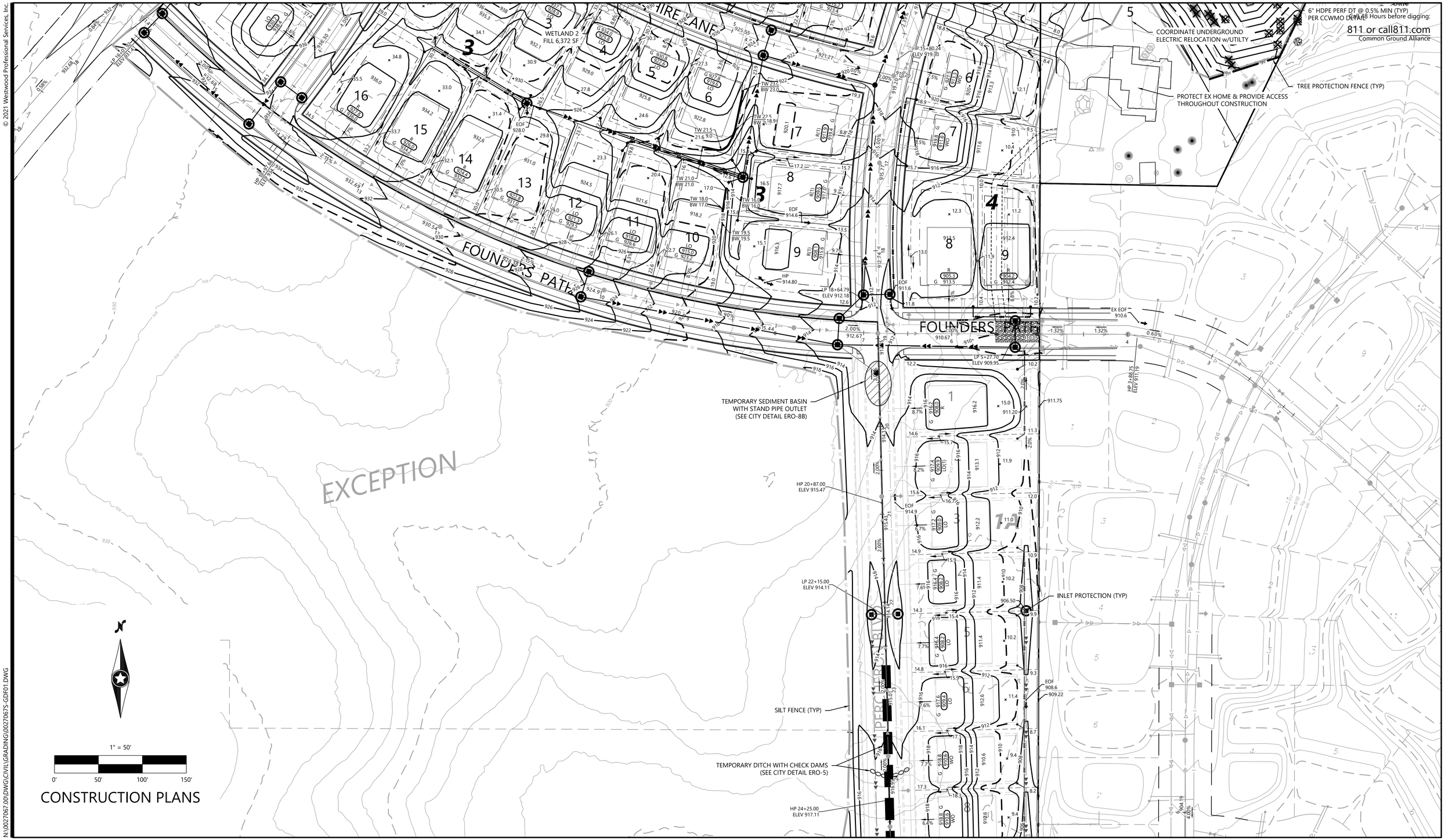

N:\0027067.00\DWG\CIVIL\GRADING\0027067S-GDF01.DWG

DESIGNED:	FDH II
CHECKED:	JHB
DRAWN:	CTY
HORIZONTAL SCALE:	50'
VERTICAL SCALE:	10' OR 5'

INITIAL ISSUE: 04/29/22
REVISIONS:

△	05/25/22	REVISED FOR CITY COMMENTS
△	.	.
△	.	.
△	.	.
△	.	.

PREPARED FOR:

DR HORTON, INC. - MINNESOTA

20860 KENBRIDGE COURT, SUITE 100
LAKEVILLE, MINNESOTA 55044

I HEREBY CERTIFY THAT THIS PLAN WAS PREPARED BY ME OR UNDER MY DIRECT SUPERVISION AND THAT I AM A DULY LICENSED PROFESSIONAL ENGINEER UNDER THE LAWS OF THE STATE OF MINNESOTA

JOHN H. BENDER

DATE: 05/25/22 LICENSE NO. 43358

RIVERTOWN HEIGHTS

CHASKA, MN

Westwood

Phone (952) 937-5150 12701 Whitewater Drive, Suite #300
Fax (952) 937-5822 Minnetonka, MN 55343
Toll Free (888) 937-5150 westwoodps.com

Westwood Professional Services, Inc.

GRADING, DRAINAGE, AND EROSION CONTROL PLANS

PROJECT NUMBER: 0027067.00

SHEET NUMBER: 4 OF 18

DATE: 05/25/22

© 2021 Westwood Professional Services, Inc.

Call 48 Hours before digging:
811 or call811.com
Common Ground Alliance

TEMPORARY DITCH WITH CHECK DAMS (SEE CITY DETAIL ERO-5)

HP 24+25.00
ELEV 917.11

EOF
903.5
904.48

TEMPORARY DITCH WITH CHECK DAMS (SEE CITY DETAIL ERO-5)

6" HDPE PERF DT @ 0.5% MIN (TYP)
PER CCWMO DETAIL

DT IE=872.7

DT IE=871.3

OCS-2

BUILD STMH OVER EX STORM
COMBINE POND OUTLETS

RIPRAP SETTLING BASIN

DT IE=871.6

TRM OVERFLOW PER CITY STANDARDS

EOF
880.1

LIMITS OF STEEP WOODED SLOPE (DELINEATED BY OTHERS)

LIMITS OF 18% WOODED SLOPE (TYP.)

30' GRADING SETBACK (TYP.)

50' BUILDING SETBACK (TYP.)

POND ACCESS
(TYP)

LP 32+13.79
ELEV 882.70

EOF
882.9

FILT. BASIN 2	
BTM	866.0
NWL	874.2
OE	876.0
HWL	879.6
EOF	880.1

6' WIDE EPHEMERAL
STREAM IMPACT
135 LF
796 SF

WETLAND 1
ONSITE FILL 3,913 SF.
OFFSITE IMPACT AWAITING
DELINEATION BY CITY
IN SPRING 2022.

SILT FENCE (TYP)

HP 4+28.49
ELEV 883.97

LP 1+55.10
ELEV 886.33

N

1" = 50'

0' 50' 100' 150'

CONSTRUCTION PLANS

N:\0027067.00\DWG\CIVIL\GRADING\0027067S-GDP01.DWG

RIVERTOWN HEIGHTS

DESIGNED:	FDH II
CHECKED:	JHB
DRAWN:	CTY
HORIZONTAL SCALE:	50'
VERTICAL SCALE:	10' OR 5'

INITIAL ISSUE: 04/29/22
REVISIONS:

1	05/25/22	REVISED FOR CITY COMMENTS
2	.	.
3	.	.
4	.	.
5	.	.

PREPARED FOR:

DR HORTON, INC. - MINNESOTA

20860 KENBRIDGE COURT, SUITE 100
LAKEVILLE, MINNESOTA 55044

I HEREBY CERTIFY THAT THIS PLAN WAS PREPARED BY ME OR UNDER MY DIRECT SUPERVISION AND THAT I AM A DULY LICENSED PROFESSIONAL ENGINEER UNDER THE LAWS OF THE STATE OF MINNESOTA

JOHN H. BENDER

DATE: 05/25/22 LICENSE NO. 43358

RIVERTOWN HEIGHTS

CHASKA, MN

Westwood

Phone (952) 937-5150 12701 Whitewater Drive, Suite #300
Fax (952) 937-5822 Minnetonka, MN 55343
Toll Free (888) 937-5150 westwoodps.com

Westwood Professional Services, Inc.

GRADING, DRAINAGE, AND EROSION CONTROL PLANS

PROJECT NUMBER: 0027067.00

SHEET NUMBER: 5 OF 18

DATE: 05/25/22

© 2021 Westwood Professional Services, Inc.

6' WIDE EPHEMERAL STREAM IMPACT
135 LF
796 SF

WETLAND 1
ONSITE FILL 3,913 SF.
OFFSITE IMPACT AWAITING DELINEATION BY CITY IN SPRING 2022.

SILT FENCE (TYP)

INLET PROTECTION (TYP)

Call 48 Hours before digging:
811 or call811.com
Common Ground Alliance

FUTURE DEVELOPMENT BY OTHERS

ASSUMED PAD & LOT GRADING (BY OTHERS)

ASSUMED STREET GRADE (BY OTHERS)

1" = 50'

0' 50' 100' 150'

CONSTRUCTION PLANS

N:\0027067.00\DWG\CIVIL\GRADING\0027067S-GDF01.DWG

RIVERTOWN HEIGHTS

DESIGNED:	FDH II
CHECKED:	JHB
DRAWN:	CTY
HORIZONTAL SCALE:	50'
VERTICAL SCALE:	10' OR 5'

INITIAL ISSUE: 04/29/22
REVISIONS:
1 05/25/22 REVISED FOR CITY COMMENTS
2 . .
3 . .
4 . .
5 . .

PREPARED FOR:

DR HORTON, INC. - MINNESOTA

20860 KENBRIDGE COURT, SUITE 100
LAKEVILLE, MINNESOTA 55044

I HEREBY CERTIFY THAT THIS PLAN WAS PREPARED BY ME OR UNDER MY DIRECT SUPERVISION AND THAT I AM A DULY LICENSED PROFESSIONAL ENGINEER UNDER THE LAWS OF THE STATE OF MINNESOTA

JOHN H. BENDER
DATE: 05/25/22 LICENSE NO. 43358

RIVERTOWN HEIGHTS

CHASKA, MN

Westwood

Phone (952) 937-5150 12701 Whitewater Drive, Suite #300
Fax (952) 937-5822 Minnetonka, MN 55343
Toll Free (888) 937-5150 westwoodps.com

Westwood Professional Services, Inc.

GRADING, DRAINAGE, AND EROSION CONTROL PLANS

PROJECT NUMBER: 0027067.00

SHEET NUMBER: 6 OF 18

DATE: 05/25/22

© 2021 Westwood Professional Services, Inc.

Call 48 Hours before digging:
811 or call811.com
Common Ground Alliance

Street 1 - Percheron Blvd

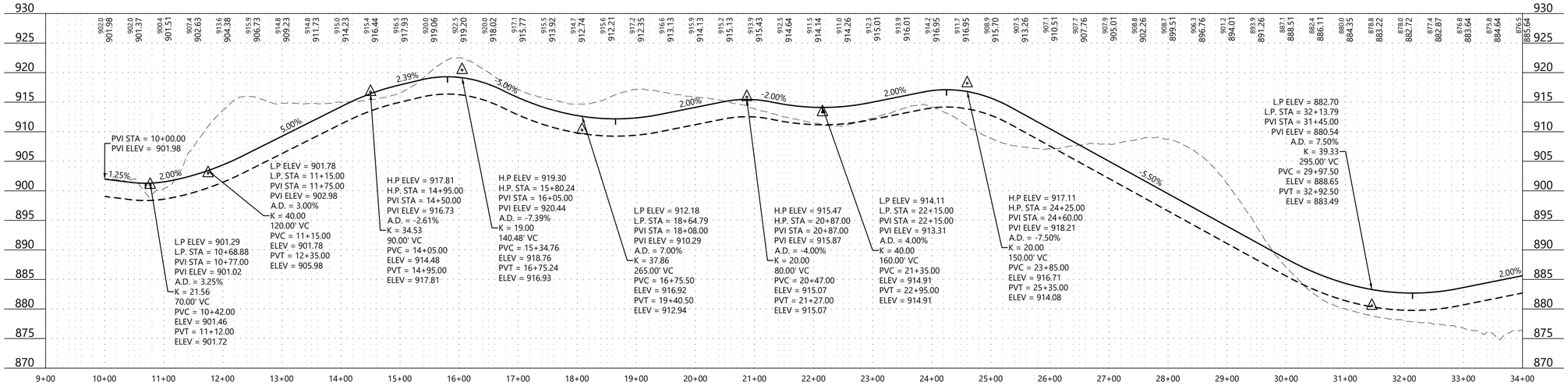

Street 1 - Percheron Blvd

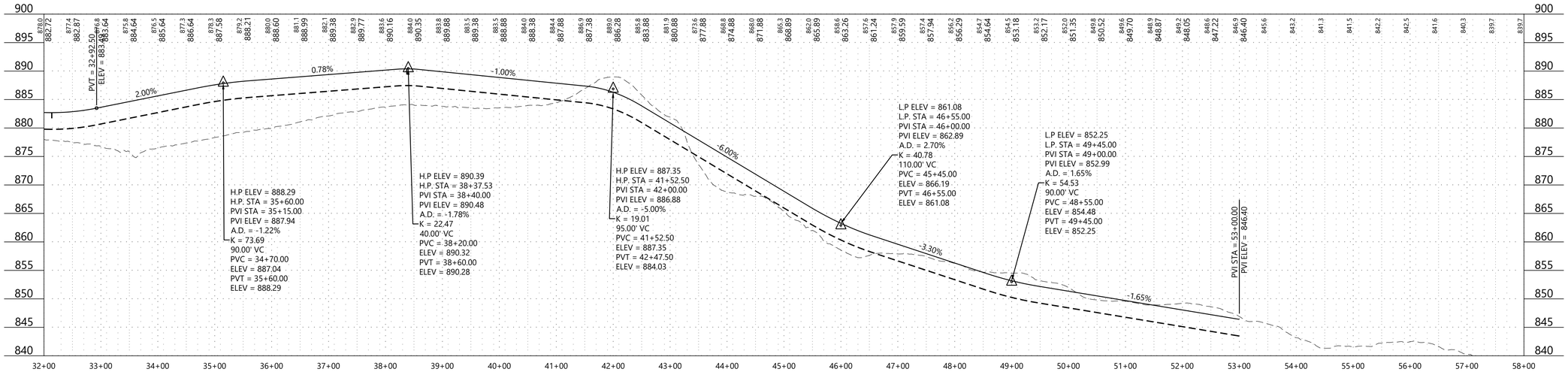

1" = 100'

0' 100' 200' 300'

CONSTRUCTION PLANS

N:\0027067.00\DWG\CIVIL\GRADING\0027067S-DTF01.DWG

RIVERTOWN HEIGHTS

DESIGNED:	FDH II
CHECKED:	JHB
DRAWN:	CTY
HORIZONTAL SCALE:	100'
VERTICAL SCALE:	20' OR 10'

INITIAL ISSUE: 04/29/22
REVISIONS:
1 05/25/22 REVISED FOR CITY COMMENTS
2 . .
3 . .
4 . .
5 . .

PREPARED FOR:

DR HORTON, INC. - MINNESOTA

20860 KENBRIDGE COURT, SUITE 100
LAKEVILLE, MINNESOTA 55044

I HEREBY CERTIFY THAT THIS PLAN WAS PREPARED BY ME OR UNDER MY DIRECT SUPERVISION AND THAT I AM A DULY LICENSED PROFESSIONAL ENGINEER UNDER THE LAWS OF THE STATE OF MINNESOTA

JOHN H. BENDER
DATE: 05/25/22 LICENSE NO. 43358

RIVERTOWN HEIGHTS

CHASKA, MN

Westwood

Phone (952) 937-5150 12701 Whitewater Drive, Suite #300
Fax (952) 937-5822 Minnetonka, MN 55343
Toll Free (888) 937-5150 westwoodps.com

Westwood Professional Services, Inc.

STREET PROFILES

SHEET NUMBER: 7 OF 18

PROJECT NUMBER: 0027067.00

DATE: 05/25/22

© 2021 Westwood Professional Services, Inc.

Call 48 Hours before digging:
811 or call811.com
Common Ground Alliance

Street 2 - Founders Path

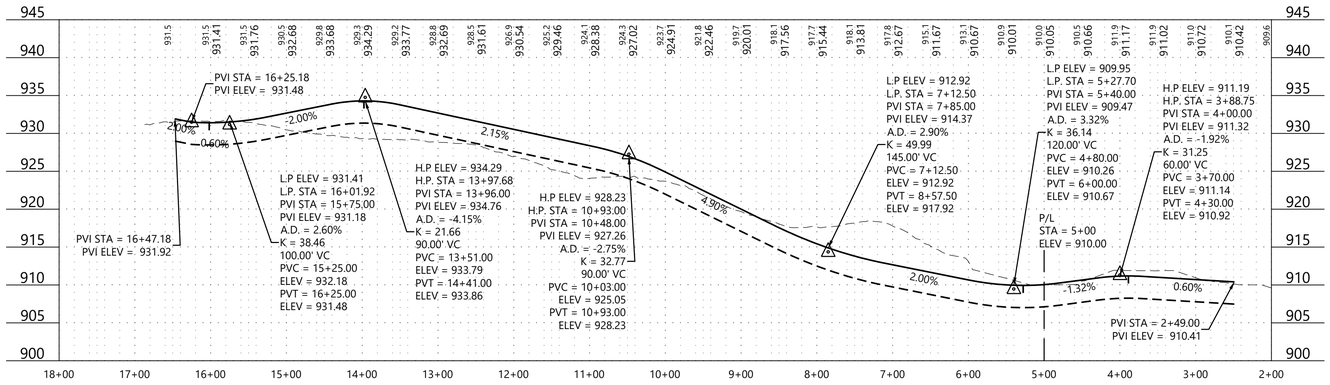

1" = 100'

0' 100' 200' 300'

CONSTRUCTION PLANS

Street 4 - Camden Circle

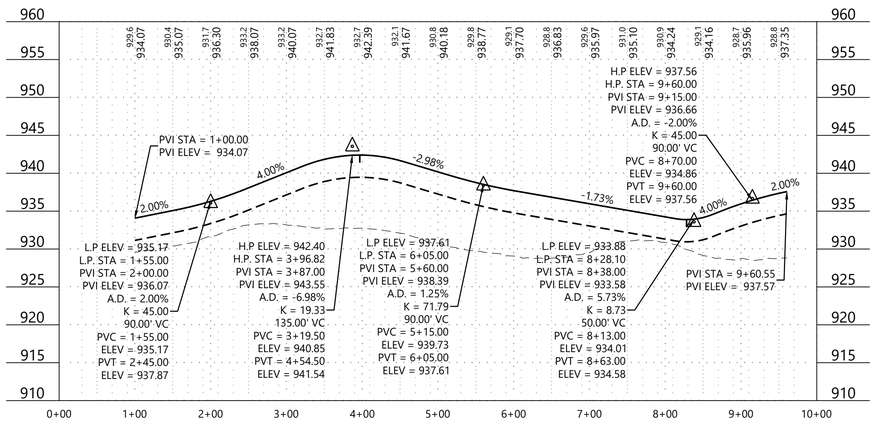

Street 5 - Devonshire Lane

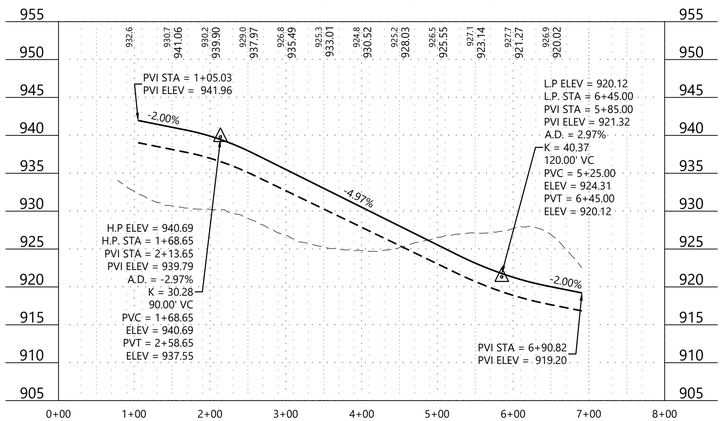

Street 6 - Carver Path

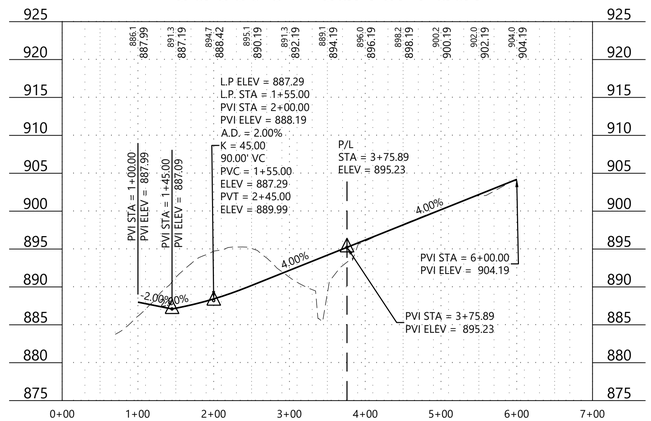

Street 7 - Brookside Drive

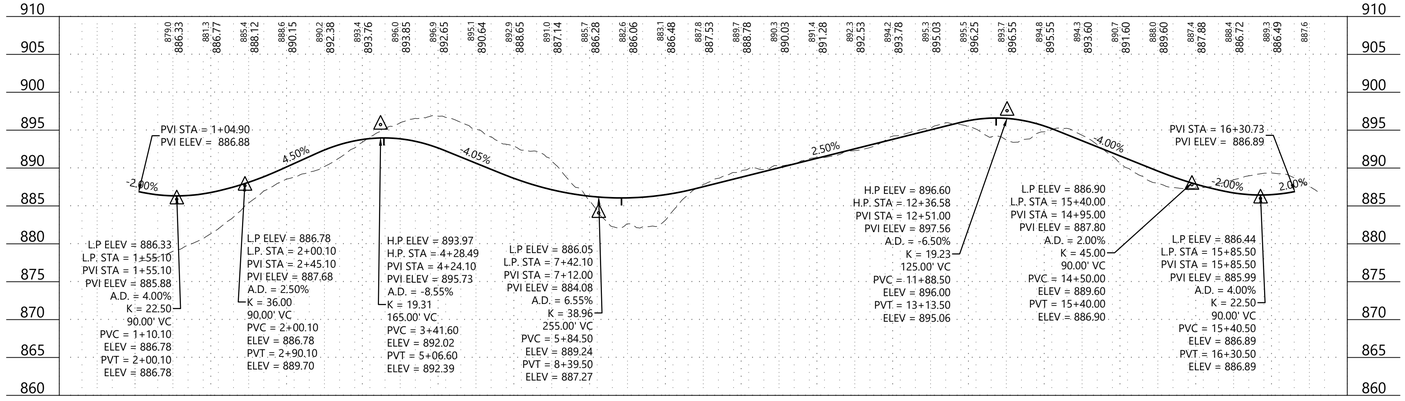

Street 8 - Laurel Court

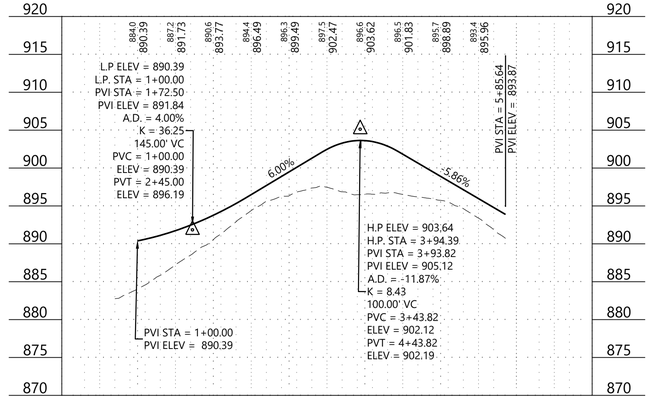

N:\0027067.00\DWG\CIVIL\GRADING\0027067S-DTF01.DWG

RIVERTOWN HEIGHTS

DESIGNED: FDH II
CHECKED: JHB
DRAWN: CTY
HORIZONTAL SCALE: 100'
VERTICAL SCALE: 20' OR 10'

INITIAL ISSUE: 04/29/22
REVISIONS:
1 05/25/22 REVISED FOR CITY COMMENTS
2 . .
3 . .
4 . .
5 . .

PREPARED FOR:

DR HORTON, INC. - MINNESOTA

20860 KENBRIDGE COURT, SUITE 100
LAKEVILLE, MINNESOTA 55044

I HEREBY CERTIFY THAT THIS PLAN WAS PREPARED BY ME OR UNDER MY DIRECT SUPERVISION AND THAT I AM A DULY LICENSED PROFESSIONAL ENGINEER UNDER THE LAWS OF THE STATE OF MINNESOTA

DATE: 05/25/22 LICENSE NO. 43358

RIVERTOWN HEIGHTS

CHASKA, MN

Westwood

Phone (952) 937-5150
Fax (952) 937-5822
Toll Free (888) 937-5150
12701 Whitewater Drive, Suite #300
Minnetonka, MN 55343
westwoodps.com

Westwood Professional Services, Inc.

STREET PROFILES

PROJECT NUMBER: 0027067.00

SHEET NUMBER: 8 OF 18

DATE: 05/25/22

© 2021 Westwood Professional Services, Inc.

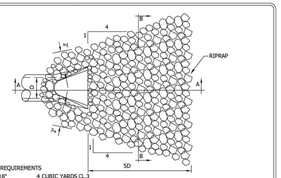

RIPRAP AT OUTLETS
CHASKA, MINNESOTA
LAST REVISION: APRIL 2004
PLATE NO. STO-11

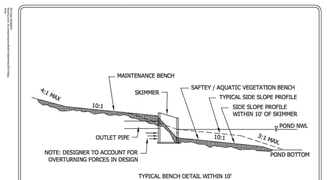

TYPICAL BENCH DETAIL
CHASKA, MINNESOTA
LAST REVISION: MARCH 2001
PLATE NO. STO-19

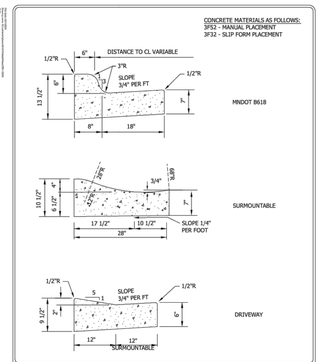

CURB AND GUTTER
CHASKA, MINNESOTA
LAST REVISION: APRIL 2016
PLATE NO. STR-1

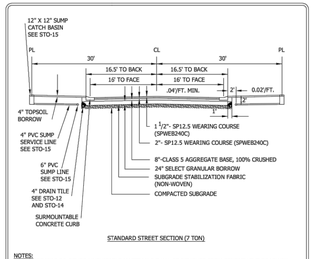

NOTES:
1. ALL ORGANIC OR OTHER UNSUITABLE MATERIALS SHALL BE REMOVED FROM BENEATH THE ROADWAY.
2. A TEST ROLL OF THE PREPARED SUBGRADE SHALL BE PERFORMED BY THE OWNER IN THE PRESENCE OF A CITY INSPECTOR. THE CITY HAS THE AUTHORITY TO REQUIRE ADDITIONAL SUBGRADE CORRECTION OR ELIMINATE THE STABILIZATION FABRIC.
3. THE CITY RESERVES THE RIGHT TO MODIFY STREET SECTION AS REQUIRED.
4. NO CONCRETE WORK OR BITUMINOUS PAVING SHALL OCCURE AFTER OCTOBER 31ST UNLESS AUTHORIZED BY THE CITY OF CHASKA.
5. STREET WIDTH TO BE DETERMINED BY PROJECTED TRAFFIC VOLUMES.
6. RECYCLE MATERIAL ACCEPTED AS CLASS 5 AGGREGATE BASE SUBSTITUTE IF MEETING GUIDELINES.

TYPICAL SECTIONS FOR RESIDENTIAL STREETS 7 TON SECTION
CHASKA, MINNESOTA
LAST REVISION: JUNE 2012
PLATE NO. STR-7

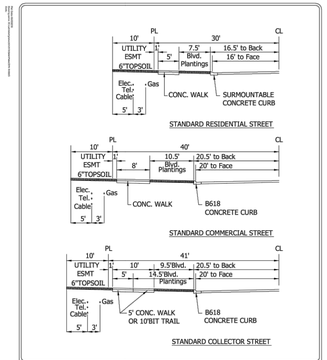

TYPICAL STREET COMPONENTS/DIMENSIONS RESIDENTIAL, COMMERCIAL & COLLECTOR
CHASKA, MINNESOTA
LAST REVISION: APRIL 2016
PLATE NO. STR-16

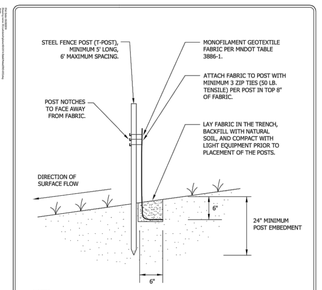

NOTES:
1. SPLICING WILL BE MADE AT OPPOSING SILT FENCE POSTS BY PLACING POSTS AND SILT FENCE NEXT TO EACH OTHER AND ROTATING 360°.
2. SILT FENCE IS MACHINE SLICED TYPE SILT FENCE THAT IS HAND INSTALLED IN AREAS INACCESSIBLE TO EQUIPMENT DUE TO SPACE LIMITATIONS, WET SOILS, STEEP SLOPES, ETC.

SILT FENCE STANDARD
CHASKA, MINNESOTA
LAST REVISION: APRIL 2008
PLATE NO. ERO-1C

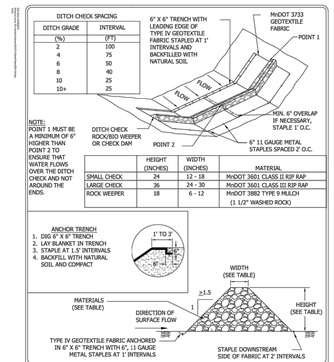

DITCH CHECK / WEEPER SIZING AND MATERIALS
CHASKA, MINNESOTA
LAST REVISION: APRIL 2008
PLATE NO. ERO-5



NOTE:
SPLICING WILL BE MADE AT OPPOSING SILT FENCE POSTS BY PLACING POSTS AND SILT FENCE NEXT TO EACH OTHER AND ROTATING 360°.

SILT FENCE HEAVY DUTY
CHASKA, MINNESOTA
LAST REVISION: APRIL 2008
PLATE NO. ERO-1B

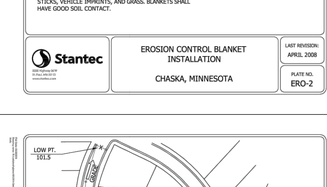

ANCHOR TRENCH:
1. DIG 6" X 6" TRENCH
2. LAY BLANKET IN TRENCH
3. STAPLE AT 1.5' INTERVALS
4. BACKFILL WITH NATURAL SOIL AND COMPACT
5. BLANKET LENGTH SHALL NOT EXCEED 100' WITHOUT AN ANCHOR TRENCH

NOTE:
SLOPE SURFACE SHALL BE FREE OF ROCKS, SOIL CLUMPS, STICKS, VEHICLE IMPRINTS, AND GRASS. BLANKETS SHALL HAVE GOOD SOIL CONTACT.

EROSION CONTROL BLANKET INSTALLATION
CHASKA, MINNESOTA
LAST REVISION: APRIL 2008
PLATE NO. ERO-2

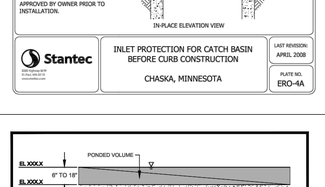

NOTE: ALL OTHER INLET PROTECTION DEVICES MUST BE APPROVED BY OWNER PRIOR TO INSTALLATION.

INLET PROTECTION FOR CATCH BASIN BEFORE CURB CONSTRUCTION
CHASKA, MINNESOTA
LAST REVISION: APRIL 2008
PLATE NO. ERO-4A

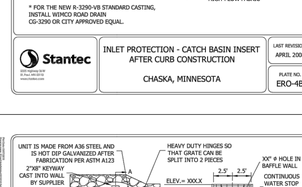

* FOR THE NEW R-3290-VB STANDARD CASTING, INSTALL WIMCO ROAD DRAIN CG-3290 OR CITY APPROVED EQUAL.

INLET PROTECTION - CATCH BASIN INSERT AFTER CURB CONSTRUCTION
CHASKA, MINNESOTA
LAST REVISION: APRIL 2008
PLATE NO. ERO-4B

DEVICES TO BE INSTALLED IMMEDIATELY UPON INSTALLATION OF CONCRETE STRUCTURE CORE OR TOP SLAB.

DEVICES SHOWN ARE AS MANUFACTURED BY WIMCO. MODEL NO. OF UNIT SHOWN: RD 27.

OTHER APPROVED INLET PROTECTION DEVICES FOR BEEHIVE CASTINGS ARE:
- ROYAL ENTERPRISES - MODEL NO 27 INFRASAFE SEDIMENT CONTROL BARRIER - DG
- PRE MANUFACTURED UNIT BY CIRCLE "H" ENTERPRISES.

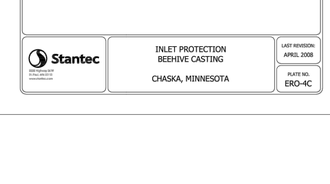

INLET PROTECTION BEEHIVE CASTING
CHASKA, MINNESOTA
LAST REVISION: APRIL 2008
PLATE NO. ERO-4C



NOTES:
1. MnDOT 3733 TYPE 4 FILTER FABRIC SHALL BE PLACED UNDER ROCK OR MULCH TO STOP MUD MIGRATION THROUGH MATERIAL.
2. FUGITIVE ROCK OR MULCH WILL BE REMOVED FROM ADJACENT ROADWAYS DAILY OR MORE FREQUENTLY AS NECESSARY.
3. CONSTRUCTION ENTRANCE MUST BE CONSTRUCTED PRIOR TO THE COMMENCEMENT OF GRADING OPERATIONS ON THE SITE.
4. THE ENTRANCE MUST BE MAINTAINED IN PROPER CONDITION TO PREVENT TRACKING OF MUD OFF THE SITE. THIS MAY REQUIRE PERIODIC TOPDRESSING WITH ADDITIONAL ROCK, WOOD/MULCH, OR REMOVAL AND REINSTALLATION OF THE PAD.
5. THIS ENTRANCE WILL BE USED BY ALL VEHICLES ENTERING OR LEAVING THE PROJECT.
6. THE CONSTRUCTION ENTRANCE WILL BE REMOVED PRIOR TO THE PLACEMENT OF BITUMINOUS SURFACING.

ROCK CONSTRUCTION ENTRANCE
CHASKA, MINNESOTA
LAST REVISION: APRIL 2008
PLATE NO. ERO-7

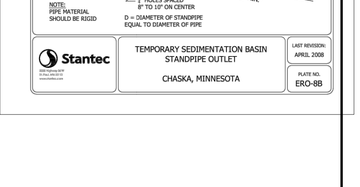

TEMPORARY SEDIMENTATION BASIN STANDPIPE OUTLET
CHASKA, MINNESOTA
LAST REVISION: APRIL 2008
PLATE NO. ERO-8B

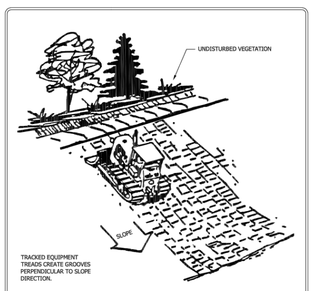

NOTE:
ALL SLOPES WITH A GRADE EQUAL TO OR STEEPER THAN 3:1 REQUIRE SLOPE TRACKING. SLOPES WITH A GRADE MORE GRADUAL THAN 3:1 REQUIRE SLOPE TRACKING IF THE STABILIZATION METHOD IS EROSION CONTROL BLANKET OR HYDROMULCH.

SLOPE TRACKING
CHASKA, MINNESOTA
LAST REVISION: FEB 2004
PLATE NO. ERO-10

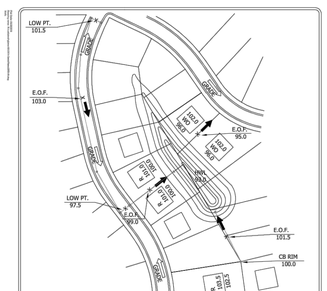

EMERGENCY OVERFLOW DETAIL
CHASKA, MINNESOTA
LAST REVISION: MARCH 2001
PLATE NO. GRD-5

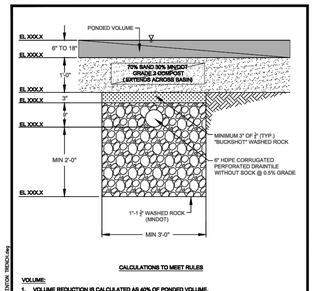

CALCULATIONS TO MEET RULE B

VOLUME:
1. VOLUME REDUCTION IS CALCULATED AS 40% OF PONDED VOLUME.
2. IF NO VEGETATION IS PROVIDED, THE VOLUME CALCULATION IS LOWERED TO 80% OF ROCK VOLUME BELOW TILE.
3. TILE INVERT MUST BE 3 FT ABOVE DOWNSTREAM NWL, GROUNDWATER, BEDROCK, ETC.

WATER QUALITY:
1. FILTRATION IS CALCULATED AS 75% TP REMOVAL AND 90% TSS REMOVAL.

DRAWDOWN:
1. 48 HOUR DRAWDOWN OF BMP(S) IS REQUIRED. TO DETERMINE LENGTH OF TRENCH NEEDED, USE FILTRATION RATE OF 60 CF OF PONDED VOLUME WILL PASS THROUGH ONE LINEAR FOOT OF 3' WIDE TRENCH, OR 17 CF OF PONDED VOLUME PER SF OF SURFACE AREA.

CARVER COUNTY	WENCK Wenck Associates, Inc.	BIORETENTION TRENCH	DEC 2016 DETAIL 1

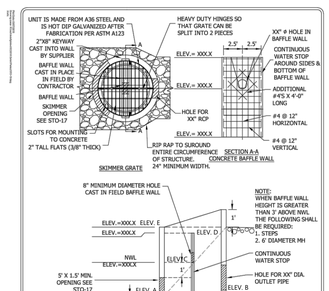

SKIMMER STRUCTURE WITH CAST IN FIELD CONCRETE BAFFLE WALL
CHASKA, MINNESOTA
LAST REVISION: MARCH 2018
PLATE NO. STO-18

STRUCTURE	POND	NWL	HWL	ELEV A (IE IN)	ELEV B (IE OUT)	ELEV C (OE)	ELEV D (TOP WALL)	ELEV E (RE LOW)	ELEV F (SUMP)	ORIFICE SIZE	OUTLET PIPE SIZE
OCS 1	FILT. BASIN 1	881.50	888.60	880.50	878.50	883.00	888.60	888.60	877.50	15"	15" RCP
OCS 2	FILT. BASIN 2	874.20	879.60	873.50	871.30	876.00	877.20	879.80	870.30	8"	30" RCP

Call 48 Hours before digging:
811 or call811.com
Common Ground Alliance

N:\0027067.00\DWG\CIVIL\GRADING\0027067S-DTF02.DWG

RIVERTOWN HEIGHTS

DESIGNED: FDH II
CHECKED: JHB
DRAWN: CTY
HORIZONTAL SCALE: ###
VERTICAL SCALE: ### OR ##

INITIAL ISSUE: 04/29/22
REVISIONS:
1 05/25/22 REVISED FOR CITY COMMENTS
2 . .
3 . .
4 . .
5 . .

PREPARED FOR:
DR HORTON, INC. - MINNESOTA
20860 KENBRIDGE COURT, SUITE 100
LAKEVILLE, MINNESOTA 55044

I HEREBY CERTIFY THAT THIS PLAN WAS PREPARED BY ME OR UNDER MY DIRECT SUPERVISION AND THAT I AM A DULY LICENSED PROFESSIONAL ENGINEER UNDER THE LAWS OF THE STATE OF MINNESOTA
JOHN H. BENDER
DATE: 05/25/22 LICENSE NO. 43358

RIVERTOWN HEIGHTS
CHASKA, MN

Westwood
Phone (952) 937-5150 12701 Whitewater Drive, Suite #300
Fax (952) 937-5822 Minnetonka, MN 55343
Toll Free (888) 937-5150 westwoodps.com
Westwood Professional Services, Inc.

DETAILS

PROJECT NUMBER: 0027067.00

SHEET NUMBER: 9 OF 18
DATE: 05/25/22

© 2021 Westwood Professional Services, Inc.

Call 48 Hours before digging:
811 or call811.com
Common Ground Alliance

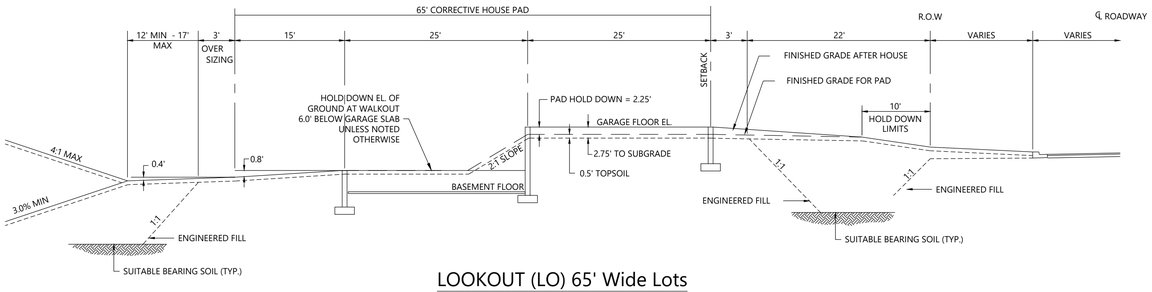

LOOKOUT (LO) 65' Wide Lots

N.T.S.

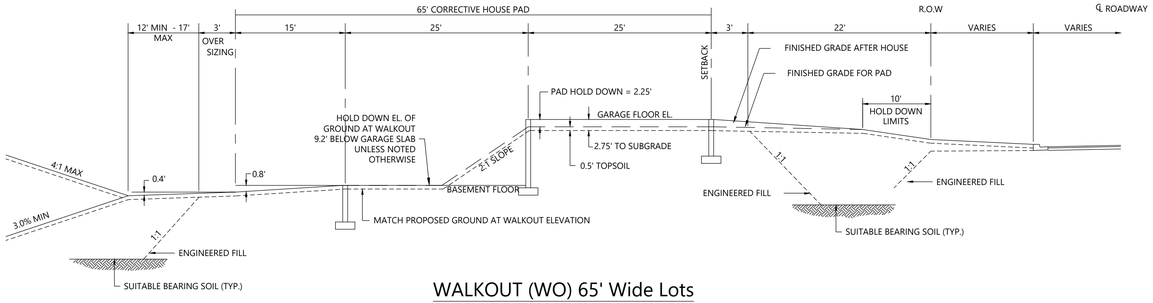

WALKOUT (WO) 65' Wide Lots

N.T.S.

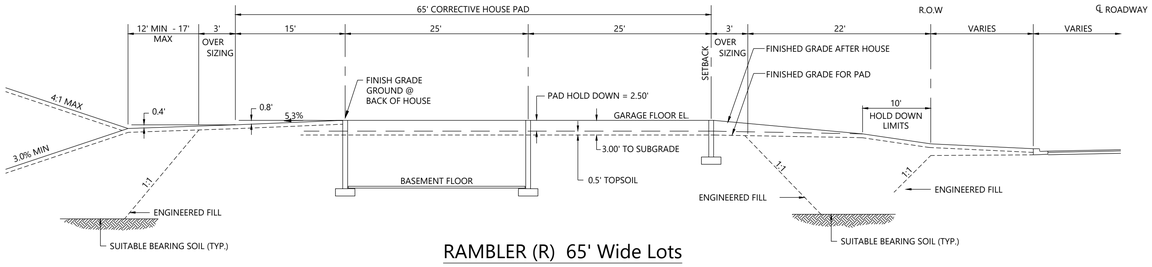

RAMBLER (R) 65' Wide Lots

N.T.S.

N:\0027067.00\DWG\CIVIL\GRADING\0027067S-DTF02.DWG

RIVERTOWN HEIGHTS

DESIGNED: FDH II
CHECKED: JHB
DRAWN: CTY
HORIZONTAL SCALE: ###
VERTICAL SCALE: ### OR ##

INITIAL ISSUE: 04/29/22
REVISIONS:
1 05/25/22 REVISED FOR CITY COMMENTS
2 . .
3 . .
4 . .
5 . .

PREPARED FOR:

DR HORTON, INC. - MINNESOTA

20860 KENBRIDGE COURT, SUITE 100
LAKEVILLE, MINNESOTA 55044

I HEREBY CERTIFY THAT THIS PLAN WAS PREPARED BY ME OR UNDER MY DIRECT SUPERVISION AND THAT I AM A DULY LICENSED PROFESSIONAL ENGINEER UNDER THE LAWS OF THE STATE OF MINNESOTA.

JOHN H. BENDER
DATE: 05/25/22 LICENSE NO. 43358

RIVERTOWN HEIGHTS

CHASKA, MN

Westwood

Phone (952) 937-5150 12701 Whitewater Drive, Suite #300
Fax (952) 937-5822 Minnetonka, MN 55343
Toll Free (888) 937-5150 westwoodps.com

Westwood Professional Services, Inc.

DETAILS

PROJECT NUMBER: 0027067.00

SHEET NUMBER: 10 OF 18

DATE: 05/25/22

© 2021 Westwood Professional Services, Inc.

Call 48 Hours before digging:
811 or call811.com
Common Ground Alliance

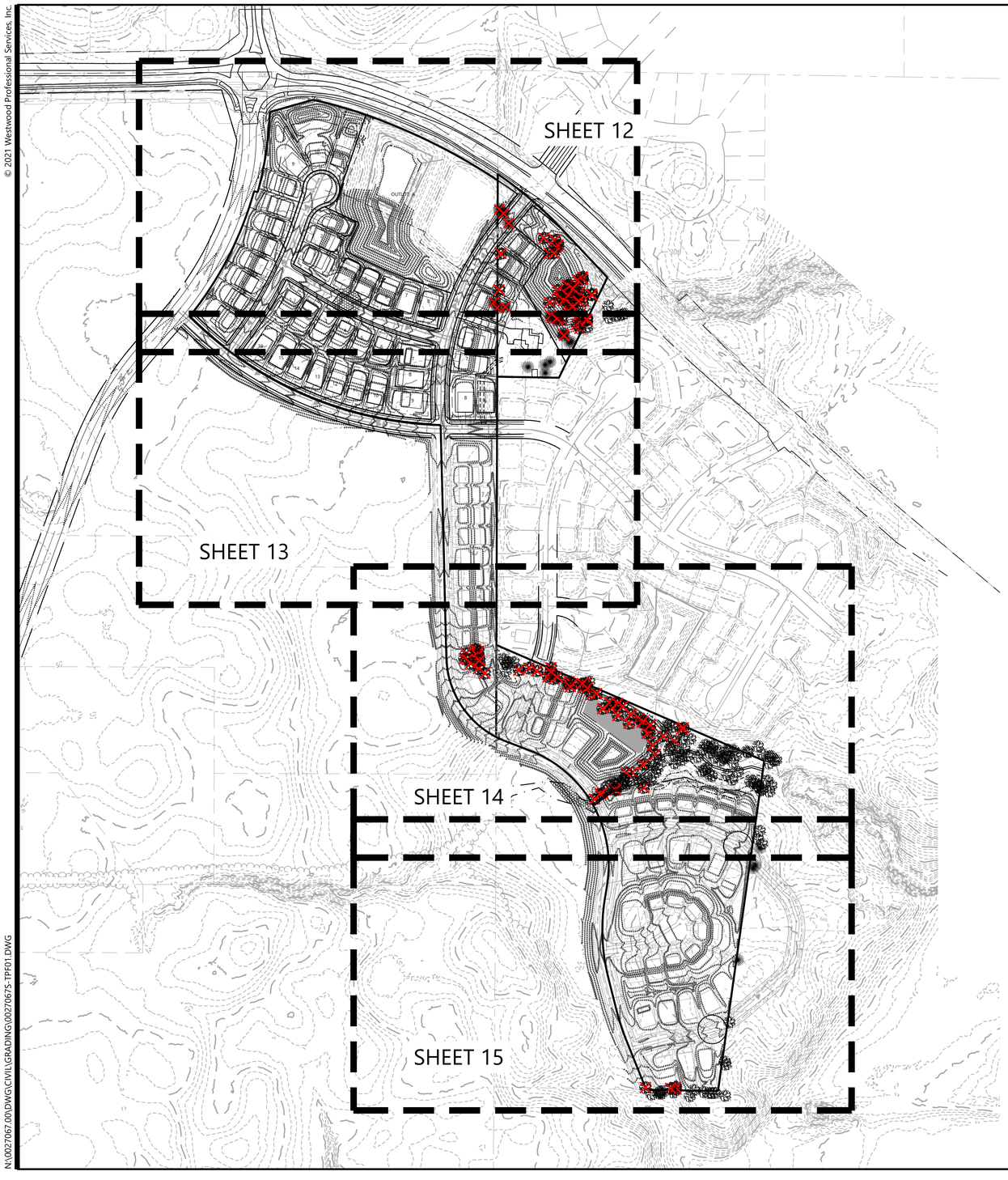

TREE INVENTORY REGULATIONS

SIGNIFICANT TREES:
DECIDUOUS HARDWOOD TREES - 12" DBH OR LARGER
CONIFEROUS TREES - 15' HT. OR LARGER
CONIFEROUS TREES CONVERSION RATE: 1' HT. = 2.4" DBH 15' HT. = 7" DBH

TREE INVENTORY CALCULATIONS

Tree Inventory Calculations	
Total Healthy Caliper Inches Onsite	2,396 DBH In.
Total Healthy Trees Onsite	166 Trees
Total Healthy Caliper Inches Saved	991 DBH In.
Total Healthy Trees Saved	70 Trees
Total Healthy Caliper Inches Removed	1,405 DBH In.
Total Healthy Trees Removed	96 Trees

LEGEND

- EXISTING DECIDUOUS TREE TO REMAIN
- EXISTING DECIDUOUS TREE TO BE REMOVED
- EXISTING CONIFEROUS TREE TO REMAIN
- EXISTING CONIFEROUS TREE TO BE REMOVED

TREE PROTECTION DETAIL

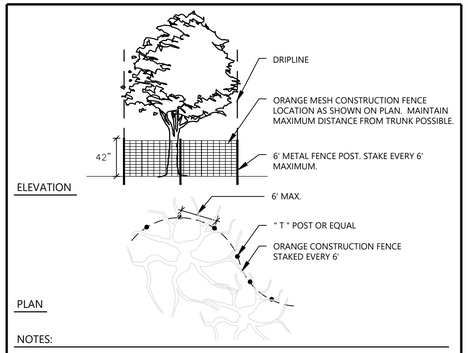

NOTES:

1. PRUNING WILL BE DONE BY PROFESSIONALS DURING APPROPRIATE PRUNING SEASON.
2. NO STORAGE OF MATERIALS, OPERATION OF MACHINERY, OR DEVELOPMENT OF ANY SORT WILL OCCUR WITHIN THE FENCE-LINE WITHOUT APPROVAL IN WRITING FROM THE CITY.
3. SITE GRADING TO BE DONE ONLY AFTER PROTECTIVE MEASURES HAVE BEEN TAKEN, CITY HAS APPROVED FENCING LOCATIONS, AND ALL CONTRACTORS HAVE BEEN BRIEFED ON TREE PRESERVATION TECHNIQUES.

Westwood

1" = 200'
0' 200' 400' 600'

CONSTRUCTION PLANS

N:\0027067.00\DWG\CIVIL\GRADING\0027067S-TPF01.DWG

RIVERTOWN HEIGHTS

DESIGNED: FDH II
CHECKED: JHB
DRAWN: CTY
HORIZONTAL SCALE: 200'
VERTICAL SCALE: 40' OR 20'

INITIAL ISSUE: 04/29/22
REVISIONS:
1 05/25/22 REVISED FOR CITY COMMENTS
2 . .
3 . .
4 . .
5 . .

PREPARED FOR:

DR HORTON, INC. - MINNESOTA
20860 KENBRIDGE COURT, SUITE 100
LAKEVILLE, MINNESOTA 55044

I HEREBY CERTIFY THAT THIS PLAN WAS PREPARED BY ME OR UNDER MY DIRECT SUPERVISION AND THAT I AM A DULY LICENSED LANDSCAPE ARCHITECT UNDER THE LAWS OF THE STATE OF MINNESOTA

CORY MEYER
DATE: 05/25/22 LICENSE NO. 26971

RIVERTOWN HEIGHTS
CHASKA, MN

Westwood
Phone (952) 937-5150 12701 Whitewater Drive, Suite #300
Fax (952) 937-5822 Minnetonka, MN 55343
Toll Free (888) 937-5150 westwoodps.com
Westwood Professional Services, Inc.

TREE PRESERVATION PLAN - OVERALL

PROJECT NUMBER: 0027067.00

SHEET NUMBER: 11 OF 18
DATE: 05/25/22

© 2021 Westwood Professional Services, Inc.

Call 48 Hours before digging:
811 or call811.com
Common Ground Alliance

1" = 50'
0' 50' 100' 150'

CONSTRUCTION PLANS

OUTLOT A

OUTLOT B

TREE PROTECTION FENCE (TYP.)

RIVERTOWN HEIGHTS

N:\0027067.00\DWG\CIVIL\GRADING\0027067S-TPP01.DWG

DESIGNED:	FDH II
CHECKED:	JHB
DRAWN:	CTY
HORIZONTAL SCALE:	50'
VERTICAL SCALE:	10' OR 5'

INITIAL ISSUE: 04/29/22
REVISIONS:
1 05/25/22 REVISED FOR CITY COMMENTS
2 . .
3 . .
4 . .
5 . .

PREPARED FOR:

DR HORTON, INC. - MINNESOTA

20860 KENBRIDGE COURT, SUITE 100
LAKEVILLE, MINNESOTA 55044

I HEREBY CERTIFY THAT THIS PLAN WAS PREPARED BY ME OR UNDER MY DIRECT SUPERVISION AND THAT I AM A DULY LICENSED LANDSCAPE ARCHITECT UNDER THE LAWS OF THE STATE OF MINNESOTA

CORY MEYER
DATE: 05/25/22 LICENSE NO. 26971

RIVERTOWN HEIGHTS

CHASKA, MN

Westwood

Phone (952) 937-5150
Fax (952) 937-5822
Toll Free (888) 937-5150

12701 Whitewater Drive, Suite #300
Minnetonka, MN 55343
westwoodps.com

Westwood Professional Services, Inc.

TREE PRESERVATION PLAN

PROJECT NUMBER: 0027067.00

SHEET NUMBER: 12 OF 18

DATE: 05/25/22

© 2021 Westwood Professional Services, Inc.



CONSTRUCTION PLANS

RIVERTOWN HEIGHTS

N:\0027067.00\DWG\CIVIL\GRADING\0027067S-TPF01.DWG

DESIGNED:	FDH II
CHECKED:	JHB
DRAWN:	CTY
HORIZONTAL SCALE:	50'
VERTICAL SCALE:	10' OR 5'

INITIAL ISSUE: 04/29/22

REVISIONS:

1	05/25/22	REVISED FOR CITY COMMENTS
2	.	.
3	.	.
4	.	.
5	.	.

PREPARED FOR:

DR HORTON, INC. - MINNESOTA

20860 KENBRIDGE COURT, SUITE 100
LAKEVILLE, MINNESOTA 55044

I HEREBY CERTIFY THAT THIS PLAN WAS PREPARED BY ME OR UNDER MY DIRECT SUPERVISION AND THAT I AM A DULY LICENSED LANDSCAPE ARCHITECT UNDER THE LAWS OF THE STATE OF MINNESOTA.

CORY MEYER

DATE: 05/25/22 LICENSE NO. 26971

RIVERTOWN HEIGHTS

CHASKA, MN

Westwood

Phone (952) 937-5150
Fax (952) 937-5822
Toll Free (888) 937-5150

12701 Whitewater Drive, Suite #300
Minnetonka, MN 55343
westwoodps.com

Westwood Professional Services, Inc.

TREE PRESERVATION PLAN

PROJECT NUMBER: 0027067.00

SHEET NUMBER: 13 OF 18

DATE: 05/25/22

© 2021 Westwood Professional Services, Inc.

Call 48 Hours before digging:
811 or call811.com
Common Ground Alliance

1" = 50'
0' 50' 100' 150'

CONSTRUCTION PLANS



N:\0027067.00\DWG\CIVIL\GRADING\0027067S-TPF01.DWG

RIVERTOWN HEIGHTS

DESIGNED: FDH II
CHECKED: JHB
DRAWN: CTY
HORIZONTAL SCALE: 50'
VERTICAL SCALE: 10' OR 5'

INITIAL ISSUE: 04/29/22
REVISIONS:
1 05/25/22 REVISED FOR CITY COMMENTS
2 . .
3 . .
4 . .
5 . .

PREPARED FOR:

DR HORTON, INC. - MINNESOTA
20860 KENBRIDGE COURT, SUITE 100
LAKEVILLE, MINNESOTA 55044

I HEREBY CERTIFY THAT THIS PLAN WAS PREPARED BY ME OR UNDER MY DIRECT SUPERVISION AND THAT I AM A DULY LICENSED LANDSCAPE ARCHITECT UNDER THE LAWS OF THE STATE OF MINNESOTA

CORY MEYER
DATE: 05/25/22 LICENSE NO. 26971

RIVERTOWN HEIGHTS
CHASKA, MN

Westwood
Phone (952) 937-5150 12701 Whitewater Drive, Suite #300
Fax (952) 937-5822 Minnetonka, MN 55343
Toll Free (888) 937-5150 westwoodps.com
Westwood Professional Services, Inc.

TREE PRESERVATION PLAN

PROJECT NUMBER: 0027067.00

SHEET NUMBER: 14 OF 18
DATE: 05/25/22

© 2021 Westwood Professional Services, Inc.

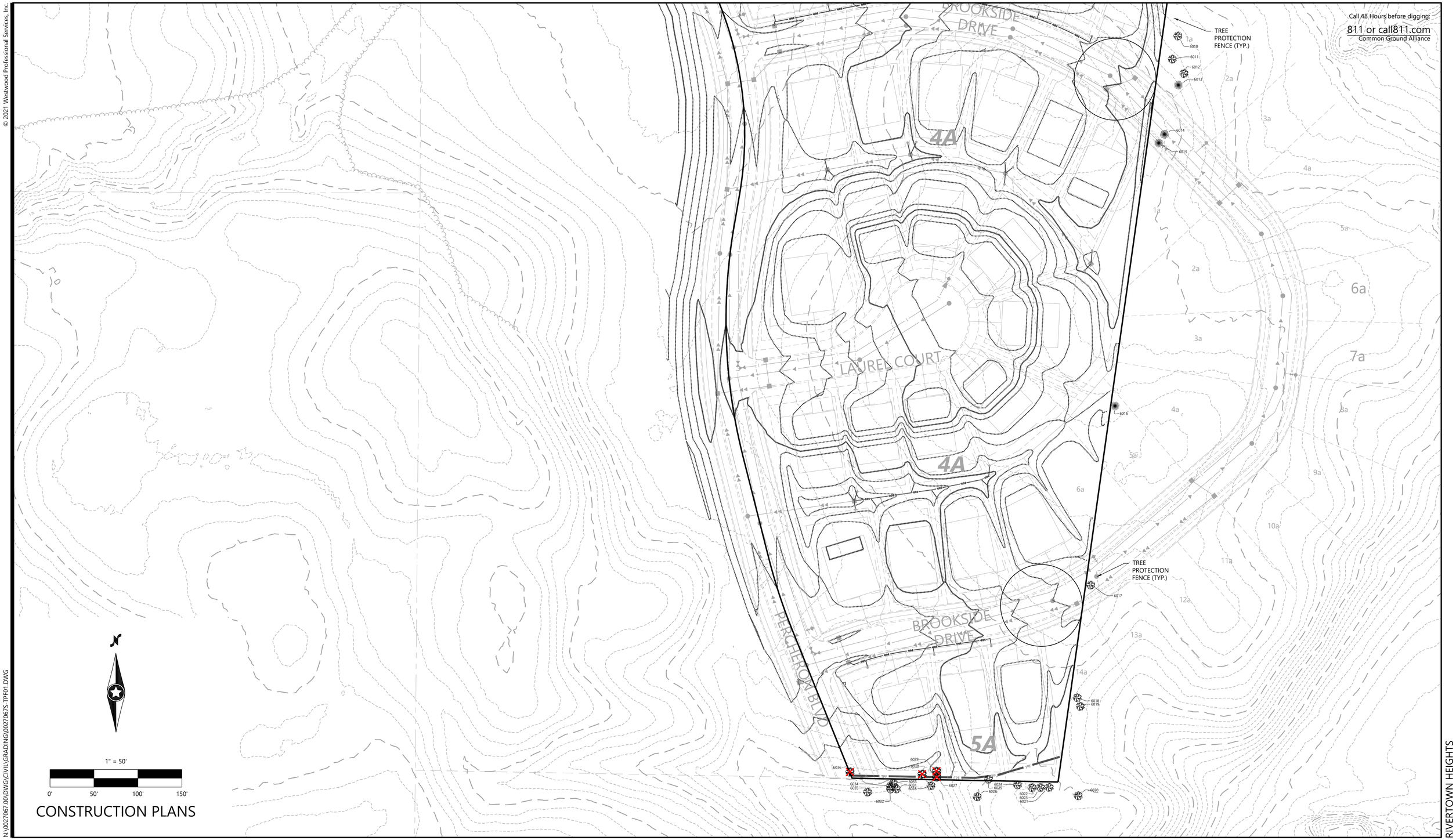

Call 48 Hours before digging:
811 or call811.com
Common Ground Alliance

CONSTRUCTION PLANS

N:\0027067.00\DWG\CIVIL\GRADING\0027067S-TPF01.DWG

RIVERTOWN HEIGHTS

DESIGNED:	FDH II
CHECKED:	JHB
DRAWN:	CTY
HORIZONTAL SCALE:	50'
VERTICAL SCALE:	10' OR 5'

INITIAL ISSUE:	04/29/22	
REVISIONS:		
1	05/25/22	REVISED FOR CITY COMMENTS
2	.	.
3	.	.
4	.	.
5	.	.

PREPARED FOR:

DR HORTON, INC. - MINNESOTA

20860 KENBRIDGE COURT, SUITE 100
LAKEVILLE, MINNESOTA 55044

I HEREBY CERTIFY THAT THIS PLAN WAS PREPARED BY ME OR UNDER MY DIRECT SUPERVISION AND THAT I AM A DULY LICENSED LANDSCAPE ARCHITECT UNDER THE LAWS OF THE STATE OF MINNESOTA

CORY MEYER
DATE: 05/25/22 LICENSE NO. 26971

RIVERTOWN HEIGHTS

CHASKA, MN

Westwood

Phone (952) 937-5150
Fax (952) 937-5822
Toll Free (888) 937-5150
12701 Whitewater Drive, Suite #300
Minnetonka, MN 55343
westwoodps.com

Westwood Professional Services, Inc.

TREE PRESERVATION PLAN

PROJECT NUMBER: 0027067.00

SHEET NUMBER: 15 OF 18

DATE: 05/25/22

© 2021 Westwood Professional Services, Inc.

Call 48 Hours before digging:
811 or call811.com
Common Ground Alliance

TREE TAG	SPECIES	SIZE (DBH)	MULTI	NOTES	TREE TYPE	STATUS
5001	Colorado Spruce	10			Coniferous	Removed
5002	Eastern Red Cedar	14			Coniferous	Removed
5003	Colorado Spruce	9			Coniferous	Removed
5004	Boxelder	22			Deciduous	Removed
5005	Green and White Ash	17			Deciduous	Removed-Exempt-EAB
5006	Colorado Spruce	8			Coniferous	Removed
5007	Colorado Spruce	12			Coniferous	Removed
5008	Colorado Spruce	10			Coniferous	Removed
5009	Green and White Ash	12			Deciduous	Removed-Exempt-EAB
5010	Bur Oak	15			Deciduous	Removed
5011	Sugar Maple	12			Deciduous	Removed
5012	Green and White Ash	13			Deciduous	Removed-Exempt-EAB
5013	Green and White Ash	15			Deciduous	Removed-Exempt-EAB
5014	Boxelder	16			Deciduous	Removed
5015	Hackberry	16			Deciduous	Removed
5016	Boxelder	13			Deciduous	Removed
5017	Green and White Ash	19			Deciduous	Removed-Exempt-EAB
5018	Boxelder	14			Deciduous	Removed
5019	Boxelder	15			Deciduous	Removed
5020	Black Willow	17		bd 50% dead	Deciduous	Removed-Exempt-bd
5021	Boxelder	14	x	bd	Deciduous	Removed
5022	Boxelder	16	x	pd	Deciduous	Removed
5023	Boxelder	14			Deciduous	Removed
5024	Boxelder	16			Deciduous	Removed
5025	Boxelder	13			Deciduous	Removed
5026	Boxelder	15			Deciduous	Removed
5027	Boxelder	13			Deciduous	Removed
5028	Boxelder	17	x	pd	Deciduous	Removed
5029	Boxelder	17			Deciduous	Removed
5030	Green and White Ash	16			Deciduous	Removed-Exempt-EAB
5031	Boxelder	12			Deciduous	Removed
5032	Boxelder	12			Deciduous	Removed
5033	Boxelder	16		bd 25% dead	Deciduous	Removed-Exempt-bd
5034	Boxelder	22			Deciduous	Removed
5035	Boxelder	16			Deciduous	Removed
5036	Boxelder	12			Deciduous	Removed
5037	Boxelder	23			Deciduous	Removed
5038	Boxelder	20			Deciduous	Removed
5039	Green and White Ash	19			Deciduous	Removed-Exempt-EAB
5040	Northern White Cedar	6	x		Coniferous	Saved
5041	Northern White Cedar	4	x	stem 4 in	Coniferous	Saved
5042	Colorado Spruce	10			Coniferous	Saved
5043	Colorado Spruce	10			Coniferous	Saved
5044	Colorado Spruce	8			Coniferous	Saved
5045	Colorado Spruce	16			Coniferous	Saved
5046	Boxelder	13			Deciduous	Removed
5047	Boxelder	12	x		Deciduous	Removed
5048	Boxelder	14	x		Deciduous	Removed
5049	Boxelder	16			Deciduous	Removed
5050	Boxelder	17			Deciduous	Offsite
5051	Boxelder	16			Deciduous	Removed
5052	Hackberry	15			Deciduous	Removed
5053	Boxelder	20			Deciduous	Removed
5054	Boxelder	18			Deciduous	Removed
5055	Basswood	48	x	pd	Deciduous	Offsite
5056	Basswood	16			Deciduous	Offsite
5057	Boxelder	13		bd 70% dead	Deciduous	Offsite
5058	Basswood	16			Deciduous	Offsite
5059	American Elm	16			Deciduous	Offsite
5060	Siberian Elm	12			Deciduous	Removed-Exempt-Invasive
5061	Siberian Elm	36			Deciduous	Removed-Exempt-Invasive
5062	Boxelder	20			Deciduous	Removed
5063	Unkown Deciduous Tree	14		dd	Deciduous	Removed
5064	Black Willow	23			Deciduous	Removed
5065	Black Willow	20			Deciduous	Removed
5066	Boxelder	16			Deciduous	Removed
5067	Boxelder	12			Deciduous	Removed
5068	Siberian Elm	17			Deciduous	Removed-Exempt-Invasive
5069	Boxelder	15			Deciduous	Removed
5070	Boxelder	13			Deciduous	Removed
5071	Boxelder	12	x		Deciduous	Removed
5072	Boxelder	20			Deciduous	Saved
5073	Hackberry	12			Deciduous	Removed
5074	Boxelder	12			Deciduous	Removed
5075	American Elm	12			Deciduous	Removed
5076	Boxelder	12			Deciduous	Removed
5077	Boxelder	12			Deciduous	Removed
5078	Boxelder	12			Deciduous	Removed
5079	Boxelder	12			Deciduous	Removed
5080	Boxelder	27	x	pd	Deciduous	Removed
5081	Boxelder	19	x	s pd	Deciduous	Offsite
5082	Boxelder	17	x		Deciduous	Removed
5083	Boxelder	24			Deciduous	Removed
5084	Boxelder	15	x	pd	Deciduous	Removed
5085	Boxelder	15			Deciduous	Removed
5086	Boxelder	15	x		Deciduous	Removed
5087	Boxelder	15		bd 40% dead	Deciduous	Removed-Exempt-bd
5088	Boxelder	14	x		Deciduous	Removed
5089	Boxelder	14	x		Deciduous	Removed
5090	Cottonwood	19			Deciduous	Removed
5091	Boxelder	14			Deciduous	Removed
5092	Boxelder	12		pd 60% dead	Deciduous	Removed-Exempt-pd
5093	Boxelder	16	x		Deciduous	Saved
5094	Black Walnut	16	x		Deciduous	Saved
5095	Siberian Elm	13			Deciduous	Removed-Exempt-Invasive
5096	Boxelder	14			Deciduous	Removed
5097	Bitternut Hickory	13			Deciduous	Saved
5098	Boxelder	14	x		Deciduous	Removed
5099	Basswood	22	x		Deciduous	Removed
5100	Boxelder	17		pd 15% dead	Deciduous	Removed-Exempt-pd
5101	Boxelder	13			Deciduous	Saved
5102	Basswood	12	x		Deciduous	Saved
5103	Basswood	15			Deciduous	Saved
5104	Boxelder	12			Deciduous	Saved
5105	Boxelder	13	x	pd	Deciduous	Saved
5106	Boxelder	14			Deciduous	Saved
5107	Boxelder	13			Deciduous	Saved
5108	Bitternut Hickory	15			Deciduous	Removed
5109	American Elm	23		dd	Deciduous	Removed
5110	Boxelder	14			Deciduous	Saved
5111	Boxelder	12	x		Deciduous	Removed
5112	Boxelder	16		bd 40% dead	Deciduous	Removed-Exempt-bd
5113	Black Willow	14	x		Deciduous	Removed
5114	Basswood	22	x		Deciduous	Removed
5115	Basswood	12	x		Deciduous	Saved
5116	Basswood	12			Deciduous	Saved
5117	Basswood	16	x		Deciduous	Saved
5118	Siberian Elm	13			Deciduous	Saved-Exempt-Invasive
5119	Basswood	20	x		Deciduous	Saved
5120	Basswood	12			Deciduous	Saved
5121	Basswood	14	x		Deciduous	Saved
5122	Basswood	17	x		Deciduous	Saved
5123	Basswood	13	x		Deciduous	Saved
5124	Basswood	12			Deciduous	Saved
5125	Sugar Maple	17	x	bd	Deciduous	Saved
5126	Boxelder	14			Deciduous	Saved
5127	Basswood	14	x		Deciduous	Saved
5128	Boxelder	14		bd 70% dead	Deciduous	Saved-Exempt-bd
5129	Boxelder	22	x		Deciduous	Saved
5130	Basswood	20	x		Deciduous	Saved
5131	Hackberry	15			Deciduous	Saved
5132	Boxelder	12	x		Deciduous	Saved
5133	Black Walnut	14			Deciduous	Saved
5134	Bur Oak	16			Deciduous	Saved
5135	Hackberry	12	x		Deciduous	Saved
5136	Basswood	28	x		Deciduous	Saved
5137	Boxelder	12	x		Deciduous	Saved
5138	Boxelder	12	x		Deciduous	Saved
5139	Boxelder	15			Deciduous	Saved
6001	Boxelder	14			Deciduous	Saved
6002	Boxelder	19			Deciduous	Saved
6003	Boxelder	13			Deciduous	Saved
6004	Boxelder	15			Deciduous	Offsite
6005	Boxelder	14			Deciduous	Offsite
6006	Boxelder	12	x		Deciduous	Saved
6007	Boxelder	12			Deciduous	Offsite
6008	Boxelder	14			Deciduous	Offsite
6009	Hackberry	14			Deciduous	Offsite
6010	Boxelder	16			Deciduous	Offsite
6011	Boxelder	15			Deciduous	Offsite
6012	Boxelder	14			Deciduous	Offsite
6013	Eastern Red Cedar	3			Coniferous	Offsite
6014	Eastern Red Cedar	4			Coniferous	Offsite
6015	Eastern Red Cedar	5			Coniferous	Offsite
6016	Eastern Red Cedar	7			Coniferous	Offsite
6017	Boxelder	14		pd 50% dead	Deciduous	Offsite
6018	Siberian Elm	34			Deciduous	Offsite
6019	Siberian Elm	22			Deciduous	Offsite
6020	Red Oak	21			Deciduous	Offsite
6021	Basswood	19			Deciduous	Offsite
6022	Sugar Maple	12			Deciduous	Offsite
6023	Red Oak	15			Deciduous	Offsite
6024	Siberian Elm	15	x		Deciduous	Offsite
6025	Bur Oak	18			Deciduous	Saved
6026	American Elm	14			Deciduous	Offsite
6027	American Elm	15			Deciduous	Removed
6028	Slippery Elm	12			Deciduous	Offsite
6029	American Elm	16			Deciduous	Removed
6030	American Elm	12			Deciduous	Removed
6031	Bur Oak	27			Deciduous	Offsite
6032	Boxelder	12			Deciduous	Offsite
6033	Boxelder	22			Deciduous	Offsite
6034	American Elm	16		dd	Deciduous	Offsite
6035	Sugar Maple	17			Deciduous	Offsite
6036	Basswood	32			Deciduous	Removed
6037	Boxelder	12		pd 50% dead	Deciduous	Saved-Exempt-pd
6038	Boxelder	15			Deciduous	Saved
6039	Boxelder	15	x	pd	Deciduous	Saved
6040	Unkown Deciduous Tree	18		dd	Deciduous	Saved
6041	Siberian Elm	18			Deciduous	Saved-Exempt-Invasive
6042	Boxelder	12			Deciduous	Removed
6043	American Elm	18		pd 20% dead	Deciduous	Removed-Exempt-pd
6044	American Elm	12			Deciduous	Removed
6045	Siberian Elm	22		bd 25%	Deciduous	Removed-Exempt-Invasive
6046	Boxelder	16			Deciduous	Removed
6047	Boxelder	14	x	pd	Deciduous	Removed
6048	Boxelder	14	x		Deciduous	Removed
6049	Boxelder	18		pd 20% dead	Deciduous	Removed-Exempt-pd
6050	Silver Maple	14	x		Deciduous	Removed
6051	Cottonwood	13			Deciduous	Removed
6052	Boxelder	13	x		Deciduous	Removed
6053	Boxelder	22	x		Deciduous	Removed
6054	Boxelder	12	x		Deciduous	Removed
6055	Boxelder	18			Deciduous	Removed
6056	Cottonwood	33			Deciduous	Removed
6057	Boxelder	14		bd 40% dead	Deciduous	Removed-Exempt-bd
6058	Boxelder	13			Deciduous	Saved
6059	Boxelder	13			Deciduous	Saved
6060	Boxelder	18			Deciduous	Saved
6061	Boxelder	13			Deciduous	Removed
6062	Siberian Elm	14			Deciduous	Removed-Exempt-Invasive
6063	Siberian Elm	14	x		Deciduous	Saved-Exempt-Invasive
6064	Boxelder	15			Deciduous	Saved
6065	Boxelder	15	x	pd	Deciduous	Saved
6066	Boxelder	14	x		Deciduous	Saved
6067	Siberian Elm	16			Deciduous	Saved-Exempt-Invasive
6068	Boxelder	13	x		Deciduous	Saved
6069	Boxelder	13			Deciduous	Saved
6070	Boxelder	12			Deciduous	Saved
6071	Boxelder	12			Deciduous	Saved
6072	Boxelder	13			Deciduous	Saved
6073	Boxelder	13			Deciduous	Saved
6074	American Elm	13			Deciduous	Saved
6075	American Elm	14			Deciduous	Saved
6076	Boxelder	15			Deciduous	Saved
6077	Boxelder	16			Deciduous	Saved
6078	Boxelder	14			Deciduous	Saved
6079	Boxelder	12			Deciduous	Saved
6080	American Elm	19			Deciduous	Saved
6081	Boxelder	12			Deciduous	Saved
6082	Boxelder	12			Deciduous	Saved
6083	Boxelder	15			Deciduous	Offsite
6084	Boxelder	12			Deciduous	Offsite
6085	Boxelder	23			Deciduous	Offsite
6086	Boxelder	16		bd 80% dead	Deciduous	Offsite
6087	Boxelder	14		pd 70% dead	Deciduous	Offsite
6088	Boxelder	16			Deciduous	Offsite
6089	Boxelder	20		pd 75% dead	Deciduous	Offsite
6090	Boxelder	17			Deciduous	Offsite
6091	Boxelder	22			Deciduous	Offsite
10000	Arborvitae	2	x	arbo-16 Stems	Coniferous	Removed
10001	Arborvitae	2	x	arbo-12 Stems	Coniferous	Removed
10002	Arborvitae	4	x	arbo	Coniferous	Removed
10003	Arborvitae	3	x	arbo	Coniferous	Removed
10004	Arborvitae	6	x	arbo	Coniferous	Removed
10005	Arborvitae	3	x	arbo	Coniferous	Removed
10006	Arborvitae	3	x	arbo-4 Stem 2indbd	Coniferous	Removed

N:\0027067.00\DWG\CIVIL\GRADING\0027067S-TP101.DWG

CONSTRUCTION PLANS

RIVERTOWN HEIGHTS

DESIGNED: FDH II
CHECKED: JHB
DRAWN: CTY
HORIZONTAL SCALE: ##########
VERTICAL SCALE: ### OR ##

INITIAL ISSUE: 04/29/22
REVISIONS:
1 05/25/22 REVISED FOR CITY COMMENTS
2 . .
3 . .
4 . .
5 . .

PREPARED FOR:
DR HORTON, INC. - MINNESOTA
20860 KENBRIDGE COURT, SUITE 100
LAKEVILLE, MINNESOTA 55044

I HEREBY CERTIFY THAT THIS PLAN WAS PREPARED BY ME OR UNDER MY DIRECT SUPERVISION AND THAT I AM A DULY LICENSED LANDSCAPE ARCHITECT UNDER THE LAWS OF THE STATE OF MINNESOTA
CORY MEYER
DATE: 05/25/22 LICENSE NO. 26971

RIVERTOWN HEIGHTS
CHASKA, MN

Westwood
Phone (952) 937-5150 12701 Whitewater Drive, Suite #300
Fax (952) 937-5822 Minnetonka, MN 55343
Toll Free (888) 937-5150 westwoodps.com
Westwood Professional Services, Inc.

TREE PRESERVATION DATA

PROJECT NUMBER: 0027067.00

SHEET NUMBER: 16 OF 18
DATE: 05/25/22

© 2021 Westwood Professional Services, Inc.



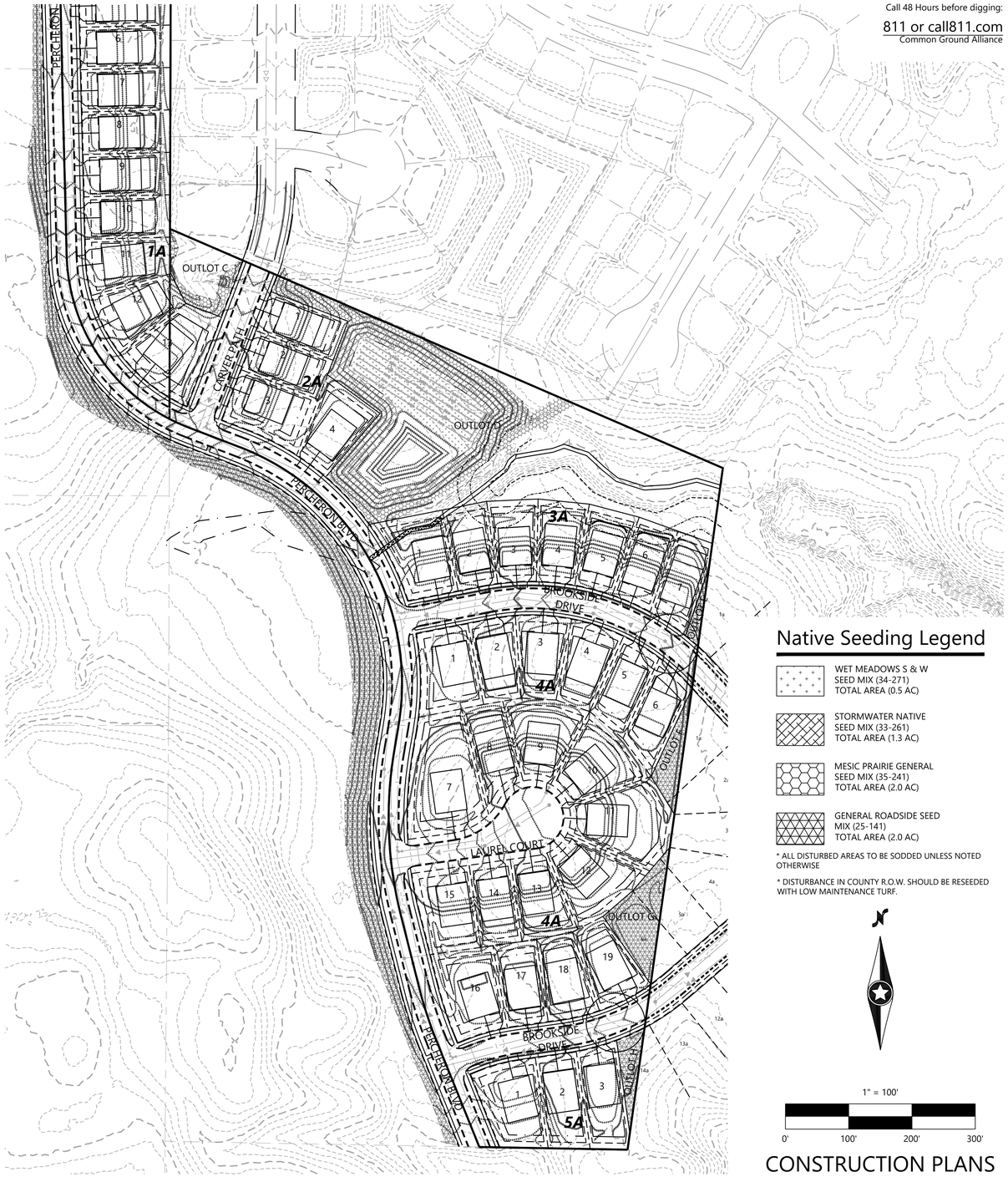

Call 48 Hours before digging:
811 or call811.com
Common Ground Alliance

Native Seeding Legend

- WET MEADOWS S & W SEED MIX (34-271) TOTAL AREA (0.5 AC)
- STORMWATER NATIVE SEED MIX (33-261) TOTAL AREA (1.3 AC)
- MESIC PRAIRIE GENERAL SEED MIX (35-241) TOTAL AREA (2.0 AC)
- GENERAL ROADSIDE SEED MIX (25-141) TOTAL AREA (2.0 AC)

* ALL DISTURBED AREAS TO BE SODDED UNLESS NOTED OTHERWISE

* DISTURBANCE IN COUNTY R.O.W. SHOULD BE RESEEDED WITH LOW MAINTENANCE TURF.

1" = 100'

0' 100' 200' 300'

CONSTRUCTION PLANS

RIVERTOWN HEIGHTS

N:\0027067.00\DWG\CIVIL\GRADING\0027067S-SEED.DWG

DESIGNED:	FDH II
CHECKED:	JHB
DRAWN:	CTY
HORIZONTAL SCALE:	100.000009'
VERTICAL SCALE:	20' OR 10'

INITIAL ISSUE: 04/29/22
REVISIONS:
1 . .
2 . .
3 . .
4 . .
5 . .

PREPARED FOR:

DR HORTON, INC. - MINNESOTA
20860 KENBRIDGE COURT, SUITE 100
LAKEVILLE, MINNESOTA 55044

I HEREBY CERTIFY THAT THIS PLAN WAS PREPARED BY ME OR UNDER MY DIRECT SUPERVISION AND THAT I AM A DULY LICENSED LANDSCAPE ARCHITECT UNDER THE LAWS OF THE STATE OF MINNESOTA

CORY MEYER
DATE: 05/25/22 LICENSE NO. 26971

RIVERTOWN HEIGHTS
CHASKA, MN

Westwood
Phone (952) 937-5150 12701 Whitewater Drive, Suite #300
Fax (952) 937-5822 Minnetonka, MN 55343
Toll Free (888) 937-5150 westwoodps.com
Westwood Professional Services, Inc.

SEEDING PLAN

PROJECT NUMBER: 0027067.00

SHEET NUMBER: 17 OF 18
DATE: 05/25/22

© 2021 Westwood Professional Services, Inc.

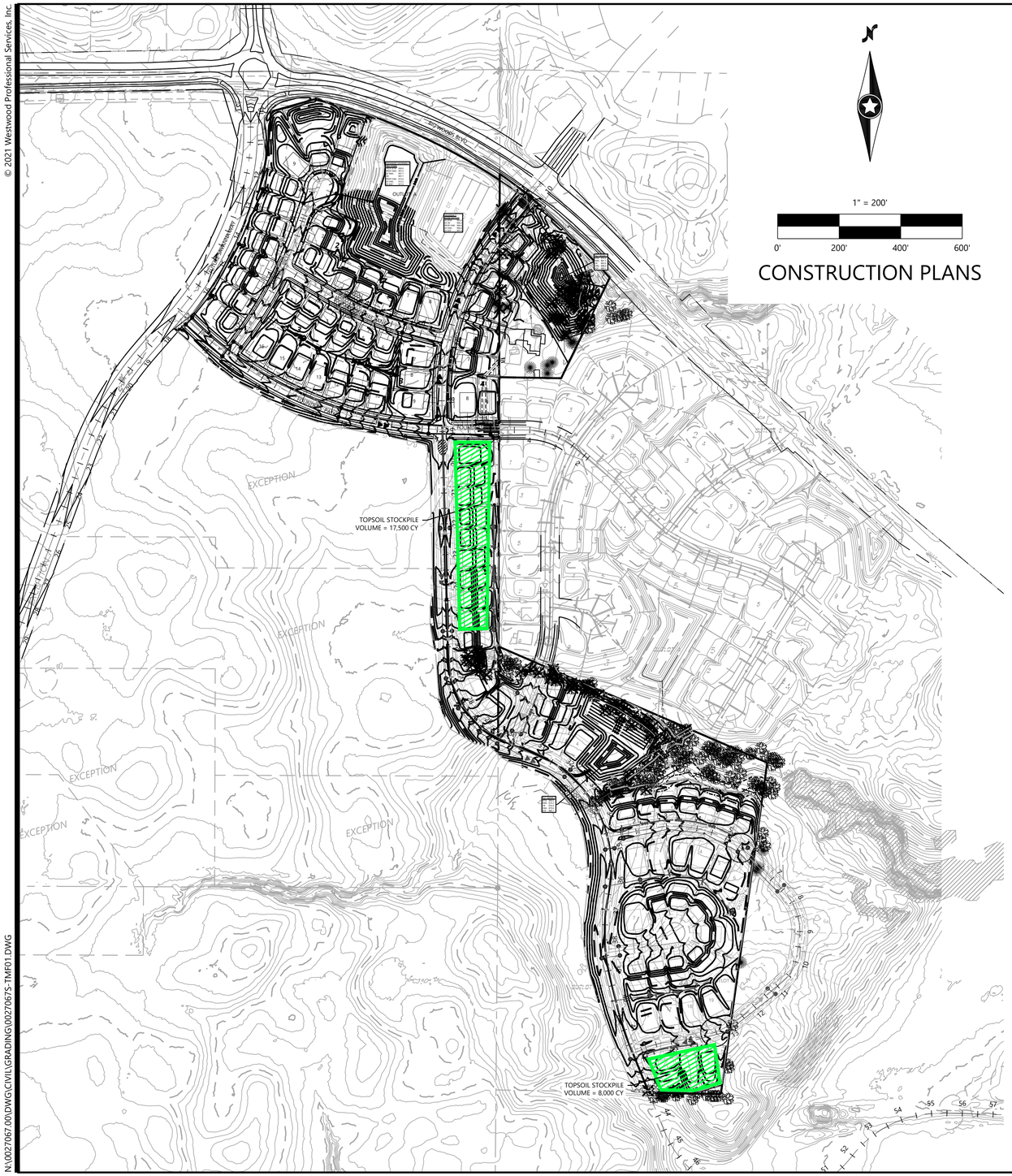

Call 48 Hours before digging:

811 or call811.com
Common Ground Alliance

TOPSOIL NOTES - PHASE 2

1. EXISTING ONSITE TOPSOIL WILL BE USED FOR RESPREAD. TESTING WILL BE COMPLETED IN ORDER TO ASSESS WETHER SOIL AMENDMENT WILL BE NECESSARY.
2. FOR TOPSOIL STRIPPING AND STOCKPILING
   - EXISTING TOPSOIL AVAILABLE ONSITE: 62,000 CY
   - TOPSOIL NEEDED TO RESTORE GREEN SPACES: 25,500 CY
   - TOTAL LOT AREA: 20.0 AC
   - EXISTING 1.0 FOOT OF AVERAGE DEPTH OF TOPSOIL AVAILABLE ONSITE
   - GRADING EQUIPMENT USED TO STRIP TOPSOILS SUCH AS DOZERS/SCRAPERS.
   - SILT FENCE WILL BE UTILIZED FOR EROSION CONTROL OF TOPSOIL STOCKPILES.
   - TEMPORARY SEED TOPSOIL STOCKPILES FOR EROSION CONTROL FOR STOCKPILES THAT WILL REMAIN IN PLACE FOR LONGER THAN 6 MONTHS.
3. STOCKPILING SAMPLING PROCEDURE
   - ONE SAMPLE SHALL BE COLLECTED PER 2,500 CUBIC YARDS OF STOCKPILE (A MINIMUM OF ONE SAMPLE SHALL BE TAKEN IF STOCKPILES ARE LESS THAN 2,500 CUBIC YARDS)
   - THE CONTRACTOR/SUPPLIER SHALL FORM A FACE FOR THE FULL HEIGHT OF THE STOCKPILE AT FOUR LOCATIONS.
   - A LOADER BUCKET OR SIMILAR EQUIPMENT SHALL THEN BE FILLED BY CHANNELING THE FULL HEIGHT OF THE STOCKPILE FACE, FROM THE BOTTOM TO THE TOP, IN ONE OPERATION.
   - THE BUCKET SHALL THEN BE LOWERED AND EMPTIED BY ROTATION TO FORM A SMALL PILE AT EACH SAMPLING LOCATION.
   - THE SAMPLER SHALL PLACE A SHOVEL FULL OF SOIL FROM EACH PILE INTO A LARGER CONTAINER. THE SOIL SHALL BE THOROUGHLY MIXED AND A SUFFICIENT AMOUNT OF MIXED TOPSOIL SHALL BE TAKEN TO FILL A STANDARD TOPSOILS SAMPLING CONTAINER.
   - SAMPLES SHALL BE SUBMITTED FOR ANALYSIS TO LAB QUALIFIED TO USE THE FOLLOWING TEST METHODS: ASTM D 422, ASTM D 2974, AND ASTM G 51. SAMPLES SHALL BE ANALYZED FOR CLAY, SILT, SAND, ORGANIC MATTER AND pH. FIELD COMPACTION TESTING SHALL ALSO BE COMPLETED. TOPSOIL SHALL MEET THE CARVER COUNTY TOPSOIL STANDARD (INCLUDED BELOW).
   - ADDITIONAL TOPSOIL SHALL NOT BE ADDED TO THE STOCKPILE AFTER SAMPLING
   - SAMPLE RESULTS SHALL BE SUBMITTED TO THE COUNTY FOR REVIEW. TEST RESULTS ARE VALID FOR 6 MONTHS.
   - IF TOPSOIL TESTING RESULTS DO NOT MEET THE MINIMUM REQUIREMENTS PER THE CARVER COUNTY WATERSHED MANAGEMENT ORGANIZATION TOPSOIL STANDARDS, THE EXISTING TOPSOIL MUST BE DE-COMPACTED TO A DEPTH OF 6 INCHES AND 2 INCHES OF COMPOST MUST BE INCORPORATED INTO IT.
   - APPROXIMATELY 5,500 CY OF COMPOST WILL BE REQUIRED IF TOPSOIL DOES NOT MEET MINIMUM REQUIREMENTS.
   - IF MINIMUM REQUIREMENTS ARE MET, NO AMENDMENTS ARE NEEDED.
4. CONSTRUCTION SCHEDULE AND PHASING:
   - GRADING AND TOPSOIL STRIPPING SHOULD BEGIN IN SPRING 2021
   - GREEN SPACES SHALL HAVE 6 INCHES OF TOPSOIL IN-PLACE AFTER GRADING HAS OCCURRED.
   - TOPSOIL IS TO BE REAPPLIED TO ALL DISTURBED AREAS, WITH THE EXCEPTION OF PROPOSED STREET AREAS.
   - INDIVIDUAL LOTS WILL HAVE 1 TO 1.5 INCHES OF TOPSOIL PUT IN-PLACE DURING MASS GRADING. AFTER FINAL GRADING HAS BEEN COMPLETED AN ADDITIONAL 6 INCHES WILL BE PUT IN-PLACE.
   - SOIL DECOMPOSITION TO A SIX-INCH DEPTH SHALL TAKE PLACE PRIOR TO PLACEMENT OF TOPSOIL.
   - STOCKPILES SHALL BE SAMPLED AND TESTED PRIOR TO TOPSOIL PLACEMENT. SEE TESTING PROCEDURES ABOVE.
   - IF TOPSOIL TESTING SHOWS THAT THE SOILS DO NOT MEET SPECIFICATIONS IN TABLE 2, SOIL SHALL BE AMENDED TO BRING THEM INTO COMPLIANCE.
   - HOME BUILDING AND FINAL LOT GRADING WILL TAKE PLACE FROM SUMMER OF 2021, UNTIL SPRING OF 2022.
   - TOPSOIL QUALITY AND DEPTH MUST BE VERIFIED BY COUNTY OR CITY STAFF PRIOR TO SEEDING OR SOD.

TOPSOIL STOCKPILE

COUNTY TOPSOIL STANDARD

PASSING PERCENTAGE (%)		MATERIAL TYPE			SOIL PROPERTIES	
SIEVE 3 / 4 IN	SIEVE #4	CLAY (%)	SILT (%)	SAND (%)	ORGANIC (%)	pH RANGE
100	85 - 100	5 - 30	5 - 35	38 - 75	3 - 15	6.1 - 7.5

N:\0027067.00\DWG\CIVIL\GRADING\0027067S-TMF01.DWG

RIVERTOWN HEIGHTS

DESIGNED:	FDH II
CHECKED:	JHB
DRAWN:	CTY
HORIZONTAL SCALE:	200'
VERTICAL SCALE:	40' OR 20'

INITIAL ISSUE: 04/29/22
REVISIONS:
1 05/25/22 REVISED FOR CITY COMMENTS
2 . .
3 . .
4 . .
5 . .

PREPARED FOR:

DR HORTON, INC. - MINNESOTA
20860 KENBRIDGE COURT, SUITE 100
LAKEVILLE, MINNESOTA 55044

I HEREBY CERTIFY THAT THIS PLAN WAS PREPARED BY ME OR UNDER MY DIRECT SUPERVISION AND THAT I AM A DULY LICENSED PROFESSIONAL ENGINEER UNDER THE LAWS OF THE STATE OF MINNESOTA

JOHN H. BENDER
DATE: 05/25/22 LICENSE NO. 43358

RIVERTOWN HEIGHTS
CHASKA, MN

Westwood
Phone (952) 937-5150 12701 Whitewater Drive, Suite #300
Fax (952) 937-5822 Minnetonka, MN 55343
Toll Free (888) 937-5150 westwoodps.com
Westwood Professional Services, Inc.

TOPSOIL MANAGEMENT PLAN

PROJECT NUMBER: 0027067.00

SHEET NUMBER: 18 OF 18
DATE: 05/25/22

© 2022 Westwood Professional Services, Inc.

CONSTRUCTION PLANS

FOR

SANITARY SEWER, WATERMAIN, STORM SEWER, AND STREETS

FOR

RIVERTOWN HEIGHTS

CHASKA, MN



Vicinity Map
(NOT TO SCALE)

PREPARED FOR:

DR HORTON, INC. - MINNESOTA

20860 KENBRIDGE COURT, SUITE 100
LAKEVILLE, MINNESOTA 55044
CONTACT: MIKE SUEL
PHONE: 952-985-7823
EMAIL: MSUEL@DRHORTON.COM

PREPARED BY:

Westwood

Phone (952) 937-5150 12701 Whitewater Drive, Suite #300
Fax (952) 937-5822 Minnetonka, MN 55343
Toll Free (888) 937-5150 westwoodps.com

Westwood Professional Services, Inc.

PROJECT NUMBER: 0027067.00
CONTACT: JOHN H. BENDER

SHEET INDEX

Sheet List Table	
SHEET NUMBER	SHEET TITLE
1	Cover
2	Overall
3	Sanitary Sewer and Watermain Construction Plans
4	Sanitary Sewer and Watermain Construction Plans
5	Sanitary Sewer and Watermain Construction Plans
6	Sanitary Sewer and Watermain Construction Plans
7	Street and Storm Sewer Construction Plans
8	Street and Storm Sewer Construction Plans
9	Street and Storm Sewer Construction Plans
10	Street and Storm Sewer Construction Plans
11	Street and Storm Sewer Construction Plans
12	Street and Storm Sewer Construction Plans
13	Street and Storm Sewer Construction Plans
14	Details
15	Details
16	Details
17	Details
18	Details
19	Details
20	Intersection Details
21	Intersection Details
22	Intersection Details

NO.	DATE	REVISION	SHEETS
1	05/25/22	REVISED FOR CITY COMMENTS	All
	.	.	
	.	.	
	.	.	
	.	.	
	.	.	
	.	.	
	.	.	
	.	.	
	.	.	

CONSTRUCTION PLANS
FOR
SANITARY SEWER, WATERMAIN, STORM SEWER, AND STREETS
FOR
RIVERTOWN HEIGHTS
CHASKA, MN

INITIAL SUBMITTAL DATE: 04/29/22 SHEET: 1 OF 22

© 2022 Westwood Professional Services, Inc.

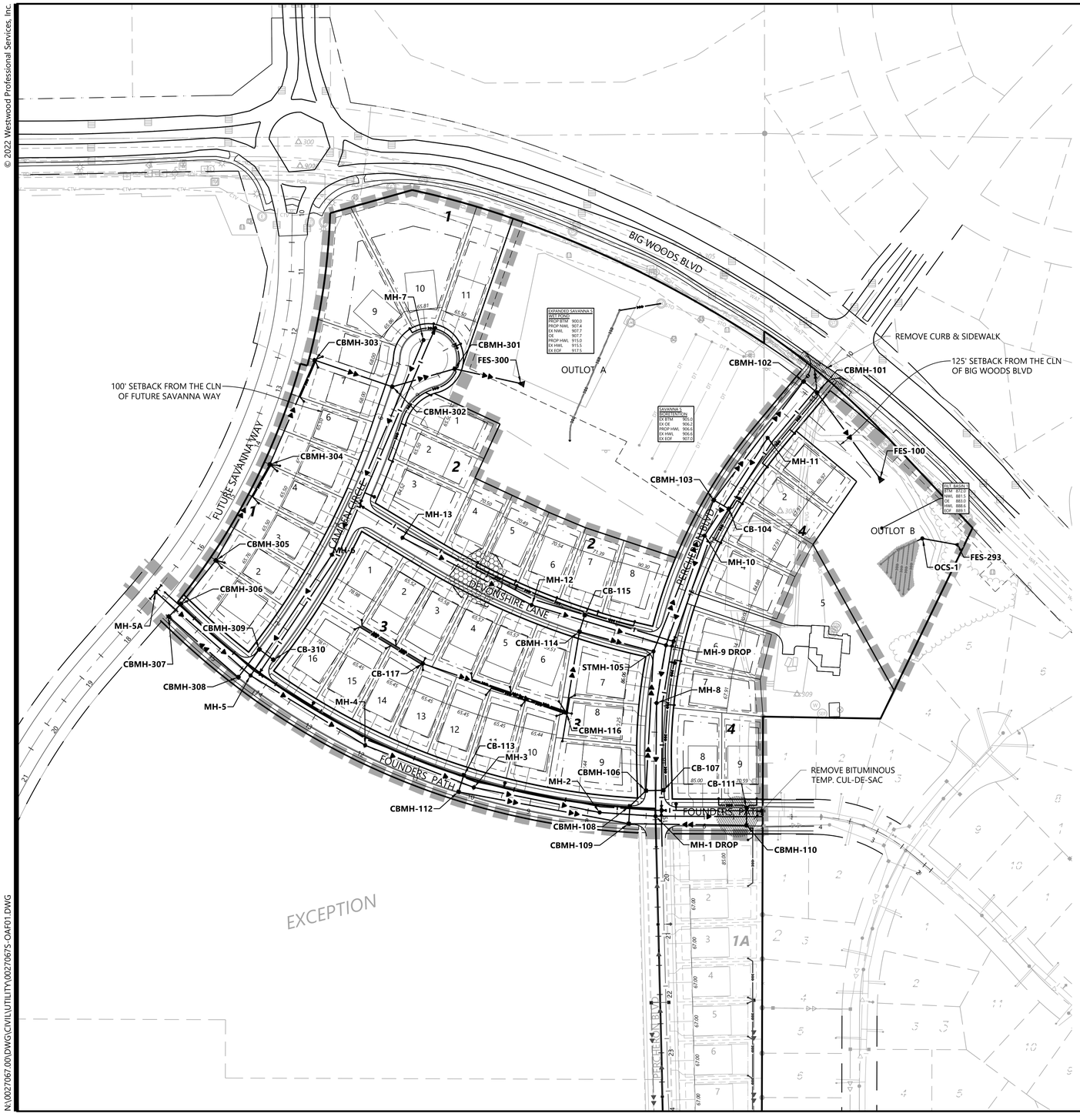

STORM SEWER CASTING SCHEDULE			
Structure			Casting Type
Number	Type	Dia.	
1	OCS	60"	SEE DETAIL
100	FES	15"	-
101	CBMH	48"	R-3067-V
102	CBMH	48"	R-3067-V
103	CBMH	48"	R-3067-V
104	CB	2'x 3'	R-3067-V
105	STMH	48"	R-1642B
106	CBMH	48"	R-3067-V
107	CB	2'x 3'	R-3067-V
108	CBMH	48"	R-3067-V
109	CBMH	48"	R-3067-V
110	CBMH	48"	R-3067-V
111	CB	2'x 3'	R-3067-V
112	CBMH	48"	R-3067-V
113	CB	2'x 3'	R-3067-V
114	CBMH	48"	R-3067-V
115	CB	2'x 3'	R-3067-V
116	CBMH	48"	R-4342
117	CB	2'x 3'	R-4342
278	STMH	48"	R-1642B
293	FES	27"	-
300	FES	18"	-
301	CBMH	48"	R-3067-V
302	CBMH	48"	R-3067-V
303	CBMH	48"	R-1642B
304	CBMH	48"	R-1642B
305	CBMH	48"	R-1642B
306	CBMH	48"	R-3067-V
307	CBMH	48"	R-3067-V
308	CBMH	48"	R-3067-V
309	CBMH	48"	R-3067-V
310	CB	2'x 3'	R-3067-V

Call 48 Hours before digging:
811 or call811.com
Common Ground Alliance

OVERALL UTILITY LEGEND

EXISTING	PROPOSED	FUTURE	
SAN			SANITARY SEWER
			STORM SEWER
DT			DRAIN TILE
WAT			WATER MAIN
WAT			HYDRANT

GENERAL UTILITY NOTES

1. THE CONTRACTOR SHALL VERIFY ALL EXISTING CONDITIONS PRIOR TO CONSTRUCTION AND NOTIFY THE OWNER OF ANY DIFFERENCES.
2. UNLESS OTHERWISE NOTED, ALL MATERIALS, CONST. TECHNIQUES AND TESTING SHALL CONFORM TO THE 2013 ED. OF THE "STANDARD UTILITIES SPECIFICATIONS FOR WATER MAIN AND SERVICE LINE INSTALLATION AND SANITARY SEWER AND STORM SEWER INSTALLATION BY THE CITY ENGINEERING ASSOCIATION OF MINN." AND TO THE "STANDARD SPECIFICATION FOR HIGHWAY CONSTRUCTION" MINN. DEPT. OF TRANS., AUGUST 31, 2016 INCLUDING THE CURRENT ADDENDUM. THE CONTRACTOR SHALL BE REQUIRED TO FOLLOW ALL PROCEDURES AS OUTLINED BY THE LOCAL AGENCY.
3. THE CONTRACTOR SHALL RECEIVE THE NECESSARY PERMITS FOR ALL WORK OUTSIDE OF THE PROPERTY LIMITS.
4. VERIFY EXISTING INVERT LOCATION & ELEVATION PRIOR TO BEGINNING CONSTRUCTION.
5. THE CONTRACTOR SHALL CONTACT "GOPHER STATE ONE CALL" FOR FOR UTILITY LOCATIONS PRIOR TO UTILITY INSTALLATION.

N

1" = 100'

0' 100' 200' 300'

CONSTRUCTION PLANS

RIVERTOWN HEIGHTS

N:\0027067.00\DWG\CIVIL\UTILITY\0027067S-OAF01.DWG

DESIGNED: FDH II
CHECKED: JHB
DRAWN: CTY
HORIZONTAL SCALE: 100'
VERTICAL SCALE: 20' OR 10'

INITIAL ISSUE: 04/29/22
REVISIONS:
1 05/25/22 REVISED FOR CITY COMMENTS
2 . .
3 . .
4 . .
5 . .

PREPARED FOR:

DR HORTON, INC. - MINNESOTA
20860 KENBRIDGE COURT, SUITE 100
LAKEVILLE, MINNESOTA 55044

I HEREBY CERTIFY THAT THIS PLAN WAS PREPARED BY ME OR UNDER MY DIRECT SUPERVISION AND THAT I AM A DULY LICENSED PROFESSIONAL ENGINEER UNDER THE LAWS OF THE STATE OF MINNESOTA
JOHN H. BENDER
DATE: 05/25/22 LICENSE NO. 43358

RIVERTOWN HEIGHTS
CHASKA, MN

Westwood
Phone (952) 937-5150 12701 Whitewater Drive, Suite #300
Fax (952) 937-5822 Minnetonka, MN 55343
Toll Free (888) 937-5150 westwoodps.com
Westwood Professional Services, Inc.

OVERALL

PROJECT NUMBER: 0027067.00

SHEET NUMBER: 2 OF 22
DATE: 05/25/22

© 2022 Westwood Professional Services, Inc.

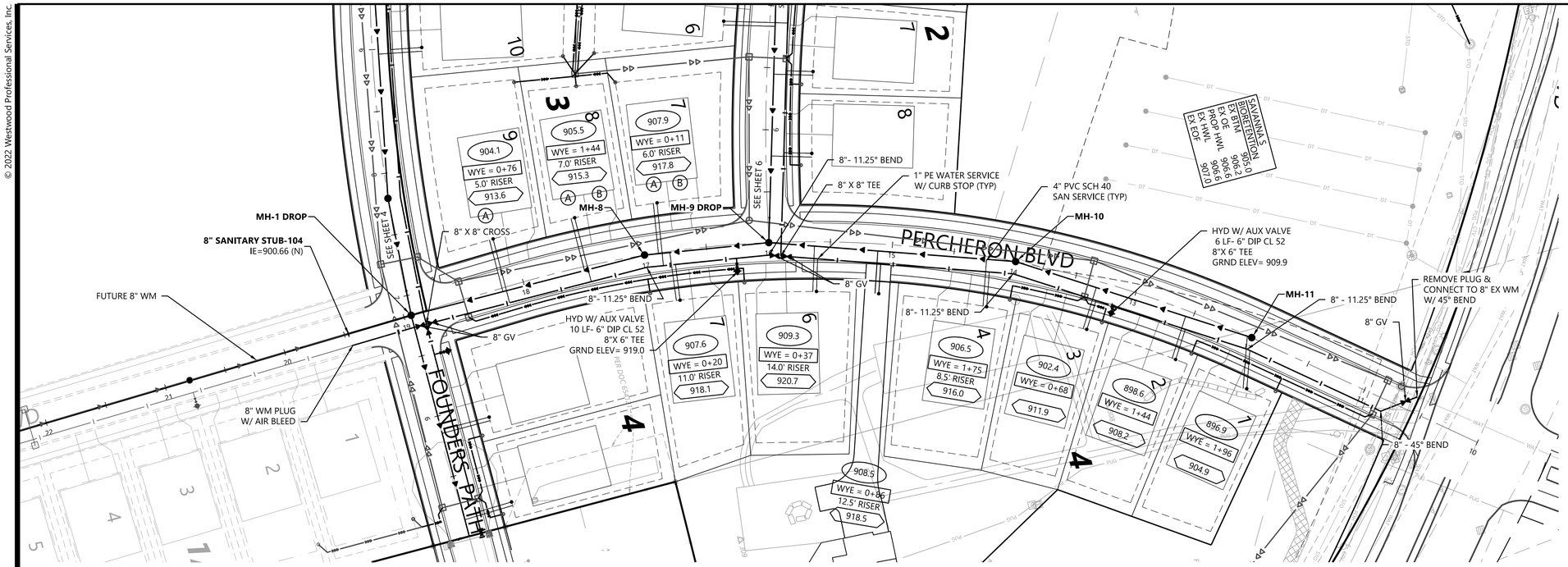

Street 1 - Percheron Blvd

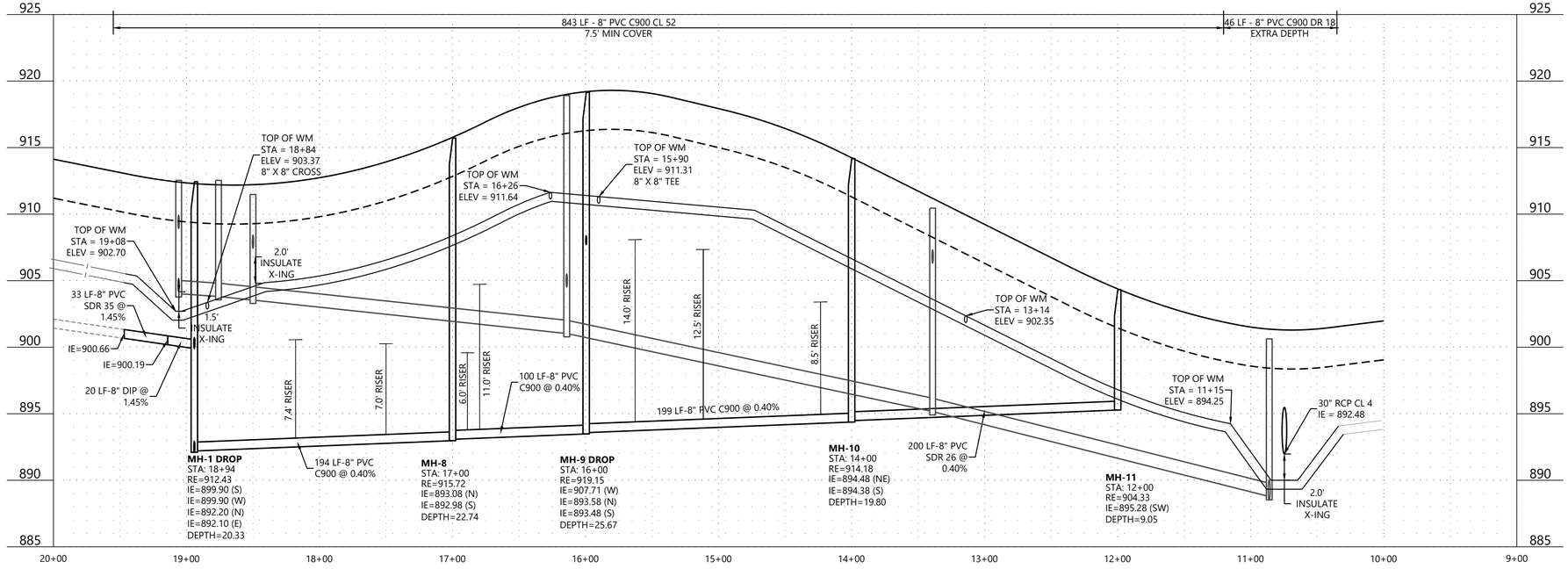

LEGEND

Call 48 Hours before digging:
811 or call811.com
Common Ground Alliance

XXX.X	SANITARY SEWER SERVICE INVERT ELEVATION @ EASEMENT LINE
WYE = X+XX X.X' RISER	SANITARY SEWER SERVICE WYE LOCATION ON MAIN LINE FROM DOWNSTREAM MANHOLE
XXX.X	DENOTES ELEVATION OF THE TOP OF WATER SERVICE STOP BOX
A	WATER SERVICE TO THIS LOT SHALL BE INSTALLED UNDER PROPOSED STORM SEWER & SHALL MAINTAIN A MINIMUM VERTICAL SEPARATION FROM STORM PIPE OF 1.5 FEET
B	SANITARY SEWER SERVICE TO THIS LOT SHALL BE INSTALLED UNDER PROPOSED STORM SEWER - INSTALL RISER AT PROPERTY LINE
C	WATER SERVICE OVER STORM SEWER (INSULATE)

GENERAL NOTES

FLAG HYDRANTS.

EXTEND RODS ON ALL VALVES PER CITY DETAIL WAT-1

ALL DROP MANHOLES TO BE LINED PER CITY DETAIL SAN-04

USE SCH 40 FOR ALL RISERS/LATERALS CONNECTING TO C-900 MAIN PER CITY DETAIL SER-3

1" POLY WATER SERVICE OR APPROVED EQUAL SEE CITY DETAIL SER-2

1" = 50'
0' 50' 100' 150'

CONSTRUCTION PLANS

RIVERTOWN HEIGHTS

N:\0027067.00\DWG\CIVIL\UTILITY\0027067S-UTF01.DWG

DESIGNED:	FDH II
CHECKED:	JHB
DRAWN:	CTY
HORIZONTAL SCALE:	50'
VERTICAL SCALE:	10' OR 5'

INITIAL ISSUE: 04/29/22
REVISIONS:
1 05/25/22 REVISED FOR CITY COMMENTS
2 . .
3 . .
4 . .
5 . .

PREPARED FOR:

DR HORTON, INC. - MINNESOTA

20860 KENBRIDGE COURT, SUITE 100
LAKEVILLE, MINNESOTA 55044

I HEREBY CERTIFY THAT THIS PLAN WAS PREPARED BY ME OR UNDER MY DIRECT SUPERVISION AND THAT I AM A DULY LICENSED PROFESSIONAL ENGINEER UNDER THE LAWS OF THE STATE OF MINNESOTA

JOHN H. BENDER
DATE: 05/25/22 LICENSE NO. 43358

RIVERTOWN HEIGHTS

CHASKA, MN

Westwood

Phone (952) 937-5150
Fax (952) 937-5822
Toll Free (888) 937-5150
12701 Whitewater Drive, Suite #300
Minnetonka, MN 55343
westwoodps.com

Westwood Professional Services, Inc.

SANITARY SEWER AND WATERMAIN CONSTRUCTION PLANS

PROJECT NUMBER: 0027067.00

SHEET NUMBER: 3 OF 22

DATE: 05/25/22

© 2022 Westwood Professional Services, Inc.

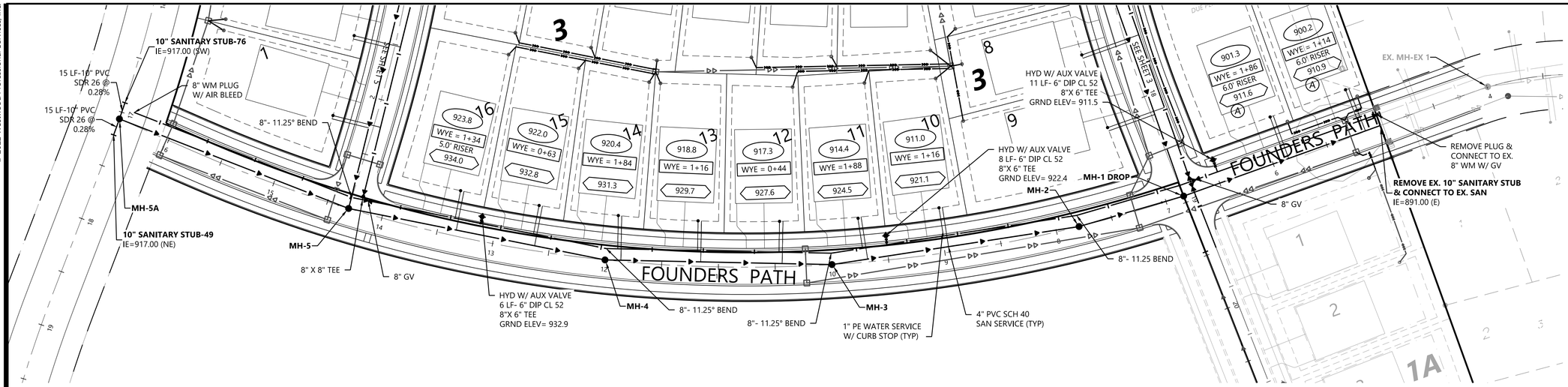

LEGEND

Call 48 Hours before digging:
811 or call811.com
Common Ground Alliance

XXX.X	SANITARY SEWER SERVICE INVERT ELEVATION @ EASEMENT LINE
WYE = X+XX X.X' RISER	SANITARY SEWER SERVICE WYE LOCATION ON MAIN LINE FROM DOWNSTREAM MANHOLE
XXX.X	DENOTES ELEVATION OF THE TOP OF WATER SERVICE STOP BOX
(A)	WATER SERVICE TO THIS LOT SHALL BE INSTALLED UNDER PROPOSED STORM SEWER & SHALL MAINTAIN A MINIMUM VERTICAL SEPARATION FROM STORM PIPE OF 1.5 FEET
(B)	SANITARY SEWER SERVICE TO THIS LOT SHALL BE INSTALLED UNDER PROPOSED STORM SEWER - INSTALL RISER AT PROPERTY LINE
(C)	WATER SERVICE OVER STORM SEWER (INSULATE)

GENERAL NOTES

FLAG HYDRANTS.

EXTEND RODS ON ALL VALVES PER CITY DETAIL WAT-1

ALL DROP MANHOLES TO BE LINED PER CITY DETAIL SAN-04

USE SCH 40 FOR ALL RISERS/LATERALS CONNECTING TO C-900 MAIN PER CITY DETAIL SER-3

1" POLY WATER SERVICE OR APPROVED EQUAL SEE CITY DETAIL SER-2

Street 2 - Founders Path

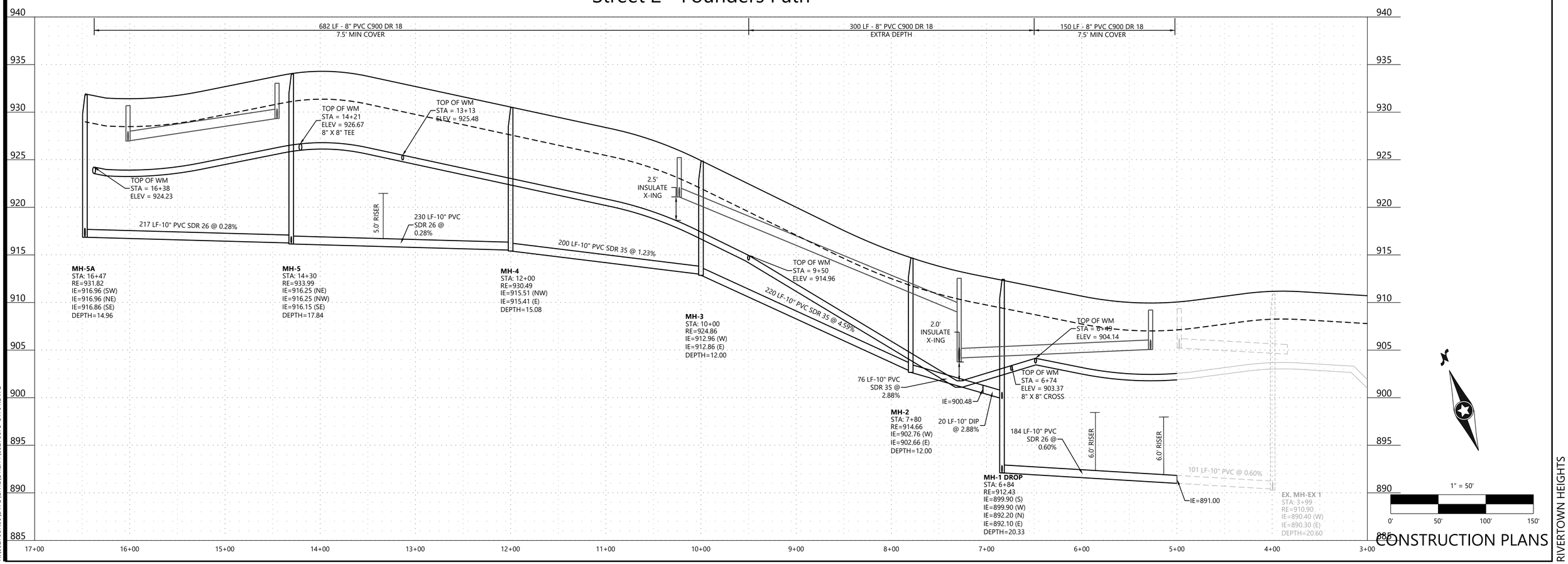

N:\0027067.00\DWG\CIVIL\UTILITY\0027067S-UTF01.DWG

CONSTRUCTION PLANS

RIVERTOWN HEIGHTS

DESIGNED:	FDH II
CHECKED:	JHB
DRAWN:	CTY
HORIZONTAL SCALE:	50'
VERTICAL SCALE:	10' OR 5'

INITIAL ISSUE: 04/29/22
REVISIONS:
1 05/25/22 REVISED FOR CITY COMMENTS
2 . .
3 . .
4 . .
5 . .

PREPARED FOR:

DR HORTON, INC. - MINNESOTA

20860 KENBRIDGE COURT, SUITE 100
LAKEVILLE, MINNESOTA 55044

I HEREBY CERTIFY THAT THIS PLAN WAS PREPARED BY ME OR UNDER MY DIRECT SUPERVISION AND THAT I AM A DULY LICENSED PROFESSIONAL ENGINEER UNDER THE LAWS OF THE STATE OF MINNESOTA

JOHN H. BENDER
DATE: 05/25/22 LICENSE NO. 43358

RIVERTOWN HEIGHTS

CHASKA, MN

Westwood

Phone (952) 937-5150 12701 Whitewater Drive, Suite #300
Fax (952) 937-5822 Minnetonka, MN 55343
Toll Free (888) 937-5150 westwoodps.com

Westwood Professional Services, Inc.

SANITARY SEWER AND WATERMAIN CONSTRUCTION PLANS

PROJECT NUMBER: 0027067.00

SHEET NUMBER: 4 OF 22

DATE: 05/25/22

© 2022 Westwood Professional Services, Inc.

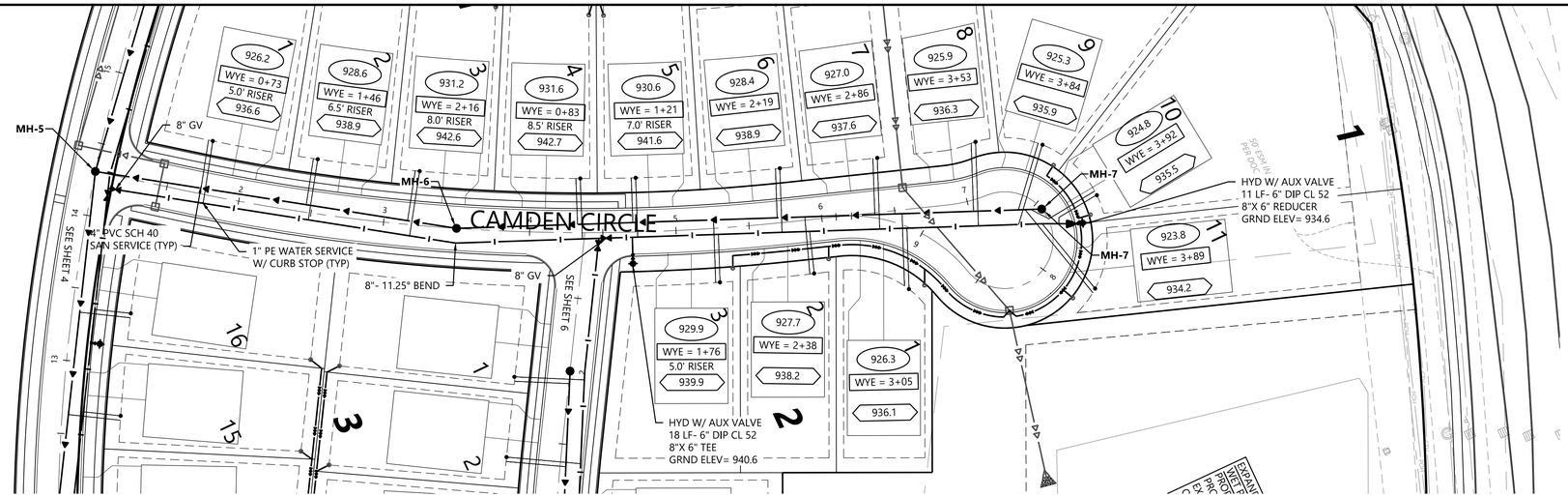

Street 4 - Camden Circle

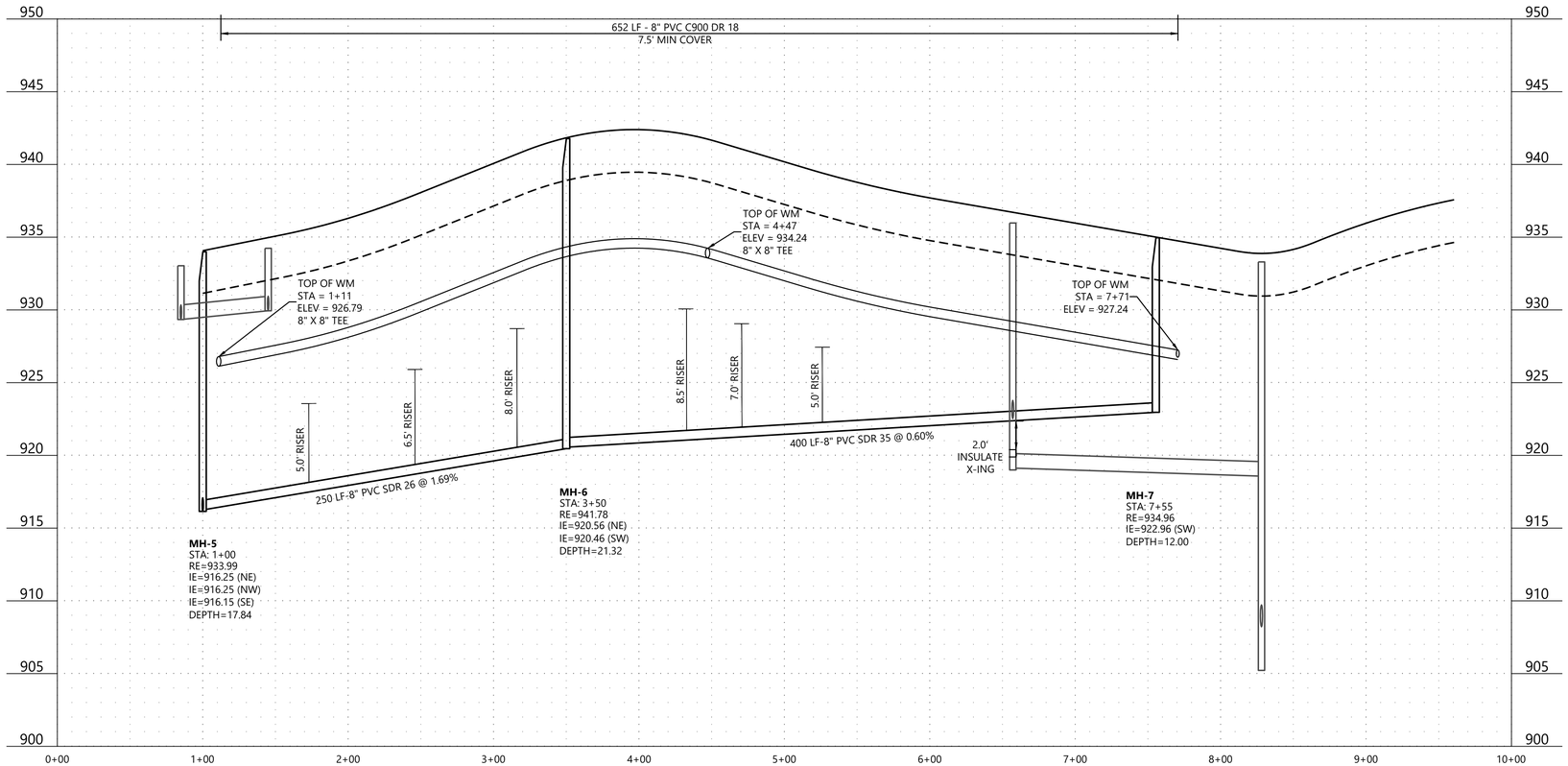

Call 48 Hours before digging:
811 or call811.com
Common Ground Alliance

LEGEND

XXX.X	SANITARY SEWER SERVICE INVERT ELEVATION @ EASEMENT LINE
WYE = X+XX X.X' RISER	SANITARY SEWER SERVICE WYE LOCATION ON MAIN LINE FROM DOWNSTREAM MANHOLE
XXX.X	DENOTES ELEVATION OF THE TOP OF WATER SERVICE STOP BOX
A	WATER SERVICE TO THIS LOT SHALL BE INSTALLED UNDER PROPOSED STORM SEWER & SHALL MAINTAIN A MINIMUM VERTICAL SEPARATION FROM STORM PIPE OF 1.5 FEET
B	SANITARY SEWER SERVICE TO THIS LOT SHALL BE INSTALLED UNDER PROPOSED STORM SEWER - INSTALL RISER AT PROPERTY LINE
C	WATER SERVICE OVER STORM SEWER (INSULATE)

GENERAL NOTES

FLAG HYDRANTS.

EXTEND RODS ON ALL VALVES PER CITY DETAIL WAT-1

ALL DROP MANHOLES TO BE LINED PER CITY DETAIL SAN-04

USE SCH 40 FOR ALL RISERS/LATERALS CONNECTING TO C-900 MAIN PER CITY DETAIL SER-3

1" POLY WATER SERVICE OR APPROVED EQUAL SEE CITY DETAIL SER-2

1" = 50'
0' 50' 100' 150'

CONSTRUCTION PLANS

RIVERTOWN HEIGHTS

N:\0027067.00\DWG\CIVIL\UTILITY\0027067S-UTF01.DWG

DESIGNED: FDH II
CHECKED: JHB
DRAWN: CTY
HORIZONTAL SCALE: 50'
VERTICAL SCALE: 10' OR 5'

INITIAL ISSUE: 04/29/22
REVISIONS:
1 05/25/22 REVISED FOR CITY COMMENTS
2 . .
3 . .
4 . .
5 . .

PREPARED FOR:

DR HORTON, INC. - MINNESOTA

20860 KENBRIDGE COURT, SUITE 100
LAKEVILLE, MINNESOTA 55044

I HEREBY CERTIFY THAT THIS PLAN WAS PREPARED BY ME OR UNDER MY DIRECT SUPERVISION AND THAT I AM A DULY LICENSED PROFESSIONAL ENGINEER UNDER THE LAWS OF THE STATE OF MINNESOTA

JOHN H. BENDER
DATE: 05/25/22 LICENSE NO. 43358

RIVERTOWN HEIGHTS

CHASKA, MN

Westwood

Phone (952) 937-5150 12701 Whitewater Drive, Suite #300
Fax (952) 937-5822 Minnetonka, MN 55343
Toll Free (888) 937-5150 westwoodps.com

Westwood Professional Services, Inc.

SANITARY SEWER AND WATERMAIN CONSTRUCTION PLANS

PROJECT NUMBER: 0027067.00

SHEET NUMBER: 5 OF 22

DATE: 05/25/22

© 2022 Westwood Professional Services, Inc.

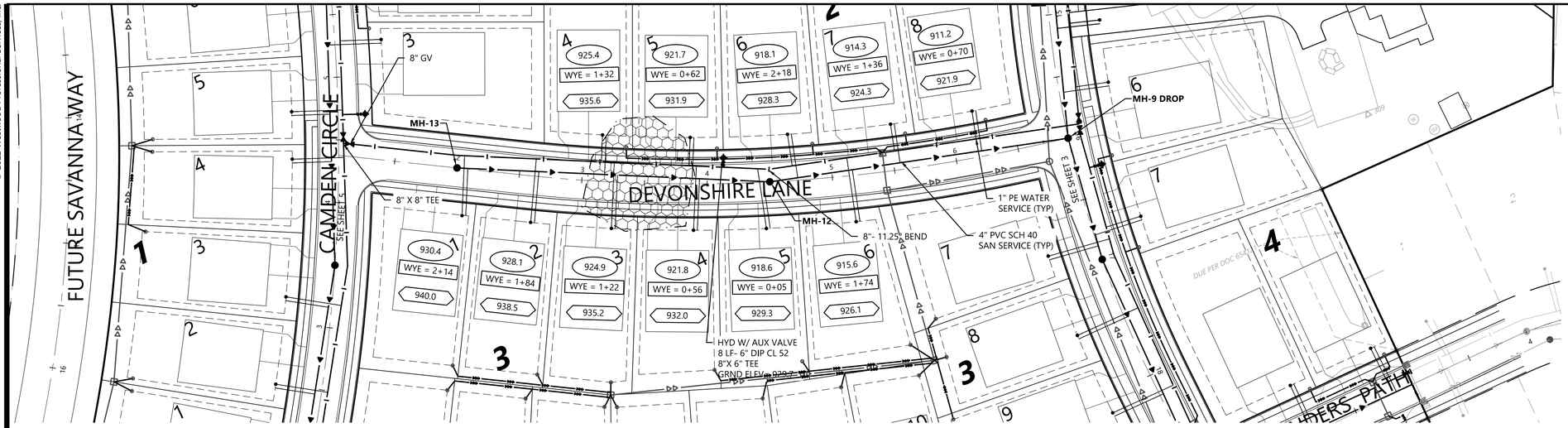

Street 5 - Devonshire Lane

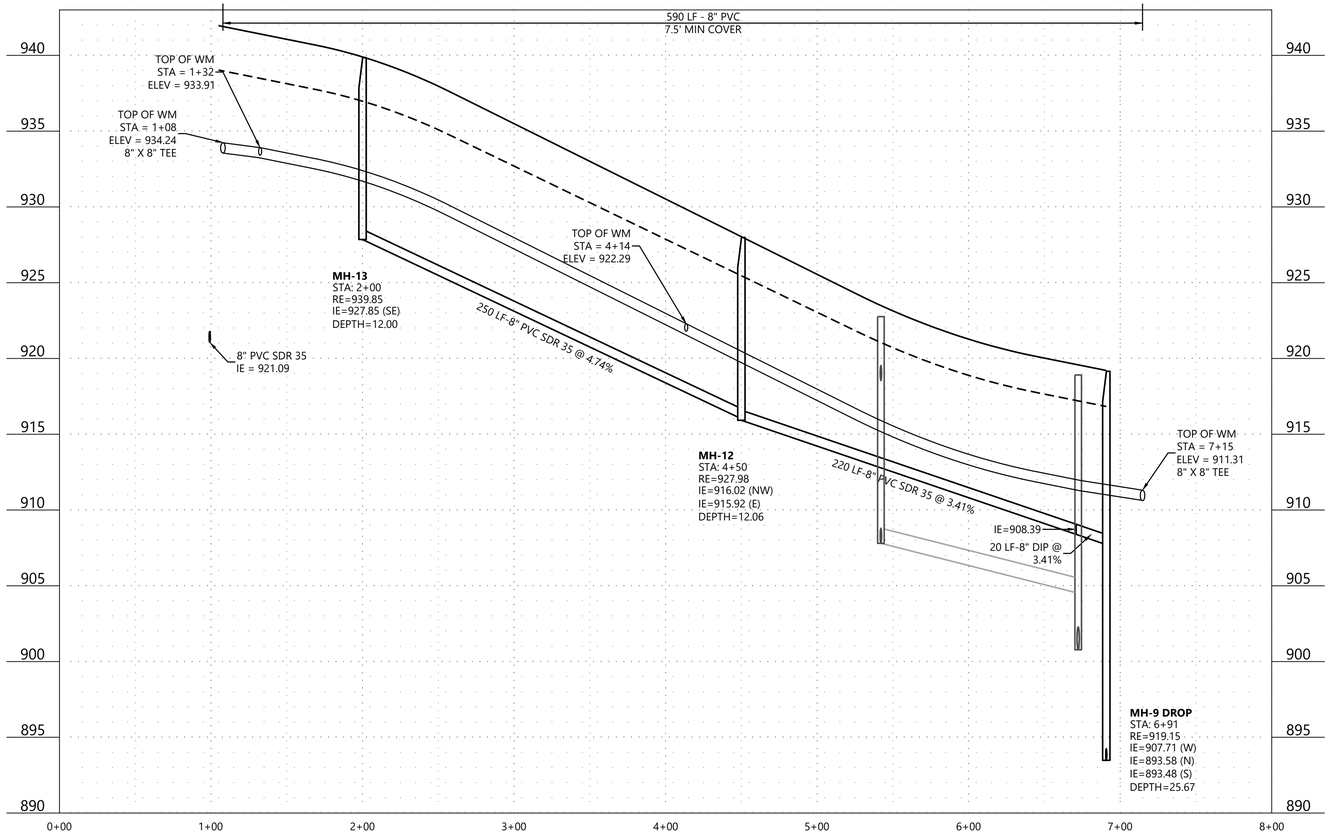

Call 48 Hours before digging:
811 or call811.com
Common Ground Alliance

LEGEND

XXX.X	SANITARY SEWER SERVICE INVERT ELEVATION @ EASEMENT LINE
WYE = X+XX X.X' RISER	SANITARY SEWER SERVICE WYE LOCATION ON MAIN LINE FROM DOWNSTREAM MANHOLE
XXX.X	DENOTES ELEVATION OF THE TOP OF WATER SERVICE STOP BOX
A	WATER SERVICE TO THIS LOT SHALL BE INSTALLED UNDER PROPOSED STORM SEWER & SHALL MAINTAIN A MINIMUM VERTICAL SEPARATION FROM STORM PIPE OF 1.5 FEET
B	SANITARY SEWER SERVICE TO THIS LOT SHALL BE INSTALLED UNDER PROPOSED STORM SEWER - INSTALL RISER AT PROPERTY LINE
C	WATER SERVICE OVER STORM SEWER (INSULATE)

GENERAL NOTES

FLAG HYDRANTS.

EXTEND RODS ON ALL VALVES PER CITY DETAIL WAT-1

ALL DROP MANHOLES TO BE LINED PER CITY DETAIL SAN-04

USE SCH 40 FOR ALL RISERS/LATERALS CONNECTING TO C-900 MAIN PER CITY DETAIL SER-3

1" POLY WATER SERVICE OR APPROVED EQUAL SEE CITY DETAIL SER-2

1" = 50'
0' 50' 100' 150'

CONSTRUCTION PLANS

RIVERTOWN HEIGHTS

N:\0027067.00\DWG\CIVIL\UTILITY\0027067S-UTF01.DWG

DESIGNED:	FDH II
CHECKED:	JHB
DRAWN:	CTY
HORIZONTAL SCALE:	50'
VERTICAL SCALE:	10' OR 5'

INITIAL ISSUE: 04/29/22
REVISIONS:
1 05/25/22 REVISED FOR CITY COMMENTS
2 . .
3 . .
4 . .
5 . .

PREPARED FOR:

DR HORTON, INC. - MINNESOTA

20860 KENBRIDGE COURT, SUITE 100
LAKEVILLE, MINNESOTA 55044

I HEREBY CERTIFY THAT THIS PLAN WAS PREPARED BY ME OR UNDER MY DIRECT SUPERVISION AND THAT I AM A DULY LICENSED PROFESSIONAL ENGINEER UNDER THE LAWS OF THE STATE OF MINNESOTA

JOHN H. BENDER
DATE: 05/25/22 LICENSE NO. 43358

RIVERTOWN HEIGHTS

CHASKA, MN

Westwood

Phone (952) 937-5150
Fax (952) 937-5822
Toll Free (888) 937-5150
12701 Whitewater Drive, Suite #300
Minnetonka, MN 55343
westwoodps.com

Westwood Professional Services, Inc.

SANITARY SEWER AND WATERMAIN CONSTRUCTION PLANS

PROJECT NUMBER: 0027067.00

SHEET NUMBER: 6 OF 22

DATE: 05/25/22

© 2022 Westwood Professional Services, Inc.

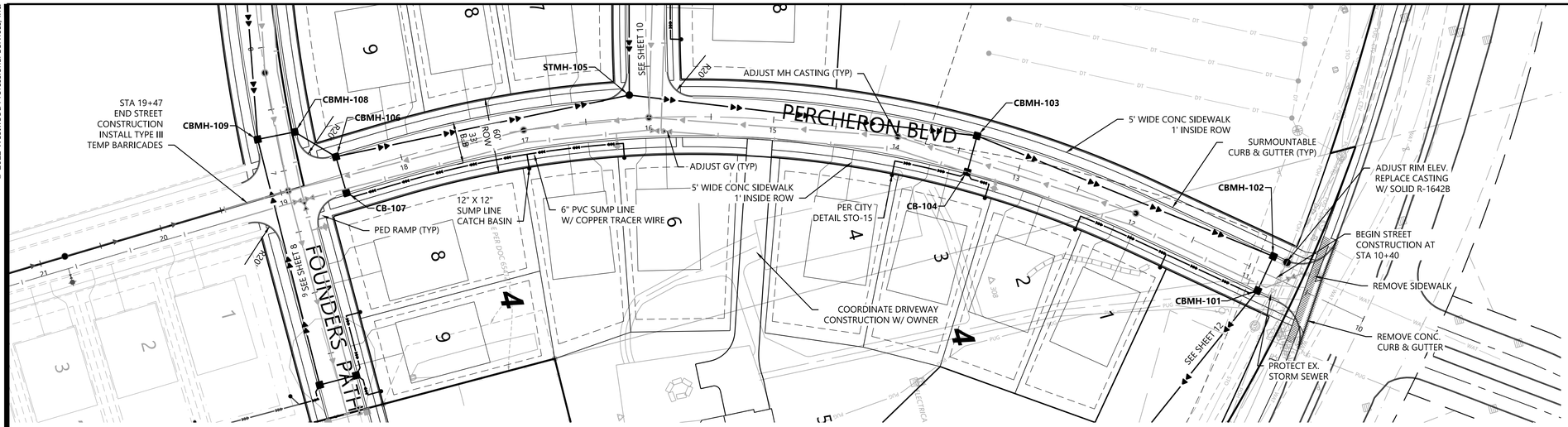

Street 1 - Percheron Blvd

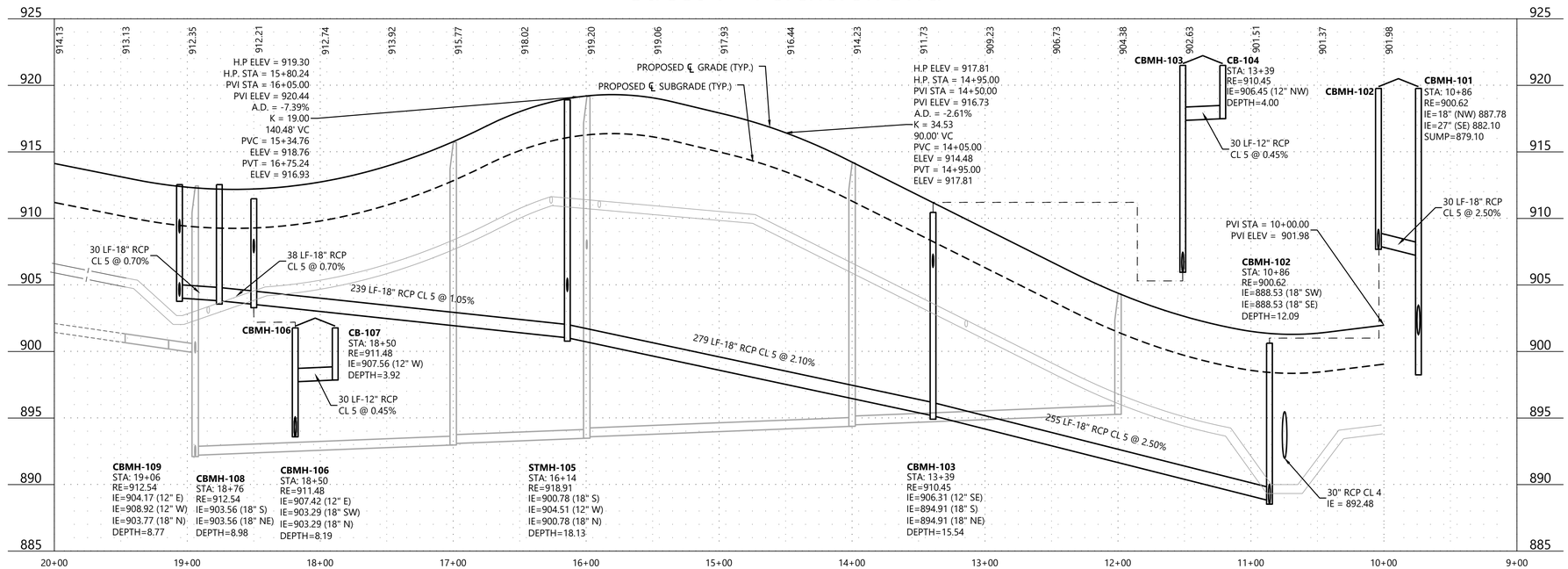

Call 48 Hours before digging:
811 or call811.com
Common Ground Alliance

LEGEND

EXISTING	PROPOSED	
900.00	× 900.00	GUTTER ELEVATION

GENERAL NOTES

1. RADIUS TO BE B618 CURB & GUTTER WITH 10' TRANSITIONS FROM SURMOUNTABLE CURB & GUTTER.
2. ALL RCP SHALL BE CLASS V, UNLESS OTHERWISE NOTED.
3. ALL CATCH BASIN CASTINGS IN CURB SHALL BE SUMPED 0.15 FEET. MANHOLE CASTINGS IN PAVED AREAS SHALL BE SUMPED 0.05 FEET. RIM ELEVATIONS SHOWN ON THE PROFILES REFLECT THE SUMPED ELEVATIONS.

1" = 50'
0' 50' 100' 150'

CONSTRUCTION PLANS

RIVERTOWN HEIGHTS

N:\0027067.00\DWG\CIVIL\UTILITY\0027067S-STF.DWG

DESIGNED:	FDH II
CHECKED:	JHB
DRAWN:	CTY
HORIZONTAL SCALE:	50'
VERTICAL SCALE:	10' OR 5'

INITIAL ISSUE: 04/29/22
REVISIONS:
1 05/25/22 REVISED FOR CITY COMMENTS
2 . .
3 . .
4 . .
5 . .

PREPARED FOR:

DR HORTON, INC. - MINNESOTA
20860 KENBRIDGE COURT, SUITE 100
LAKEVILLE, MINNESOTA 55044

I HEREBY CERTIFY THAT THIS PLAN WAS PREPARED BY ME OR UNDER MY DIRECT SUPERVISION AND THAT I AM A DULY LICENSED PROFESSIONAL ENGINEER UNDER THE LAWS OF THE STATE OF MINNESOTA
JOHN H. BENDER
DATE: 05/25/22 LICENSE NO. 43358

RIVERTOWN HEIGHTS
CHASKA, MN

Westwood
Phone (952) 937-5150 12701 Whitewater Drive, Suite #300
Fax (952) 937-5822 Minnetonka, MN 55343
Toll Free (888) 937-5150 westwoodps.com
Westwood Professional Services, Inc.

STREET AND STORM SEWER CONSTRUCTION PLANS
PROJECT NUMBER: 0027067.00

SHEET NUMBER: 7 OF 22
DATE: 05/25/22

© 2022 Westwood Professional Services, Inc.

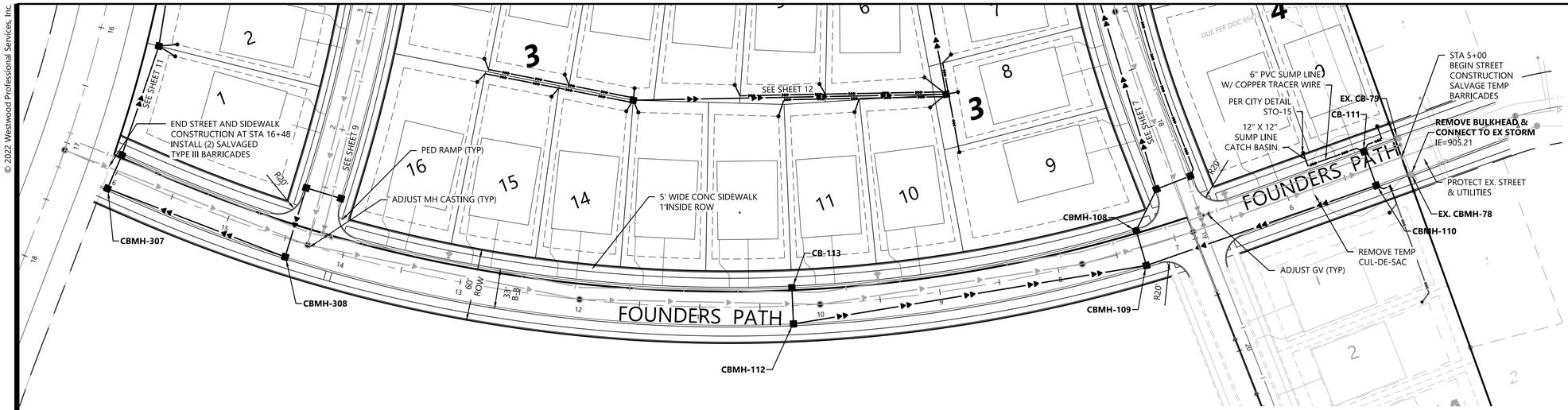

Call 48 Hours before digging:
811 or call811.com
Common Ground Alliance

LEGEND

EXISTING	PROPOSED	
900.00	× 900.00	GUTTER ELEVATION

GENERAL NOTES

1. RADIUS TO BE B618 CURB & GUTTER WITH 10' TRANSITIONS FROM SURMOUNTABLE CURB & GUTTER.
2. ALL RCP SHALL BE CLASS V, UNLESS OTHERWISE NOTED.
3. ALL CATCH BASIN CASTINGS IN CURB SHALL BE SUMPED 0.15 FEET. MANHOLE CASTINGS IN PAVED AREAS SHALL BE SUMPED 0.05 FEET. RIM ELEVATIONS SHOWN ON THE PROFILES REFLECT THE SUMPED ELEVATIONS.

Street 2 - Founders Path

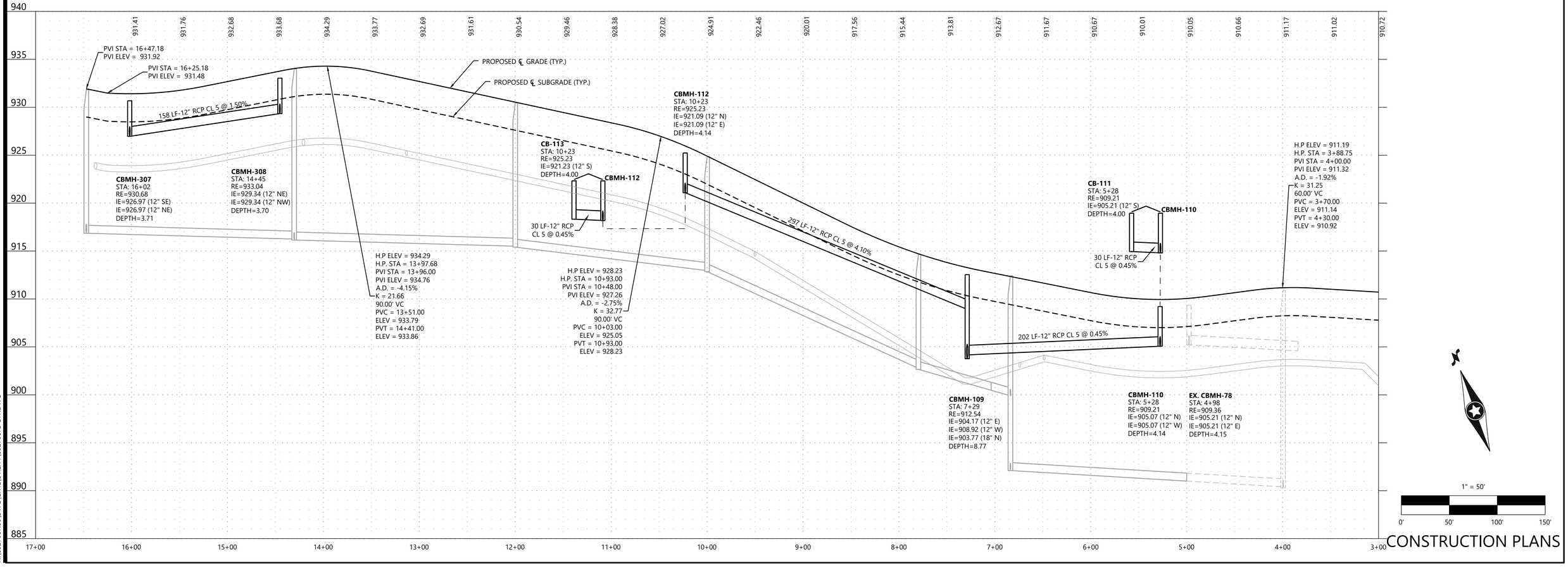

1" = 50'
0' 50' 100' 150'

CONSTRUCTION PLANS

RIVERTOWN HEIGHTS

N:\0027067.00\DWG\CIVIL\UTILITY\0027067S-STF.DWG

DESIGNED:	FDH II
CHECKED:	JHB
DRAWN:	CTY
HORIZONTAL SCALE:	50'
VERTICAL SCALE:	10' OR 5'

INITIAL ISSUE: 04/29/22
REVISIONS:
1 05/25/22 REVISED FOR CITY COMMENTS
2 . .
3 . .
4 . .
5 . .

PREPARED FOR:

DR HORTON, INC. - MINNESOTA
20860 KENBRIDGE COURT, SUITE 100
LAKEVILLE, MINNESOTA 55044

I HEREBY CERTIFY THAT THIS PLAN WAS PREPARED BY ME OR UNDER MY DIRECT SUPERVISION AND THAT I AM A DULY LICENSED PROFESSIONAL ENGINEER UNDER THE LAWS OF THE STATE OF MINNESOTA
JOHN H. BENDER
DATE: 05/25/22 LICENSE NO. 43358

RIVERTOWN HEIGHTS
CHASKA, MN

Westwood
Phone (952) 937-5150 12701 Whitewater Drive, Suite #300
Fax (952) 937-5822 Minnetonka, MN 55343
Toll Free (888) 937-5150 westwoodps.com
Westwood Professional Services, Inc.

STREET AND STORM SEWER CONSTRUCTION PLANS
PROJECT NUMBER: 0027067.00

SHEET NUMBER: 8 OF 22
DATE: 05/25/22

© 2022 Westwood Professional Services, Inc.

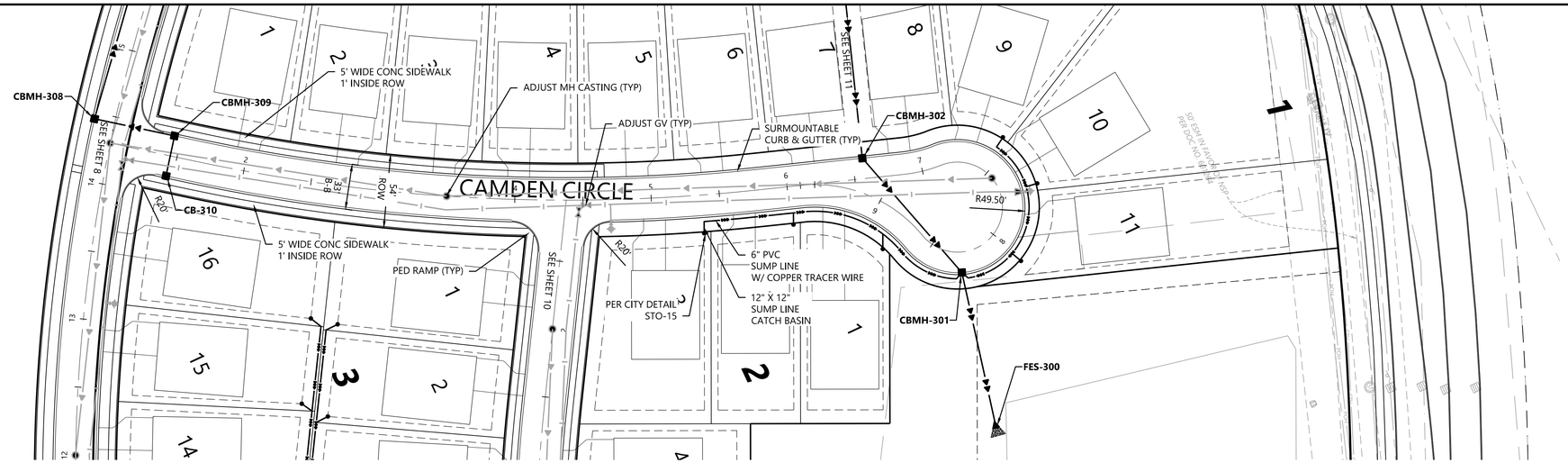

Street 4 - Camden Circle

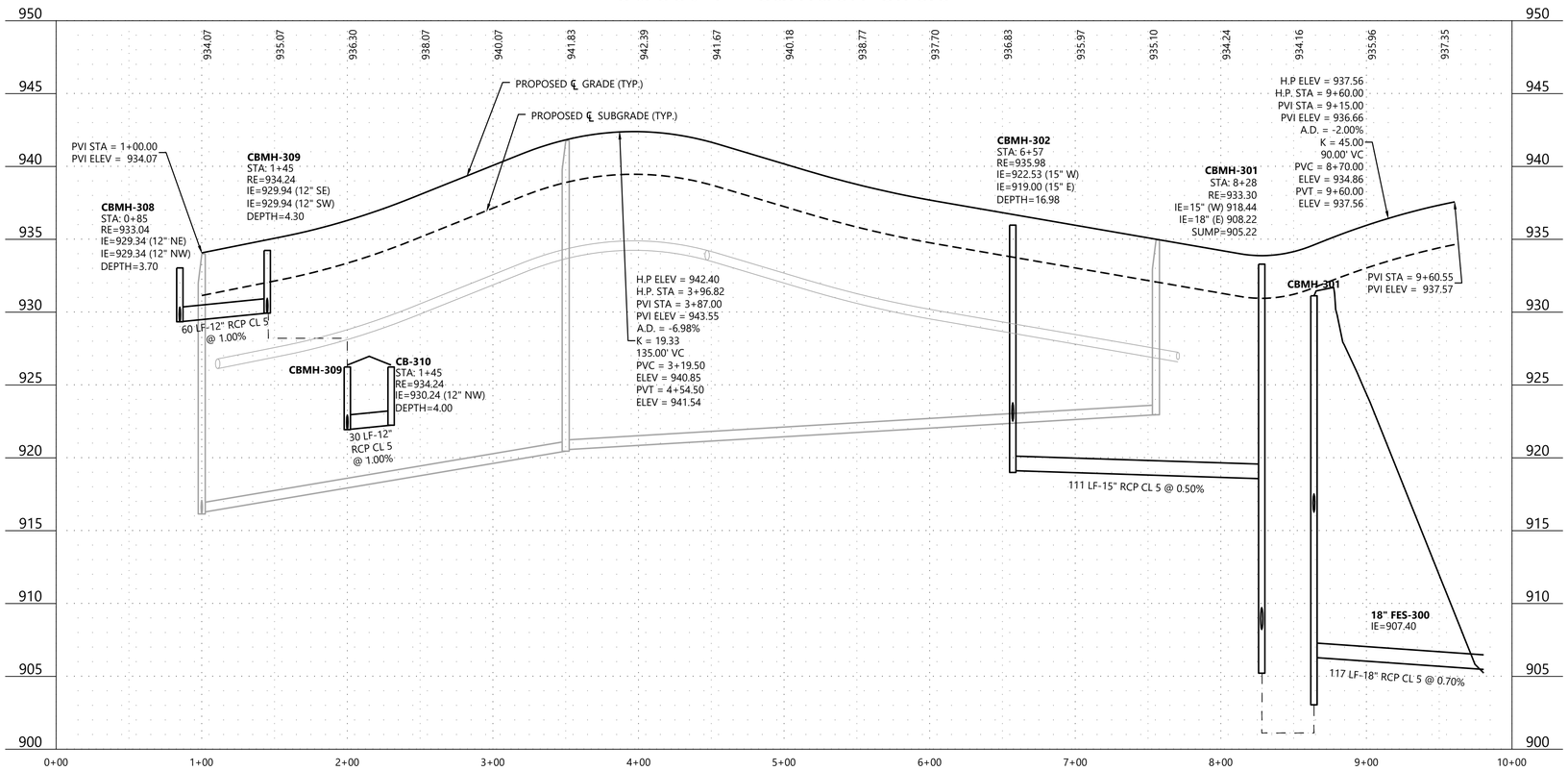

Call 48 Hours before digging:
811 or call811.com
Common Ground Alliance

LEGEND

EXISTING	PROPOSED	
900.00	× 900.00	GUTTER ELEVATION

GENERAL NOTES

1. RADIUS TO BE B618 CURB & GUTTER WITH 10' TRANSITIONS FROM SURMOUNTABLE CURB & GUTTER.
2. ALL RCP SHALL BE CLASS V, UNLESS OTHERWISE NOTED.
3. ALL CATCH BASIN CASTINGS IN CURB SHALL BE SUMPED 0.15 FEET. MANHOLE CASTINGS IN PAVED AREAS SHALL BE SUMPED 0.05 FEET. RIM ELEVATIONS SHOWN ON THE PROFILES REFLECT THE SUMPED ELEVATIONS.



1" = 50'
0' 50' 100' 150'

CONSTRUCTION PLANS

RIVERTOWN HEIGHTS

N:\0027067.00\DWG\CIVIL\UTILITY\0027067S-STF.DWG

DESIGNED: FDH II
CHECKED: JHB
DRAWN: CTY
HORIZONTAL SCALE: 50'
VERTICAL SCALE: 10' OR 5'

INITIAL ISSUE: 04/29/22
REVISIONS:
1 05/25/22 REVISED FOR CITY COMMENTS
2 . .
3 . .
4 . .

PREPARED FOR:

DR HORTON, INC. - MINNESOTA
20860 KENBRIDGE COURT, SUITE 100
LAKEVILLE, MINNESOTA 55044

I HEREBY CERTIFY THAT THIS PLAN WAS PREPARED BY ME OR UNDER MY DIRECT SUPERVISION AND THAT I AM A DULY LICENSED PROFESSIONAL ENGINEER UNDER THE LAWS OF THE STATE OF MINNESOTA
JOHN H. BENDER
DATE: 05/25/22 LICENSE NO. 43358

RIVERTOWN HEIGHTS
CHASKA, MN

Westwood
Phone (952) 937-5150 12701 Whitewater Drive, Suite #300
Fax (952) 937-5822 Minnetonka, MN 55343
Toll Free (888) 937-5150 westwoodps.com
Westwood Professional Services, Inc.

STREET AND STORM SEWER CONSTRUCTION PLANS
PROJECT NUMBER: 0027067.00

SHEET NUMBER: 9 OF 22
DATE: 05/25/22

© 2022 Westwood Professional Services, Inc.

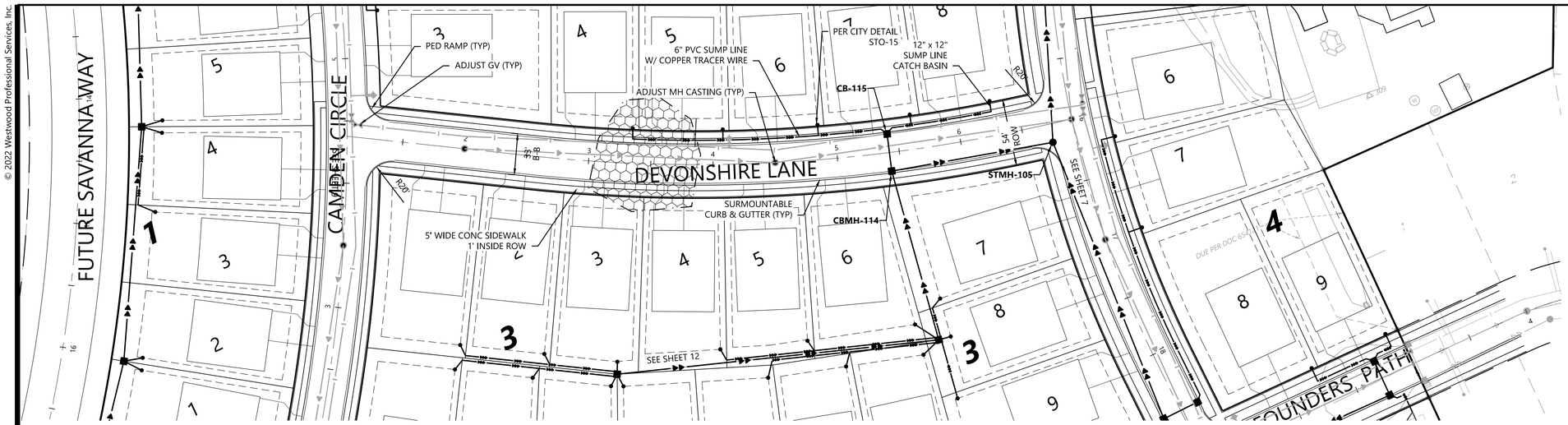

Street 5 - Devonshire Lane

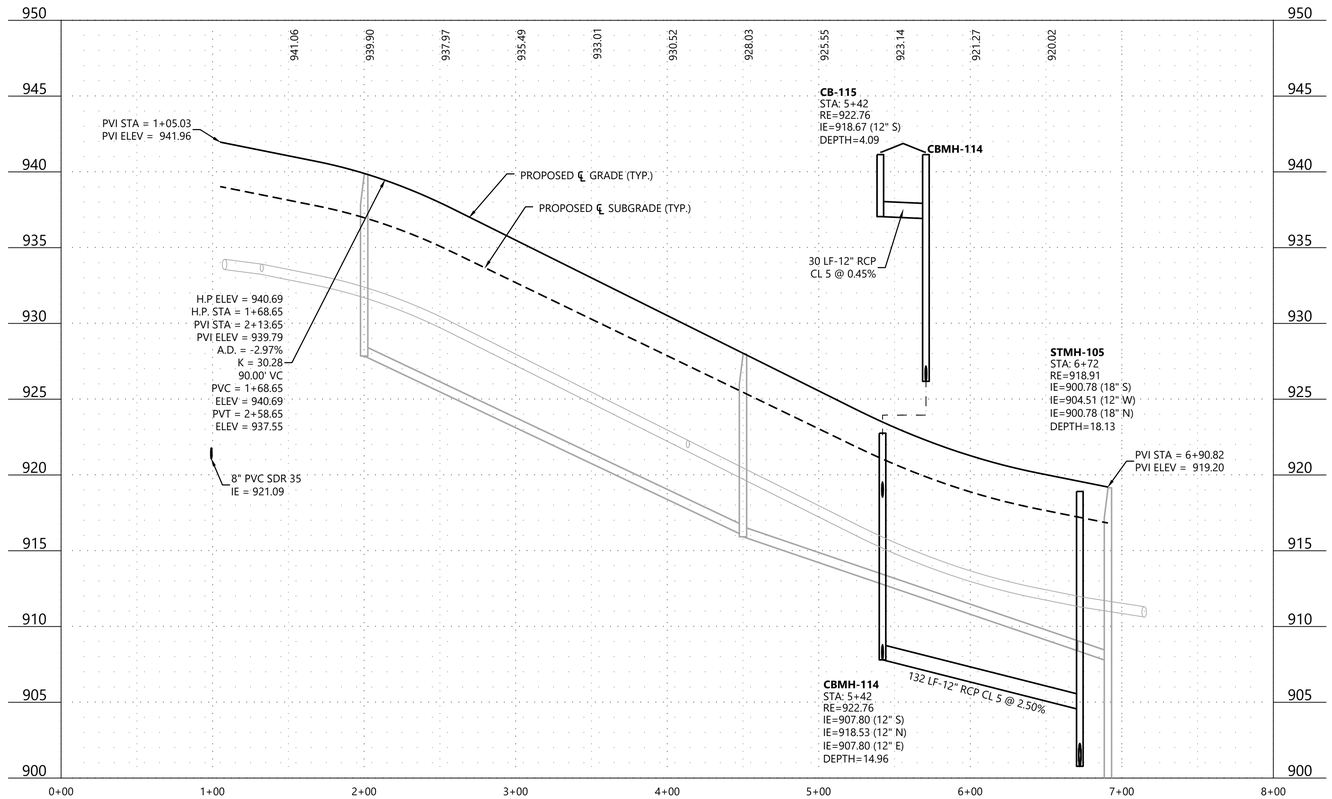

Call 48 Hours before digging:
811 or call811.com
Common Ground Alliance

LEGEND

EXISTING	PROPOSED	
× 900.00	× 900.00	GUTTER ELEVATION

GENERAL NOTES

1. RADIUS TO BE B618 CURB & GUTTER WITH 10' TRANSITIONS FROM SURMOUNTABLE CURB & GUTTER.
2. ALL RCP SHALL BE CLASS V, UNLESS OTHERWISE NOTED.
3. ALL CATCH BASIN CASTINGS IN CURB SHALL BE SUMPED 0.15 FEET. MANHOLE CASTINGS IN PAVED AREAS SHALL BE SUMPED 0.05 FEET. RIM ELEVATIONS SHOWN ON THE PROFILES REFLECT THE SUMPED ELEVATIONS.

1" = 50'
0' 50' 100' 150'

CONSTRUCTION PLANS

RIVERTOWN HEIGHTS

N:\0027067.00\DWG\CIVIL\UTILITY\0027067S-STF.DWG

DESIGNED:	FDH II
CHECKED:	JHB
DRAWN:	CTY
HORIZONTAL SCALE:	50'
VERTICAL SCALE:	10' OR 5'

INITIAL ISSUE: 04/29/22
REVISIONS:
1 05/25/22 REVISED FOR CITY COMMENTS
2 . .
3 . .
4 . .
5 . .

PREPARED FOR:

DR HORTON, INC. - MINNESOTA

20860 KENBRIDGE COURT, SUITE 100
LAKEVILLE, MINNESOTA 55044

I HEREBY CERTIFY THAT THIS PLAN WAS PREPARED BY ME OR UNDER MY DIRECT SUPERVISION AND THAT I AM A DULY LICENSED PROFESSIONAL ENGINEER UNDER THE LAWS OF THE STATE OF MINNESOTA

JOHN H. BENDER
DATE: 05/25/22 LICENSE NO. 43358

RIVERTOWN HEIGHTS

CHASKA, MN

Westwood

Phone (952) 937-5150 12701 Whitewater Drive, Suite #300
Fax (952) 937-5822 Minnetonka, MN 55343
Toll Free (888) 937-5150 westwoodps.com

Westwood Professional Services, Inc.

STREET AND STORM SEWER CONSTRUCTION PLANS

PROJECT NUMBER: 0027067.00

SHEET NUMBER: 10 OF 22

DATE: 05/25/22

© 2022 Westwood Professional Services, Inc.

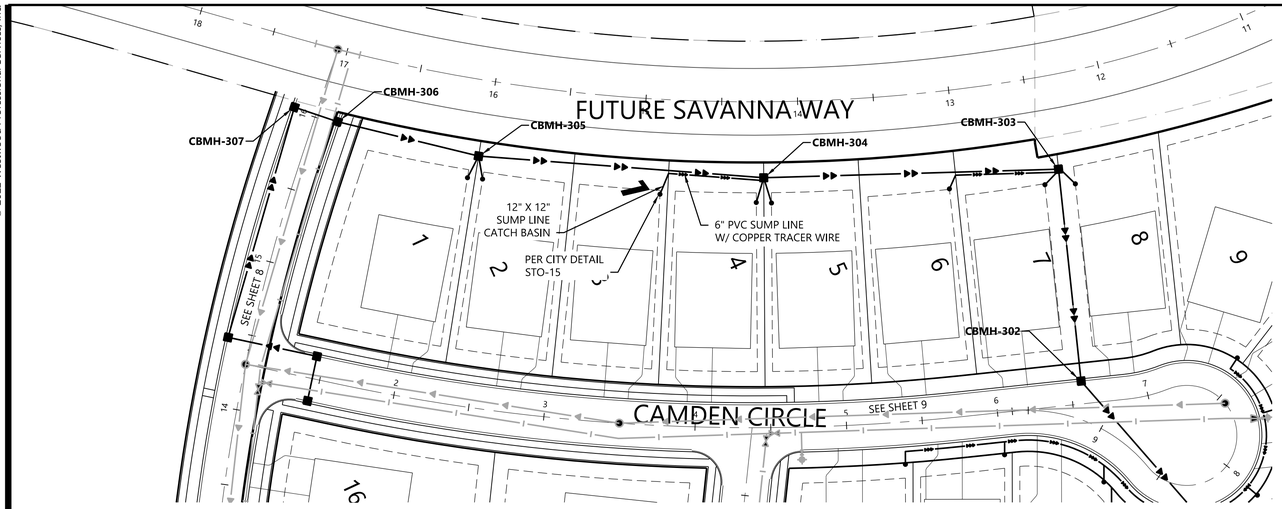

CBMH 307-302

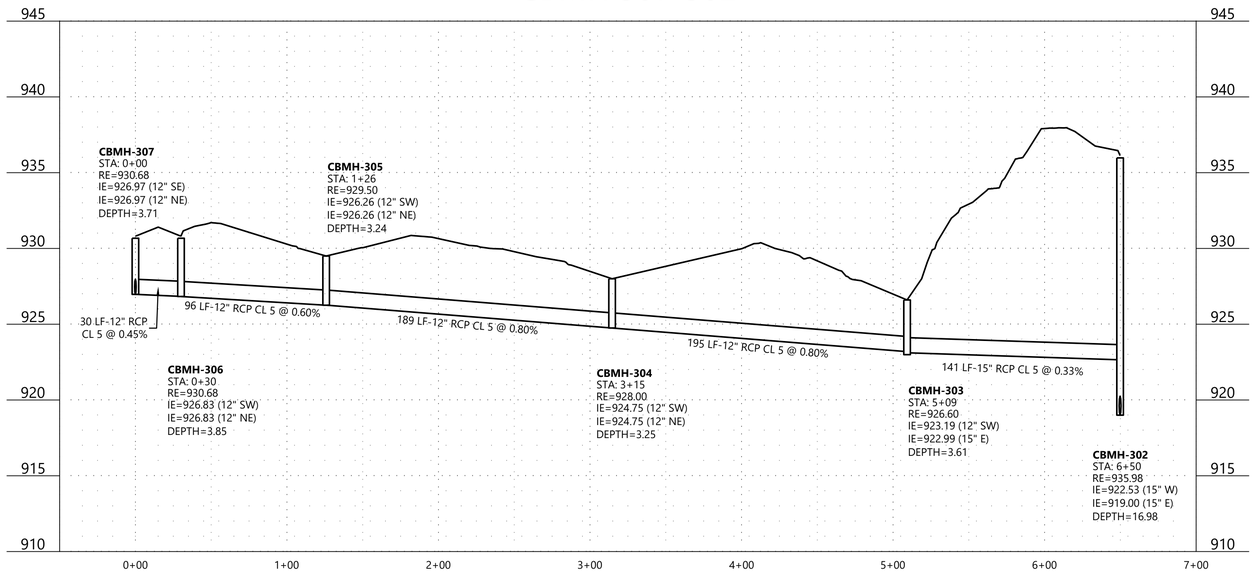

Call 48 Hours before digging:
811 or call811.com
Common Ground Alliance

LEGEND

EXISTING	PROPOSED	
900.00	× 900.00	GUTTER ELEVATION

GENERAL NOTES

1. RADIUS TO BE B618 CURB & GUTTER WITH 10' TRANSITIONS FROM SURMOUNTABLE CURB & GUTTER.
2. ALL RCP SHALL BE CLASS V, UNLESS OTHERWISE NOTED.
3. ALL CATCH BASIN CASTINGS IN CURB SHALL BE SUMPED 0.15 FEET. MANHOLE CASTINGS IN PAVED AREAS SHALL BE SUMPED 0.05 FEET. RIM ELEVATIONS SHOWN ON THE PROFILES REFLECT THE SUMPED ELEVATIONS.

1" = 50'
0' 50' 100' 150'

CONSTRUCTION PLANS

RIVERTOWN HEIGHTS

N:\0027067.00\DWG\CIVIL\UTILITY\0027067S_STF.DWG

DESIGNED:	FDH II
CHECKED:	JHB
DRAWN:	CTY
HORIZONTAL SCALE:	50'
VERTICAL SCALE:	10' OR 5'

INITIAL ISSUE: 04/29/22
REVISIONS:
1 05/25/22 REVISED FOR CITY COMMENTS
2 . .
3 . .
4 . .
5 . .

PREPARED FOR:
DR HORTON, INC. - MINNESOTA
20860 KENBRIDGE COURT, SUITE 100
LAKEVILLE, MINNESOTA 55044

I HEREBY CERTIFY THAT THIS PLAN WAS PREPARED BY ME OR UNDER MY DIRECT SUPERVISION AND THAT I AM A DULY LICENSED PROFESSIONAL ENGINEER UNDER THE LAWS OF THE STATE OF MINNESOTA
JOHN H. BENDER
DATE: 05/25/22 LICENSE NO. 43358

RIVERTOWN HEIGHTS
CHASKA, MN

Westwood
Phone (952) 937-5150 12701 Whitewater Drive, Suite #300
Fax (952) 937-5822 Minnetonka, MN 55343
Toll Free (888) 937-5150 westwoodps.com
Westwood Professional Services, Inc.

STREET AND STORM SEWER CONSTRUCTION PLANS
PROJECT NUMBER: 0027067.00

SHEET NUMBER: 11 OF 22
DATE: 05/25/22

© 2022 Westwood Professional Services, Inc.

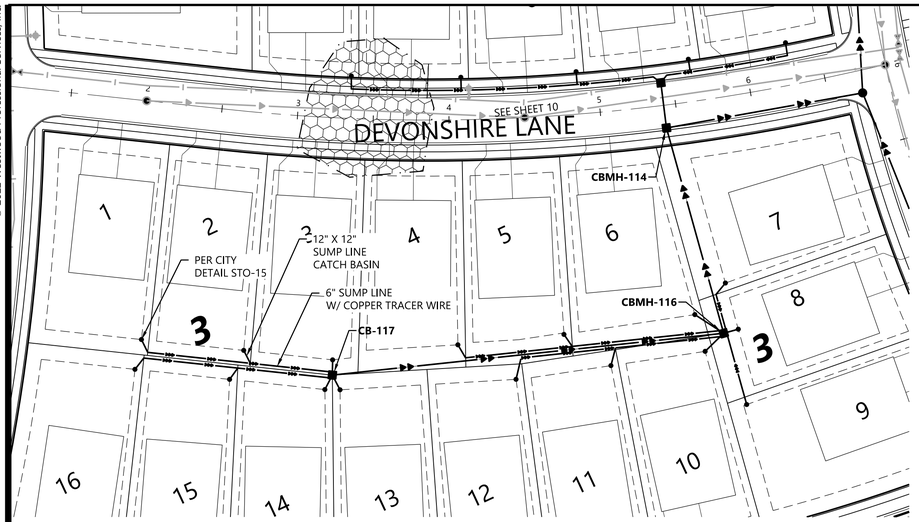

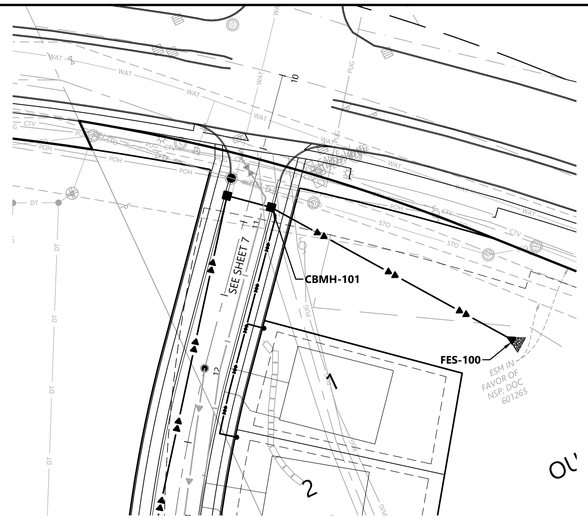

Call 48 Hours before digging:
811 or call811.com
Common Ground Alliance

LEGEND

EXISTING	PROPOSED	
900.00	× 900.00	GUTTER ELEVATION

GENERAL NOTES

1. RADIUS TO BE B618 CURB & GUTTER WITH 10' TRANSITIONS FROM SURMOUNTABLE CURB & GUTTER.
2. ALL RCP SHALL BE CLASS V, UNLESS OTHERWISE NOTED.
3. ALL CATCH BASIN CASTINGS IN CURB SHALL BE SUMPED 0.15 FEET. MANHOLE CASTINGS IN PAVED AREAS SHALL BE SUMPED 0.05 FEET. RIM ELEVATIONS SHOWN ON THE PROFILES REFLECT THE SUMPED ELEVATIONS.

117-114

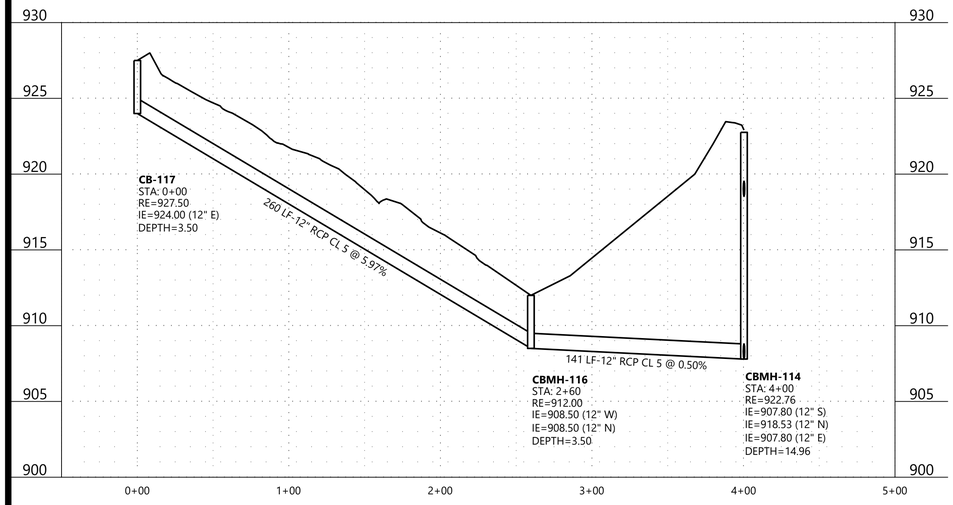

101-100

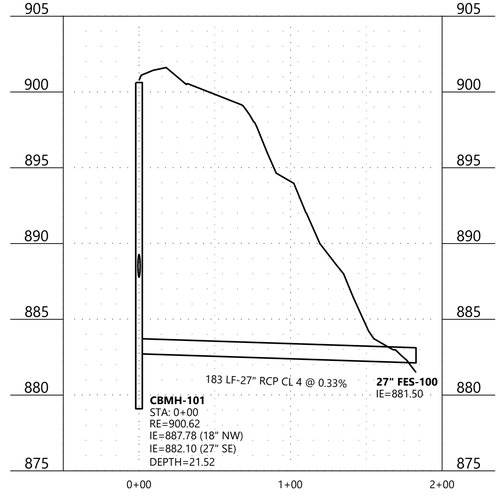



1" = 50'
0' 50' 100' 150'

CONSTRUCTION PLANS

RIVERTOWN HEIGHTS

N:\0027067.00\DWG\CIVIL\UTILITY\0027067S-STF.DWG

DESIGNED:	FDH II
CHECKED:	JHB
DRAWN:	CTY
HORIZONTAL SCALE:	50'
VERTICAL SCALE:	10' OR 5'

INITIAL ISSUE: 04/29/22
REVISIONS:
1 05/25/22 REVISED FOR CITY COMMENTS
2 . .
3 . .
4 . .
5 . .

PREPARED FOR:

DR HORTON, INC. - MINNESOTA
20860 KENBRIDGE COURT, SUITE 100
LAKEVILLE, MINNESOTA 55044

I HEREBY CERTIFY THAT THIS PLAN WAS PREPARED BY ME OR UNDER MY DIRECT SUPERVISION AND THAT I AM A DULY LICENSED PROFESSIONAL ENGINEER UNDER THE LAWS OF THE STATE OF MINNESOTA
JOHN H. BENDER
DATE: 05/25/22 LICENSE NO. 43358

RIVERTOWN HEIGHTS
CHASKA, MN

Westwood
Phone (952) 937-5150 12701 Whitewater Drive, Suite #300
Fax (952) 937-5822 Minnetonka, MN 55343
Toll Free (888) 937-5150 westwoodps.com
Westwood Professional Services, Inc.

STREET AND STORM SEWER CONSTRUCTION PLANS
PROJECT NUMBER: 0027067.00

SHEET NUMBER: 12 OF 22
DATE: 05/25/22

© 2022 Westwood Professional Services, Inc.

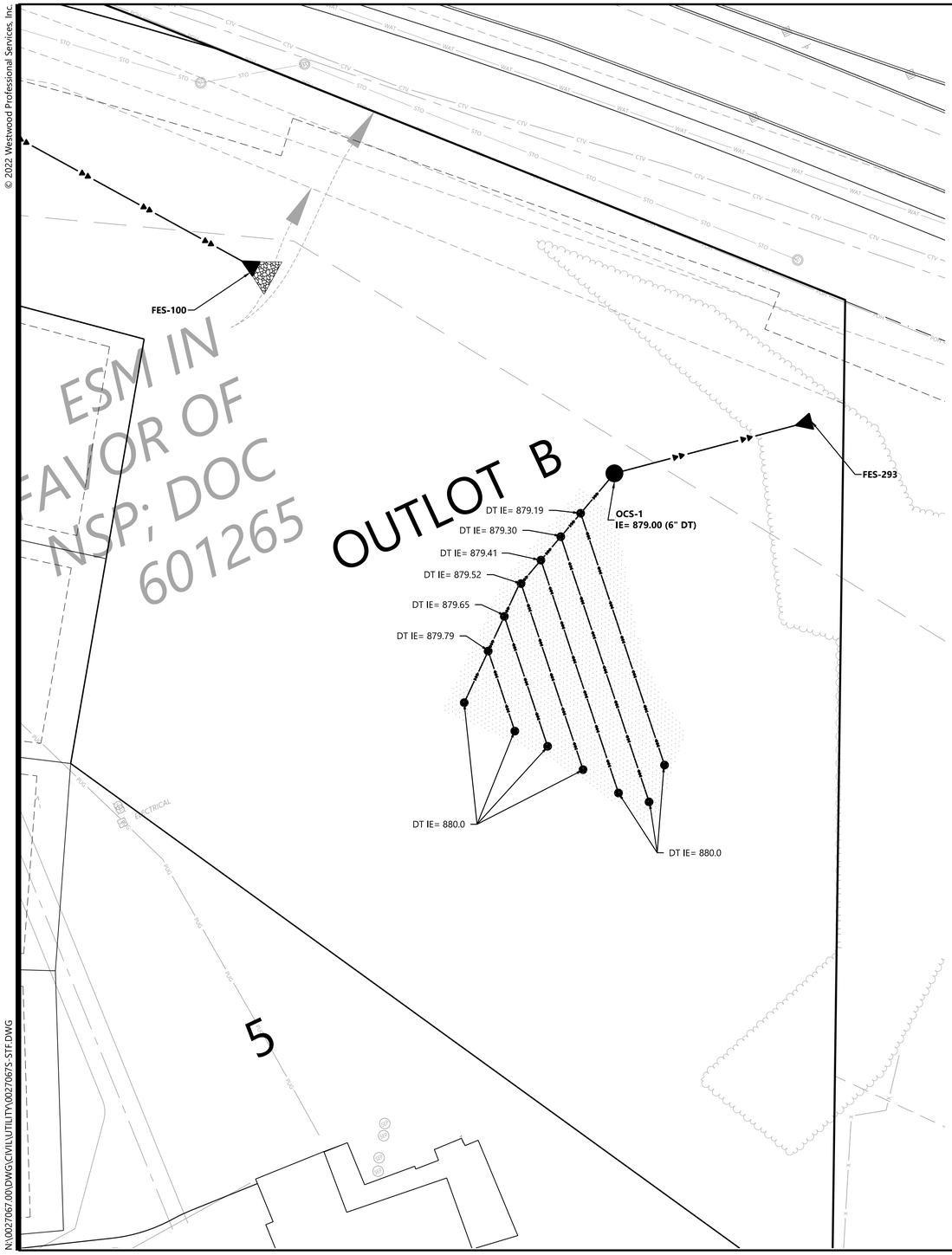

OCS 1- FES 293

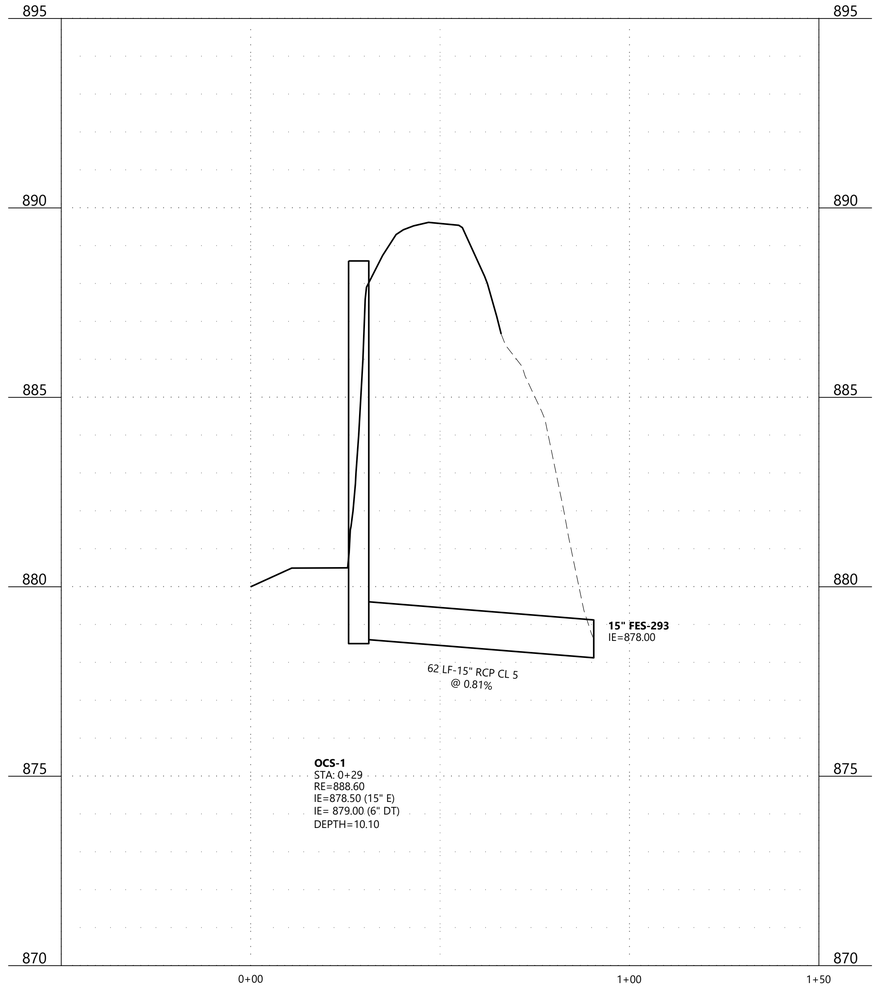

Call 48 Hours before digging:
811 or call811.com
Common Ground Alliance

LEGEND

EXISTING	PROPOSED	
× 900.00	× 900.00	GUTTER ELEVATION

GENERAL NOTES

1. RADIUS TO BE B618 CURB & GUTTER WITH 10' TRANSITIONS FROM SURMOUNTABLE CURB & GUTTER.
2. ALL RCP SHALL BE CLASS V, UNLESS OTHERWISE NOTED.
3. ALL CATCH BASIN CASTINGS IN CURB SHALL BE SUMPED 0.15 FEET. MANHOLE CASTINGS IN PAVED AREAS SHALL BE SUMPED 0.05 FEET. RIM ELEVATIONS SHOWN ON THE PROFILES REFLECT THE SUMPED ELEVATIONS.

1" = 20'
0' 20' 40' 60'

CONSTRUCTION PLANS

RIVERTOWN HEIGHTS

N:\0027067.00\DWG\CIVIL\UTILITY\0027067S-STF.DWG

DESIGNED:	FDH II
CHECKED:	JHB
DRAWN:	CTY
HORIZONTAL SCALE:	20'
VERTICAL SCALE:	4' OR 2'

INITIAL ISSUE: 04/29/22
REVISIONS:

1	05/25/22	REVISED FOR CITY COMMENTS
2	.	.
3	.	.
4	.	.
5	.	.

PREPARED FOR:

DR HORTON, INC. - MINNESOTA
20860 KENBRIDGE COURT, SUITE 100
LAKEVILLE, MINNESOTA 55044

I HEREBY CERTIFY THAT THIS PLAN WAS PREPARED BY ME OR UNDER MY DIRECT SUPERVISION AND THAT I AM A DULY LICENSED PROFESSIONAL ENGINEER UNDER THE LAWS OF THE STATE OF MINNESOTA

DATE: 05/25/22 LICENSE NO. 43358

RIVERTOWN HEIGHTS
CHASKA, MN

Westwood
Phone (952) 937-5150 12701 Whitewater Drive, Suite #300
Fax (952) 937-5822 Minnetonka, MN 55343
Toll Free (888) 937-5150 westwoodps.com
Westwood Professional Services, Inc.

STREET AND STORM SEWER CONSTRUCTION PLANS
PROJECT NUMBER: 0027067.00

SHEET NUMBER: 13 OF 22
DATE: 05/25/22

© 2022 Westwood Professional Services, Inc.

Call 48 Hours before digging:
811 or call811.com
Common Ground Alliance

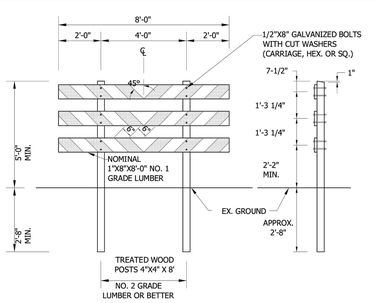

NOTE
THE BARRICADE BOARD FACE SURFACES SHALL BE FULLY RELECTORIZED IN ALTERNATE SILVER-WHITE AND RED STRIPING, USING A REFLECTIVE SHEETING CONFORMING TO THE REQUIREMENTS OF MNDOT SPEC. 3352.

PRIOR TO INSTALLING THE REFLECTIVE SHEETING, THE BARRICADE BOARDS SHALL BE GIVEN A COMPLETE COATING OF WHITE WOOD PRIMER PAINT FOLLOWED BY A SECOND COAT OF WHITE EXTERIOR APPLIED ONLY TO THE SURFACES NOT COVERED WITH REFLECTIVE SHEETING.

THE BARRICADE BOARDS SHALL BE COMPLETELY PAINTED AND RELECTORIZED SHEETING APPLIED BEFORE BEING INSTALLED ON THE POSTS.

THE PLACEMENT OF THE BARRICADE SHALL BE 10'-0" FROM THE END OF THE BITUMINOUS ROAD WITH THE BARRICADE CENTERED ON THE ROADWAY FACING THE FLOW OF TRAFFIC.

Stantec
3500 Highway 36 W
St. Paul, MN 55113
www.stantec.com

PERMANENT BARRICADE

CHASKA, MINNESOTA

LAST REVISION: MARCH 2008

PLATE NO. GEN-4

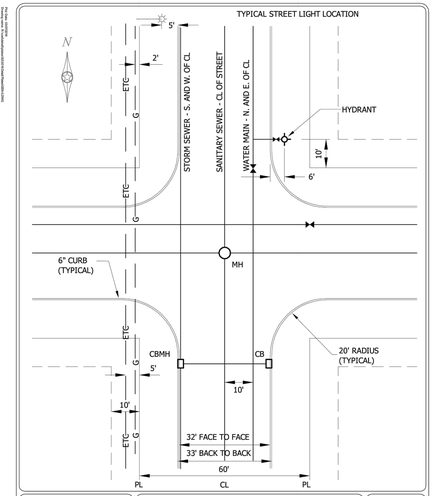

Stantec
3500 Highway 36 W
St. Paul, MN 55113
www.stantec.com

TYPICAL UTILITY LOCATIONS (PUBLIC AND PRIVATE)

CHASKA, MINNESOTA

LAST REVISION: MARCH 2016

PLATE NO. GEN-5

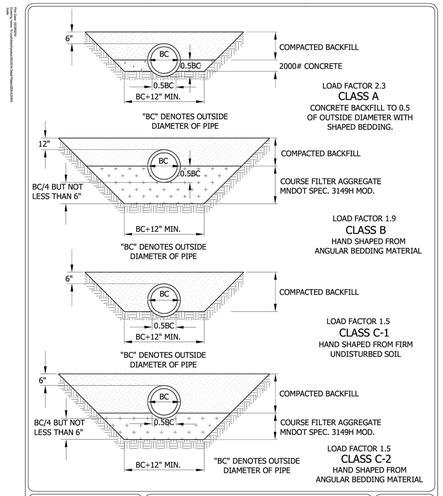

Stantec
3500 Highway 36 W
St. Paul, MN 55113
www.stantec.com

BEDDING METHODS FOR RCP OR DIP

CHASKA, MINNESOTA

LAST REVISION: MARCH 2001

PLATE NO. GEN-6

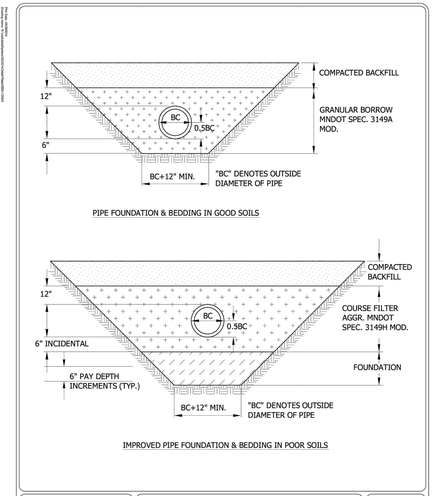

Stantec
3500 Highway 36 W
St. Paul, MN 55113
www.stantec.com

BEDDING METHODS FOR PVC

CHASKA, MINNESOTA

LAST REVISION: MARCH 2008

PLATE NO. GEN-7

NOTE: WATER MAIN BURIED LESS THAN 7.5' TO BE APPROVED BY OWNER

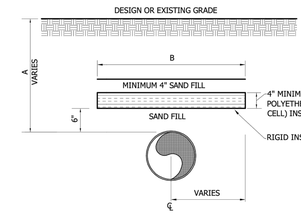

NOTE: PIPE SHALL BE CENTERED UNDER INSULATION UNLESS OTHERWISE SPECIFIED. STAGGER/ OFFSET JOINTS 2' MINIMUM BETWEEN SHEET LAYERS.

COVER OVER PIPE - A	WIDTH OF INSULATING BOARD - B
2'	11'
3'	9'
4'	7'
5'	5'
6'	3'

Stantec
3500 Highway 36 W
St. Paul, MN 55113
www.stantec.com

INSULATION DETAIL

CHASKA, MINNESOTA

LAST REVISION: APRIL 2016

PLATE NO. GEN-8

PRECAST INVERT WITH A MINIMUM 1% THROUGH SLOPE REQUIRED.
PRECAST INVERT MUST BE 1/2 DIAMETER OF THE PIPE AND BENCHES SLOPED 2" TOWARD THE INVERT.

FRAME	A	B
R1642-2310B	27"	7"
R1755G	27"	7"

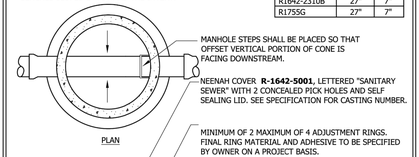

MANHOLE STEPS SHALL BE PLACED SO THAT OFFSET VERTICAL PORTION OF CONE IS FACING DOWNSTREAM.

NEENAH COVER **R-1642-5001**, LETTERED "SANITARY SEWER" WITH 2 CONCEALED PICK HOLES AND SELF SEALING LID. SEE SPECIFICATION FOR CASTING NUMBER.

MINIMUM OF 2 MAXIMUM OF 4 ADJUSTMENT RINGS. FINAL RING MATERIAL AND ADHESIVE TO BE SPECIFIED BY OWNER ON A PROJECT BASIS.

MAXIMUM 20"ADJUSTMENT ALLOWED INCLUDING RINGS AND CASTING.

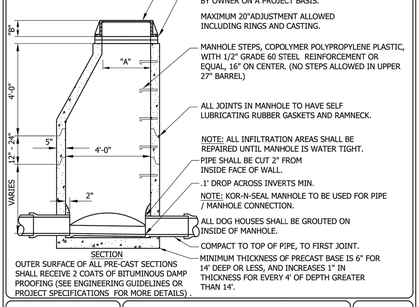

MANHOLE STEPS, COPOLYMER POLYPROPYLENE PLASTIC, WITH 1/2" GRADE 60 STEEL REINFORCEMENT OR EQUAL, 16" ON CENTER. (NO STEPS ALLOWED IN UPPER 27" BARREL)

ALL JOINTS IN MANHOLE TO HAVE SELF LUBRICATING RUBBER GASKETS AND RAMNECK.

NOTE: ALL INFILTRATION AREAS SHALL BE REPAIRED UNTIL MANHOLE IS WATER TIGHT.

PIPE SHALL BE CUT 2" FROM INSIDE FACE OF WALL.

.1' DROP ACROSS INVERTS MIN.

NOTE: KOR-N-SEAL MANHOLE TO BE USED FOR PIPE / MANHOLE CONNECTION.

ALL DOG HOUSES SHALL BE GROUTED ON INSIDE OF MANHOLE.

COMPACT TO TOP OF PIPE, TO FIRST JOINT.

MINIMUM THICKNESS OF PRECAST BASE IS 6" FOR 14' DEEP OR LESS, AND INCREASES 1" IN THICKNESS FOR EVERY 4' OF DEPTH GREATER THAN 14'.

OUTER SURFACE OF ALL PRE-CAST SECTIONS SHALL RECEIVE 2 COATS OF BITUMINOUS DAMP PROOFING (SEE ENGINEERING GUIDELINES OR PROJECT SPECIFICATIONS FOR MORE DETAILS) .

Stantec
3500 Highway 36 W
St. Paul, MN 55113
www.stantec.com

SANITARY SEWER MANHOLE

CHASKA, MINNESOTA

LAST REVISION: MARCH 2018

PLATE NO. SAN-1

PRECAST INVERT WITH A MINIMUM 1% THROUGH SLOPE REQUIRED.
PRECAST INVERT MUST BE 1/2 DIAMETER OF THE PIPE AND BENCHES SLOPED 2" TOWARD THE INVERT.
OUTER SURFACE OF ALL PRE-CAST SECTIONS SHALL RECEIVE 2 COATS OF BITUMINOUS DAMP PROOFING (SEE ENGINEERING GUIDELINES OR PROJECT SPECIFICATIONS FOR MORE DETAILS) .

FRAME	A	B
R16420245	27"	7"
R1755G	27"	7"

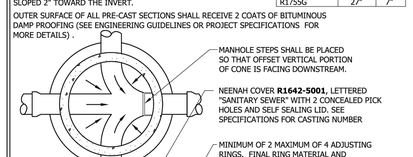

MANHOLE STEPS SHALL BE PLACED SO THAT OFFSET VERTICAL PORTION OF CONE IS FACING DOWNSTREAM.

NEENAH COVER **R1642-5001**, LETTERED "SANITARY SEWER" WITH 2 CONCEALED PICK HOLES AND SELF SEALING LID. SEE SPECIFICATIONS FOR CASTING NUMBER

MINIMUM OF 2 MAXIMUM OF 4 ADJUSTING RINGS. FINAL RING MATERIAL AND ADHESIVE TO BE SPECIFIED BY OWNER ON A PROJECT BASIS.

MAXIMUM 20" ADJUSTMENT ALLOWED INCLUDING RINGS AND CASTING

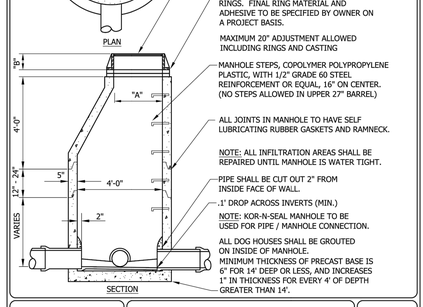

MANHOLE STEPS, COPOLYMER POLYPROPYLENE PLASTIC, WITH 1/2" GRADE 60 STEEL REINFORCEMENT OR EQUAL, 16" ON CENTER. (NO STEPS ALLOWED IN UPPER 27" BARREL)

ALL JOINTS IN MANHOLE TO HAVE SELF LUBRICATING RUBBER GASKETS AND RAMNECK.

NOTE: ALL INFILTRATION AREAS SHALL BE REPAIRED UNTIL MANHOLE IS WATER TIGHT.

PIPE SHALL BE CUT OUT 2" FROM INSIDE FACE OF WALL.

.1' DROP ACROSS INVERTS (MIN.)

NOTE: KOR-N-SEAL MANHOLE TO BE USED FOR PIPE / MANHOLE CONNECTION.

ALL DOG HOUSES SHALL BE GROUTED ON INSIDE OF MANHOLE. MINIMUM THICKNESS OF PRECAST BASE IS 6" FOR 14' DEEP OR LESS, AND INCREASES 1" IN THICKNESS FOR EVERY 4' OF DEPTH GREATER THAN 14'.

Stantec
3500 Highway 36 W
St. Paul, MN 55113
www.stantec.com

SANITARY SEWER JUNCTION MANHOLE

CHASKA, MINNESOTA

LAST REVISION: MARCH 2018

PLATE NO. SAN-2

FRAME	A	B
R1642-2310B	27"	7"
R1755G	27"	7"

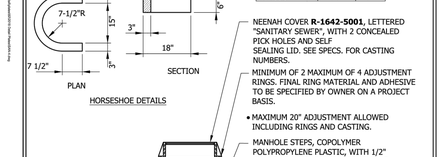

NEENAH COVER **R-1642-5001**, LETTERED "SANITARY SEWER", WITH 2 CONCEALED PICK HOLES AND SELF SEALING LID. SEE SPECS. FOR CASTING NUMBERS.

MINIMUM OF 2 MAXIMUM OF 4 ADJUSTMENT RINGS. FINAL RING MATERIAL AND ADHESIVE TO BE SPECIFIED BY OWNER ON A PROJECT BASIS.

- MAXIMUM 20" ADJUSTMENT ALLOWED INCLUDING RINGS AND CASTING.
- MANHOLE STEPS, COPOLYMER POLYPROPYLENE PLASTIC, WITH 1/2" GRADE 60 STEEL REINFORCEMENT OR EQUAL 16" ON CENTER. (NO STEPS ALLOWED IN UPPER 27" BARREL.)
- MANHOLE STEPS SHALL BE PLACED SO THAT OFFSET VERTICAL PORTION OF CONE IS FACING DOWNSTREAM.

ALL JOINTS IN MANHOLE TO HAVE SELF LUBRICATING RUBBER GASKETS AND RAMNECK.

- NOTE: ALL INFILTRATION AREAS SHALL BE REPAIRED UNTIL MANHOLE IS WATER TIGHT.
- NOTE: OUTER SURFACE OF ALL PRE-CAST SECTIONS SHALL RECEIVE 2 COATS OF BITUMINOUS DAMP PROOFING (SEE ENGINEERING GUIDELINES OR PROJECT SPECIFICATIONS FOR MORE DETAILS).
- INTERIOR MANHOLE WALL SHALL BE COMPLETELY LINED WITH HDPE, SEE SPEC FOR MORE DETAILS.
- PIPE SHALL BE CUT OUT FLUSH WITH INSIDE FACE OF WALL.
- NOTE: KOR-N-SEAL MANHOLE TO BE USED FOR PIPE / MANHOLE CONNECTION.
- ALL DOG HOUSES SHALL BE GROUTED ON INSIDE OF MANHOLE. PRECAST INVERT SHOULD BE 1/2 DIAMETER OF PIPE AND BENCHES SLOPED 2" TOWARD INVERT.

Stantec
3500 Highway 36 W
St. Paul, MN 55113
www.stantec.com

SANITARY SEWER DROP INLET MANHOLE

CHASKA, MINNESOTA

LAST REVISION: MARCH 2018

PLATE NO. SAN-4

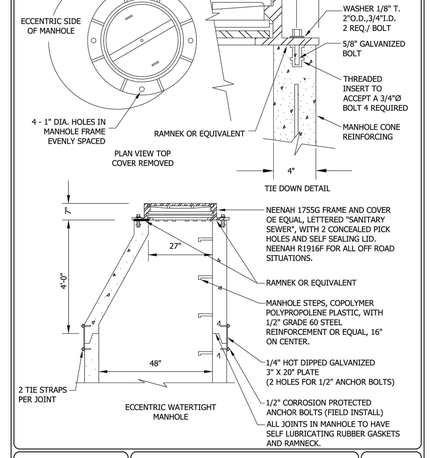

Stantec
3500 Highway 36 W
St. Paul, MN 55113
www.stantec.com

WATERTIGHT CASTING FOR SANITARY SEWER MANHOLE

CHASKA, MINNESOTA

LAST REVISION: MARCH 2018

PLATE NO. SAN-5

NOTES: CORE BLUE BOLTS REQUIRED FOR ALL MECHANICAL FITTINGS. ANTI-CORROSIVE COATING REQUIRED ON ALL BOLTS AND TIE ROD ASSEMBLIES.

- PROVIDE POLYWRAP AROUND ALL WATERMAIN
- 7.5' MINIMUM COVER REQUIRED OVER TOP OF WATER MAIN.
- RESTRAIN TEE AND VALVE WITH EPOXY COATED MEGALUG (OR EQUAL) THRUST RESTRAINTS.

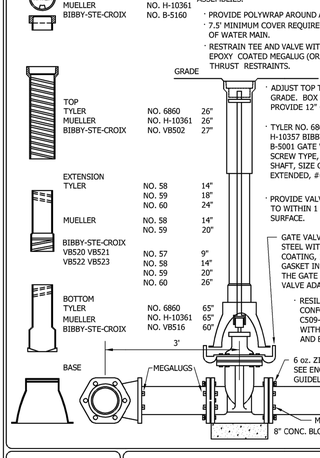

- ADJUST TOP TO 1/2" BELOW GRADE. BOX TO BE SET TO PROVIDE 12" OF ADJUSTMENT.
- TYLER NO. 6860 MUELLER NO. H-10357 BIBBY-STE-CROIX B-5001 GATE VALVE BOX, SCREW TYPE, 3 PIECE, 5 1/4" SHAFT, SIZE G BOX, 7'-6" EXTENDED, #6 ROUND BASE
- PROVIDE VALVE STEM RISERS TO WITHIN 1 FOOT OF THE SURFACE.
- GATE VALVE ADAPTER: 1/4" STEEL WITH PROTECTIVE COATING, 1/2" RUBBER GASKET INSTALLED BETWEEN THE GATE VALVE AND GATE VALVE ADAPTER.
- RESILIANT WEDGE VALVE CONFORMING TO AWWA C509-01 OR C515 STANDARDS WITH STAINLESS STEEL BOLTS AND BRONZE TOP NUT
- 6 oz. ZINC ANODE CAP. SEE ENGINEERING GUIDELINES

Stantec
733 Marquette Ave Suite 1000
Minneapolis, MN 55402
www.stantec.com

GATE VALVE AND BOX INSTALLATION

CHASKA, MINNESOTA

LAST REVISION: MARCH 2019

PLATE NO. WAT-1

N:\0027067.00\DWG\CIVIL\UTILITY\00270675 - DT01.DWG

RIVERTOWN HEIGHTS

DESIGNED: FDH II
CHECKED: JHB
DRAWN: CTY
HORIZONTAL SCALE: ###
VERTICAL SCALE: ### OR ##

INITIAL ISSUE: 04/29/22
REVISIONS:
1 05/25/22 REVISED FOR CITY COMMENTS
2 . .
3 . .
4 . .
5 . .

PREPARED FOR:

DR HORTON, INC. - MINNESOTA

20860 KENBRIDGE COURT, SUITE 100
LAKEVILLE, MINNESOTA 55044

I HEREBY CERTIFY THAT THIS PLAN WAS PREPARED BY ME OR UNDER MY DIRECT SUPERVISION AND THAT I AM A DULY LICENSED PROFESSIONAL ENGINEER UNDER THE LAWS OF THE STATE OF MINNESOTA

JOHN H. BENDER
DATE: 05/25/22 LICENSE NO. 43358

RIVERTOWN HEIGHTS

CHASKA, MN

Westwood

Phone (952) 937-5150
Fax (952) 937-5822
Toll Free (888) 937-5150

12701 Whitewater Drive, Suite #300
Minnetonka, MN 55343
westwoodps.com

Westwood Professional Services, Inc.

DETAILS

PROJECT NUMBER: 0027067.00

SHEET NUMBER: 14 OF 22

DATE: 05/25/22

© 2022 Westwood Professional Services, Inc.

Call 48 Hours before digging:
811 or call811.com
Common Ground Alliance

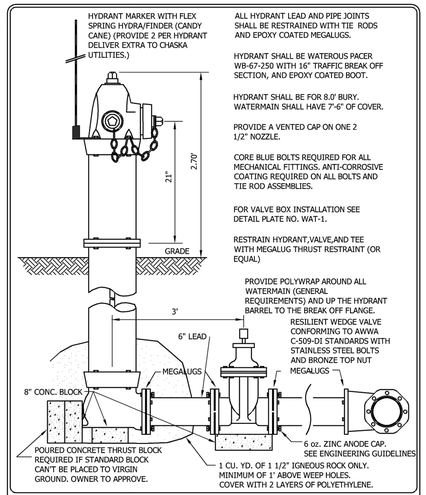

Stantec
733 Marquette Ave Suite 1000
Minneapolis, MN 55402
www.stantec.com

WATEROUS PACER HYDRANT AND VALVE INSTALLATION

CHASKA, MINNESOTA

LAST REVISION: MARCH 2019

PLATE NO. WAT-2

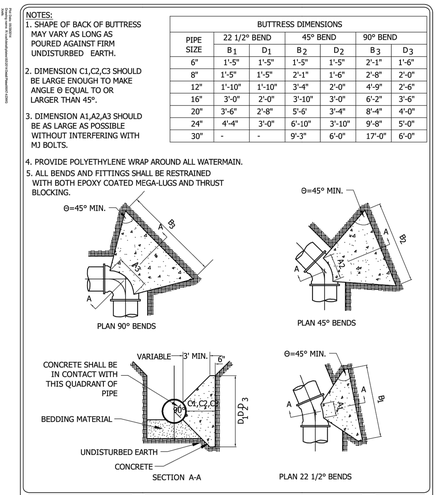

Stantec
2000 Highway 36 W
St. Paul, MN 55113
www.stantec.com

CONCRETE THRUST BLOCKING

CHASKA, MINNESOTA

LAST REVISION: APRIL 2005

PLATE NO. WAT-4

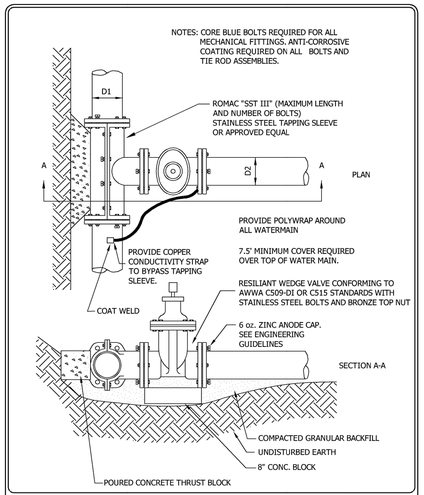

Stantec
733 Marquette Ave Suite 1000
Minneapolis, MN 55402
www.stantec.com

WATER MAIN WET TAP

CHASKA, MINNESOTA

LAST REVISION: MARCH 2019

PLATE NO. WAT-5

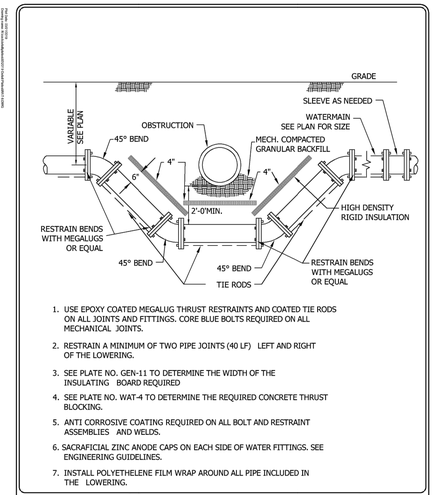

1. USE EPOXY COATED MEGALUG THRUST RESTRAINTS AND COATED TIE RODS ON ALL JOINTS AND FITTINGS. CORE BLUE BOLTS REQUIRED ON ALL MECHANICAL JOINTS.
2. RESTRAIN A MINIMUM OF TWO PIPE JOINTS (40 LF) LEFT AND RIGHT OF THE LOWERING.
3. SEE PLATE NO. GEN-11 TO DETERMINE THE WIDTH OF THE INSULATING BOARD REQUIRED
4. SEE PLATE NO. WAT-4 TO DETERMINE THE REQUIRED CONCRETE THRUST BLOCKING.
5. ANTI CORROSIVE COATING REQUIRED ON ALL BOLT AND RESTRAINT ASSEMBLIES AND WELDS.
6. SACRAFICIAL ZINC ANODE CAPS ON EACH SIDE OF WATER FITTINGS. SEE ENGINEERING GUIDELINES.
7. INSTALL POLYETHELENE FILM WRAP AROUND ALL PIPE INCLUDED IN THE LOWERING.

Stantec
733 Marquette Ave Suite 1000
Minneapolis, MN 55402
www.stantec.com

WATER MAIN LOWERING WITH INSULATION DETAIL

CHASKA, MINNESOTA

LAST REVISION: MARCH 2019

PLATE NO. WAT-6

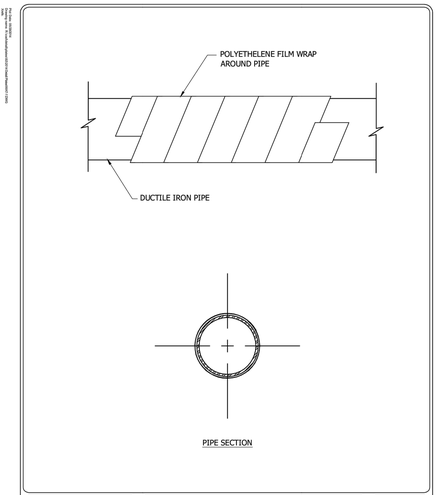

Stantec
2000 Highway 36 W
St. Paul, MN 55113
www.stantec.com

TYPICAL WATER MAIN INSTALLATION

CHASKA, MINNESOTA

LAST REVISION: MARCH 2008

PLATE NO. WAT-7

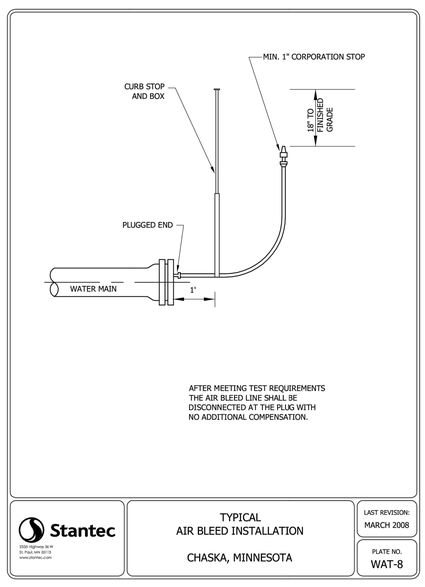

Stantec
2000 Highway 36 W
St. Paul, MN 55113
www.stantec.com

TYPICAL AIR BLEED INSTALLATION

CHASKA, MINNESOTA

LAST REVISION: MARCH 2008

PLATE NO. WAT-8

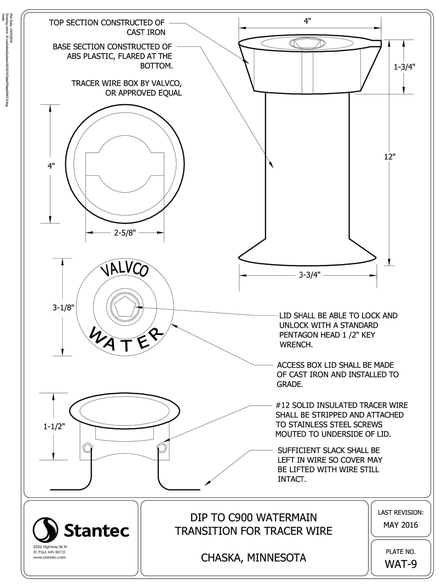

Stantec
2000 Highway 36 W
St. Paul, MN 55113
www.stantec.com

DIP TO C900 WATERMAIN TRANSITION FOR TRACER WIRE

CHASKA, MINNESOTA

LAST REVISION: MAY 2016

PLATE NO. WAT-9

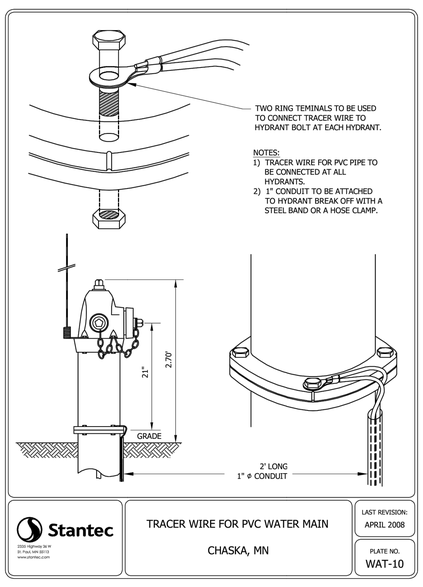

Stantec
2000 Highway 36 W
St. Paul, MN 55113
www.stantec.com

TRACER WIRE FOR PVC WATER MAIN

CHASKA, MN

LAST REVISION: APRIL 2008

PLATE NO. WAT-10

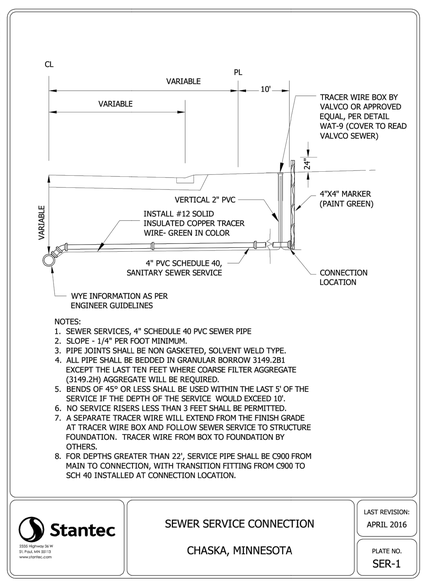

NOTES:
1. SEWER SERVICES, 4" SCHEDULE 40 PVC SEWER PIPE
2. SLOPE - 1/4" PER FOOT MINIMUM.
3. PIPE JOINTS SHALL BE NON GASKETED, SOLVENT WELD TYPE.
4. ALL PIPE SHALL BE BEDDED IN GRANULAR BORROW 3149.2B1 EXCEPT THE LAST TEN FEET WHERE COARSE FILTER AGGREGATE (3149.2H) AGGREGATE WILL BE REQUIRED.
5. BENDS OF 45° OR LESS SHALL BE USED WITHIN THE LAST 5' OF THE SERVICE IF THE DEPTH OF THE SERVICE WOULD EXCEED 10'.
6. NO SERVICE RISERS LESS THAN 3 FEET SHALL BE PERMITTED.
7. A SEPARATE TRACER WIRE WILL EXTEND FROM THE FINISH GRADE AT TRACER WIRE BOX AND FOLLOW SEWER SERVICE TO STRUCTURE FOUNDATION. TRACER WIRE FROM BOX TO FOUNDATION BY OTHERS.
8. FOR DEPTHS GREATER THAN 22', SERVICE PIPE SHALL BE C900 FROM MAIN TO CONNECTION, WITH TRANSITION FITTING FROM C900 TO SCH 40 INSTALLED AT CONNECTION LOCATION.

Stantec
2000 Highway 36 W
St. Paul, MN 55113
www.stantec.com

SEWER SERVICE CONNECTION

CHASKA, MINNESOTA

LAST REVISION: APRIL 2016

PLATE NO. SER-1

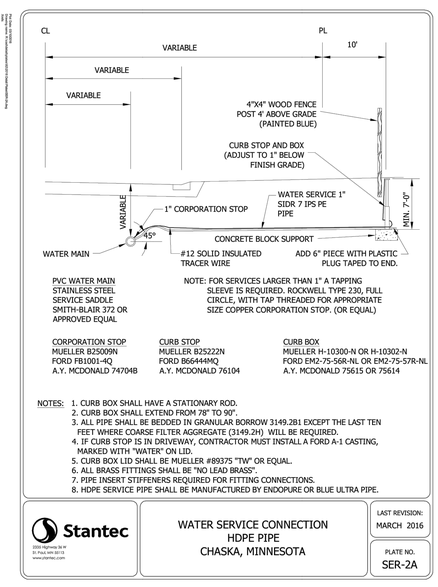

PVC WATER MAIN
STAINLESS STEEL SERVICE SADDLE
SMITH-BLAIR 372 OR APPROVED EQUAL

NOTE: FOR SERVICES LARGER THAN 1" A TAPPING SLEEVE IS REQUIRED. ROCKWELL TYPE 230, FULL CIRCLE, WITH TAP THREADED FOR APPROPRIATE SIZE COPPER CORPORATION STOP. (OR EQUAL)

CORPORATION STOP	CURB STOP	CURB BOX
MUELLER B25009N	MUELLER B25222N	MUELLER H-10300-N OR H-10302-N
FORD FB1001-4Q	FORD B66444MQ	FORD EM2-75-S6R-NL OR EM2-75-S7R-NL
A.Y. MCDONALD 74704B	A.Y. MCDONALD 76104	A.Y. MCDONALD 75615 OR 75614

NOTES:
1. CURB BOX SHALL HAVE A STATIONARY ROD.
2. CURB BOX SHALL EXTEND FROM 78" TO 90".
3. ALL PIPE SHALL BE BEDDED IN GRANULAR BORROW 3149.2B1 EXCEPT THE LAST TEN FEET WHERE COARSE FILTER AGGREGATE (3149.2H) WILL BE REQUIRED.
4. IF CURB STOP IS IN DRIVEWAY, CONTRACTOR MUST INSTALL A FORD A-1 CASTING, MARKED WITH "WATER" ON LID.
5. CURB BOX LID SHALL BE MUELLER #89375 "TW" OR EQUAL.
6. ALL BRASS FITTINGS SHALL BE "NO LEAD BRASS".
7. PIPE INSERT STIFFENERS REQUIRED FOR FITTING CONNECTIONS.
8. HDPE SERVICE PIPE SHALL BE MANUFACTURED BY ENDOPURE OR BLUE ULTRA PIPE.

Stantec
2000 Highway 36 W
St. Paul, MN 55113
www.stantec.com

WATER SERVICE CONNECTION HDPE PIPE

CHASKA, MINNESOTA

LAST REVISION: MARCH 2016

PLATE NO. SER-2A

N:\0027067.00\DWG\CIVIL\UTILITY\00270675 - DT01.DWG

RIVERTOWN HEIGHTS

DESIGNED: FDH II
CHECKED: JHB
DRAWN: CTY
HORIZONTAL SCALE: ###
VERTICAL SCALE: ### OR ##

INITIAL ISSUE: 04/29/22
REVISIONS:
1 05/25/22 REVISED FOR CITY COMMENTS
2 . .
3 . .
4 . .
5 . .

PREPARED FOR:

DR HORTON, INC. - MINNESOTA

20860 KENBRIDGE COURT, SUITE 100
LAKEVILLE, MINNESOTA 55044

I HEREBY CERTIFY THAT THIS PLAN WAS PREPARED BY ME OR UNDER MY DIRECT SUPERVISION AND THAT I AM A DULY LICENSED PROFESSIONAL ENGINEER UNDER THE LAWS OF THE STATE OF MINNESOTA

JOHN H. BENDER
DATE: 05/25/22 LICENSE NO. 43358

RIVERTOWN HEIGHTS

CHASKA, MN

Westwood

Phone (952) 937-5150 12701 Whitewater Drive, Suite #300
Fax (952) 937-5822 Minnetonka, MN 55343
Toll Free (888) 937-5150 westwoodps.com

Westwood Professional Services, Inc.

DETAILS

SHEET NUMBER: 15 OF 22

PROJECT NUMBER: 0027067.00

DATE: 05/25/22

© 2022 Westwood Professional Services, Inc.

Call 48 Hours before digging:
811 or call811.com
Common Ground Alliance

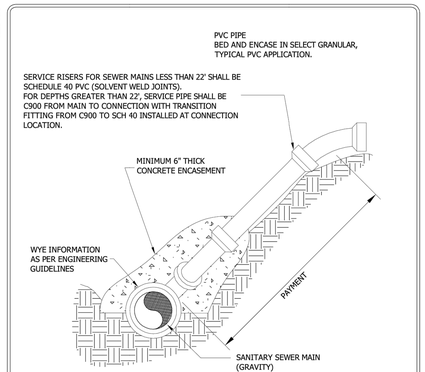

SERVICE RISER

CHASKA, MINNESOTA

LAST REVISION: MARCH 2016

PLATE NO. SER-3

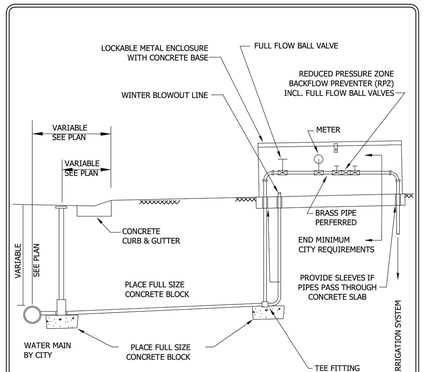

NOTES:
1. CITY WATER SERVICE & PLUMBING PERMITS REQUIRED FOR WORK BY PRIVATE CONTRACTORS.
2. ANNUAL TESTING OF RPZ REQUIRED
3. REQUIRED EQUIPMENT MUST BE ENCLOSED AND SUPPORTED.
4. ENCLOSURE MUST BE APPROVED BY CITY WATER DEPT. ENCLOSURE MUST BE LOCKED WITH A HEAVY DUTY PADLOCK. (SUPPLIED BY CITY)
5. SLEEVES FOR PIPES IN CONCRETE SLABS SHALL BE 4" DIAMETER PVC OR SIMILAR.
6. IF A 1-1/2" IRRIGATION SERVICE IS USED THEN THE CURBSTOP MUST BE LOCATED IN THE GREEN AREA.

IRRIGATION SERVICE BY PRIVATE CONTRACTOR

CHASKA, MINNESOTA

LAST REVISION: MARCH 2018

PLATE NO. SER-6

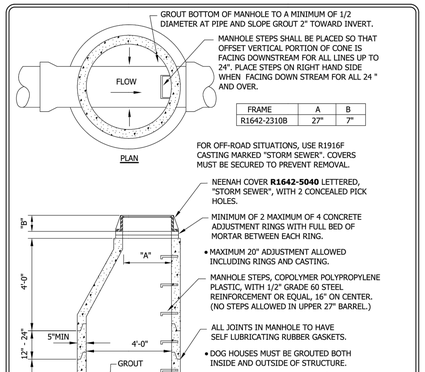

FRAME	A	B
R1642-2310B	27"	7"

STORM SEWER MANHOLE

CHASKA, MINNESOTA

LAST REVISION: MARCH 2018

PLATE NO. STO-1

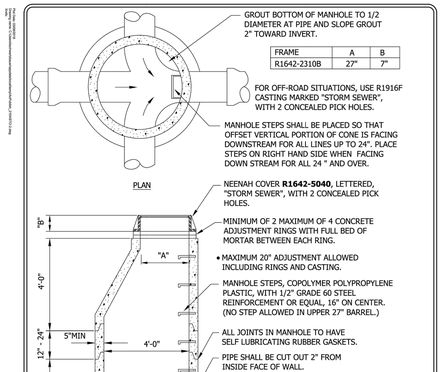

FRAME	A	B
R1642-2310B	27"	7"

STORM SEWER JUNCTION MANHOLE

CHASKA, MINNESOTA

LAST REVISION: MARCH 2018

PLATE NO. STO-2

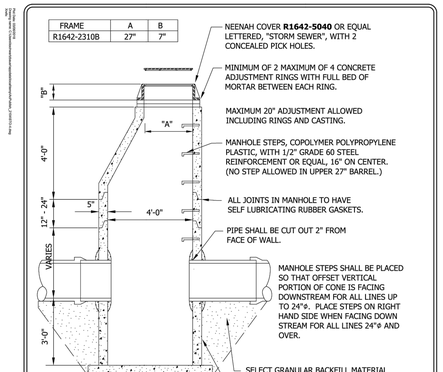

PERFORATED SUMP MANHOLE

CHASKA, MINNESOTA

LAST REVISION: MARCH 2018

PLATE NO. STO-4

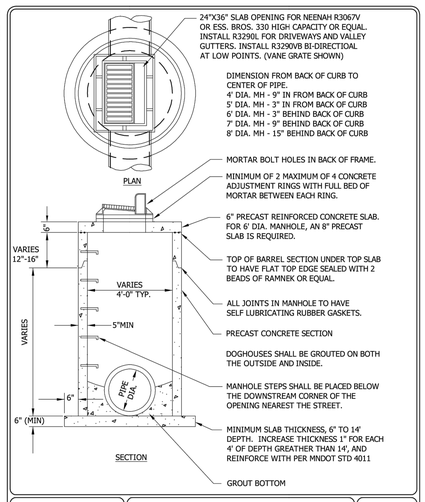

TYPE II CATCHBASIN MANHOLE

CHASKA, MINNESOTA

LAST REVISION: MARCH 2018

PLATE NO. STO-5

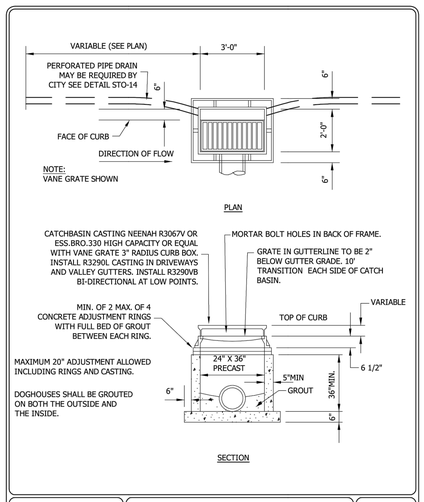

TYPE II CATCHBASIN

CHASKA, MINNESOTA

LAST REVISION: MARCH 2018

PLATE NO. STO-6

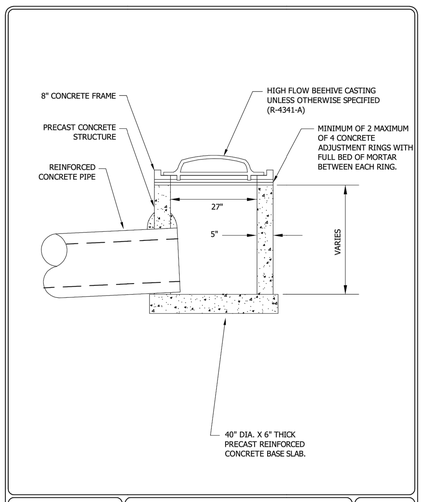

PRECAST 27" SHALLOW DEPTH BEEHIVE

CHASKA, MINNESOTA

LAST REVISION: MARCH 2018

PLATE NO. STO-9

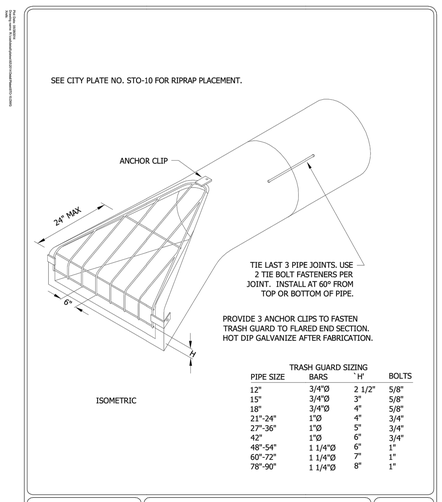

TRASH GUARD SIZING

PIPE SIZE	BARS	'H'	BOLTS
12"	3/4"Ø	2 1/2"	5/8"
15"	3/4"Ø	3"	5/8"
18"	3/4"Ø	4"	5/8"
21"-24"	1"Ø	4"	3/4"
27"-36"	1"Ø	5"	3/4"
42"	1"Ø	6"	3/4"
48"-54"	1 1/4"Ø	6"	1"
60"-72"	1 1/4"Ø	7"	1"
78"-90"	1 1/4"Ø	8"	1"

FLARED END SECTION AND TRASH GUARD

CHASKA, MINNESOTA

LAST REVISION: FEB. 1995

PLATE NO. STO-10

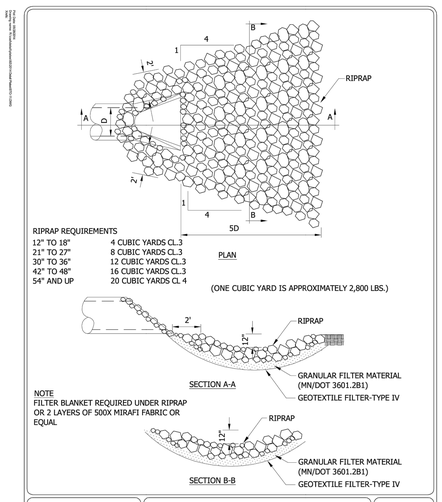

RIPRAP AT OUTLETS

CHASKA, MINNESOTA

LAST REVISION: APRIL 2004

PLATE NO. STO-11

DESIGNED: FDH II
CHECKED: JHB
DRAWN: CTY
HORIZONTAL SCALE: ###
VERTICAL SCALE: ### OR ##

INITIAL ISSUE: 04/29/22
REVISIONS:
1 05/25/22 REVISED FOR CITY COMMENTS

PREPARED FOR:

DR HORTON, INC. - MINNESOTA

20860 KENBRIDGE COURT, SUITE 100
LAKEVILLE, MINNESOTA 55044

I HEREBY CERTIFY THAT THIS PLAN WAS PREPARED BY ME OR UNDER MY DIRECT SUPERVISION AND THAT I AM A DULY LICENSED PROFESSIONAL ENGINEER UNDER THE LAWS OF THE STATE OF MINNESOTA

JOHN H. BENDER
DATE: 05/25/22 LICENSE NO. 43358

RIVERTOWN HEIGHTS

CHASKA, MN

Westwood
Phone (952) 937-5150 12701 Whitewater Drive, Suite #300
Fax (952) 937-5822 Minnetonka, MN 55343
Toll Free (888) 937-5150 westwoodps.com
Westwood Professional Services, Inc.

DETAILS

SHEET NUMBER: 16 OF 22

PROJECT NUMBER: 0027067.00

DATE: 05/25/22

© 2022 Westwood Professional Services, Inc.

Call 48 Hours before digging:
811 or call811.com
Common Ground Alliance

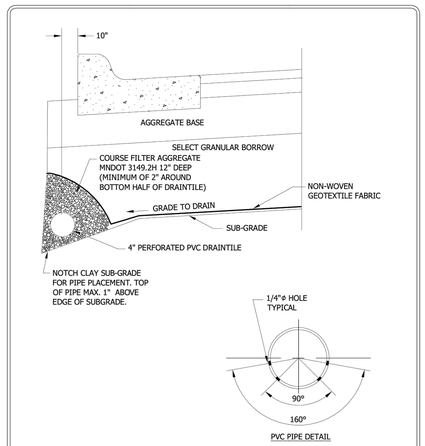

Stantec	PERFORATED PVC DRAINTILE PIPE BELOW CONCRETE CURB CHASKA, MINNESOTA	LAST REVISION: NOV. 2016 PLATE NO. STO-12

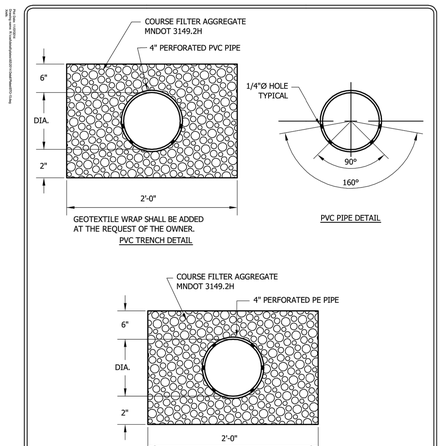

Stantec	PERFORATED PIPE TRENCH DETAIL CHASKA, MINNESOTA	LAST REVISION: NOV. 2014 PLATE NO. STO-13

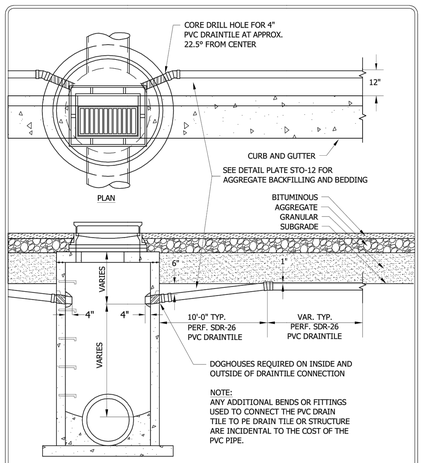

Stantec	DRAINTILE INSTALLATION INTO CATCHBASIN MANHOLE CHASKA, MINNESOTA	LAST REVISION: APRIL 2016 PLATE NO. STO-14

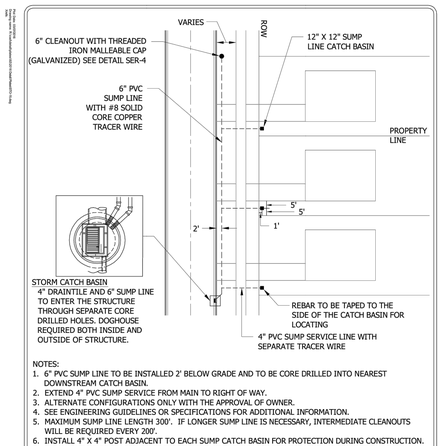

NOTES:
1. 6" PVC SUMP LINE TO BE INSTALLED 2' BELOW GRADE AND TO BE CORE DRILLED INTO NEAREST DOWNSTREAM CATCH BASIN.
2. EXTEND 4" PVC SUMP SERVICE FROM MAIN TO RIGHT OF WAY.
3. ALTERNATE CONFIGURATIONS ONLY WITH THE APPROVAL OF OWNER.
4. SEE ENGINEERING GUIDELINES OR SPECIFICATIONS FOR ADDITIONAL INFORMATION.
5. MAXIMUM SUMP LINE LENGTH 200'. IF LONGER SUMP LINE IS NECESSARY, INTERMEDIATE CLEANOUTS WILL BE REQUIRED EVERY 200'.
6. INSTALL 4" X 4" POST ADJACENT TO EACH SUMP CATCH BASIN FOR PROTECTION DURING CONSTRUCTION.
7. CLEAN OUT TO BE PLACED ON PROPERTY LINE AT END OF LAST SERVICE LINE. IF SERVICE FALLS IN DRIVEWAY THE MAINLINE WILL BE EXTENDED BEYOND DRIVEWAY/ALLEY TO ENSURE THE CLEANOUT IS IN GREEN SPACE.
8. A SEPARATE TRACER WIRE WILL EXTEND FROM THE FINISHED GRADE CLEANOUT LOCATION WITH TRACER WIRE BOX AND FOLLOW THE SUMP LINE TO THE STRUCTURE LOCATION.

Stantec	PVC SUMP LINE BEHIND CURB CHASKA, MINNESOTA	LAST REVISION: MAY 2016 PLATE NO. STO-15

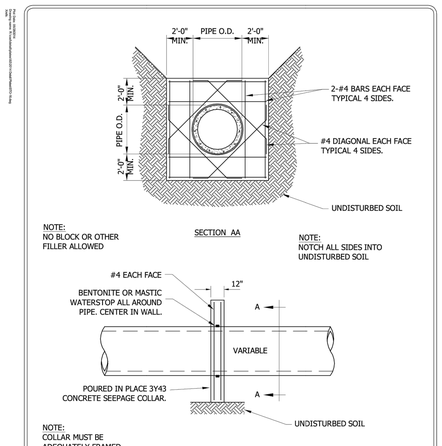

Stantec	SEEPAGE COLLAR CHASKA, MINNESOTA	LAST REVISION: MARCH 2001 PLATE NO. STO-16

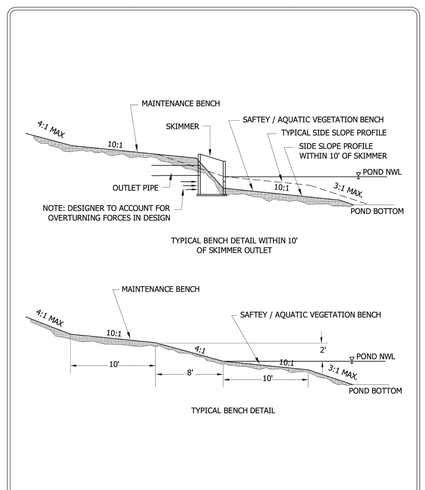

Stantec	TYPICAL BENCH DETAIL CHASKA, MINNESOTA	LAST REVISION: MARCH 2001 PLATE NO. STO-19

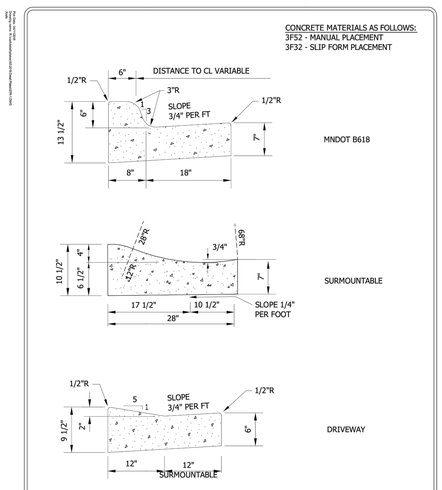

Stantec	CURB AND GUTTER CHASKA, MINNESOTA	LAST REVISION: APRIL 2016 PLATE NO. STR-1

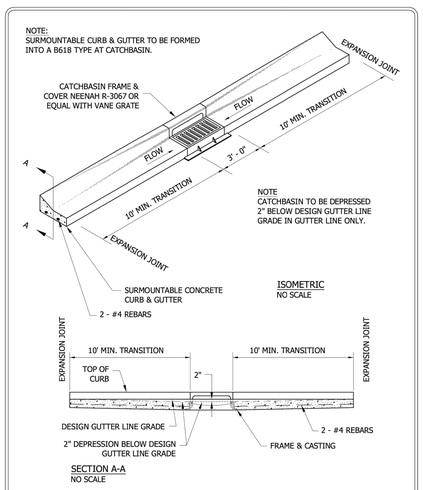

Stantec	SURMOUNTABLE CURB & GUTTER CONSTRUCTION AT CATCHBASIN CHASKA, MINNESOTA	LAST REVISION: MARCH 2008 PLATE NO. STR-5

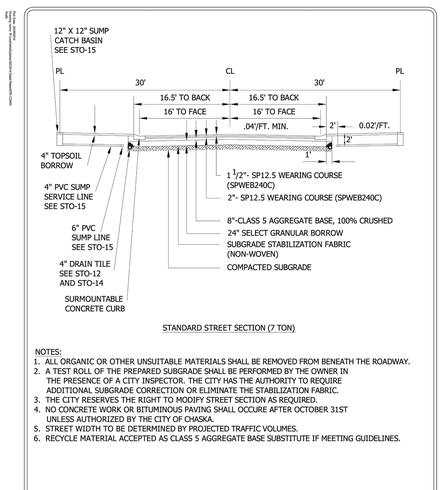

STANDARD STREET SECTION (7 TON)

NOTES:
1. ALL ORGANIC OR OTHER UNSUITABLE MATERIALS SHALL BE REMOVED FROM BENEATH THE ROADWAY.
2. A TEST ROLL OF THE PREPARED SUBGRADE SHALL BE PERFORMED BY THE OWNER IN THE PRESENCE OF A CITY INSPECTOR. THE CITY HAS THE AUTHORITY TO REQUIRE ADDITIONAL SUBGRADE CORRECTION OR ELIMINATE THE STABILIZATION FABRIC.
3. THE CITY RESERVES THE RIGHT TO MODIFY STREET SECTION AS REQUIRED.
4. NO CONCRETE WORK OR BITUMINOUS PAVING SHALL OCCURE AFTER OCTOBER 31ST UNLESS AUTHORIZED BY THE CITY OF CHASKA.
5. STREET WIDTH TO BE DETERMINED BY PROJECTED TRAFFIC VOLUMES.
6. RECYCLE MATERIAL ACCEPTED AS CLASS 5 AGGREGATE BASE SUBSTITUTE IF MEETING GUIDELINES.

Stantec	TYPICAL SECTIONS FOR RESIDENTIAL STREETS 7 TON SECTION CHASKA, MINNESOTA	LAST REVISION: JUNE 2012 PLATE NO. STR-7

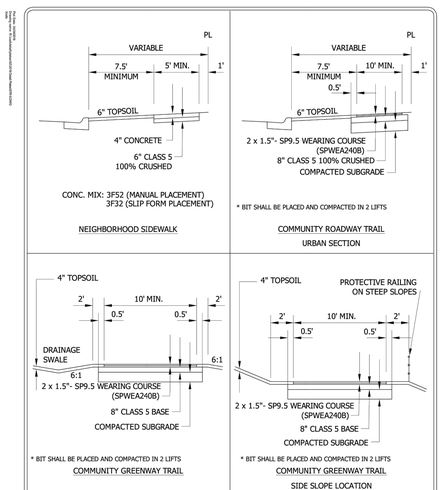

Stantec	TYPICAL PLACEMENT AND SECTION FOR WALKS AND TRAILS CHASKA, MINNESOTA	LAST REVISION: APRIL 2016 PLATE NO. STR-9

N:\0027067.00\DWG\CIVIL\UTILITY\00270675 - DT01.DWG

RIVERTOWN HEIGHTS

DESIGNED:	FDH II
CHECKED:	JHB
DRAWN:	CTY
HORIZONTAL SCALE:	###
VERTICAL SCALE:	### OR ##

INITIAL ISSUE: 04/29/22
REVISIONS:
1 05/25/22 REVISED FOR CITY COMMENTS
2 . .
3 . .
4 . .
5 . .

PREPARED FOR:

DR HORTON, INC. - MINNESOTA
20860 KENBRIDGE COURT, SUITE 100
LAKEVILLE, MINNESOTA 55044

I HEREBY CERTIFY THAT THIS PLAN WAS PREPARED BY ME OR UNDER MY DIRECT SUPERVISION AND THAT I AM A DULY LICENSED PROFESSIONAL ENGINEER UNDER THE LAWS OF THE STATE OF MINNESOTA
JOHN H. BENDER
DATE: 05/25/22 LICENSE NO. 43358

RIVERTOWN HEIGHTS
CHASKA, MN

Westwood
Phone (952) 937-5150 12701 Whitewater Drive, Suite #300
Fax (952) 937-5822 Minnetonka, MN 55343
Toll Free (888) 937-5150 westwoodps.com
Westwood Professional Services, Inc.

DETAILS

SHEET NUMBER: 17 OF 22
PROJECT NUMBER: 0027067.00 DATE: 05/25/22

© 2022 Westwood Professional Services, Inc.

Call 48 Hours before digging:
811 or call811.com
Common Ground Alliance

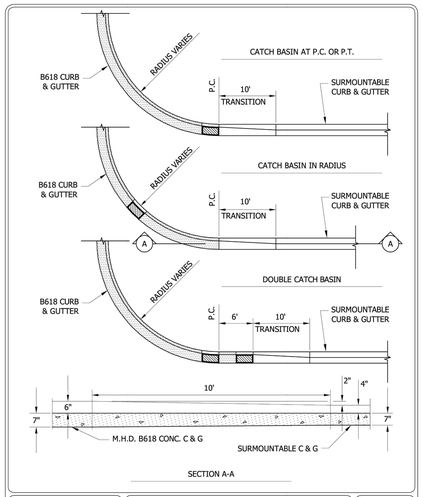

Stantec
3500 Highway 36 W
St. Paul, MN 55113
www.stantec.com

CONCRETE CURB & GUTTER TRANSITION

CHASKA, MINNESOTA

LAST REVISION: OCT. 1989

PLATE NO. STR-10

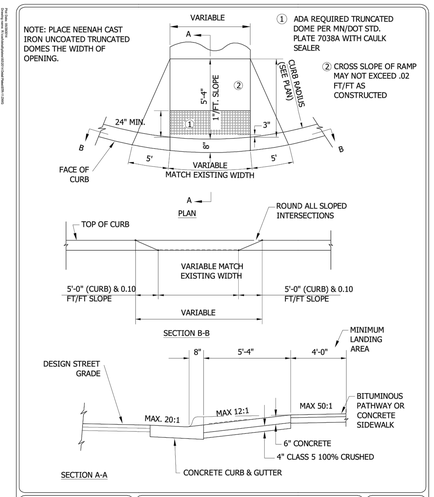

Stantec
3500 Highway 36 W
St. Paul, MN 55113
www.stantec.com

PEDESTRIAN CURB RAMP FOR PATHWAY/SIDEWALK

CHASKA, MINNESOTA

LAST REVISION: APRIL 2011

PLATE NO. STR-11

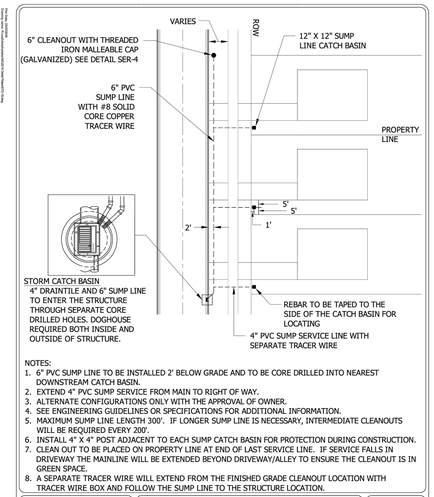

NOTES:
1. 6" PVC SUMP LINE TO BE INSTALLED 2' BELOW GRADE AND TO BE CORE DRILLED INTO NEAREST DOWNSTREAM CATCH BASIN.
2. EXTEND 4" PVC SUMP SERVICE FROM MAIN TO RIGHT OF WAY.
3. ALTERNATE CONFIGURATIONS ONLY WITH THE APPROVAL OF OWNER.
4. SEE ENGINEERING GUIDELINES OR SPECIFICATIONS FOR ADDITIONAL INFORMATION.
5. MAXIMUM SUMP LINE LENGTH 300'. IF LONGER SUMP LINE IS NECESSARY, INTERMEDIATE CLEANOUTS WILL BE REQUIRED EVERY 200'.
6. INSTALL 4" X 4" POST ADJACENT TO EACH SUMP CATCH BASIN FOR PROTECTION DURING CONSTRUCTION.
7. CLEAN OUT TO BE PLACED ON PROPERTY LINE AT END OF LAST SERVICE LINE. IF SERVICE FALLS IN DRIVEWAY THE MAINLINE WILL BE EXTENDED BEYOND DRIVEWAY/ALLEY TO ENSURE THE CLEANOUT IS IN GREEN SPACE.
8. A SEPARATE TRACER WIRE WILL EXTEND FROM THE FINISHED GRADE CLEANOUT LOCATION WITH TRACER WIRE BOX AND FOLLOW THE SUMP LINE TO THE STRUCTURE LOCATION.

Stantec
3500 Highway 36 W
St. Paul, MN 55113
www.stantec.com

PVC SUMP LINE BEHIND CURB

CHASKA, MINNESOTA

LAST REVISION: MAY 2016

PLATE NO. STO-15

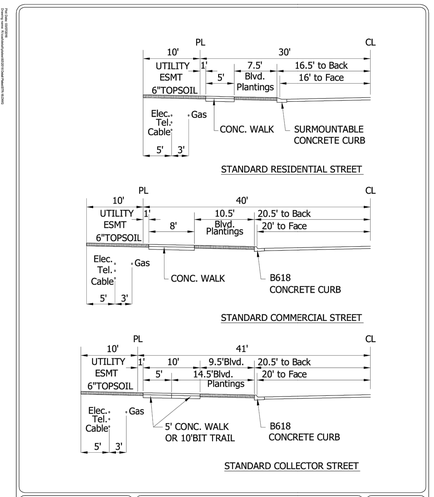

Stantec
3500 Highway 36 W
St. Paul, MN 55113
www.stantec.com

TYPICAL STREET COMPONENTS/DIMENSIONS RESIDENTIAL, COMMERCIAL & COLLECTOR
CHASKA, MINNESOTA

LAST REVISION: APRIL 2016

PLATE NO. STR-16

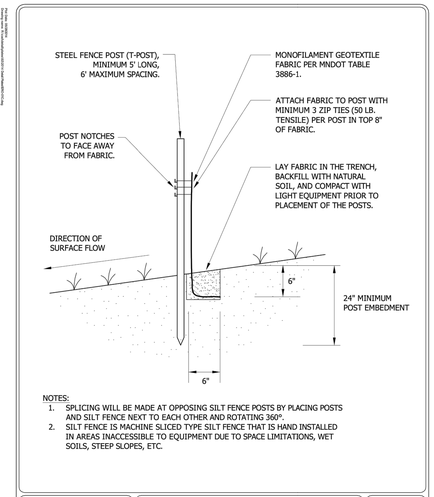

NOTES:
1. SPLICING WILL BE MADE AT OPPOSING SILT FENCE POSTS BY PLACING POSTS AND SILT FENCE NEXT TO EACH OTHER AND ROTATING 360°.
2. SILT FENCE IS MACHINE SLICED TYPE SILT FENCE THAT IS HAND INSTALLED IN AREAS INACCESSIBLE TO EQUIPMENT DUE TO SPACE LIMITATIONS, WET SOILS, STEEP SLOPES, ETC.

Stantec
3500 Highway 36 W
St. Paul, MN 55113
www.stantec.com

SILT FENCE STANDARD

CHASKA, MINNESOTA

LAST REVISION: APRIL 2008

PLATE NO. ERO-1C

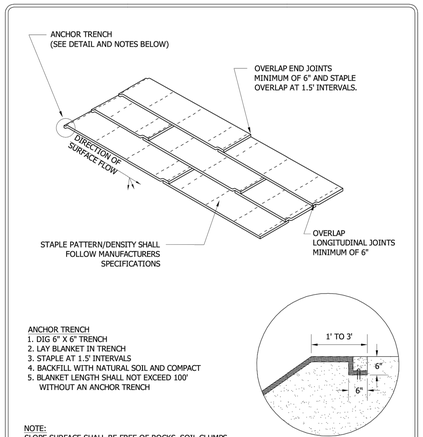

ANCHOR TRENCH
1. DIG 6" X 6" TRENCH
2. LAY BLANKET IN TRENCH
3. STAPLE AT 1.5' INTERVALS
4. BACKFILL WITH NATURAL SOIL AND COMPACT
5. BLANKET LENGTH SHALL NOT EXCEED 100' WITHOUT AN ANCHOR TRENCH

NOTE:
SLOPE SURFACE SHALL BE FREE OF ROCKS, SOIL CLUMPS, STICKS, VEHICLE IMPRINTS, AND GRASS. BLANKETS SHALL HAVE GOOD SOIL CONTACT.

Stantec
3500 Highway 36 W
St. Paul, MN 55113
www.stantec.com

EROSION CONTROL BLANKET INSTALLATION

CHASKA, MINNESOTA

LAST REVISION: APRIL 2008

PLATE NO. ERO-2

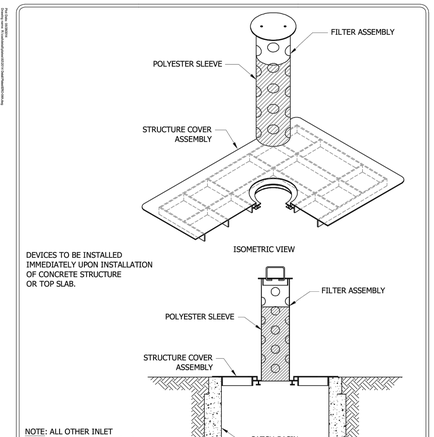

NOTE: ALL OTHER INLET PROTECTION DEVICES MUST BE APPROVED BY OWNER PRIOR TO INSTALLATION.

Stantec
3500 Highway 36 W
St. Paul, MN 55113
www.stantec.com

INLET PROTECTION FOR CATCH BASIN BEFORE CURB CONSTRUCTION

CHASKA, MINNESOTA

LAST REVISION: APRIL 2008

PLATE NO. ERO-4A

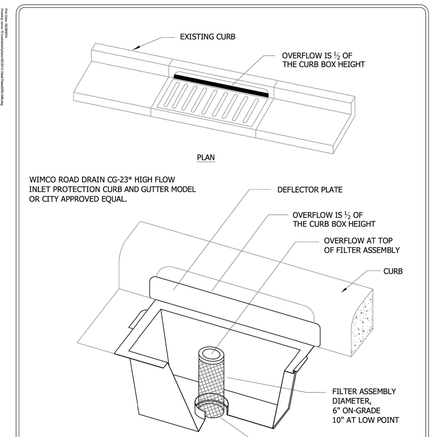

WIMCO ROAD DRAIN CG-23* HIGH FLOW INLET PROTECTION CURB AND GUTTER MODEL OR CITY APPROVED EQUAL.

* FOR THE NEW R-3290-VB STANDARD CASTING, INSTALL WIMCO ROAD DRAIN CG-3290 OR CITY APPROVED EQUAL.

Stantec
3500 Highway 36 W
St. Paul, MN 55113
www.stantec.com

INLET PROTECTION - CATCH BASIN INSERT AFTER CURB CONSTRUCTION

CHASKA, MINNESOTA

LAST REVISION: APRIL 2008

PLATE NO. ERO-4B

DEVICES TO BE INSTALLED IMMEDIATELY UPON INSTALLATION OF CONCRETE STRUCTURE CONE OR TOP SLAB.

DEVICES SHOWN ARE AS MANUFACTURED BY WIMCO. MODEL NO. OF UNIT SHOWN: RD 27.

OTHER APPROVED INLET PROTECTION DEVICES FOR BEEHIVE CASTINGS ARE:
- ROYAL ENTERPRISES - MODEL NO 27 INFRASAFE SEDIMENT CONTROL BARRIER - DG.
- PRE MANUFACTURED UNIT BY CIRCLE "H" ENTERPRISES.

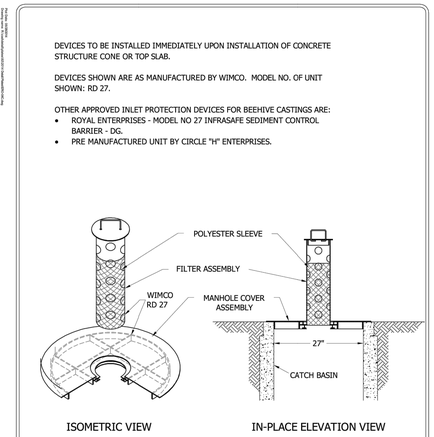

Stantec
3500 Highway 36 W
St. Paul, MN 55113
www.stantec.com

INLET PROTECTION BEEHIVE CASTING

CHASKA, MINNESOTA

LAST REVISION: APRIL 2008

PLATE NO. ERO-4C

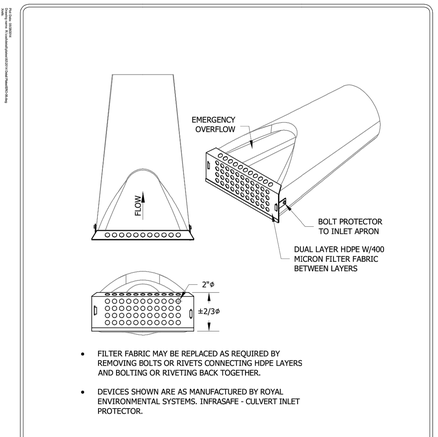

- FILTER FABRIC MAY BE REPLACED AS REQUIRED BY REMOVING BOLTS OR RIVETS CONNECTING HDPE LAYERS AND BOLTING OR RIVETING BACK TOGETHER.
- DEVICES SHOWN ARE AS MANUFACTURED BY ROYAL ENVIRONMENTAL SYSTEMS. INFRASAFE - CULVERT INLET PROTECTOR.

Stantec
3500 Highway 36 W
St. Paul, MN 55113
www.stantec.com

FLARED END EROSION CONTROL

CHASKA, MINNESOTA

LAST REVISION: FEB 2005

PLATE NO. ERO-6

N:\0027067.00\DWG\CIVIL\UTILITY\0027067S_-_DT01.DWG

RIVERTOWN HEIGHTS

DESIGNED: FDH II
CHECKED: JHB
DRAWN: CTY
HORIZONTAL SCALE: ###
VERTICAL SCALE: ### OR ##

INITIAL ISSUE: 04/29/22
REVISIONS:
1 05/25/22 REVISED FOR CITY COMMENTS
2 . .
3 . .
4 . .
5 . .

PREPARED FOR:

DR HORTON, INC. - MINNESOTA

20860 KENBRIDGE COURT, SUITE 100
LAKEVILLE, MINNESOTA 55044

I HEREBY CERTIFY THAT THIS PLAN WAS PREPARED BY ME OR UNDER MY DIRECT SUPERVISION AND THAT I AM A DULY LICENSED PROFESSIONAL ENGINEER UNDER THE LAWS OF THE STATE OF MINNESOTA

JOHN H. BENDER

DATE: 05/25/22 LICENSE NO. 43358

RIVERTOWN HEIGHTS

CHASKA, MN

Westwood

Phone (952) 937-5150 12701 Whitewater Drive, Suite #300
Fax (952) 937-5822 Minnetonka, MN 55343
Toll Free (888) 937-5150 westwoodps.com

Westwood Professional Services, Inc.

DETAILS

PROJECT NUMBER: 0027067.00

SHEET NUMBER: 18 OF 22

DATE: 05/25/22

© 2022 Westwood Professional Services, Inc.

Call 48 Hours before digging:
811 or call811.com
Common Ground Alliance

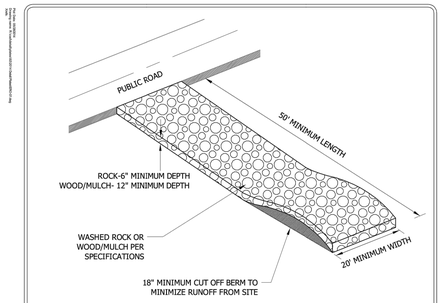

NOTES:
1. MnDOT 3733 TYPE 4 FILTER FABRIC SHALL BE PLACED UNDER ROCK OR MULCH TO STOP MUD MIGRATION THROUGH MATERIAL.
2. FUGITIVE ROCK OR MULCH WILL BE REMOVED FROM ADJACENT ROADWAYS DAILY OR MORE FREQUENTLY AS NECESSARY.
3. CONSTRUCTION ENTRANCE MUST BE CONSTRUCTED PRIOR TO THE COMMENCEMENT OF GRADING OPERATIONS ON THE SITE.
4. THE ENTRANCE MUST BE MAINTAINED IN PROPER CONDITION TO PREVENT TRACKING OF MUD OFF THE SITE. THIS MAY REQUIRE PERIODIC TOPDRESSING WITH ADDITIONAL ROCK, WOOD/MULCH, OR REMOVAL AND REINSTALLATION OF THE PAD.
5. THIS ENTRANCE WILL BE USED BY ALL VEHICLES ENTERING OR LEAVING THE PROJECT.
6. THE CONSTRUCTION ENTRANCE WILL BE REMOVED PRIOR TO THE PLACEMENT OF BITUMINOUS SURFACING.

Stantec
3535 Highway 36 W
St. Paul, MN 55113
www.stantec.com

ROCK CONSTRUCTION ENTRANCE

CHASKA, MINNESOTA

LAST REVISION: APRIL 2008

PLATE NO. ERO-7

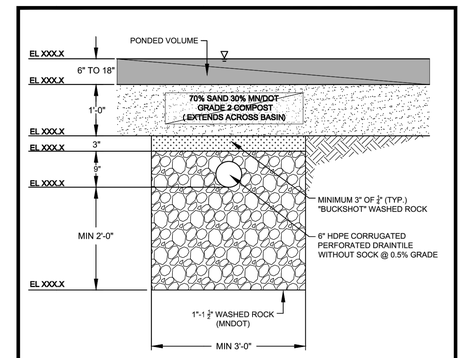

CALCULATIONS TO MEET RULES

VOLUME:
1. **VOLUME REDUCTION IS CALCULATED AS 40% OF PONDED VOLUME.**
2. **IF NO VEGETATION IS PROVIDED, THE VOLUME CALCULATION IS LOWERED TO 50% OF ROCK VOLUME BELOW TILE.**
3. **TILE INVERT MUST BE 3 FT ABOVE DOWNSTREAM NWL, GROUNDWATER, BEDROCK, ETC.**

WATER QUALITY:
1. **FILTRATION IS CALCULATED AS 75% TP REMOVAL AND 90% TSS REMOVAL.**

DRAWDOWN:
1. **48 HOUR DRAWDOWN OF BMPS IS REQUIRED. TO DETERMINE LENGTH OF TRENCH NEEDED, USE FILTRATION RATE OF 50 CF OF PONDED VOLUME WILL PASS THROUGH ONE LINEAR FOOT OF 3' WIDE TRENCH, OR 17 CF OF PONDED VOLUME PER SF OF SURFACE AREA.**

M:\1097\GENERAL_DETAILS\December 2016 Details\1 - BIORETENTION TRENCH.dwg

CARVER COUNTY

WENCK ASSOCIATES
Responsive partner. Exceptional outcomes.

BIORETENTION TRENCH

DEC 2016

DETAIL 1

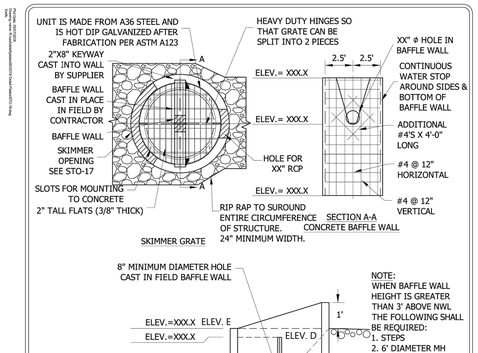

Stantec
3535 Highway 36 W
St. Paul, MN 55113
www.stantec.com

SKIMMER STRUCTURE WITH
CAST IN FIELD
CONCRETE BAFFLE WALL

CHASKA, MINNESOTA

LAST REVISION: MARCH 2018

PLATE NO. STO-18

STRUCTURE	POND	NWL	HWL	ELEV A (IE IN)	ELEV B (IE OUT)	ELEV C (OE)	ELEV D (TOP WALL)	ELEV E (RE LOW)	ELEV F (SUMP)	ORIFICE SIZE	OUTLET PIPE SIZE
OCS 1	FILT. BASIN 1	881.50	888.60	880.50	878.50	883.00	888.60	888.60	877.50	15"	15" RCP
OCS 2	FILT. BASIN 2	874.20	879.60	873.50	871.30	876.00	877.20	879.80	870.30	8"	30" RCP

N:\0027067.00\DWG\CIVIL\UTILITY\0027067S - DT01.DWG

RIVERTOWN HEIGHTS

DESIGNED: FDH II
CHECKED: JHB
DRAWN: CTY
HORIZONTAL SCALE: ###
VERTICAL SCALE: ### OR ##

INITIAL ISSUE: 04/29/22
REVISIONS:
1 05/25/22 REVISED FOR CITY COMMENTS
2 . .
3 . .
4 . .
5 . .

PREPARED FOR:

DR HORTON, INC. - MINNESOTA
20860 KENBRIDGE COURT, SUITE 100
LAKEVILLE, MINNESOTA 55044

I HEREBY CERTIFY THAT THIS PLAN WAS PREPARED BY ME OR UNDER MY DIRECT SUPERVISION AND THAT I AM A DULY LICENSED PROFESSIONAL ENGINEER UNDER THE LAWS OF THE STATE OF MINNESOTA
JOHN H. BENDER
DATE: 05/25/22 LICENSE NO. 43358

RIVERTOWN HEIGHTS
CHASKA, MN

Westwood
Phone (952) 937-5150 12701 Whitewater Drive, Suite #300
Fax (952) 937-5822 Minnetonka, MN 55343
Toll Free (888) 937-5150 westwoodps.com
Westwood Professional Services, Inc.

DETAILS

SHEET NUMBER: 19 OF 22

PROJECT NUMBER: 0027067.00

DATE: 05/25/22

© 2022 Westwood Professional Services, Inc.

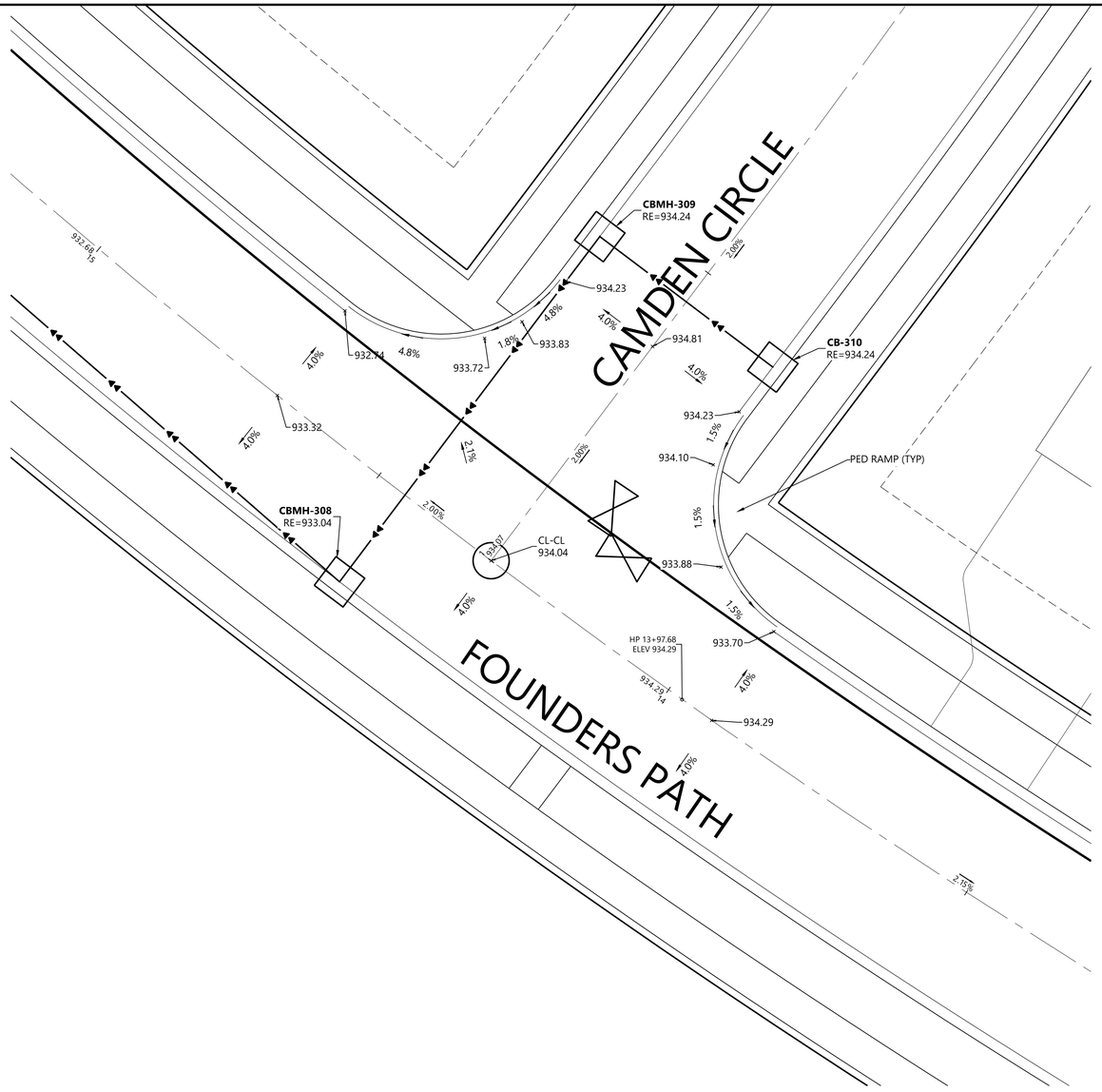

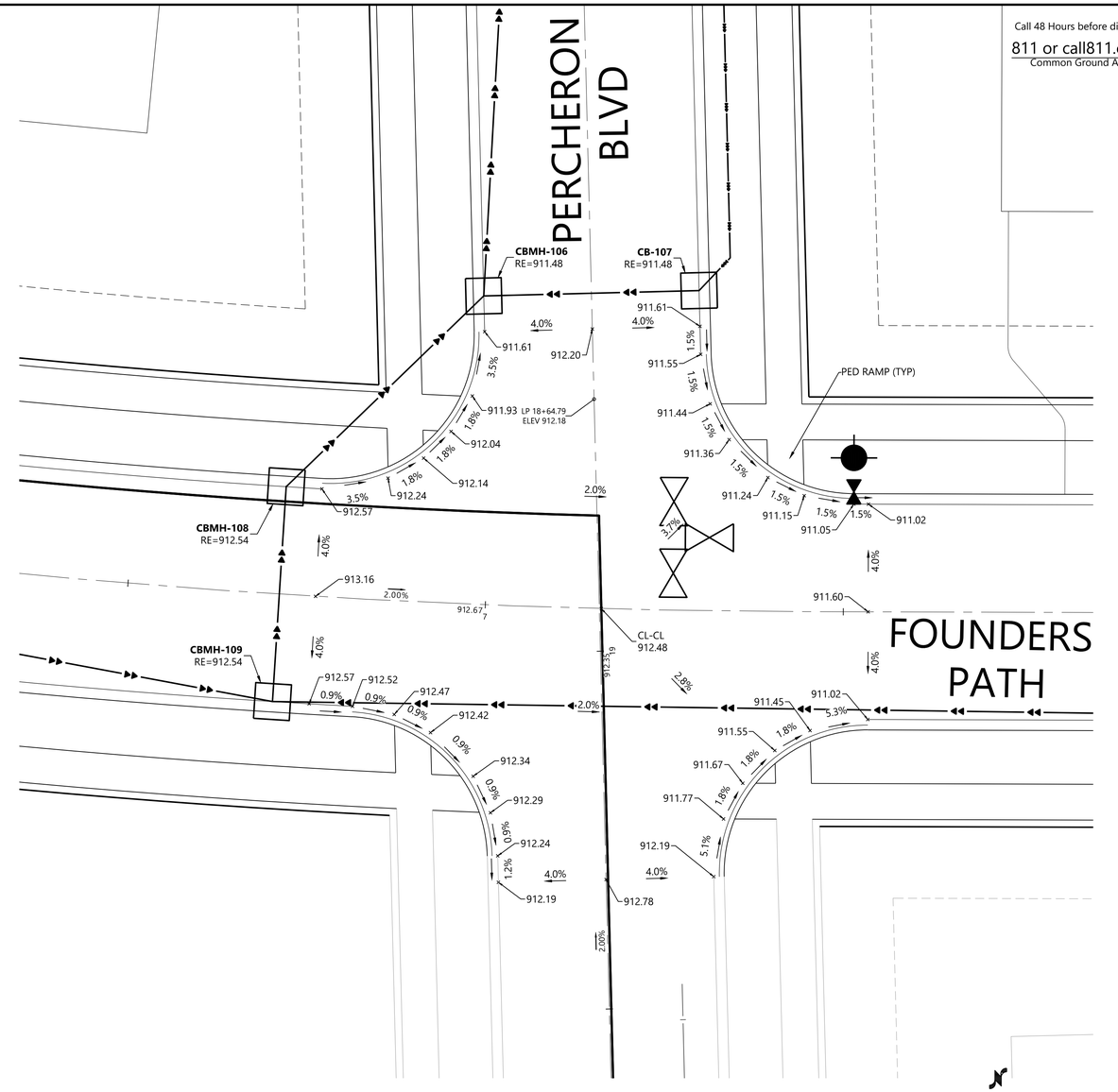

LEGEND

EXISTING	PROPOSED	
900.00	× 900.00	GUTTER ELEVATION
	× TC 900.00	TOP OF CURB ELEVATION
	0.00%	FLOW DIRECTION
		FLOW LINE
		BACK OF CURB
STG		STORM SEWER

GENERAL NOTES

1. RADIUS TO BE B618 CURB & GUTTER WITH 10' TRANSITIONS FROM SURMOUNTABLE CURB & GUTTER.
2. ALL RCP SHALL BE CLASS V, UNLESS OTHERWISE NOTED.
3. ALL CATCH BASIN CASTINGS IN CURB SHALL BE SUMPED 0.15 FEET. MANHOLE CASTINGS IN PAVED AREAS SHALL BE SUMPED 0.05 FEET. RIM ELEVATIONS SHOWN ON THE PROFILES REFLECT THE SUMPED ELEVATIONS.

Call 48 Hours before digging:
811 or call811.com
Common Ground Alliance

1" = 10'
0' 10' 20' 30'

CONSTRUCTION PLANS

N:\0027067.00\DWG\CIVIL\UTILITY\0027067S - IN01.DWG

RIVERTOWN HEIGHTS

DESIGNED: FDH II
CHECKED: JHB
DRAWN: CTY
HORIZONTAL SCALE: 10'
VERTICAL SCALE: 2' OR 1'

INITIAL ISSUE: 04/29/22
REVISIONS:
1 05/25/22 REVISED FOR CITY COMMENTS
2 . .
3 . .
4 . .
5 . .

PREPARED FOR:

DR HORTON, INC. - MINNESOTA

20860 KENBRIDGE COURT, SUITE 100
LAKEVILLE, MINNESOTA 55044

I HEREBY CERTIFY THAT THIS PLAN WAS PREPARED BY ME OR UNDER MY DIRECT SUPERVISION AND THAT I AM A DULY LICENSED PROFESSIONAL ENGINEER UNDER THE LAWS OF THE STATE OF MINNESOTA

JOHN H. BENDER
DATE: 05/25/22 LICENSE NO. 43358

RIVERTOWN HEIGHTS

CHASKA, MN

Westwood
Phone (952) 937-5150 12701 Whitewater Drive, Suite #300
Fax (952) 937-5822 Minnetonka, MN 55343
Toll Free (888) 937-5150 westwoodps.com
Westwood Professional Services, Inc.

INTERSECTION DETAILS

PROJECT NUMBER: 0027067.00

SHEET NUMBER: 20 OF 22
DATE: 05/25/22

© 2022 Westwood Professional Services, Inc.

Call 48 Hours before digging:
811 or call811.com
Common Ground Alliance

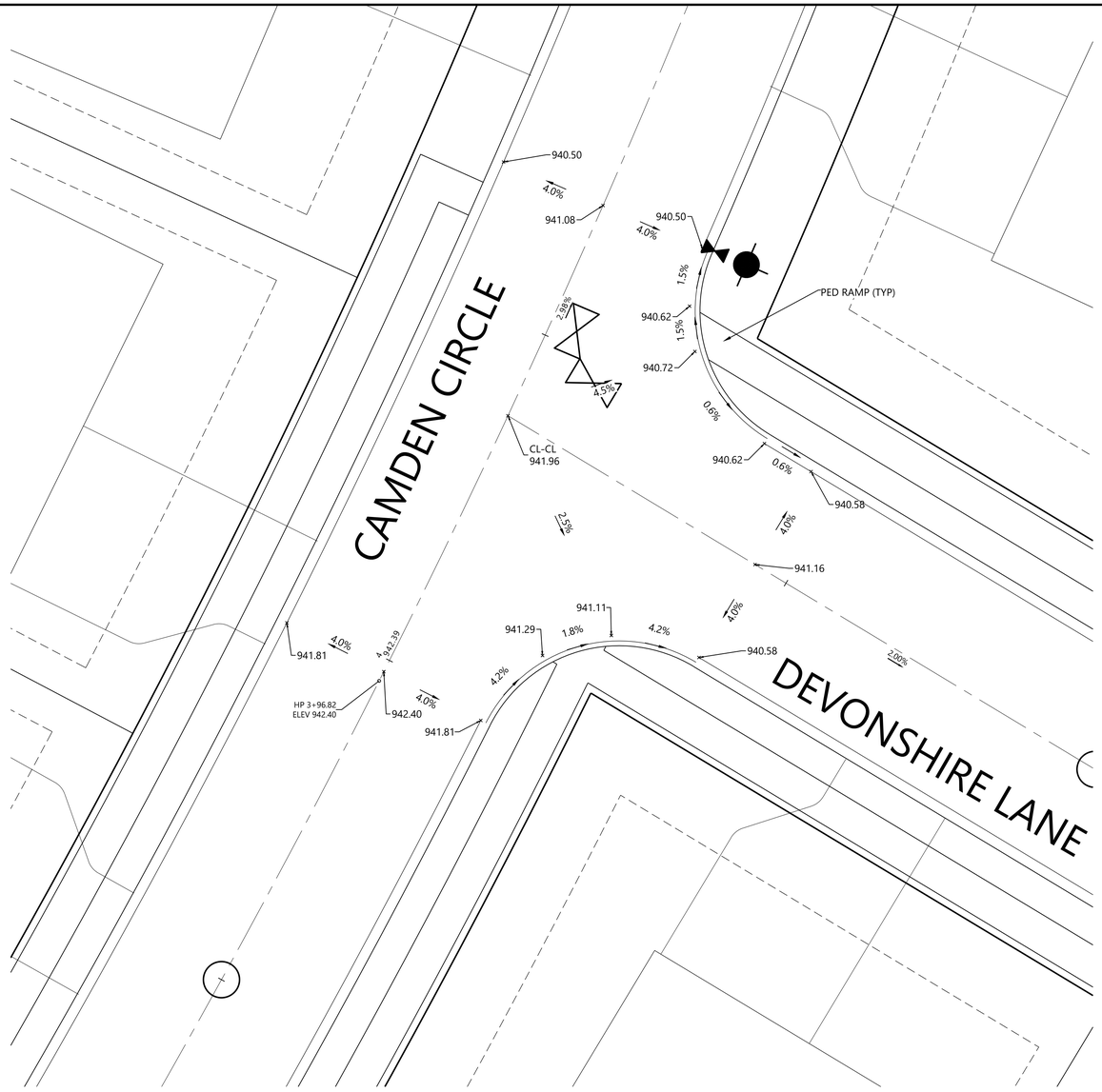

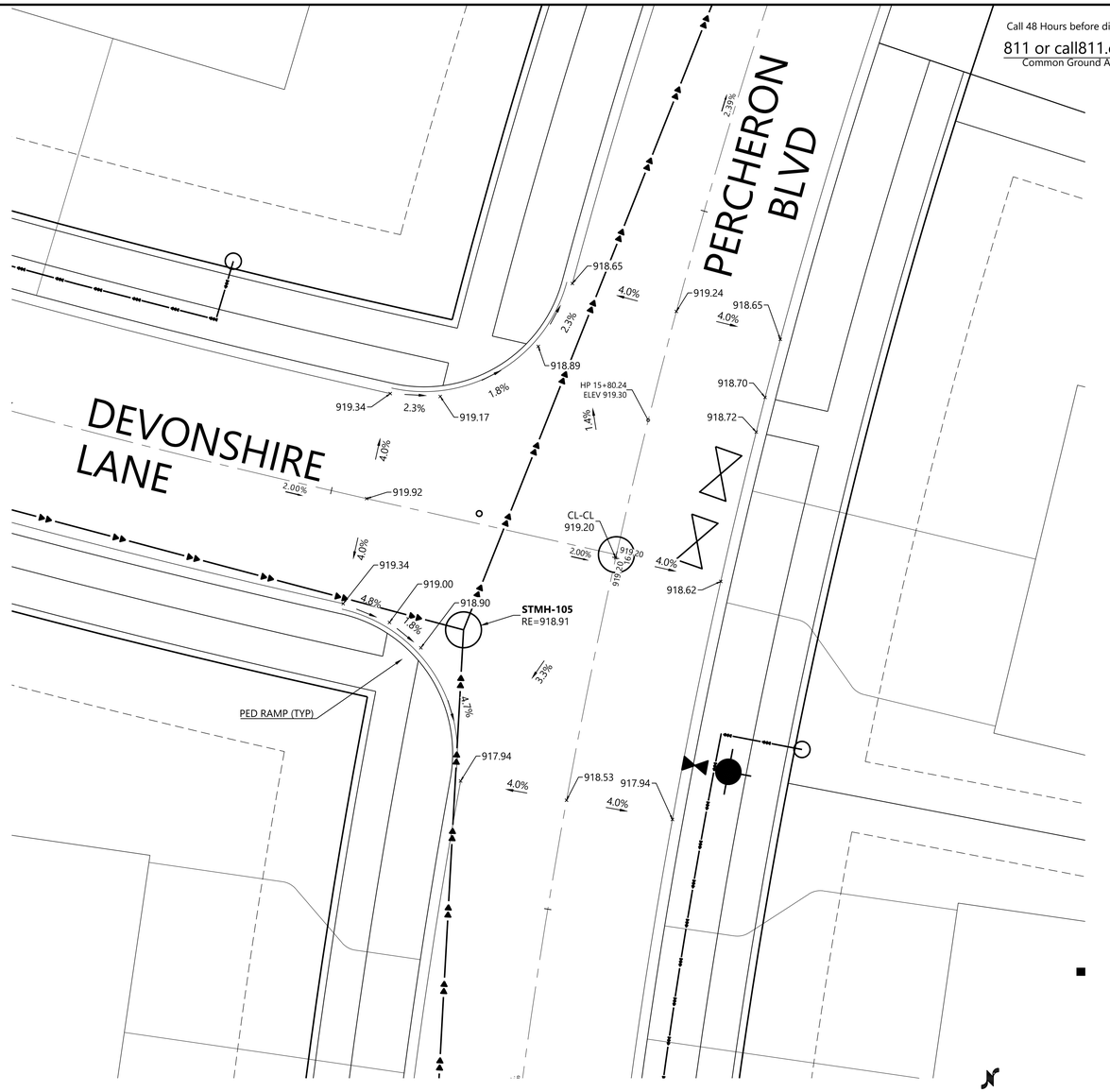

LEGEND

EXISTING	PROPOSED	
900.00	× 900.00	GUTTER ELEVATION
	× TC 900.00	TOP OF CURB ELEVATION
	0.00%	FLOW DIRECTION
		FLOW LINE
		BACK OF CURB
STD		STORM SEWER

GENERAL NOTES

1. RADIUS TO BE B618 CURB & GUTTER WITH 10' TRANSITIONS FROM SURMOUNTABLE CURB & GUTTER.
2. ALL RCP SHALL BE CLASS V, UNLESS OTHERWISE NOTED.
3. ALL CATCH BASIN CASTINGS IN CURB SHALL BE SUMPED 0.15 FEET. MANHOLE CASTINGS IN PAVED AREAS SHALL BE SUMPED 0.05 FEET. RIM ELEVATIONS SHOWN ON THE PROFILES REFLECT THE SUMPED ELEVATIONS.

1" = 10'

0' 10' 20' 30'

CONSTRUCTION PLANS

N:\0027067.00\DWG\CIVIL\UTILITY\0027067S - IN01.DWG

RIVERTOWN HEIGHTS

DESIGNED: FDH II
CHECKED: JHB
DRAWN: CTY
HORIZONTAL SCALE: ##########
VERTICAL SCALE: ## OR ##

INITIAL ISSUE: 04/29/22
REVISIONS:
1 05/25/22 REVISED FOR CITY COMMENTS
2 . .
3 . .
4 . .
5 . .

PREPARED FOR:

DR HORTON, INC. - MINNESOTA

20860 KENBRIDGE COURT, SUITE 100
LAKEVILLE, MINNESOTA 55044

I HEREBY CERTIFY THAT THIS PLAN WAS PREPARED BY ME OR UNDER MY DIRECT SUPERVISION AND THAT I AM A DULY LICENSED PROFESSIONAL ENGINEER UNDER THE LAWS OF THE STATE OF MINNESOTA

JOHN H. BENDER
DATE: 05/25/22 LICENSE NO. 43358

RIVERTOWN HEIGHTS

CHASKA, MN

Westwood

Phone (952) 937-5150 12701 Whitewater Drive, Suite #300
Fax (952) 937-5822 Minnetonka, MN 55343
Toll Free (888) 937-5150 westwoodps.com

Westwood Professional Services, Inc.

INTERSECTION DETAILS

SHEET NUMBER: 21 OF 22

PROJECT NUMBER: 0027067.00

DATE: 05/25/22

© 2022 Westwood Professional Services, Inc.

Call 48 Hours before digging:
811 or call811.com
Common Ground Alliance



LEGEND

EXISTING	PROPOSED	
900.00	× 900.00	GUTTER ELEVATION
	× TC 900.00	TOP OF CURB ELEVATION
	0.00%	FLOW DIRECTION
		FLOW LINE
		BACK OF CURB
STD		STORM SEWER

GENERAL NOTES

1. RADIUS TO BE B618 CURB & GUTTER WITH 10' TRANSITIONS FROM SURMOUNTABLE CURB & GUTTER.
2. ALL RCP SHALL BE CLASS V, UNLESS OTHERWISE NOTED.
3. ALL CATCH BASIN CASTINGS IN CURB SHALL BE SUMPED 0.15 FEET. MANHOLE CASTINGS IN PAVED AREAS SHALL BE SUMPED 0.05 FEET. RIM ELEVATIONS SHOWN ON THE PROFILES REFLECT THE SUMPED ELEVATIONS.

1" = ###

0' ### ### ###

CONSTRUCTION PLANS

N:\0027067.00\DWG\CIVIL\UTILITY\0027067S - IN01.DWG

RIVERTOWN HEIGHTS

DESIGNED: FDH II
CHECKED: JHB
DRAWN: CTY
HORIZONTAL SCALE: #########
VERTICAL SCALE: ## OR ##

INITIAL ISSUE: 04/29/22
REVISIONS:
1 05/25/22 REVISED FOR CITY COMMENTS
2 . .
3 . .
4 . .
5 . .

PREPARED FOR:

DR HORTON, INC. - MINNESOTA

20860 KENBRIDGE COURT, SUITE 100
LAKEVILLE, MINNESOTA 55044

I HEREBY CERTIFY THAT THIS PLAN WAS PREPARED BY ME OR UNDER MY DIRECT SUPERVISION AND THAT I AM A DULY LICENSED PROFESSIONAL ENGINEER UNDER THE LAWS OF THE STATE OF MINNESOTA

JOHN H. BENDER
DATE: 05/25/22 LICENSE NO. 43358

RIVERTOWN HEIGHTS

CHASKA, MN

Westwood

Phone (952) 937-5150 12701 Whitewater Drive, Suite #300
Fax (952) 937-5822 Minnetonka, MN 55343
Toll Free (888) 937-5150 westwoodps.com

Westwood Professional Services, Inc.

INTERSECTION DETAILS

SHEET NUMBER: 22 OF 22

PROJECT NUMBER: 0027067.00

DATE: 05/25/22

© 2021 Westwood Professional Services, Inc.

FINAL PLANS

FOR

LANDSCAPE PLANS

FOR

RIVERTOWN HEIGHTS

CHASKA, MN



Vicinity Map
(NOT TO SCALE)

PREPARED FOR:

DR HORTON, INC. - MINNESOTA

20860 KENBRIDGE COURT, SUITE 100
LAKEVILLE, MINNESOTA 55044
CONTACT: MIKE SUEL
PHONE: 952-985-7823
EMAIL: MSUEL@DRHORTON.COM

PREPARED BY:

Westwood

Phone (952) 937-5150
Fax (952) 937-5822
Toll Free (888) 937-5150
12701 Whitewater Drive, Suite #300
Minnetonka, MN 55343
westwoodps.com

Westwood Professional Services, Inc.

PROJECT NUMBER: 0027067.00
CONTACT: CORY MEYER

SHEET INDEX

Sheet List Table	
SHEET NUMBER	SHEET TITLE
1	COVER
2	OVERALL LANDSCAPE PLAN
3	LANDSCAPE PLAN
4	LANDSCAPE PLAN
5	LANDSCAPE PLAN
6	LANDSCAPE PLAN
7	LANDSCAPE NOTES & DETAILS

NO.	DATE	REVISION	SHEETS
	.	.	
	.	.	
	.	.	
	.	.	
	.	.	
	.	.	
	.	.	
	.	.	
	.	.	

FINAL PLANS
FOR

LANDSCAPE PLANS

FOR
RIVERTOWN HEIGHTS
CHASKA, MN

INITIAL SUBMITTAL DATE: 05/25/2022 SHEET: 1 OF 7

RIVERTOWN HEIGHTS

PROJECT NUMBER: 0027067.00

P:\0027067.00\DWG\CIVIL\FINAL\LANDSCAPE\0027067S-FCVP01.DWG

© 2021 Westwood Professional Services, Inc.

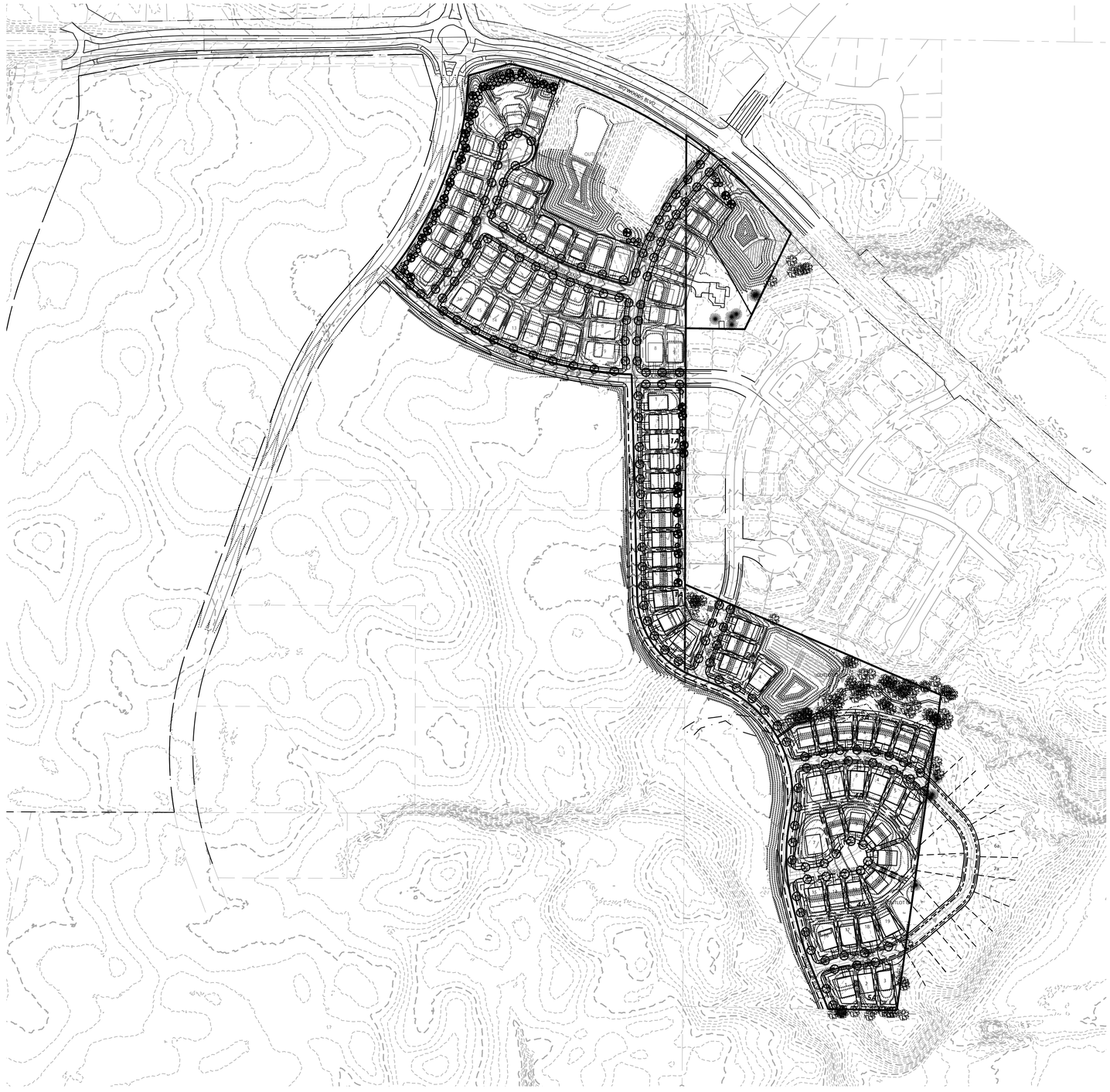

Call 48 Hours before digging:

811 or call811.com
Common Ground Alliance

PLANT SCHEDULE

SYMBOL	QTY.	COMMON/BOTANICAL NAME	SIZE	SPACING O.C.	SPACING O.C.
OVERSTORY DECIDUOUS TREES - 183					
SGM	19	Sienna Glen Maple / Acer x freemanii 'Sienna'	2.5" BB	AS SHOWN	H 40'-50' W 35'-40'
ABM	8	Autumn Blaze Maple / Acer x freemanii 'Jeffersred'	2.5" BB	AS SHOWN	H 50'-60' W 40'
FFM	22	Fall Fiesta Maple / Acer saccharum 'Bailsta'	2.5" BB	AS SHOWN	H 50'-75' W 50'
SKH	18	Skyline Honeylocust / Gleditsia tricanthos var. inermis 'Skycole'	2.5" BB	AS SHOWN	H 50' W 35'-40'
REO	32	Red Oak / Quercus rubra	2.5" BB	AS SHOWN	H 50'-70' W 40'-50'
SWO	21	Swamp White Oak / Quercus bicolor	2.5" BB	AS SHOWN	H 50'-60' W 40'
WHO	7	White Oak / Quercus alba	2.5" BB	AS SHOWN	H 50'-60' W 40'
ACE	22	Accolade Elm / Ulmus japonica x wilsoniana 'Morton'	2.5" BB	AS SHOWN	H 70' W 40'-50'
RVB	9	River Birch / Betula nigra	10' HT. BB CLUMP	AS SHOWN	H 50'-75' W 50'
HAK	19	Hackberry / Celtis occidentalis	2.5" BB	AS SHOWN	H 50'-75' W 50'
RML	6	Redmond Linden / Tilia americana 'Redmond'	2.5" BB	AS SHOWN	H 40'-60' W 30'
BUFFER EVERGREEN TREES - 65					
BHS	13	Black Hills Spruce / Picea glauca densata	6' HT., BB	AS SHOWN	H 30'-40' W 20'-30'
NOS	15	Norway Spruce / Picea abies	6' HT., BB	AS SHOWN	H 60'-80' W 25'-30'
COS	10	Colorado Spruce / Picea pungens	6' HT., BB	AS SHOWN	H 40'-60' W 15'-30'
WHP	15	White Pine / Pinus strobus	6' HT., BB	AS SHOWN	H 50'-80' W 30'-40'
NOP	6	Norway Pine / Pinus resinosa	6' HT., BB	AS SHOWN	H 60'-80' W 25'-30'
POP	6	Ponderosa Pine / Pinus ponderosa	6' HT., BB	AS SHOWN	H 60'-80' W 25'-30'
ORNAMENTAL TREES - 16					
TCH	4	Thornless Cockspur Hawthorn / Crataegus crusgalli 'Inermis'	2" BB	AS SHOWN	H 15'-20' W 15'-20'
SDC	5	Snowdrift Crab / Malus 'Snowdrift'	2" BB	AS SHOWN	H 20' W 20'
PFC	7	Prairifire Crab / Malus 'Prairifire'	2" BB	AS SHOWN	H 20' W 20'

NOTES: QUANTITIES ON PLAN SUPERSEDE LIST QUANTITIES IN THE EVENT OF A DISCREPANCY.

Single Family Landscape Requirements

SINGLE FAMILY RESIDENTIAL SUBDIVISION REQUIREMENTS: 199 TREES
- ONE OVERSTORY DECIDUOUS TREE PER EVERY FIFTY (50) FEET ALONG PUBLIC STREETS, ON EACH SIDE, MINIMUM 2 ½" CALIPER. THE TREES MAY BE DISTRIBUTED THROUGHOUT THE SUBDIVISION AND NEED NOT NECESSARILY BE SPACED FIFTY (50) FEET APART. (9,908 LINEAR FEET OF FRONTAGE)

Single Family Landscape Provisions

TOTAL SINGLE FAMILY LANDSCAPING PROVIDED:	264 TREES
* STREET TREES:	151 TREES
* BUFFER DECIDUOUS TREES:	32 TREES
* BUFFER EVERGREEN TREES:	65 TREES
* BUFFER ORNAMENTAL TREES:	16 TREES

NOTES:

1. TIMING OF PLANT INSTALLATION WILL BE DEPENDENT UPON SEASON AND PLANT AVAILABILITY.
2. ACTUAL LOCATION OF PLANT MATERIAL IS SUBJECT TO FIELD AND SITE CONDITIONS.
3. NO PLANTING WILL BE INSTALLED UNTIL ALL GRADING AND CONSTRUCTION HAS BEEN COMPLETED IN THE IMMEDIATE AREA.
4. ALL STREET TREES SHALL BE INSTALLED IN FRONT OF INDIVIDUAL SINGLE FAMILY LOTS 2.5' FROM BACK OF CURB AND IN FRONT OF SIDEWALK IN THE BOULEVARD. STREET TREES SHALL BE PLANTED IN A LOCATION THAT DOES NOT INTERFERE WITH CURBSTOPS, INDIVIDUAL SEWER & WATER CONNECTIONS, OR DRIVEWAY LOCATIONS.

Native Seeding Legend

- WET MEADOWS S & W SEED MIX (34-271) TOTAL AREA (0.5 AC)
- STORMWATER NATIVE SEED MIX (33-261) TOTAL AREA (1.3 AC)
- MESIC PRAIRIE GENERAL SEED MIX (35-241) TOTAL AREA (2.0 AC)
- GENERAL ROADSIDE SEED MIX (25-141) TOTAL AREA (2.0 AC)

* ALL DISTURBED AREAS TO BE SODDED UNLESS NOTED OTHERWISE

* DISTURBANCE IN COUNTY R.O.W. SHOULD BE RESEEDED WITH LOW MAINTENANCE TURF.

Plant Legend

- OVERSTORY DECIDUOUS STREET TREE
- LARGE OVERSTORY DECIDUOUS TREE
- OVERSTORY BUFFER EVERGREEN TREE
- SMALL OVERSTORY TREE

1" = 200'

0' 200' 400' 600'

CONSTRUCTION DOCUMENTS

RIVERTOWN HEIGHTS

N:\0027067.00\DWG\CIVIL\FINAL\LANDSCAPE\0027067S-FLP01.DWG

DESIGNED: FDH II
CHECKED: FDH II
DRAWN: ACB
HORIZONTAL SCALE: 200'
VERTICAL SCALE: 40' OR 20'

INITIAL ISSUE: 05/25/2022
REVISIONS:

PREPARED FOR:

DR HORTON, INC. - MINNESOTA
20860 KENBRIDGE COURT, SUITE 100
LAKEVILLE, MINNESOTA 55044

I HEREBY CERTIFY THAT THIS PLAN WAS PREPARED BY ME OR UNDER MY DIRECT SUPERVISION AND THAT I AM A DULY LICENSED LANDSCAPE ARCHITECT UNDER THE LAWS OF THE STATE OF MINNESOTA

CORY MEYER
DATE: 05/25/2022 LICENSE NO. 26971

RIVERTOWN HEIGHTS
CHASKA, MN

Westwood
Phone (952) 937-5150 12701 Whitewater Drive, Suite #300
Fax (952) 937-5822 Minnetonka, MN 55343
Toll Free (888) 937-5150 westwoodps.com
Westwood Professional Services, Inc.

OVERALL LANDSCAPE PLAN

SHEET NUMBER: 2 OF 7

PROJECT NUMBER: 0027067.00

DATE: 05/25/2022

© 2021 Westwood Professional Services, Inc.

Call 48 Hours before digging:
811 or call811.com
Common Ground Alliance

1" = 50'
0' 50' 100' 150'

CONSTRUCTION DOCUMENTS



N:\0027067.00\DWG\CIVIL\FINAL\LANDSCAPE\0027067S-FLP01.DWG

RIVERTOWN HEIGHTS

DESIGNED:	FDH II
CHECKED:	FDH II
DRAWN:	ACB
HORIZONTAL SCALE:	50.000001'
VERTICAL SCALE:	10' OR 5'

INITIAL ISSUE: 05/25/2022
REVISIONS:

PREPARED FOR:

DR HORTON, INC. - MINNESOTA
20860 KENBRIDGE COURT, SUITE 100
LAKEVILLE, MINNESOTA 55044

I HEREBY CERTIFY THAT THIS PLAN WAS PREPARED BY ME OR UNDER MY DIRECT SUPERVISION AND THAT I AM A DULY LICENSED LANDSCAPE ARCHITECT UNDER THE LAWS OF THE STATE OF MINNESOTA

CORY MEYER
DATE: 05/25/2022 LICENSE NO. 26971

RIVERTOWN HEIGHTS
CHASKA, MN

Westwood
Phone (952) 937-5150 12701 Whitewater Drive, Suite #300
Fax (952) 937-5822 Minnetonka, MN 55343
Toll Free (888) 937-5150 westwoodps.com
Westwood Professional Services, Inc.

LANDSCAPE PLAN

SHEET NUMBER: 3 OF 7

PROJECT NUMBER: 0027067.00

DATE: 05/25/2022

© 2021 Westwood Professional Services, Inc.

Call 48 Hours before digging:
811 or call811.com
Common Ground Alliance

1" = 50'
0' 50' 100' 150'

CONSTRUCTION DOCUMENTS



RIVERTOWN HEIGHTS

N:\0027067.00\DWG\CIVIL\FINAL\LANDSCAPE\0027067S-FLP01.DWG

DESIGNED:	FDH II
CHECKED:	FDH II
DRAWN:	ACB
HORIZONTAL SCALE:	50.000001'
VERTICAL SCALE:	10' OR 5'

INITIAL ISSUE: 05/25/2022
REVISIONS:
1 . .
2 . .
3 . .
4 . .

PREPARED FOR:

DR HORTON, INC. - MINNESOTA
20860 KENBRIDGE COURT, SUITE 100
LAKEVILLE, MINNESOTA 55044

I HEREBY CERTIFY THAT THIS PLAN WAS PREPARED BY ME OR UNDER MY DIRECT SUPERVISION AND THAT I AM A DULY LICENSED LANDSCAPE ARCHITECT UNDER THE LAWS OF THE STATE OF MINNESOTA.

CORY MEYER
DATE: 05/25/2022 LICENSE NO. 26971

RIVERTOWN HEIGHTS
CHASKA, MN

Westwood
Phone (952) 937-5150 12701 Whitewater Drive, Suite #300
Fax (952) 937-5822 Minnetonka, MN 55343
Toll Free (888) 937-5150 westwoodps.com
Westwood Professional Services, Inc.

LANDSCAPE PLAN

SHEET NUMBER: 4 OF 7
DATE: 05/25/2022
PROJECT NUMBER: 0027067.00

© 2021 Westwood Professional Services, Inc.

Call 48 Hours before digging:
811 or call811.com
Common Ground Alliance

1" = 50'
0' 50' 100' 150'

CONSTRUCTION DOCUMENTS



N:\0027067.00\DWG\CIVIL\FINAL\LANDSCAPE\0027067S-FLP01.DWG

RIVERTOWN HEIGHTS

DESIGNED:	FDH II
CHECKED:	FDH II
DRAWN:	ACB
HORIZONTAL SCALE:	50.000002'
VERTICAL SCALE:	10' OR 5'

INITIAL ISSUE: 05/25/2022
REVISIONS:

PREPARED FOR:

DR HORTON, INC. - MINNESOTA
20860 KENBRIDGE COURT, SUITE 100
LAKEVILLE, MINNESOTA 55044

I HEREBY CERTIFY THAT THIS PLAN WAS PREPARED BY ME OR UNDER MY DIRECT SUPERVISION AND THAT I AM A DULY LICENSED LANDSCAPE ARCHITECT UNDER THE LAWS OF THE STATE OF MINNESOTA

CORY MEYER
DATE: 05/25/2022 LICENSE NO. 26971

RIVERTOWN HEIGHTS
CHASKA, MN

Westwood
Phone (952) 937-5150 12701 Whitewater Drive, Suite #300
Fax (952) 937-5822 Minnetonka, MN 55343
Toll Free (888) 937-5150 westwoodps.com
Westwood Professional Services, Inc.

LANDSCAPE PLAN

SHEET NUMBER: 5 OF 7
PROJECT NUMBER: 0027067.00
DATE: 05/25/2022

© 2021 Westwood Professional Services, Inc.

Call 48 Hours before digging:
811 or call811.com
Common Ground Alliance

1" = 50'
0' 50' 100' 150'

CONSTRUCTION DOCUMENTS



N:\0027067.00\DWG\CIVIL\FINALLANDSCAPE\0027067S-FLP01.DWG

RIVERTOWN HEIGHTS

DESIGNED:	FDH II
CHECKED:	FDH II
DRAWN:	ACB
HORIZONTAL SCALE:	50.000001'
VERTICAL SCALE:	10' OR 5'

INITIAL ISSUE: 05/25/2022
REVISIONS:
1 .
2 .
3 . .
4 . .
5 . .

PREPARED FOR:

DR HORTON, INC. - MINNESOTA
20860 KENBRIDGE COURT, SUITE 100
LAKEVILLE, MINNESOTA 55044

I HEREBY CERTIFY THAT THIS PLAN WAS PREPARED BY ME OR UNDER MY DIRECT SUPERVISION AND THAT I AM A DULY LICENSED LANDSCAPE ARCHITECT UNDER THE LAWS OF THE STATE OF MINNESOTA

CORY MEYER
DATE: 05/25/2022 LICENSE NO. 26971

RIVERTOWN HEIGHTS
CHASKA, MN

Westwood
Phone (952) 937-5150 12701 Whitewater Drive, Suite #300
Fax (952) 937-5822 Minnetonka, MN 55343
Toll Free (888) 937-5150 westwoodps.com
Westwood Professional Services, Inc.

LANDSCAPE PLAN

PROJECT NUMBER: 0027067.00

SHEET NUMBER: 6 OF 7
DATE: 05/25/2022

© 2021 Westwood Professional Services, Inc.

Call 48 Hours before digging:
811 or call811.com
Common Ground Alliance

Planting Notes

1. CONTRACTOR SHALL CONTACT COMMON GROUND ALLIANCE AT 811 OR CALL811.COM TO VERIFY LOCATIONS OF ALL UNDERGROUND UTILITIES PRIOR TO INSTALLATION OF ANY PLANTS OR LANDSCAPE MATERIAL.
2. ACTUAL LOCATION OF PLANT MATERIAL IS SUBJECT TO FIELD AND SITE CONDITIONS.
3. NO PLANTING WILL BE INSTALLED UNTIL ALL GRADING AND CONSTRUCTION HAS BEEN COMPLETED IN THE IMMEDIATE AREA.
4. ALL SUBSTITUTIONS MUST BE APPROVED BY THE LANDSCAPE ARCHITECT PRIOR TO SUBMISSION OF ANY BID AND/OR QUOTE BY THE LANDSCAPE CONTRACTOR.
5. CONTRACTOR SHALL PROVIDE TWO YEAR GUARANTEE OF ALL PLANT MATERIALS. THE GUARANTEE BEGINS ON THE DATE OF THE LANDSCAPE ARCHITECT'S OR OWNER'S WRITTEN ACCEPTANCE OF THE INITIAL PLANTING. REPLACEMENT PLANT MATERIAL SHALL HAVE A ONE YEAR GUARANTEE COMMENCING UPON PLANTING.
6. ALL PLANTS TO BE SPECIMEN GRADE, MINNESOTA-GROWN AND/OR HARDY. SPECIMEN GRADE SHALL ADHERE TO, BUT IS NOT LIMITED BY, THE FOLLOWING STANDARDS:
   ALL PLANTS SHALL BE FREE FROM DISEASE, PESTS, WOUNDS, SCARS, ETC.
   ALL PLANTS SHALL BE FREE FROM NOTICEABLE GAPS, HOLES, OR DEFORMITIES.
   ALL PLANTS SHALL BE FREE FROM BROKEN OR DEAD BRANCHES.
   ALL PLANTS SHALL HAVE HEAVY, HEALTHY BRANCHING AND LEAFING.
   CONIFEROUS TREES SHALL HAVE AN ESTABLISHED MAIN LEADER AND A HEIGHT TO WIDTH RATIO OF NO LESS THAN 5:3.
7. PLANTS TO MEET AMERICAN STANDARD FOR NURSERY STOCK (ANSI Z60.1-2014 OR MOST CURRENT VERSION) REQUIREMENTS FOR SIZE AND TYPE SPECIFIED.
8. PLANTS TO BE INSTALLED AS PER MNLA & ANSI STANDARD PLANTING PRACTICES.
9. PLANTS SHALL BE IMMEDIATELY PLANTED UPON ARRIVAL AT SITE. PROPERLY HEEL-IN MATERIALS IF NECESSARY; TEMPORARY ONLY.
10. PRIOR TO PLANTING, FIELD VERIFY THAT THE ROOT COLLAR/ROOT FLAIR IS LOCATED AT THE TOP OF THE BALLED & BURLAP TREE. IF THIS IS NOT THE CASE, SOIL SHALL BE REMOVED DOWN TO THE ROOT COLLAR/ROOT FLAIR, WHEN THE BALLED & BURLAP TREE IS PLANTED, THE ROOT COLLAR/ROOT FLAIR SHALL BE EVEN OR SLIGHTLY ABOVE FINISHED GRADE.
11. OPEN TOP OF BURLAP ON BB MATERIALS; REMOVE POT ON POTTED PLANTS; SPLIT AND BREAK APART PEAT POTS.
12. PRUNE PLANTS AS NECESSARY - PER STANDARD NURSERY PRACTICE AND TO CORRECT POOR BRANCHING OF EXISTING AND PROPOSED TREES.
13. WRAP ALL SMOOTH-BARKED TREES - FASTEN TOP AND BOTTOM. REMOVE BY APRIL 1ST.
14. STAKING OF TREES AS REQUIRED; REPOSITION, PLUMB AND STAKE IF NOT PLUMB AFTER ONE YEAR.
15. THE NEED FOR SOIL AMENDMENTS SHALL BE DETERMINED UPON SITE SOIL CONDITIONS PRIOR TO PLANTING. LANDSCAPE CONTRACTOR SHALL NOTIFY LANDSCAPE ARCHITECT FOR THE NEED OF ANY SOIL AMENDMENTS.
16. BACKFILL SOIL AND TOPSOIL TO ADHERE TO MN/DOT STANDARD SPECIFICATION 3877 (SELECT TOPSOIL BORROW) AND TO BE EXISTING TOP SOIL FROM SITE FREE OF ROOTS, ROCKS LARGER THAN ONE INCH, SUBSOIL DEBRIS, AND LARGE WEEDS UNLESS SPECIFIED OTHERWISE. MINIMUM 4" DEPTH TOPSOIL FOR ALL LAWN GRASS AREAS AND 12" DEPTH TOPSOIL FOR TREE, SHRUBS, AND PERENNIALS.
17. MULCH TO BE AT ALL TREE, SHRUB, PERENNIAL, AND MAINTENANCE AREAS. TREE AND SHRUB PLANTING BEDS SHALL HAVE 4" DEPTH OF SHREDDED HARDWOOD MULCH. SHREDDED HARDWOOD MULCH TO BE USED AROUND ALL PLANTS WITHIN TURF AREAS. PERENNIAL AND ORNAMENTAL GRASS BEDS SHALL HAVE 2" DEPTH SHREDDED HARDWOOD MULCH. MULCH TO BE FREE OF DELETERIOUS MATERIAL AND COLORED RED, OR APPROVED EQUAL. ROCK MULCH TO BE BUFF LIMESTONE, 1 1/2" TO 3" DIAMETER, AT MINIMUM 3" DEPTH, OR APPROVED EQUAL. ROCK MULCH TO BE ON COMMERCIAL GRADE FILTER FABRIC, BY TYPAR, OR APPROVED EQUAL WITH NO EXPOSURE. MULCH AND FABRIC TO BE APPROVED BY OWNER PRIOR TO INSTALLATION. MULCH TO MATCH EXISTING CONDITIONS (WHERE APPLICABLE).
18. EDGING TO BE COMMERCIAL GRADE VALLEY-VIEW BLACK DIAMOND (OR EQUAL) POLY EDGING OR SPADED EDGE, AS INDICATED. POLY EDGING SHALL BE PLACED WITH SMOOTH CURVES AND STAKED WITH METAL SPIKES NO GREATER THAN 4 FOOT ON CENTER WITH BASE OF TOP BEAD AT GRADE, FOR MOWERS TO CUT ABOVE WITHOUT DAMAGE. UTILIZE CURBS AND SIDEWALKS FOR EDGING WHERE POSSIBLE. SPADED EDGE TO PROVIDE V-SHAPED DEPTH AND WIDTH TO CREATE SEPARATION BETWEEN MULCH AND GRASS. INDIVIDUAL TREE, SHRUB, OR RAIN-GARDEN BEDS TO BE SPADED EDGE, UNLESS NOTED OTHERWISE. EDGING TO MATCH EXISTING CONDITIONS (WHERE APPLICABLE).
19. ALL DISTURBED AREAS TO BE SODDED OR SEEDED, UNLESS OTHERWISE NOTED. PARKING LOT ISLANDS TO BE SODDED WITH SHREDDED HARDWOOD MULCH AROUND ALL TREES AND SHRUBS. SOD TO BE STANDARD MINNESOTA GROWN AND HARDY BLUEGRASS MIX, FREE OF LAWN WEEDS. ALL TOPSOIL AREAS TO BE RAKED TO REMOVE DEBRIS AND ENSURE DRAINAGE. SLOPES OF 3:1 OR GREATER SHALL BE STAKED. SEED AS SPECIFIED AND PER MN/DOT SPECIFICATIONS. IF NOT INDICATED ON LANDSCAPE PLAN, SEE EROSION CONTROL PLAN.
20. PROVIDE IRRIGATION TO ALL PLANTED AREAS ON SITE. IRRIGATION SYSTEM TO BE DESIGN/BUILD BY LANDSCAPE CONTRACTOR. LANDSCAPE CONTRACTOR TO PROVIDE SHOP DRAWINGS TO LANDSCAPE ARCHITECT FOR APPROVAL PRIOR TO INSTALLATION OF IRRIGATION SYSTEM. CONTRACTOR TO PROVIDE OPERATION MANUALS, AS-BUILT PLANS, AND NORMAL PROGRAMMING. SYSTEM SHALL BE WINTERIZED AND HAVE SPRING STARTUP DURING FIRST YEAR OF OPERATION. SYSTEM SHALL HAVE ONE-YEAR WARRANTY ON ALL PARTS AND LABOR. ALL INFORMATION ABOUT INSTALLATION AND SCHEDULING CAN BE OBTAINED FROM THE GENERAL CONTRACTOR.
21. CONTRACTOR SHALL PROVIDE NECESSARY WATERING OF PLANT MATERIALS UNTIL THE PLANT IS FULLY ESTABLISHED OR IRRIGATION SYSTEM IS OPERATIONAL. OWNER WILL NOT PROVIDE WATER FOR CONTRACTOR.
22. REPAIR, REPLACE, OR PROVIDE SOD/SEED AS REQUIRED FOR ANY ROADWAY BOULEVARD AREAS ADJACENT TO THE SITE DISTURBED DURING CONSTRUCTION.
23. REPAIR ALL DAMAGE TO PROPERTY FROM PLANTING OPERATIONS AT NO COST TO OWNER.
24. RAIN GARDEN NOTE: PROVIDE AND INSTALL EROSION CONTROL BLANKET AT RAIN GARDEN AREA SIDE SLOPES AFTER ALL PLANTING HAVE BEEN INSTALLED. BLANKET TO BE ONE SEASON GEOJUTE, MN/DOT CATEGORY 2 (STRAW 1S, WOOD FIBER 1S), OR APPROVED EQUAL. BLANKET TO BE OVERLAPPED BY 4" AND ANCHORED BY SOD STAPLES. PLACE BLANKET PERPENDICULAR TO THE SLOPE. TRENCH IN EDGES OF BLANKET AREA TO PREVENT UNDER MINING. PROVIDE SILT FENCE AT TOP OF SLOPE AS NEEDED. SHREDDED HARDWOOD MULCH TO MATCH OTHER PROJECT PLANTING MULCH. PLACE 4" DEPTH OF MULCH AT ALL PLANTING AND EROSION CONTROL BLANKET AREA (NO FILTER FABRIC). SEE RAIN GARDEN DETAIL FOR FURTHER INFORMATION. RAIN GARDEN TO PROVIDE PROPER INFILTRATION AND DRAINAGE REQUIREMENTS PER ENGINEERS APPROVAL.

Landscape Planting Details

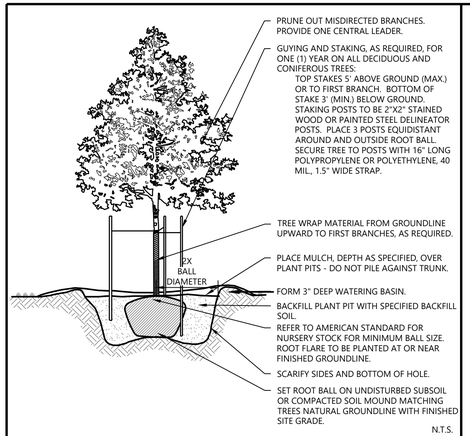

N.T.S.

Westwood	DECIDUOUS TREE PLANTING	LAST REVISED: 10/19/18
		LA28

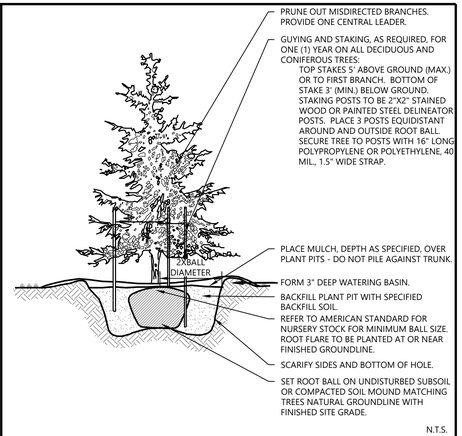

N.T.S.

Westwood	EVERGREEN TREE PLANTING	LAST REVISED: 10/19/18
		LA29

N:\0027067.00\DWG\CIVIL\FINAL\LANDSCAPE\0027067S-FLP01.DWG

RIVERTOWN HEIGHTS

CONSTRUCTION DOCUMENTS

DESIGNED:	FDH II
CHECKED:	FDH II
DRAWN:	ACB
HORIZONTAL SCALE:	##########
VERTICAL SCALE:	### OR ##

INITIAL ISSUE: 05/25/2022
REVISIONS:
1 . .
2 . .
3 . .
4 . .

PREPARED FOR:

DR HORTON, INC. - MINNESOTA
20860 KENBRIDGE COURT, SUITE 100
LAKEVILLE, MINNESOTA 55044

I HEREBY CERTIFY THAT THIS PLAN WAS PREPARED BY ME OR UNDER MY DIRECT SUPERVISION AND THAT I AM A DULY LICENSED LANDSCAPE ARCHITECT UNDER THE LAWS OF THE STATE OF MINNESOTA

CORY MEYER
DATE: 05/25/2022 LICENSE NO. 26971

RIVERTOWN HEIGHTS
CHASKA, MN

Westwood
Phone (952) 937-5150 12701 Whitewater Drive, Suite #300
Fax (952) 937-5822 Minnetonka, MN 55343
Toll Free (888) 937-5150 westwoodps.com
Westwood Professional Services, Inc.

LANDSCAPE NOTES & DETAILS

PROJECT NUMBER: 0027067.00

SHEET NUMBER: 7 OF 7

DATE: 05/25/2022

REQUEST FOR ACTION
CHASKA PLANNING COMMISSION
06/08/2022

Subject: Oak Ridge – Final Site & Building Plan and Final Plat

Applicant: RCS-RCA Oak Ridge LLC

Location: 1 Oak Ridge Drive; west of Highway 41, North of Twin Cities & Western Railroad

Case No.: 2022-36

Synopsis: Applicant seeks to obtain approval of a final site & building plan and final plat for the preservation of the Oak Ridge Conference Center, multi-family residential, and a Costco on 67 acres on the Oak Ridge property

Prepared By: Elizabeth Hanson

Staff Recommendation: Motion to recommend approval

BACKGROUND

In December 1987 the Concept Plan, Rezoning, Preliminary Plat and Final Plat for the IDS Learning Center facility was approved. This approval showed the construction of a learning center building totaling approximately 170,000 square feet in floor area, with a total build-out of 199,000 square feet. The building has ultimately shifted from the IDS Learning Center to its current use as the Oak Ridge Hotel and Conference Center. The area surrounding the conference center has remained undeveloped for years.

The Concept Plan for Oak Ridge was approved in March 2020. At this time the concept plan proposed the preservation of the conference center, a new multi-family apartment on the northwest portion of the site, a new senior housing campus on the south portion of the site, and a new commercial building on the east side of the site.

In May of 2020, an Environment Assessment Worksheet (EAW) was prepared and published in the Environmental Quality Boards publication for public comments. Comments were received and responses have been provided to staff for review and finalization of the EAW document and negative declaration. The negative declaration for an EIS was approved in August 2020.

In August 2021, the Concept Plan Amendment was approved. This included a revision to the senior campus site to be multi-family residential, and a revision to the northwest multi-family apartment site to be a stormwater pond.

The development team and the city have been working with MnDOT for over two years to ensure that the access to (and from) this site is safe and efficient. The review of these designs also considered the "upstream" and "downstream" impacts along TH 41. Additionally, the design options and ultimately the MnDOT preferred design (a roundabout @ Peavey as shown

on the site plan) have been reviewed by all of the MnDOT functional groups, not only in their Metro Office, but also the State Office in Saint Paul.

The preliminary site & building plan, preliminary plat and rezoning were approved in December 2021 for the existing conference center, the new multi-family residential, and the new Costco.

CHANGES SINCE PRELIMINARY APPROVALS

The following are changes that have been incorporated in the Final Plans since Preliminary:

- **Analysis of westbound left turn lane into Continental site**. During preliminary review, it was encouraged to provide an analysis on a potential westbound left turn lane on the ring road to access the Continental site. The developer has provided an analysis of this turn lane from the traffic engineer. The analysis indicated that "*a westbound LTL is NOT recommended at the south access (housing access) due to left-turn volumes into the housing development being low (less than 100 vehicles per hour). Queuing observed in the models was minimal throughout both peak hours under 2042 traffic volumes."* In addition, the developer also provided an exhibit showing the potential inclusion of a westbound left turn lane should conditions warrant such. This turn lane would require improvements to be made that extend outside of the current ring road layout. Staff is not requiring that this improvement be installed with the implementation of the development as the analysis concludes that the added left turn lane is not warranted.
- **Pondview Development to the North**. It was noted in the preliminary that there were concerns from adjacent neighbors in the Pondview business center. This business center is north of the Oak Ridge site who also have direct access onto Highway 41. City staff met with these neighbors in November 2021 and had follow up conversations on June 1st, 2022 to discuss the concerns more in depth. The concerns from these neighbors center around the safety of their existing access and how the proposed project and construction of the roundabout may effect the conditions of such. It is the City's intention to set up a follow up meeting with the property owners to further discuss the safety improvements at their access, the roundabout construction plan, timing of construction, planned detours, expected impacts, etc. This meeting is actively being set up. Additionally, MnDOT is not requiring changes or restrictions to the Pondview access in part with the roundabout improvements at Peavey with the Oak Ridge Development Project. The property owners are still interested in exploring options for their access and how to make it safer. City staff and MnDOT are actively committed to working with the Pondview property owners to explore these options, and will do so with the near future meeting that is being set up. The City will continue to meet with the property owners until this piece is addressed.
- **Communications Plan**. Projects of this level requiring closures to the regional highway system have significant impacts to not only the regional and local system but also businesses in the neighboring area. Staff is recommending the Oak Ridge project should continue to move forward under the condition that the developer provide a Project Communication Plan. The communications plan being recommend intends for the Developer or representative be responsive in communicating with the surrounding industrial and commercial business park and effectively communicate items such as project updates, timeline, closures, detours, etc. as a part of the proposed roundabout improvements. The communication plan will require providing exhibits and updates to

share with both City communications and also with State and County agencies. The plan will need to effectively communicate outreach to both businesses and the community both prior to and throughout the duration of the construction project

- **Continental Landscaping**. The landscaping for the Continental site was deficient in the preliminary submittal. The final plan now shows a plan that meets ordinance requirements for their site for the proposed and existing (outside of wooded steep slopes) plantings on site.

COMPREHENSIVE PLAN

The 2040 Comprehensive Plan recently got adopted and guides the subject property as Mixed Residential. The Mixed Residential designation in the Comprehensive Plan is designed to create land uses for residential, commercial, office, park, civic, and open space. The plan proposed is consistent with this.

CURRENT REQUEST

The request is for Final Site & Building Plan and Final Plat for the preservation of the Oak Ridge Conference Center, multi-family residential proposed by Continental, and a Costco on the Oak Ridge property. A new highway access is proposed on the northeast corner of the site to connect into Highway 41 in addition to the existing Highway 41 access in the middle of the site remaining. The access on the northeast corner will be a roundabout and the access in the middle of the site will be a ¾ access.

Project Goals. The applicant stated their project goals as:

- Fully develop the +/- 67 ac. of the Oak Ridge Conference Center property, under the original vision that was established for the property to be an active community hub.
- Expand the tax base of Chaska by providing a higher land values and opportunities for employment growth.
- Preserve the unique environmental features of the site.
- Assure the Oak Ridge Center Facility is a viable business.
- Adhere to the general guidelines of the Chaska Comprehensive Plan and PMD 4 zoning.
- Provide an area for workforce or market-rate apartments to meet the demand of Chaska's growing work force.
- Enhance the aesthetic image and safety of the Highway 41 corridor.
- Enhance the trail system through the development and have key connection to the public trail system.

Site Data

Existing Use:	Hotel/Conference Center and the remaining area as Vacant
Comprehensive Plan:	Mixed Residential
Zoning:	PMD-22
Size:	66.8 acres
Steep Slopes:	South, West and North sides of property
Vegetation:	Vegetation occurs mainly along the south, west and north sides of the property
Wetlands:	Southwest area of site
Shoreland:	50 feet from ordinary high water mark of Chaska Creek

Utilities: All utilities are available to service property
Road Access: Highway 41

Surrounding Area			
Direction	**Existing Use**	**Comp Plan**	**Zoning**
North	Big Woods Lake & Light Industrial	Open Space/Industrial	Park & Industrial
East (across TH 41)	Industrial	Industrial	Industrial
South	Twin Cities & Western Railroad, and Senior Housing	Mixed Residential	PRD
West	McKnight Lake & Rural Residential	Open Space/Rural Residential	Park & RR-2

Existing Conditions. The property was developed into the existing 171,000 square foot hotel and conference center back in 1987. There are 222 parking spaces. The conference center was set into the hillside along Lake McKnight to take advantage of the lake views and to set the building back into a somewhat secluded area of nature. The original intent of this development was to make this site a corporate retreat, so seclusion was a key component in the original design. The conference center is designed to look like an institutional facility as you approach the building from highway 41, but the lake side of the building has the stunning floor to ceiling glass wall to bring a part of the natural scenery into the complex.

Steep slope areas comprise about +/- 11.3 acres of the property and leave only 55.5 acres of developable land mainly along highway 41. As noted above, vegetation mainly exists along the south, west and north areas of the site.

Access to the site is currently served by one access point from Minnesota Highway 41 just off the curve of the bridge across the railroad.

The 3 Lots. For the purposes of review, we will break down the site into the 3 lots as shown in the Final Plat. The 3 lots are: Lot 1, Block 1, the Oak Ridge Conference Center/Hotel; Lot 2, Block 1, for Costco; and Lot 3, Block 1, the Multi-Family Residential use proposed by Continental. Further below will be an overall section on the development looking at the shared elements of the site and the elements that effect the development at large.

1. Lot 1, Block 1: Oak Ridge Conference Center/Hotel (~23 acres). The Oak Ridge Conference Center/Hotel building is planning to remain, however, they have "closed their doors" as of September 23, 2020. The building is currently vacant, and there is no identified end user for the building at this time. The building is approximately 171,000 square feet in size and has 222 parking stalls. The only noticeable change for this site is the orientation of parking in front of the building. Parking will be realigned/added on the north, northeast, east, and south areas of the building. They are proposing a total of 306 parking stalls with the new parking improvements that the facility would have access to. Parking improvements will be done when an end user is identified.

Staff notes:

- Comprehensive Plan. The conference center/hotel use complies with the comprehensive plan.

- Use & Parking. The proposed hotel/conference center would meet the need for the former use of the building as a hotel/conference center, where 294 spaces are required by code. The applicant has iterated in previous discussions and studies that the conference center could change in use in the future, specifically for office use. If that were to occur then changing a 171,000 square foot building to solely office would require 684 parking stalls, which well exceeds the 306 parking stalls proposed on this site. The applicant has completed a traffic study stating that a three-story parking ramp could be constructed to provide the site a total of 566 parking stalls, which is still below the 684 parking stall requirement. The developer will need to make changes to the site plan to accommodate (i.e. show in proof of parking) that they will meet parking requirements. A conditional use permit (CUP) would also be required if a parking ramp were pursued. Lot 1, Block 1 will provide a list of permitted uses in the zoning that staff deems acceptable to occupy the existing building. The zoning may, or can, be re-evaluated in the future should someone come in to propose a new use in the zoning or change to the building that deems acceptable for the intent of the zoning and meets site planning requirements. The Conference Center building shall come in for future approvals (Preliminary site & building plan, final site & building plan, rezoning if applicable, etc) when an end user is identified so the site plan can be properly vetted out.

- Parking Lot Entrances. In the concept plan it was iterated that the entrances into the new Oak Ridge parking lot layout need to line up with adjacent parking lot entrances on the site. The applicant has made this change in their preliminary site plan and is also reflected in their final site plan. The main entrance into the Oak Ridge parking lot will align with one of Costco's parking lot entrances. The other parking lot entrances proposed for Oak Ridge do not appear to be in conflict with traffic circulation on the site. The entrance location, size and configuration would appear to be adequate for the existing use on this site.

- Landscaping and Landscape Islands. The table below indicates the landscaping requirements for this site and how the applicant meets or does not meet them:

LOT 1, BLOCK 1 LANDSCAPING		
	Required	**Proposed**
Overstory Trees	534 caliper inches	188 caliper inches provided (166 trees) + 1,149 caliper inches existing = 1,350.5 caliper inches

Understory Trees	16	30
Shrubs	570	436

Based on the above, the landscaping provided for the existing building is more than sufficient. The shrub count is below the required threshold, however, the existing trees and provided trees more than make up for this discrepancy.

With the new orientation of the parking lot there are a couple new parking areas being created. With that, landscape islands are required for all newly created parking lots. The northerly and southerly added parking lots have incorporated parking lot islands that well exceed ordinance requirements.

- Lighting. The new parking layout will incorporate new lighting within it. The parking lots are proposing light poles at 25 and 30 feet high, which is within ordinance requirements for this site. In addition, light foot candles and fixtures will meet ordinance.

2. Lot 2, Block 1, Retail Site for Costco (~16 acres). The Costco site is shown on the east portion of the site shows a building of approximately 164,500 square feet in size that abuts Highway 41. The use of the building is a member-only warehouse (quasi-retail) user with a liquor store. In addition, they are also proposing a fuel station just northerly of the main building. Costco will bring approximately 150-200 both full time and part time employment opportunities. The large retail building is positioned adjacent to Highway 41 similarly to other big box retail in the area. It should be noted that the orientation of the building has changed since concept plan. The location is still in the same spot, however, the front of the building now faces north instead of west. The building was located based off existing grades and access points and positioned to hide it from lake views of adjacent or cross lots. Though strategic, the elevation relief between access is approximately 30 feet and the large retail building will require retaining walls and significant landscaping along Highway 41 to restrict views of the parking area from both Big Woods Lake and Highway 41.

Staff notes:

- Comprehensive Plan. The member-only wholesale (quasi-retail) use complies with the Comprehensive Plan.

- Building Materials/Design. The proposed building will be approximately 164,500 square feet in size, and approximately 31 feet in height at its highest point. The shape of the building is mainly rectangular but will have some recessions and protrusions in the front façade (north elevation) to provide for more interest. In addition, the architecture of the building incorporates a high level of details to tie into typical buildings found in Chaska as well as the palette found in the existing conference center building. The materials selected for this design respond to the larger scale of the building with appropriately proportioned structural brick units for appearance and constructability. The design is grounded with structural brick, reflecting the color of Chaska brick, comprising 42% of the building façade and is detailed with the use of limestone veneer and half-height split-face concrete masonry units to add texture and visual interest. Detailed vertical and horizontal articulation are represented through color, corbelling, soldier

coursing and textured banding while larger scale movements are represented through the use of parapet steps and variable brick massing heights. The remainder of the façades are comprised of high-quality architectural metal panels in two colors complimentary to the brick and masonry. The warehouse entry is a focal point to the site and the design incorporates pedestrian scaled detailing and the use of glass.

The City of Chaska has certain building design and material requirements for commercial buildings. A portion of it is stated as follows:

"Office, Commercial, Public and Institutional buildings shall use at least three (3) Class I materials and shall be composed of at least seventy (70) percent Class I materials and shall not exceed thirty (30) percent Class II or Class III materials."

Building Materials	
Class I	Glass, brick, Architectural Metal Paneling (2 colors), and Limestone (97%)
Class II	Concrete Panels (3%)
Class III	Not provided
CLASS I REQUIRED	70%; three different materials
CLASS II REQUIRED	Shall not exceed 30%
CLASS I PROVIDED	97%; four different materials
CLASS II PROVIDED	3%; one material

Based on the above, the building is meeting the commercial standards. It should be noted that the structural brick proposed is a utility brick. By ordinance this is considered a Class II material (modular brick is Class I), however, staff is amenable to this type of brick being used on this size of building as it is more scale-appropriate, and the use of the building is more reminiscent of industrial/warehousing where such material is more acceptable. Similar scaled buildings, Super Target and Home Depot, also applied this type of brick so it would not be out of the ordinary of what is already seen in the community.

- Fuel Station. A fuel station is proposed on the northeast corner of the site. This fuel station will be accessed through the proposed parking lot of Costco. A warming hut with restroom will be provided for the fuel facility attendants. It should be noted that there is no convenience store proposed for the fuel facility. The fueling facility will initially provide for four islands with 12 dispensers allowing for 24 pumping locations. The fueling facility area has been designed with room to extend the islands if needed in the future, which will allow an expansion of four more pumps providing for an additional 8 pumping locations. In the ultimate configuration the fueling facility will provide a total of 32 pumping locations. The fuel canopy will be designed to match the principal building by incorporating Chaska colored brick on the support structures.

- Outdoor Gathering Place. These large retail areas are enhanced by having well placed and designed outdoor gathering places (someplace to take a break or eat your lunch). The plan is showing an outdoor gathering place on the northeasterly side of the building that will be encompassed with a picnic table, benches and landscaping.

- Loading Dock. There is a loading dock proposed on the northeast portion of the building. This portion of the building is more exposed to the Highway 41 edge. The loading dock will be gradually recessed into grade approximately 4 feet. A 3.5 foot screen wall will sit above this recession to provide for additional screening. Berming is also proposed on the east edge of the property (up to 7 feet high near the loading dock area) that will help screen the parking lot and loading dock areas. A site section drawing shows how the berm and landscaping will provide adequate screening to the loading dock area. If the berming cannot be completed as shown (due to the berming being in MnDOT ROW and their requirements may modify this area differently), then this screen wall will have to be compensated appropriately to screen the trucks.

- Screening along Highway 41. Because of the high visibility from Highway 41 the building will have to provide a high level of landscaping and screening on this edge to help soften up the building and the parking lot. A mixture of articulative architecture and landscaping/berming will be important. The plans are showing the inclusion of a berm ranging in height up to 7 feet tall as well as a mixture of evergreen trees up to 12 feet tall. A section drawing shows how the berm and landscaping will provide adequate screening from the highway for the loading dock, parking, and the generator compactor area. As stated before, if this berm is not able to be implemented as proposed then more height compensation has to take place with the loading dock screen wall.

- Landscaping and Landscape Islands. The table below indicates the landscaping requirements for this site and how the applicant meets or does not meet them:

LOT 2, BLOCK 1 LANDSCAPING		
	Required	**Proposed**
Overstory Trees	1,028 caliper inches (284 trees)	725 caliper inches (166 trees) + 17.5 caliper inches (7 ring road trees added) = 742.5 caliper inches
Understory Trees	71	71
Shrubs	548	1,605

According to the table above the applicant is insufficient in meeting the overstory requirement on this lot. However, the applicant has generally maxed out every green area of the site. The applicant has also provided larger plantings (thirty-five 12' evergreens) in order to try to compensate for the insufficiency. This size of building (over 24 feet in height) requires double the landscaping as it is considered a two-story

building. If the building was a "one-story" building, then the proposed landscaping would exceed the requirements of code by 211 caliper inches. The landscape ordinance is a sliding scale so the larger the building the larger the landscaping requirements; the other site requirements get larger as well (ie. parking, ponding, utilities). In regards to that, it becomes more challenging in trying to balance out all the required elements. Rather than squeezing additional landscaping onto the site purely to meet the numerical requirement, the applicant has looked at the landscape plan holistically to see what works for the property and the intent of the ordinance. As such they focused on a dense landscape design and placed the larger trees around the perimeter of the property, specifically along Highway 41 and along the rear of the main building. There doesn't appear to be other areas of opportunity that can be explored to place more trees on the site, and it appears that the applicant has put their best foot forward in order to get close to the landscape requirements. Because of this staff is comfortable with what is shown for landscaping. It should be noted that Costco is willing to place trees within the right-of-way (ROW) of Highway 41 if MnDOT would be acceptable to this. If so, it will allow for more plantings to enhance the site.

Landscape islands will also be incorporated throughout the parking lot of the site (proposing 10% of parking area). The planting islands meet the City's planting island requirement to provide at least 10% of the parking area for such.

- Parking. parking spaces are proposed as a part of Lot 2, Block 1's site plan. The following chart summarizes the overall parking demand on the site, based on the approximated sizes of the conceptual uses.

Uses	Approx. Size	Code Req.	Est. Parking Req.
Retail	164,545 sf	1ps/200 sf (5ps/1,000 sf)	823 parking spaces
		REQUIRED	**823 parking spaces**
		PROVIDED	**779 parking spaces**

According to this table the applicant is not meeting the required amount of parking spaces needed for a retail use. However, Costco is a member-only warehouse (quasi-retail) and is not the same as other big box retailers (i.e. Super Target). Staff has done numerous field studies at other twin cities' Costcos to understand the parking need appropriate for this type of use. Staff visited the Eden Prairie, Saint Louis Park, and Eagan Costcos over a period of time and at various times of days (week days/evenings and weekends). The conclusion showed that these stores averaged out to use a maximum of 3.4 parking stalls per 1,000 square feet of building space. The proposed Chaska Costco is showing 4.7 stalls per 1,000 square feet. Because of this staff is very comfortable with the parking provided even though it falls slightly short of the parking code requirement for a typical retailer. The proposed zoning for this site reflects a member-only warehouse as a permitted use and not a general retailer.

- Retaining Walls. There are several retaining walls proposed around the perimeter of the Costco site. The reason for this is due to the significant grade change that occurs in the northeast portion of the site, as well as providing a safe and level approach for the new private loop street, and intersection/development entrance at Peavey Road and Highway

41. The most significant of the retaining walls is located on the northeast corner of the Costco site that faces Highway 41 and the private loop street. At its tallest point it will be 24 feet tall. It will taper in height as it wraps around on the corner on both sides. Tiers will be provided to help break up the massing appropriately and meet the City's retaining wall ordinance. In addition, landscaping (trees and shrubs) will be adorned around the perimeter to help soften the edge. The wall will be made of modular concrete block, which is consistent in style and color for all the retaining walls proposed on site. The northeast corner of the wall will also be the location for development signage. In sum, the retaining walls will meet the City's ordinance.

- Cart Corral. Cart corrals have been delineated on the Costco site plan. The carts are collected throughout the day, and all carts will be brought inside the building at the end of the day. There will be no overnight storage of carts.

- Lighting. The lighting plan shows the inclusion of light poles in the parking lot at 36.5 feet in height. The lighting ordinance only allows a maximum of 35 feet in height. The final plans will have to reflect a lighting plan that meets this requirement.

- Mechanical Equipment Screening. Screening of rooftop units is achieved with building parapets. Site sections have been provided to depict the line of sight taken from the opposite side of the roads to reflect that rooftop units will be screened. After construction, should a small portion of a roof top unit be visible, the applicant states that the unit will be painted to match the wall directly adjacent. The operation and placement of the building on the site locates the side of the load dock, the compactors and transformer along Hazeltine Boulevard (Truck Highway 41). To screen the visibility of these elements, the landscaping has been thoughtfully designed and sections from Hazeltine have been provided to reflect this condition.

- Signage. Free-standing monument or pylon signs are not proposed by Costco as they prefer to rely on the building wall and fuel facility canopy signage to identify the property and store. Wall signage is intentionally located and sized proportionally to the façade for off-site visibility and on-site directional cueing. Signage size and locations are depicted on the architectural elevations and architectural site plan. There will be two development signs at both Highway 41 vehicle entrances into the Oak Ridge development that Costco could utilize should they opt for monument signage. At this time, the sign plan does not show them incorporated in this.

4. Lot 3, Block 1, Multi-Family Residential by Continental (~28 acres). This area will consist of 280 units of market-rate dwelling units. The 280 units would be spread across 14 residential buildings at two-stories tall (20 units per building). There will be a variety of unit types with a total of 28 studio, 112 one-bedroom, 112 two-bedroom, and 28 three-bedroom units. Residents will have the choice between attached/direct-access garages, detached garages, or surface parking to fit their vehicular needs. In addition to the 14 residential buildings, the site will also offer a 4,630 square foot clubhouse, car care area, pet areas, and storage lockers. The development shows access off of the proposed private internal roadway that will loop the other uses of Oak Ridge out to Highway 41. The clubhouse is situated towards the main vehicle entrance off the loop road on the northeast

portion of the site. The clubhouse will offer a fitness center, employee offices, indoor gathering space, outdoor pool, and tot lot.

This area will be known as the "Springs at McKnight Lake".
Staff notes:

- Comprehensive Plan. This multi-family use meets the Comprehensive Plan.

- Building Materials/Design & Housing Diversity. The 14 residential buildings proposed are all two stories in height with 20 units in each. The materials proposed will be a mix of Hardie siding, brick masonry and glass. The applicant is showing that a Chaska brick color will be the masonry used on all buildings to better fit into the community, including the clubhouse building. Four color schemes are proposed among the buildings. An exhibit also shows how these color schemes will be organized on site. These buildings, by definition, are not required to meet certain Building Design and Materials as defined in ordinance, however, the applicant has provided plans/materials that do meet ordinance for multi-family.

  It was noted during the Concept Plan Amendment for this project that there is a Housing Policy in the City's comprehensive plan that states *"Continue to encourage limiting the number of townhouses of any one product line to approximately 75 units. Historically, townhouse projects in Chaska have limited their product lines to below this number, due to the smaller size of the parcels that were available. This limitation has helped provide the community with a variety of housing styles and prices and made the associations less vulnerable to downturns in any one product line due to changes in the buying pattern of the general public."* This policy has been consistently maintained in other townhouse-styled communities of Chaska, with approximately 75 or more units from the same development, can be seen mixed with other very different housing styles (ie. different townhouse designs, detached villas, rowhomes, single-family, apartments, etc).

  The style of these buildings and development reads very much as a townhouse styled product, with the individual exterior entrances and exterior corridor areas as opposed to an internal corridor/spine. Because of this, staff would interpret that the housing policy noted above would apply. In order to achieve the above, the development would have to integrate additional, and different, residentially designed products within the 280 units.

  The applicant has used the time after Concept Plan to work on the various designs for the buildings so that they read different from each other. The applicant has provided four different designs, as well as four different color schemes to differentiate the clusters of buildings (not one design will exceed the 75 unit threshold). They are known as Contemporary, Craftsman, Ranch, and Prairie. See below on how these various types will be organized and designed.



Building Scheme – Contemporary:



Most similar to the Clubhouse, the contemporary scheme draws on a large percentage of Chaska brick, contemporary panel siding and metal roof accents. The blues and grays echo the sky and waters of McKnight Lake and the white trim and garage doors adds contrast while providing clean and fresh look.

Building Scheme – Craftsman:



The craftsman scheme known for its large percentage of vertical board and batten siding will be another architectural scheme. A total of 8 dormers (four on the front and back) will break up the roofline and metal accents, including standing seam metal roofing on the dormers will add further architectural interest. Earth tones with a dark contrasting trim color will tie this scheme into the surrounding landscape and the other building schemes. Burgundy front doors offer a distinctive color that has been traditionally welcoming people home for years.

Building Scheme – Prairie:



The prairie scheme is characterized by long horizontal bands of material and the hipped roofs will provide more roof variation within the community. The Chaska brick grounds this scheme when applied in the low horizontal bands as shown and the green and beige color scheme really ties this building to the earth. A copper color front entry offers a nice pop of color while still being cohesive with a natural, earthy look.

Building Scheme – Ranch:



The ranch scheme, characterized by raised center roof line, will provide some height with the various schemes. Proposed to be located towards the middle of the site, the ranch scheme will anchor the community. Dark shake siding with the creamy Chaska brick will provide great contrast and offer a traditional & historic look further echoing a sense of place & community.

Based on the aforementioned, staff believes the applicant has incorporated an acceptable amount of changes in the 4 different designs to help differentiate them.

- Mechanical Equipment Screening. When visiting the Springs at Lakeville, staff noticed that mechanical equipment (ie. ac units) are primarily located on the ground level next to the building. Granted the development was newer and landscaping was just installed, the ac units were very prominent in terms of visibility. The applicant is proposing Mint Julep Junipers to be placed in strategic planting groupings to provide more effective screening. These plants have a maximum growing height of six feet with a typical spread of three feet. The Junipers are also evergreening, which means they will be more effective year-round in lieu of the grasses typically seen elsewhere. There are two buildings (Buildings 3 & 4) that are directly adjacent to the ring road that staff wants to ensure the utility boxes and/or the ac units are strategically placed and screened. The applicant has indicated in their plans that the building utilities will be screened with additional plantings or relocated in a more obscure location on the building if they should be visible from the ring road. Staff will continue to coordinate with the applicant on this when construction commences.





- Security Gates & Perimeter Fencing. The concept submittal included a proposed site plan with a perimeter fence and automated entry-drive gates, a feature of the Springs brand. Preliminary feedback received was that fencing, and gates promoted a sense of division and exclusion from the broader community. Continental has removed the perimeter fence and gates from the site plan. Fencing and security gates remain around the pool and pet parks for child and pet safety.

- Relationship to McKnight Lake. The lake and trails sit well below this site and will have minimal viewsheds due to the buildings being two-stories tall. However, it will still be important to provide articulation in the landscaping and buildings so that what is seen from public view is well articulated. The stormwater area on the western side will be the closest element to the public trail and should also be landscaped around it so there is natural separation. The landscape plan now shows the inclusion of more trees in this area to help enhance that edge.

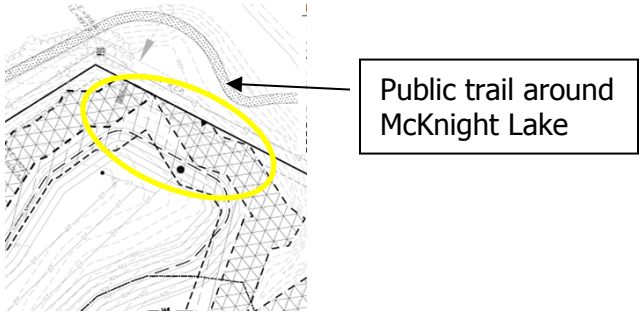

- Usable Open Space & Amenities. Multi-family residential facilities require a level of usable open space (a minimum of 15% of the gross site area for this site). The applicant has indicated several amenity areas that will be provided such as the clubhouse, tot lot with a playground structure, outdoor grilling area, outdoor pool, and pet playground areas. The amenity areas will make up over 15% of the gross site area. The applicant states that their amenity areas are based on the resident demographics that occupy their communities, which is predominantly people between the ages of 20-34 (42%) and 35-49 (20%). Kids make up roughly 15% of the demographic according to their data. It was noted in the Concept Plan that having an amenity for children would be important due to the fact that this is physically secluded from adjacent child-friendly parks/amenities. The applicant is now showing a tot lot area adjacent to the proposed clubhouse.

In addition, the Springs communities are all pet friendly. Each Springs community averages around 97 dogs. Because of this many of the amenities offered are targeted towards pets (ie. pet playgrounds and pet wash station).

Because of the proximity of the lake and wooded areas, it would be beneficial to tie the usable open space areas to these elements via viewsheds. The applicant is now showing a paved trail to connect into the public trail around the lakes. In addition, they will be providing a mowed path around the southerly pond that residents can utilize.

- Parking, Covered Stalls & Turnarounds. The multi-family use will have to meet the City's multi-family residential parking requirement, which is 2 parking stalls per dwelling unit (280 dwelling units; 560 stalls required). The site plan is showing a total of 576 parking spaces, which exceeds the City's requirements. The breakdown of this is as follows:

    - Attached Garage Stalls: 112
    - Detached Garage Stalls: 30
    - Surface Parking Stalls: 433

  The amount of covered parking stalls (142) is lower than the total dwelling unit count (280). The applicant states that in the Metro Minneapolis market, the Springs properties average 50% garage to unit ratio. In other Springs communities the data shows that residents do not need covered/garage parking for every dwelling unit. Because of this the project only shows a less than one for one ratio on covered parking.

  Feedback received during the Concept Plan was that the covered parking ratio was too low, and that Continental should consider providing more covered parking. Continental believes that 50% covered parking is not only adequate but advantageous to the resident. By offering multiple different options (attached, detached, or surface parking), residents can select the option that makes the most sense for them. By providing a greater number of options, they provide their residents the ability to customize their living experience to best meet their needs. However, Continental did review the site plan and identify three locations to design for "future use" detached garages should the demand be greater than their demand expectations. These "proposed locations for future garages if needed" can be found on the Site Plan located in Exhibit C of Continental's narrative. If built, these future garages would provide approximately 18 more covered stalls, which would change the covered parking ratio from 50% to 57%. In addition to the proposed future garages, Continental prepared additional parking and snow storage exhibits located in Exhibit D to show the relationship between the buildings, available surface parking, and available snow storage. The Springs at McKnight Lake is designed to ensure not only all buildings have adequate parking, but that parking is located within a reasonable proximity. The additional stalls over and above the parking code will be also be used for snow storage in the winter months. Snow removal is contracted out to professional companies and snow loads will be pushed into these designated areas. In particularly heavy snow years, snow will be professionally removed off property to ensure adequate parking remains.

As for comments regarding the twisting and turning nature of the site and the concern for emergency vehicles, Civil engineers have received specific emergency vehicle turning radius information from Chaska and had designed the site accordingly. Please see the civil plans for specific radii information and site design.

- Landscaping & Screening. The table below indicates the landscaping requirements for this site:

LOT 3, BLOCK 1 LANDSCAPING		
	Required	**Proposed**
Overstory Trees	1,050 caliper inches (336 trees)	712 caliper inches (202 trees) + 731 caliper inches existing = 1,443 caliper inches provided
Understory Trees	84	71
Shrubs	461	1,997

According to the table above the site is meeting the overstory requirement. The site has been enhanced significantly since preliminary submittal. 70 additional overstory trees have been added to the site plan. The areas of focus have been the area around the stormwater pond on the west side, as well as the parking lot on the northwest side of the site to provide additional screening. Existing trees have also been surveyed that fall outside of the wooded steep slopes. This site is unique in that it is completely surrounded by mature trees, with the exception of the north edge. In sum, the site will provide a healthy layer of new and existing trees.

Landscape islands are also provided throughout the parking lots. The site plan provides for landscape islands that meet code.

Along Highway 41 & the TC&W Railway trees were placed strategically along the site grading to create a natural buffer between the highway, railway, and the community. Mainly 12 foot tall spruce trees will be placed here, but there will also be a mix of shrubs, deciduous and ornamental trees. It should be noted that the railway sits approximately 15-20 feet lower than the community. The difference in elevation, existing trees & undergrowth that will remain along the perimeter as well as the buffer trees planted next to the community will be an adequate buffer.

- Lighting. A Photometric Plan was provided in this submittal. The lighting plan shows the inclusion of 25 foot high light poles in the parking lots with light fixtures that are fully concealed and face down.

- Signage. The applicant has provided an exhibit showing the signage for the site. Specifically, wall signs on the clubhouse building and a monument sign at the main entrance off the ring road. Additional panel signage will be included on the business center monument signs at both highway entrances. It should be noted that signage for the residential use cannot be internally illuminated. The monument sign at the main entrance for Springs will need to be revised so that it is not internally illuminated. As noted in previous analyses, the monument sign and wall signs can be illuminated by an external light source (i.e. gooseneck lighting or up/down lighting). This will need to be revised prior to a sign permit being obtained. Signs will have to go through separate approvals in order to be installed.

- Sidewalks & Trails. The overall Oak Ridge site will contain a network of trails and sidewalks that will be important to show how this site connects into the broader system as well as internally. The site plan is showing a series of internal sidewalks that run through each of the courtyard settings of the buildings.

  Public trails currently exist on the western and southern edges abutting this site that loop around McKnight Lake. There is an existing opening/mowed trail that extends to the public trail on the southwest portion of the site, which the applicant is showing a paved trail to be installed here. The paved trail will extend up to the sidewalk system in the multi-family site. In addition, the site is showing a mowed path that will encircle the proposed stormwater pond. This path will be accessed off the paved trail to be extended to the existing public trail.

- EAW, Traffic Comparison & Access. In 2020, the City and developer completed a EAW for the site. The EAW was based off the previous March 2020 uses. The applicant has prepared traffic figures to show the difference between the new multi-family use and the previous Senior living campus and multi-family uses. In conclusion, the numbers reflect the trip generation to be lower than the previous uses. It does not appear based on the decreased numbers that a separate EAW needs to be completed.

  Access to the site is shown on the loop road that connects into the greater system of Highway 41. The traffic report demonstrates that this access will operate in an acceptable service. During preliminary review, it was encouraged to provide an analysis on a potential westbound left turn lane on the ring road to access the Continental site. The developer has provided an analysis of this turn lane. The analysis indicated that "*a westbound LTL is NOT recommended at the south access (housing access) due to left-turn volumes into the housing development being low (less than 100 vehicles per hour). Queuing observed in the models was minimal throughout both peak hours under 2042 traffic volumes."* In addition, the developer also provided an exhibit showing the potential inclusion of a westbound left turn lane. This turn lane would require improvements to be made that extend outside of the current ring road layout. Staff is not requiring that this improvement be installed with the implementation of the development as the analysis concludes that the added left turn lane is not warranted.

- Setbacks. The developer should anticipate typical residential setbacks for this development. Buildings should be setback 150 feet from the centerline Highway 41. Buildings should also be setback a minimum of 50 feet from each edge of wooded steep

slopes (30 foot no grade-mow), 50 feet from the ordinary high-water mark of Chaska Creek, 40 feet from City park land (including City trails), and 50 feet from the Twin Cities and Western railway right-of-way.

Freestanding signs are required to be setback at least 15 feet from the right-of-way of Highway 41, and 10 feet from all other property lines.

- Utilities & Grading. Water and sewer are available to serve the site. The project's storm water design will need to meet the City's, Carver County Water Management's, and appropriate State and Federal requirements.

  Site grading will need to address and manage the steep slopes and rolling terrain over the property. The site directly abuts McKnight Lake to the west with steep wooded slopes. It will be important that wooded steep slope setbacks are adhered to. Stormwater management and properly routing drainage will be critical for protecting both lakes and the steep slopes from erosion. Adhering to the City's stormwater management requirements for controlling stormwater runoff rates and providing water treatment will be important since the site will drain to the lakes.

Overall Development Site Items

Access & Traffic. There are two proposed site accesses, the existing Oakridge Drive access off of Highway 41 and a new access on Highway 41 that lines up with Peavey Road. The existing access will be converted to a ¾ access. The Peavey Road access will be the main access and it is proposed the intersection will be reconstructed to provide a multi-lane roundabout. MnDOT is currently reviewing these access points and the improvements proposed. The access into the site will then provide an internal, private road spine that will give access to all three sites.

The traffic impact analysis and Intersection Control Evaluation completed for the development required state agency approvals for access and improvements onto the state highway. The analysis that was done evaluated many characteristics such as intersection safety, traffic mobility, and the appropriate geometric and traffic improvements related to the Oak Ridge Development at the intersection of Minnesota Trunk Highway 41 (TH 41) and Peavey.

Of the traffic control devices that were evaluated which include both a signal and a roundabout, the state has approved a roundabout due to providing the highest level of safety as compared to the traffic signal option along with future traffic demands for the corridor. The roundabout option provides for higher traffic growth as compared to the signal along the corridor as well as it being consistent with the recent roundabout traffic control intersection that was completed north of the intersection at Lyman Boulevard. Other technical factors that weighed into a roundabout as the preferred option as opposed to a signal included the high-speed approaches coming into the intersection, horizontal and vertical curvature of the existing roadway making sightlines difficult at the intersection, and maintaining acceptable operations for the Lyman Boulevard roundabout. The dual lane roundabout based on the analysis concluded based on the 20 year forecasted traffic volumes that the overall intersection will operate at a level of service C, which is an acceptable level.

Pondview Development to the North. It was noted in the preliminary that there were concerns from adjacent neighbors in the Pondview business center. This business center is north of the Oak Ridge site who also have direct access onto Highway 41. City staff met with these neighbors in November 2021 and had follow up conversations on June 1st to discuss the concerns more in depth. The concerns from these neighbors center around the safety of their existing access and how the proposed project and construction of the roundabout may effect the conditions of such. It is the City's intention to set up a follow up meeting with the property owners to further discuss the safety improvements at their access, the roundabout construction plan, timing of construction, planned detours, expected impacts, etc. This meeting is actively being set up. Staff believes that the Oak Ridge project should continue to move forward under the condition that the developer provide a communication plan of the proposed roundabout improvements to be shared with effected property owners prior to construction beginning.

Utilities and Stormwater. Water and sewer are available to serve the site. The project's storm water design will meet the City's, Carver County Water Management's, and appropriate State and Federal requirements.

Setbacks. The developer should anticipate typical commercial and residential setbacks for this development. Buildings should be setback 150 feet from the centerline (from centerline of adjacent travel lane) of Highway 41. Buildings should also be setback a minimum of 50 feet from each edge of wooded steep slopes (30 foot no grade-mow), 50 feet from the ordinary high water mark of Chaska Creek, 40 feet from City park land (including City trails), and 50 feet from the Twin Cities and Western railway right-of-way.

Freestanding signs are required to be setback at least 15 feet from the right-of-way of Highway 41, and 10 feet from all other property lines.

Parking, loading and driving areas shall be setback a minimum of 15 feet from property lines and 50 feet from the edge of the embankment adjacent to the West Chaska Creek drainageway as defined by slopes of 18 percent or greater.

Cohesive Building Design. The project is planned to have an architectural theme that crosses over the 2 areas and ties in with the existing Oak Ridge Conference Center building. This theme is reflective of place and Chaska as a whole in their choices of materials and massing. The new buildings propose to use Chaska brick within their designs, which provides cohesiveness between all the buildings. The Costco building also brings in brick design elements found on typical Chaska buildings and also the existing conference center. The retaining walls used around the sites will also be cohesive material and color.

Signage. Development signage is proposed at the two different highway entrances into the site. One at the Peavey Road intersection on the retaining wall of the northeast corner of Costco's site, and one at the ¾ access near the parking lot adjacent to the Continental clubhouse. The signs will need to apply for separate sign permits in order to be installed. The freestanding/monument signs also need to meet the 15 foot sign setback from the ROW of Highway 41. This will need to be shown on the final plans.

Parkland. The area which makes up this plan does not contain areas required for city parks, per the Comprehensive Plan. As such the developer would be responsible for paying park

dedication fees during the platting process. Park dedication fees were paid for the conference center use, but the intensification of the remaining portions of the site will be required to pay separately. The parkland dedication fees will be required for the intensification of the site, which includes the added lots above what was originally platted with Oak Knoll. At this time, the Continental site will be required to pay fees. Parkland dedication fees are required on this site as it does not propose public amenities. Parkland dedication fees will be important as this site is physically isolated from the greater public systems and amenities due to the Twin Cities and Western railroad separating this site from the southern area. The fees will help provide funds that can execute a connected system to the greater public systems and amenities by creating a physical pedestrian connection across the Twin Cities and Western railroad.

Tree Preservation. The main areas for tree preservation will be located along the north, west and south sides of the property along the wooded steep slopes. As well as certain areas on the existing conference center site. A tree survey of the disturbance area on the property found a total of 904 trees (8,303 caliper inches). Of those trees surveyed, 638 trees (6,486 caliper inches) are being removed, while 266 trees (1,817 caliper inches) will be saved. There are numerous additional trees on the 11.95 acres of steep slopes and low-lying areas which are being preserved to maintain the integrity of the slope areas and natural beauty of the site. The trees being preserved appear to be a mixture of oaks, maples, basswood, and other hardwood. Most of the trees being removed are situated in the center of the site and include spruce, Aspen, Ash, Basswood, Box Elder, Crab Apple Cherry, along with some oak ands and elms.

Wooded Steep Slope. The buildings all are set back 50 feet from the steep slopes and have a 30 ft no grade zone on top of the steep slope. The northerly access road does encroach into this area in a few spots, due to the location and geometric alignment to connect to the intersection of Peavy Road and Highway 41. In the areas of impact, a minimal number of significant trees are impacted and a series of retaining walls are being used to protect the slopes and minimize the impact to the woods and slopes in the area. The intersection of Peavey Road and Highway 41 occurs right in the steep slope area, and in order to maintain safe roadway geometry, these areas of slope is required to be impacted.

Sidewalks & Trails. The site contains a network of trails and sidewalks. Sidewalks will be installed on at least one side of the main street. It should be noted that both sides of the street do not incorporate sidewalks due to limited room for such. The overall site still provides for continuous connectivity through the various sites to connect into each site and the overall systems accordingly.

Public trails currently exist on the western edge abutting the site. This trail provides a loop around McKnight Lake. There is also a manmade trail abutting the north side of the site. It will be important that the overall development provides access into these systems. So far, the developer is showing connections to this system that occur on the south side, middle of the site near the conference center, and on the north side of the site in two different areas (one coming from the proposed parking area of the conference center, and one coming from the intersection of Oakridge Drive and Highway 41). The Comprehensive Plan calls out a future trail link on the north side of the site to connect the existing McKnight Lake trail out to Highway 41, which is being shown with the aforementioned.

Development Costs (Infrastructure Improvements)

The City of Chaska has a number of area-wide development cost such as, but not limited to:

- New Signal/Lane Improvements/Roundabout on TH 41
- Storm Sewer
- Trails
- Parks

Prior to final platting, the developer will need to work with City Staff to determine which of these are applicable and what those fees will be.

Reciprocal Easement Agreement (REA) & Development Maintenance. A critical part of a master development such as this is the ongoing ownership and maintenance of common areas. For Oak Ridge Commons, the three users will share access points and a ring road, stormwater treatment, shared dry utility trenches, and internal sidewalks and trail connections. As part of this development, a Declaration of Construction, Operation and Reciprocal Easements ("REA" for short) will be agreed to by all parties. This document lays out the primary responsibilities of each party with regard to maintenance, shared access to roads and utilities, and lays out ongoing cost sharing for required maintenance as needed. Specifically, the document is being designed to facilitate efficient ongoing management whereby Costco is principally responsible for maintaining the private loop road (Oak Ridge Drive), while the hotel owner will be responsible for maintaining the stormwater pond that serves the entire development. This structure not only reduces the annual administration of the project, but clearly delineates responsibilities. If there is a major capital need in the future for any common area infrastructure, there will be a mechanism for the 3 participants to share in those costs (i.e., a resurfacing of the loop road in 15 years).

City Land Acquisition. There is one area that would require a city land sale. It occurs on the northwest portion of the TH 41 roundabout at Peavey Road. The retaining walls and a portion of the ring road encroach onto City land. The sliver that encompasses the retaining walls/ring road should be in the development's ownership. They intend to maintain these retaining walls under the REA as stated above, however, it would be best applied if it were fully in their ownership. With that said, the City would require that the developer purchase the portion of land on which they plan to encroach. The robust nature of the traffic improvements are necessitated by Costco; therefore, the sale of the city land should be valued the same as (on a square foot basis) the Costco purchase price.

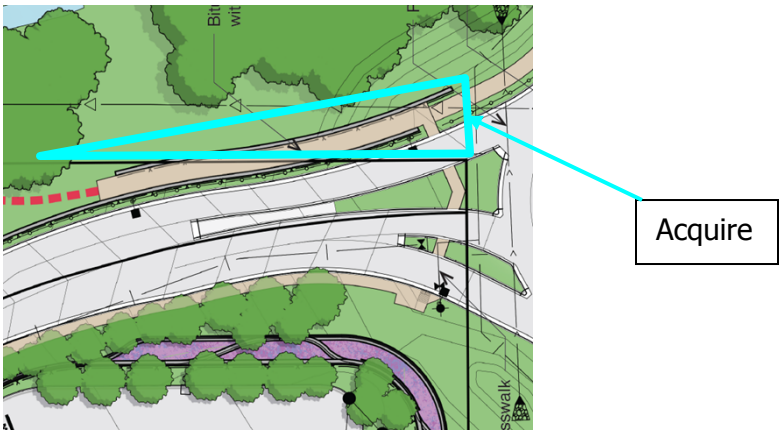

EAW. The developer and City have completed this document and have issued a negative declaration on an EIS as of August 17, 2020.

Final Plat. The Final Plat is showing the creation of three (3) lots. There are no outlots proposed. The three lots are as follows:

- Lot 1 (~23 acres): existing Conference Center
- Lot 2 (~16 acres): Costco
- Lot 3 (~28): multi-family residential by Continental

Phasing of the Site. The overall master site work will occur at one time, starting immediately after closing with Costco and Continental (which is anticipated to occur a day or two after recording the final plat in July). It is expected that all of the summer and fall will be needed to complete the master site work (demolition, stormwater, utility work, grading, and loop road work, etc) with likely some landscaping and final cleanup in Spring 2023. The only portion of the master site work that won't be completed during this timeframe is the build back of the hotel parking lot, which will be completed upon a user being identified, under contract to purchase the hotel, and moving towards a closing. It is anticipated that the Costco and Continental sites, respectively, will be handed over to them in Spring 2023. Costco's timeline is about 6 months to build and open the store after taking over their site, and expect to be open in Late Fall 2023. Also attached to the packet is a Sequencing Plan for the Continental portion of the project. Approximately 10-11 months after breaking ground the Clubhouse turnover is expected, and they will have an apartment building turn overs every 3 weeks thereafter.

Deadline for Agency Actions. The City of Chaska received the complete application for this request on Tuesday, May 3, 2022. Pursuant to Minnesota State Statutes the City must act on this request by Saturday, July 2, 2022 (60 days), however the City can provide the petitioner with written reasons for an additional 60-day review period, which would extend to a deadline of **Wednesday, August 31, 2022 (120 days)**. The City may with the petitioner's consent extend the review period beyond the Wednesday, August 31, 2022 date. Lastly, if the City denies the petitioners request "… it must state in writing the reasons for the denial at the time it denies the request."

PLANNING COMMISSION ACTION REQUESTED:

Motion to recommend to City Council approval of the Oak Ridge Final Site & Building Plan and Final Plat, and direct staff to continue to work with the Pondview property owners on their highway access, subject to the following conditions:

1. Approvals shall be based on the following graphic exhibits:
    a. Cover Sheet (pg C-0.0), prepared by Alliant, dated April 25, 2022
    b. Alta Survey (pgs 1-4), prepared by Egan, Field & Nowak, Inc., undated
    c. Final Plat (pgs 1-3), prepared by Egan, Field & Nowak, Inc., undated
    d. Demolition Plan (pg D-1.0), prepared by Alliant, dated April 25, 2022
    e. Overall Interim Conditions (pg C-2.0), prepared by Alliant, dated April 25, 2022
    f. Interim Conditions Plan – View 1 (pg C-2.1), prepared by Alliant, dated April 25, 2022
    g. Interim Conditions Plan – View 2 (pg C-2.2), prepared by Alliant, dated April 25, 2022
    h. Interim Conditions Plan – View 3 (pg C-2.3), prepared by Alliant, dated April 25, 2022
    i. Overall Site Plan (pg C-3.0), prepared by Alliant, dated April 25, 2022
    j. Site Plan – View 1 (pg C-3.1), prepared by Alliant, dated April 25, 2022
    k. Site Plan – View 2 (pg C-3.2), prepared by Alliant, dated April 25, 2022

l. Site Plan – View 3 (pg C-3.3), prepared by Alliant, dated April 25, 2022
m. Snow Storage Plan (pg C-3.5), prepared by Alliant, dated April 25, 2022
n. Pedestrian Circulation Plan (pg C-3.6), prepared by Alliant, dated April 25, 2022
o. Open Space Plan (pg C-3.7), prepared by Alliant, dated April 25, 2022
p. Fire Truck Movement Plan (pg C-3.8), prepared by Alliant, dated April 25, 2022
q. Pavement Plan (pg C-3.9), prepared by Alliant, dated April 25, 2022
r. Overall Grading Plan (pg C-4.0), prepared by Alliant, dated April 25, 2022
s. Grading Plan – View 1 (pg C-4.1), prepared by Alliant, dated April 25, 2022
t. Grading Plan – View 2 (pg C-4.2), prepared by Alliant, dated April 25, 2022
u. Grading Plan – View 3 (pg C-4.3), prepared by Alliant, dated April 25, 2022
v. Grading Plan – Springs Enlargement Plan 1 (pg C-4.4), prepared by Alliant, dated April 25, 2022
w. Grading Plan – Springs Enlargement Plan 2 (pg C-4.5), prepared by Alliant, dated April 25, 2022
x. Grading Plan – Springs Enlargement Plan 3 (pg C-4.6), prepared by Alliant, dated April 25, 2022
y. Overall Emergency Overflow Plan (pg C-4.7), prepared by Alliant, dated April 25, 2022
z. Emergency Overflow Plan – View 1 (pg C-4.8), prepared by Alliant, dated April 25, 2022
aa. Emergency Overflow Plan – View 2 (pg C-4.9), prepared by Alliant, dated April 25, 2022
bb. Emergency Overflow Plan – View 3 (pg C-4.10), prepared by Alliant, dated April 25, 2022
cc. Overall Stormwater Pollution Prevention Plan (pg C-5.0), prepared by Alliant, dated April 25, 2022
dd. SWPPP Notes 1-2 (pg C-5.1-C-5.2), prepared by Alliant, dated April 25, 2022
ee. Stormwater Management Plan – Existing (pg C-5.3), prepared by Alliant, dated April 25, 2022
ff. Stormwater Management Plan – Proposed (pg C-5.4), prepared by Alliant, dated April 25, 2022
gg. Overall Utility Plan (pg C-6.0), prepared by Alliant, dated April 25, 2022
hh. Utility Plan – View 1 (pg C-6.1), prepared by Alliant, dated April 25, 2022
ii. Utility Plan – View 2 (pg C-6.2), prepared by Alliant, dated April 25, 2022
jj. Utility Plan – View 3 (pg C-6.3), prepared by Alliant, dated April 25, 2022
kk. Utility Plan & Profile – Oak Ridge Drive – View 1 (pg C-6.4), prepared by Alliant, dated April 25, 2022
ll. Utility Plan & Profile – Oak Ridge Drive – View 2 (pg C-6.5), prepared by Alliant, dated April 25, 2022
mm. Landscape Overlay Plan – View 1 (pg C-6.4), prepared by Alliant, dated April 25, 2022
nn. Landscape Overlay Plan – View 2 (pg C-6.5), prepared by Alliant, dated April 25, 2022
oo. Detail Sheet 1 (pg C-7.0), prepared by Alliant, dated April 25, 2022
pp. Detail Sheet 2 (pg C-7.1), prepared by Alliant, dated April 25, 2022
qq. Detail Sheet 3 (pg C-7.2), prepared by Alliant, dated April 25, 2022
rr. Basin Detail Sheet 1 (pg C-7.3), prepared by Alliant, dated April 25, 2022
ss. Basin Detail Sheet 2 (pg C-7.4), prepared by Alliant, dated April 25, 2022
tt. Overall Tree Preservation and Removal Plan (pg L-1.0), prepared by Alliant, dated April 25, 2022
uu. Tree Preservation and Removal Plan – View 1 (pg L-1.1), prepared by Alliant, dated April 25, 2022
vv. Tree Preservation and Removal Plan – View 2 (pg L-1.2), prepared by Alliant, dated April 25, 2022
ww. Tree Preservation and Removal Plan – View 3 (pg L-1.3), prepared by Alliant, dated April 25, 2022
xx. Tree Inventory (pgs L-1.4-L-1.5), prepared by Alliant, dated April 25, 2022
yy. Overall Landscape Plan (pg L-2.0), prepared by Alliant, dated April 25, 2022
zz. Landscape Plan – View 1 (pg L-2.1), prepared by Alliant, dated April 25, 2022
aaa. Landscape Plan – View 2 (pg L-2.2), prepared by Alliant, dated April 25, 2022
bbb. Landscape Plan – View 3 (pg C-2.3), prepared by Alliant, dated April 25, 2022
ccc. Landscape Details (pg L-3.0), prepared by Alliant, dated April 25, 2022
ddd. Electrical Site Plan – View 1 (pg E100S), prepared by Ring & Duchateau, dated March 28, 2022
eee. Electrical Site Plan – View 2 (pg E101S), prepared by Ring & Duchateau, dated March 28, 2022
fff. Electrical Site Plan – View 3 (pg E103S), prepared by Ring & Duchateau, dated March 28, 2022
ggg. Electrical Photometric Plan – View 1 (pg E201S), prepared by Ring & Duchateau, dated March 28, 2022
hhh. Electrical Photometric Plan – View 2 (pg E202S), prepared by Ring & Duchateau, dated March 28, 2022
iii. Electrical Photometric Plan – View 3 (pg E203S), prepared by Ring & Duchateau, dated March 28, 2022
jjj. Site Lighting Fixtures (pg E600S), prepared by Ring & Duchateau, dated September 27, 2019
kkk. Site Details and Panel Schedules (pg E601S), prepared by Ring & Duchateau, dated March 28, 2022
lll. Costco – Civil Title Sheet (pg C0.1), prepared by Landform, dated October 6, 2021

mmm. Costco – Existing Conditions (pg C1.1), prepared by Landform, dated October 6, 2021
nnn. Costco – Interim Conditions (pg C1.2), prepared by Landform, dated October 6, 2021
ooo. Costco – Site Plan (pg C2.0), prepared by Landform, dated October 6, 2021
ppp. Costco – Grading, Drainage, Paving, and Erosion & Sediment Control – Overall (pg C3.0-C3.1), prepared by Landform, dated October 6, 2021
qqq. Costco – Utilities Overall (C4.0-C4.1), prepared by Landform, dated October 6, 2021
rrr. Costco - Civil Construction Details (C7.1-7.3), prepared by Landform, dated October 6, 2021
sss. Costco - Overall Landscape Plan (pg L1.0), prepared by Kimley Horn, undated
ttt. Costco – Detailed Landscape Plan (pg L1.1-1.5), prepared by Kimley Horn, undated
uuu. Costco – Landscape Notes and Details (pg L2.0-2.1), prepared Kimley Horn, undated
vvv. Costco – Preliminary Site Sections From Hazeltine Blvd, prepared by MG2, dated September 30, 2021
www. Costco – Preliminary Site Plan, prepared by MG2, dated October 1, 2021
xxx. Costco – Preliminary Site Sections, prepared by MG2, dated October 3, 2021
yyy. Costco – Property Boundary, prepared by MG2, dated October 5, 2021
zzz. Costco – Preliminary Warehouse Elevations (pgs 1-2), prepared by MG2, dated October 5, 2021
aaaa. Costco - Entry Canopy Perspective, prepared by MG2, dated October 5, 2021
bbbb. Costco - Northeast Perspective, prepared by MG2, dated October 5, 2021
cccc. Costco - Southwest Perspective, prepared by MG2, dated October 5, 2021
dddd. Costco - Context/Detailing, prepared by MG2, dated October 5, 2021
eeee. Costco - Preliminary Fuel Elevations, prepared by MG2, dated October 5, 2021
ffff. Continental – Cover Sheet, prepared by Kahler Slater, dated October 1, 2021
gggg. Contemporary Scheme (pgs 1-2), prepared by Kahler Slater, dated October 1, 2021
hhhh. Craftsman Scheme (pgs 1-2), prepared by Kahler Slater, dated October 1, 2021
iiii. Ranch Scheme (pgs 1-2), prepared by Kahler Slater, dated October 1, 2021
jjjj. Prairie Scheme (pgs 1-2), prepared by Kahler Slater, dated October 1, 2021
kkkk. Traffic Impact Study (pgs 1-38), prepared by Alliant, dated September 3, 2021

2. Adherence with the City Engineer's Memo dated November 10, 2021.
3. Prior to final plat and site plan submittals approval of a storm water management plan meeting City, State, and Carver County WMO standards is required.
4. Preservation of the wooded steep slopes, including 30-foot buffer and a 50-foot setback from that wooded steep slope.
5. Provision that the Costco building's loading dock is fully screened from public right-of-way via architectural walls and/or heavy landscaping and berming.
6. Provision that Section 15.28 Special Regulations of the zoning ordinance is complied with in full.
7. Provision that a Conditional Use Permit (CUP) is obtained if a parking ramp is pursued on any lots.
8. Provision that all light poles shall not exceed 35 feet in height on the Costco site.
9. Provision that proposed freestanding signs meet 10 foot setbacks from internal property lines, and 15 foot setback from Highway 41 right-of-way.
10. Provision that full face brick is provided on the multi-family buildings.
11. Provision that sliver of city land near northwest corner of the TH 41 roundabout is acquired into the development area, and a purchase agreement is executed prior to final plat recording.
12. Provision that a fully signed MnDOT agreement for the roundabout and highway improvements is obtained prior to final plat recording.
13. Provision that all State, County, Local permit approvals will be necessary along with financial sureties all of which are subject to agreements with agencies prior to grading work occurring.
14. The wetland mitigation plan must be approved and executed with state agencies for wetland being mitigated within the development as well as any mitigation required within the MnDOT right of way prior to a grading permit.

15. Provision that gravity sanitary sewer and water main connections will need to be coordinated with City utility departments, and the developer will need to secure all MnDOT, and City plan approvals and permits for public utilities within the MnDOT right of way prior to a grading permit.
16. All infrastructure within the development is to be owned and maintained privately, and the Declaration of Construction, Operation and Reciprocal easements for the internal ring road will require a joint maintenance access agreement with all landowner parties pending City and or MnDOT approval.
17. Compliance with the City's comprehensive water plan requirements are to be met including any permitting approvals in regards to underground tank facilities.
18. Prior to final plat recording, developer shall enter into an agreement with the City and State for the provision of necessary infrastructure and associated development costs.
19. Provision of a clearly defined and appropriately landscaped pedestrian ways between the various lots.
20. Provision of a trail on the north edge of the site connecting to Highway 41 consistent with the City's Comprehensive Plan.
21. Provision that no CIC platting can occur on Continental's multi-family site.
22. Provision that the Conference Center building shall come in for future approvals (Preliminary site & building plan, final site & building plan, rezoning, etc) when an end user is identified.
23. Provision that the Continental's site signage does not contain internal illumination per the approving Ordinance (PMD-22).
24. Provision that business center signs do not exceed 300 square feet per the approving Ordinance (PMD-22).
25. Provision that the developer provide a construction communication plan containing specific notification plans of the effected property owners for mailings, social media outreach, emails, stakeholder meetings, and community surveys and to be accepted by City Staff prior to distribution and roundabout construction.
26. Provision that the developer provide a construction communication plan for the roundabout project to the effected properties that includes but not limited to project details, construction staging and schedule, detour routes, traffic impacts, business and community outreach, construction updates, and coordination with state and county agencies to be accepted by City Staff prior to distribution and roundabout construction work occurring.

OAK KNOLL SECOND ADDITION

PLAT FILE NO.
R.T. DOC. NO.
C.R. DOC. NO.

KNOW ALL PERSONS BY THESE PRESENTS: That RCS – RCA OAK RIDGE, LLC, a Minnesota Limited Liability Company, fee owner of the following described property situated in the City of Waconia, County of Carver, State of Minnesota:

Real property in the City of Chaska, County of Carver, State of Minnesota, described as follows:

TORRENS PROPERTY

That part of Lot 1, Block 1, OAK KNOLL, lying within Tract A, REGISTERED LAND SURVEY NO. 76, according to the recorded plat thereof.

ABSTRACT PROPERTY

Lot 1, Block 1, OAK KNOLL, except that part lying within Tract A, REGISTERED LAND SURVEY NO. 76, according to the recorded plat thereof.

AND

Lot 2, Block 1, OAK KNOLL

AND

Outlot B, OAK KNOLL

Has caused the same to be surveyed and platted as OAK KNOLL SECOND ADDITION and does hereby dedicate to the public for public use the public way and the drainage and utility easements as created by this plat.

In witness whereof said RCS – RCA OAK RIDGE, LLC, a Minnesota Limited Liability Company, has caused these presents to be signed by its proper officer this _____ day of _____, 20___.

Signed: RCS – RCA OAK RIDGE, LLC, a Minnesota Limited Liability Company

By: _____, its _____

_____

_____

STATE OF _____
COUNTY OF _____

This instrument was acknowledged before me on this _____ day of _____ , 20___, by _____,

_____ of RCS – RCA OAK RIDGE, LLC, LLC, a Minnesota Limited Liability Company, on behalf of the company.

_____

_____

Notary Public _____ County, _____

My commission expires _____

I Eric Roeser do hereby certify that this plat was prepared by me or under my direct supervision; that I am a duly Licensed Land Surveyor in the State of Minnesota; that this plat is a correct representation of the boundary survey; that all mathematical data and labels are correctly designated on this plat; that all monuments depicted on this plat have been, or will be correctly set within one year; that all water boundaries and wet lands, as defined in Minnesota Statutes, Section 505.01, Subd. 3, as of the date of this certificate are shown and labeled on this plat; and all public ways are shown and labeled on this plat.

Dated this _____, day of _____, 20___.

_____
Eric Roeser, Licensed Land Surveyor
Minnesota License No. 47476

STATE OF MINNESOTA
COUNTY OF _____

This instrument was acknowledged before me on this _____ day of _____ , 20___, by Eric Roeser, Licensed Land Surveyor.

_____

_____

Notary Public _____ County, _____

My commission expires _____

CITY COUNCIL, CITY OF CHASKA, MINNESOTA

This plat was approved by the City Council of the City of Chaska, Minnesota, this _____ day of _____, 20___, and hereby certifies compliance with all requirements as set forth in Minnesota Statutes, Section 505.03, Subd. 2.

Signed: _____ Mayor

Signed: _____ Clerk

COUNTY SURVEYOR, CARVER COUNTY, MINNESOTA

Pursuant to Chapter 395, Minnesota Laws of 1971, this plat has been approved this _____ day of _____, 20___.

Brian E. Praske, County Surveyor

By: _____

COUNTY AUDITOR, CARVER COUNTY, MINNESOTA

I hereby certify that taxes payable in _____ and prior years have been paid for land described on this plat. Dated this _____ day of _____, 20____.

Crystal Campos, County Auditor

By: _____

COUNTY RECORDER, CARVER COUNTY, MINNESOTA

I hereby certify that this plat of OAK KNOLL SECOND ADDITION was filed this ____ day of _____, 20____, at _____ o'clock ___. M. as Document No._____.

Kaaren Lewis, County Recorder

By: _____

Egan, Field & Nowak, Inc.
land surveyors since 1872

OAK KNOLL SECOND ADDITION

PLAT FILE NO.
R.T. DOC. NO.
C.R. DOC. NO.

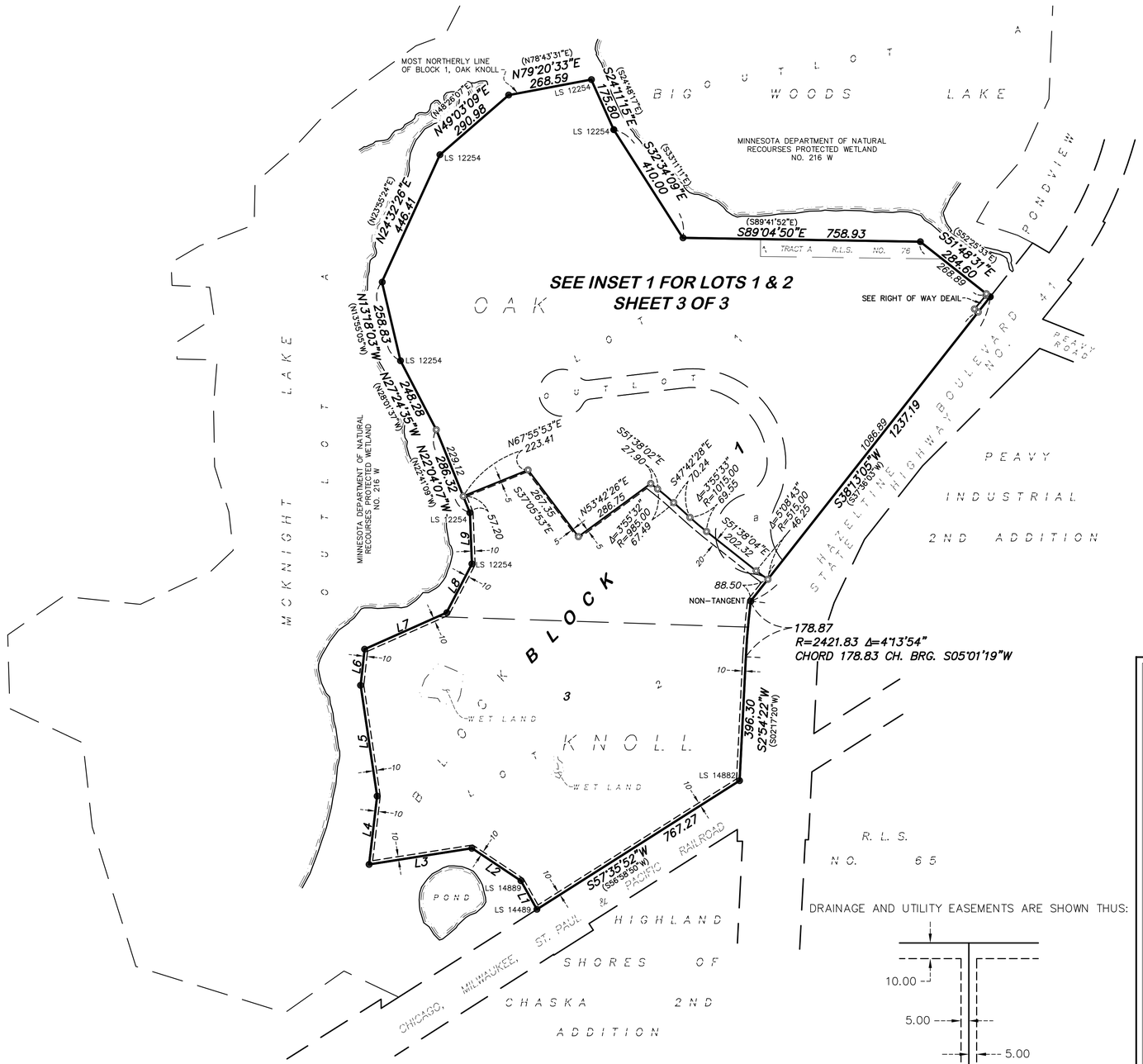

LINE TABLE				
Line #	DISTANCE	BEARING	PLAT BEARING	PLAT DISTANCE
L1	104.57	N29°06'43"W	(N29°43'45"W)	
L2	187.87	N56°27'32"W	(N57°04'34"W)	
L3	332.90	S81°07'06"W	(S80°30'04"W)	
L4	219.53	N06°41'29"E	(N06°04'27"E)	
L5	357.85	N08°26'30"W	(N09°03'32"W)	
L6	116.25	N06°16'57"E	(N05°39'55"E)	(115.94)
L7	286.41	N66°00'06"E	(N65°23'04"E)	(287.67)
L8	175.73	N27°35'54"E	(N26°58'52"E)	
L9	163.61	N02°16'22"W	(N02°53'24"W)	

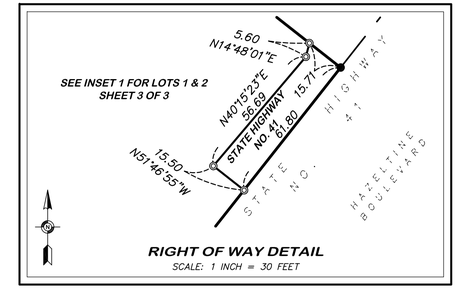

RIGHT OF WAY DETAIL
SCALE: 1 INCH = 30 FEET

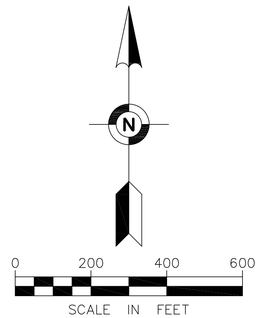

The most northerly line of Block 1, OAK KNOLL is assumed to bear North 79 degrees 20 minutes 33 seconds East.

- ● DENOTES FOUND OPEN 1/2 INCH IRON PIPE MONUMENT, LICENSE NUMBER, IF AVAILABLE IS NOTED
- ◎ DENOTES SET 5/8 INCH BY 14 INCH LONG IRON REBAR MARKED BY LICENSE NO. 47476
- (N00°00'00"E) RECORD BEARING PER THE PLAT OF OAK KNOLL
- (XXX.XX) RECORD DISTANCE PER THE PLAT OF OAK KNOLL

DRAINAGE AND UTILITY EASEMENTS ARE SHOWN THUS:

BEING 5 FEET IN WIDTH, AND ADJOINING SIDE LOT LINES, AND BEING 10 FEET IN WIDTH AND ADJOINING STREET LINES AS SHOWN ON THE PLAT, UNLESS OTHERWISE INDICATED.
NOT TO SCALE

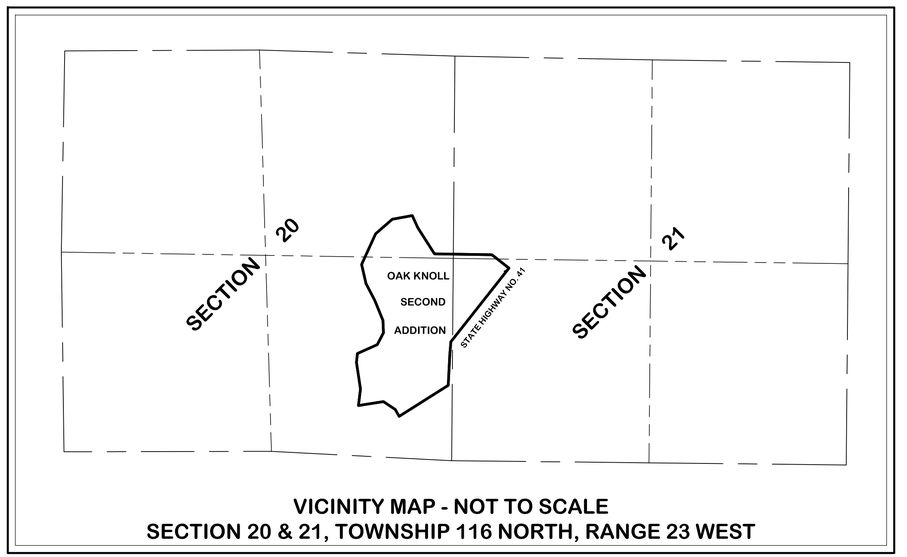

VICINITY MAP - NOT TO SCALE
SECTION 20 & 21, TOWNSHIP 116 NORTH, RANGE 23 WEST

Egan, Field & Nowak, Inc.
land surveyors since 1872

OAK KNOLL SECOND ADDITION

INSET 1

PLAT FILE NO.
R.T. DOC. NO.
C.R. DOC. NO.

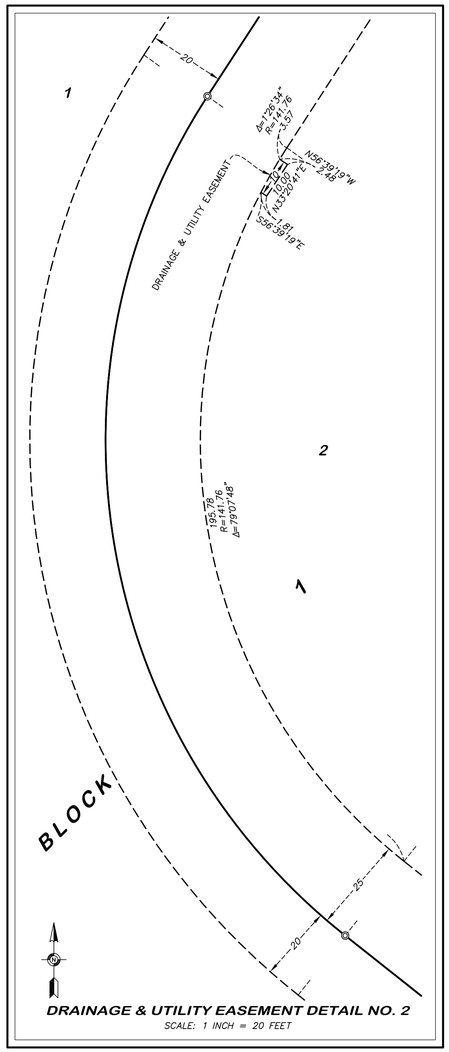

DRAINAGE & UTILITY EASEMENT DETAIL NO. 2

SCALE: 1 INCH = 20 FEET

DRAINAGE AND UTILITY EASEMENTS ARE SHOWN THUS:

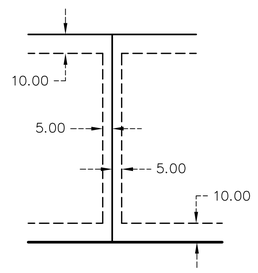

BEING 5 FEET IN WIDTH, AND ADJOINING SIDE LOT LINES, AND BEING 10 FEET IN WIDTH AND ADJOINING STREET LINES AS SHOWN ON THE PLAT, UNLESS OTHERWISE INDICATED.
NOT TO SCALE

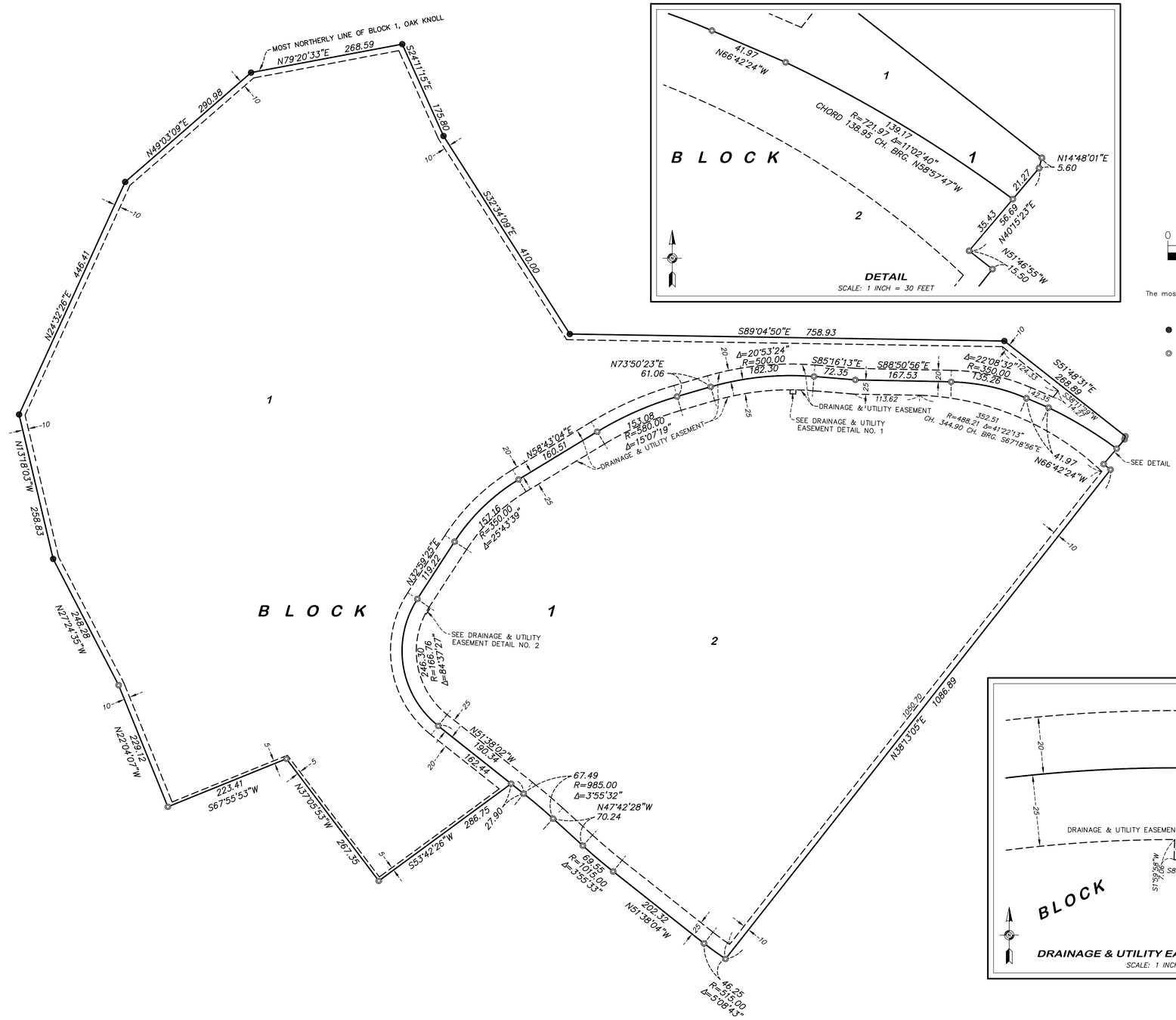

DETAIL

SCALE: 1 INCH = 30 FEET

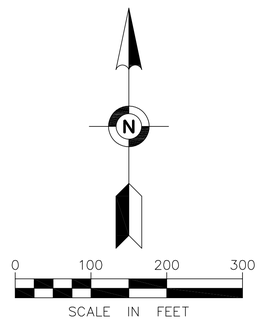

The most northerly line of Block 1, OAK KNOLL is assumed to bear North 79 degrees 20 minutes 33 seconds East.

● DENOTES FOUND OPEN 1/2 INCH IRON PIPE MONUMENT, LICENSE NUMBER, IF AVAILABLE IS NOTED

◎ DENOTES SET 5/8 INCH BY 14 INCH LONG IRON REBAR MARKED BY LICENSE NO. 47476

DRAINAGE & UTILITY EASEMENT DETAIL NO. 1

SCALE: 1 INCH = 20 FEET

Egan, Field & Nowak, Inc.
land surveyors since 1872

SHEET 3 OF 3

OAK RIDGE COMMONS

HWY #41 & PEAVEY RD
CHASKA, MN

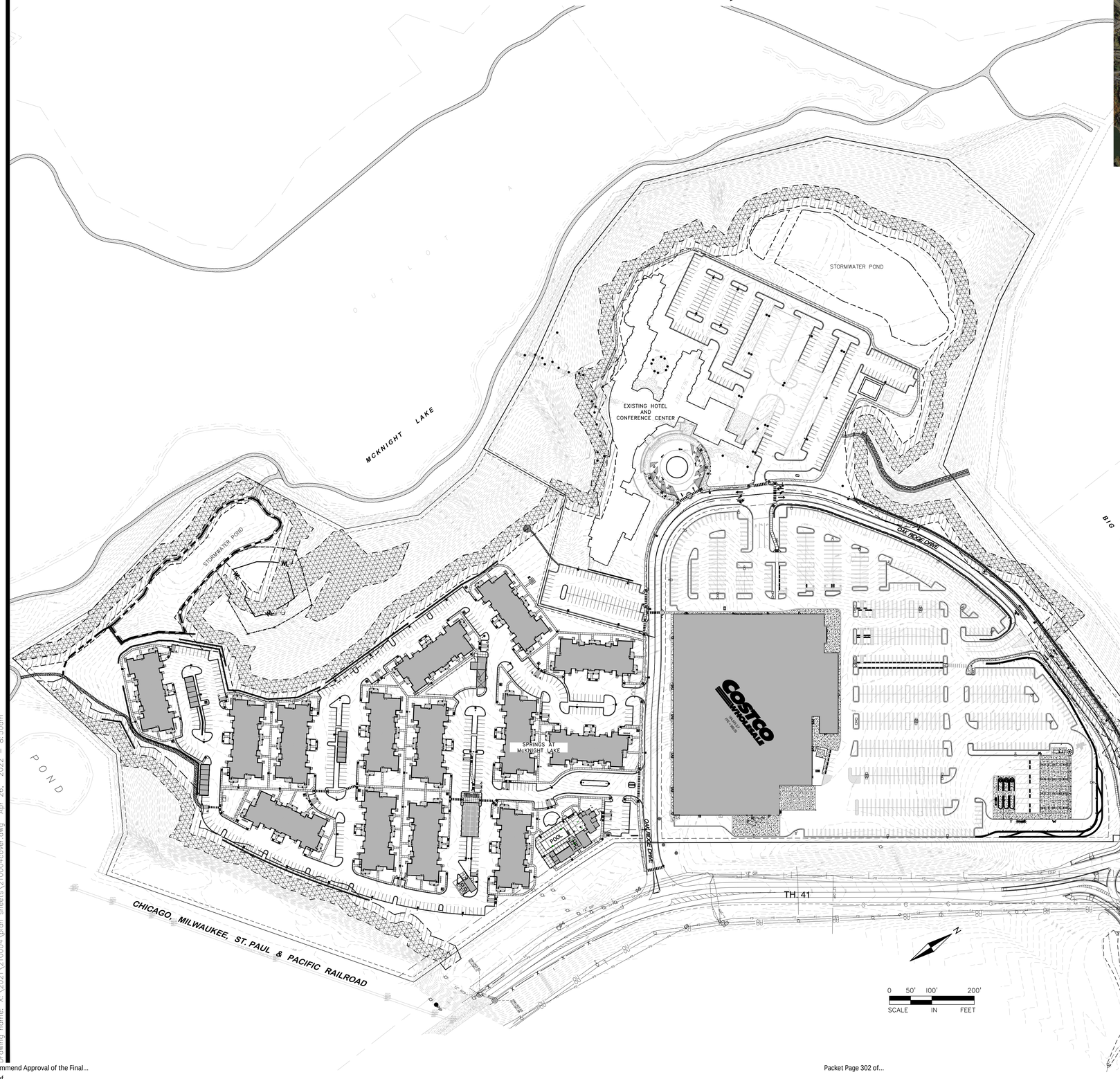



SITE VICINITY MAP

SHEET INDEX

NO.	SHEET TITLE
CIVIL SHEETS	
C-0.0	COVER SHEET
	ALTA / NSPS LAND TITLE SURVEY
	FINAL PLAT (SHEETS 1-3)
D-1.0	DEMOLITION PLAN
C-2.0	OVERALL INTERIM CONDITIONS
C-2.1	INTERIM CONDITIONS PLAN - VIEW 1
C-2.2	INTERIM CONDITIONS PLAN - VIEW 2
C-2.3	INTERIM CONDITIONS PLAN - VIEW 3
C-3.0	OVERALL SITE PLAN
C-3.1	SITE PLAN - VIEW 1
C-3.2	SITE PLAN - VIEW 2
C-3.3	SITE PLAN - VIEW 3
~~C-3.4~~	~~SIGNAGE PLAN~~
C-3.5	SNOW STORAGE PLAN
C-3.6	PEDESTRIAN CIRCULATION PLAN
C-3.7	OPEN SPACE PLAN
C-3.8	FIRE TRUCK MOVEMENT PLAN
C-3.9	PAVEMENT PLAN
C-4.0	OVERALL GRADING PLAN
C-4.1	GRADING PLAN - VIEW 1
C-4.2	GRADING PLAN - VIEW 2
C-4.3	GRADING PLAN - VIEW 3
C-4.4	GRADING PLAN - SPRINGS ENLARGEMENT PLAN 1
C-4.5	GRADING PLAN - SPRINGS ENLARGEMENT PLAN 2
C-4.6	GRADING PLAN - SPRINGS ENLARGEMENT PLAN 3
C-4.7	OVERALL EMERGENCY OVERFLOW PLAN
C-4.8	EMERGENCY OVERFLOW PLAN - VIEW 1
C-4.9	EMERGENCY OVERFLOW PLAN - VIEW 2
C-4.10	EMERGENCY OVERFLOW PLAN - VIEW 3
C-5.0	OVERALL STORM WATER POLLUTION PREVENTION PLAN (SWPPP)
C-5.1	SWPPP NOTES 1
C-5.2	SWPPP NOTES 2
C-5.3	STORMWATER MANAGEMENT PLAN - EXISTING
C-5.4	STORMWATER MANAGEMENT PLAN - PROPOSED
C-6.0	OVERALL UTILITY PLAN
C-6.1	UTILITY PLAN - VIEW 1
C-6.2	UTILITY PLAN - VIEW 2
C-6.3	UTILITY PLAN - VIEW 3
C-6.4	UTILITY PLAN & PROFILE - OAK RIDGE DRIVE - VIEW 1
C-6.5	UTILITY PLAN & PROFILE - OAK RIDGE DRIVE - VIEW 2
C-6.6	LANDSCAPE OVERLAY PLAN - VIEW 2
C-6.7	LANDSCAPE OVERLAY PLAN - VIEW 3
C-7.0	DETAIL SHEET 1
C-7.1	DETAIL SHEET 2
C-7.2	DETAIL SHEET 3
C-7.3	BASIN DETAIL SHEET 1
C-7.4	BASIN DETAIL SHEET 2
L-1.0	OVERALL TREE PRESERVATION AND REMOVAL PLAN
L-1.1	TREE PRESERVATION REMOVAL PLAN - VIEW 1
L-1.2	TREE PRESERVATION REMOVAL PLAN - VIEW 2
L-1.3	TREE PRESERVATION REMOVAL PLAN - VIEW 3
L-1.4	TREE INVENTORY
L-1.5	TREE INVENTORY
L-2.0	OVERALL LANDSCAPE PLAN
L-2.1	LANDSCAPE PLAN - VIEW 1
L-2.2	LANDSCAPE PLAN - VIEW 2
L-2.3	LANDSCAPE PLAN - VIEW 3
L-3.0	LANDSCAPE DETAILS
E100S	ELECTRICAL SITE PLAN - VIEW 1
E101S	ELECTRICAL SITE PLAN - VIEW 2
E103S	ELECTRICAL SITE PLAN - VIEW 3
E201S	ELECTRICAL PHOTOMETRIC PLAN - VIEW 1
E202S	ELECTRICAL PHOTOMETRIC PLAN - VIEW 2
E203S	ELECTRICAL PHOTOMETRIC PLAN - VIEW 3
E600S	SITE LIGHTING FIXTURES
E601S	SITE DETAILS AND PANEL SCHEDULES

OWNER REPRESENTATIVE
WILLY BOULAY
LS BLACK DEVELOPMENT
EM: wboulay@lsblack.com
1959 SLOAN PL, SUITE 220,
SAINT PAUL, MN 55117

SURVEYOR
ERIC ROSER
EFN
475 OLD HIGHWAY 8 NW
SUITE 200
NEW BRIGHTON, MN 55112
EM: eroeser@efnsurvey.com
PH: 612-466-3379

CONSULTANT
ALLIANT ENGINEERING, INC.
733 MARQUETTE AVE STE 700
MINNEAPOLIS, MN 55402-2340
PH: 612-758-3080 / FX: 612-758-3099

CIVIL ENGINEER
CLARK WICKLUND
LICENSE NO. 40922
EM: cwicklund@alliant-inc.com

LANDSCAPE ARCHITECT
MARK KRONBECK, PLA, ASLA
LICENSE NO. 26222
EM: mkronbeck@alliant-inc.com

ALLIANT
733 Marquette Avenue
Suite 700
Minneapolis, MN 55402
612.758.3080
www.alliant-inc.com

OAK RIDGE COMMONS
PLANNED UNIT DEVELOPMENT SUBMITTAL
HWY 41 & PEAVEY ROAD
CHASKA, MN

COVER SHEET

I hereby certify that this plan, specification, or report was prepared by me or under my direct supervision and that I am a duly Licensed PROFESSIONAL ENGINEER under the laws of the State of MINNESOTA

CLARK WICKLUND, PE

4-25-22 — Date
40922 — License No.

QUALITY ASSURANCE/CONTROL

BY DATE

DATE	ISSUE
9-7-21	PUD RESUBMITTAL
9-30-21	PROGRESS
10-11-21	PUD RESUBMITTAL
10-22-21	CITY COMMENTS
10-26-21	CITY COMMENTS
11-17-21	CCWMO RESUBMITTAL
11-17-21	BID SET
1-10-22	SIGNAGE UPDATE
2-1-22	PUD RESUBMITTAL
3-15-22	LANDSCAPE PLAN UPDATE
3-28-22	CONSTRUCTION DOCUMENTS
4-25-22	CITY & COUNTY COMMENTS

PROJECT TEAM DATA
DESIGNED: MK
DRAWN: MLS
PROJECT NO: 221-0004

C-0.0

Drawing name: X:\2021\210004\plan sheets\210004cover.dwg Apr 26, 2022 - 8:50am

ALTA/NSPS LAND TITLE SURVEY FOR:
Atkinson Holdings, LLC

SURVEY ITEMS PER SCHEDULE B:

Per Commitment for Title Insurance prepared by First American Title Insurance Company National Commercial Services, Commitment No. NCS–937489–MPLS dated April 9, 2019 at 8:00 am (Contains additional lands)

ITEM 16: Limitation of Access to State Trunk Highway No. 41, and rights incidental thereto, in favor of the State of Minnesota, as indicated by the following documents:

a) Final Certificate dated February 7, 1968, recorded March 25, 1968 in the office of the County Recorder, as Document No. 3624, in Book 7 of Misc., Page 429;

b) Amended Final Certificate dated January 31, 1985, recorded March 17, 1985 in the office of the County Recorder as Document No. 70129;

c) Quit Claim Deed–Easement dated July 26, 1990, recorded October 25, 1990, in the office of the County Recorder as Document No. 119000, and recorded October 25, 1990, in the office of the Registrar of Titles as Document No. 166895.

(Parcel 4)

Said limitation of access affects the surveyed property and is depicted hereon.

ITEM 17: Easements, and rights incidental thereto, in favor of City of Chaska, created in Easement dated August 18, 1975, recorded August 26, 1975, in the office of the County Recorder as Document No. 26590 in Book 123 of Deeds, Page 242. (Parcels 1, 4)

Said easement does not affect the surveyed property and is not depicted hereon.

ITEM 18: Easements, and rights incidental thereto, in favor of City of Chaska, created in Easement dated August 18, 1975, recorded August 26, 1975, in the office of the County Recorder as Document No. 26594 in Book 123 of Deeds, Page 262. (Parcels 3, 4)

Said easement does not affect the surveyed property and is not depicted hereon.

ITEM 19: Easements, and rights incidental thereto, in favor of City of Chaska, created in Easement dated August 18, 1975, recorded August 26, 1975, in the office of the County Recorder as Document No. 26597 in Book 123 of Deeds, Page 278. (Parcels 1, 3, 4)

Said easement (as depicted on the plat of OAK KNOLL) affects the surveyed property and is depicted hereon.

ITEM 20: Easements shown on the plat of Haasken Addition, recorded January 29, 1982, in the office of the County Recorder, as Document No. 53853. (Parcel 2)

Said easement does not affect the surveyed property and is not depicted hereon.

ITEM 21: Easements and Limitation of Access to State Highway No. 41, as shown on the plat of Oak Knoll, recorded March 21, 1988, in the office of the County Recorder as Document No. 94556, and recorded March 21, 1988, in the office of the Registrar of Titles, as Document No. T56063, as corrected by Land Surveyor's Certificate of Correction to the plat of Oak Knoll dated September 20, 1988, recorded February 15, 1989, in the office of the County Recorder as Document No. 103346, and recorded February 15, 1989, in the office of the Registrar of Titles as Document No. T60076. (Parcel 4)

Said easements and limitation of access affect the surveyed property and are depicted hereon.

ITEM 22: Terms and conditions of Declaration of Covenants and Restrictions dated March 21, 1988, recorded April 5, 1988, in the office of the County Recorder as Document No. 94919, and recorded April 5, 1988, in the office of the Registrar of Titles as Document No. T56240; as affected by Acknowledgement of Continuation of Declaration of Covenants and Restrictions dated September 7, 1988, recorded September 13, 1988, in the office of the County Recorder as Document No. 99350, and recorded September 13, 1988, in the office of the Registrar of Titles as Document No. T58319. (Parcel 4)

NOTE: Torrens document nos. shown above are not shown as memorials on the certificate of title of Lot 1, Block 1, Oak Knoll.

Said terms and conditions affect the surveyed property. No plottable items to depict.

ITEM 23: Terms and conditions of Declaration of Covenants, Easements, Restrictions and Right of First Refusal dated September 7, 1988, recorded September 13, 1988, in the office of the County Recorder as Document No. 99351, and recorded September 13, 1988, in the office of the Registrar of Titles as Document No. T58320. (Parcel 4)

NOTE: Torrens document no. shown above is not shown as a memorial on the certificate of title of Lot 1, Block 1, Oak Knoll.

Said terms and conditions affect the surveyed property. The "City Property" (Outlot A, Oak Knoll) is depicted hereon.

ITEM 24: Covenants and restrictions created in Warranty Deed dated September 7, 1988, recorded September 13, 1988, in the office of the County Recorder as Document No. 99352, and recorded September 13, 1988, in the office of the Registrar of Titles as Document No. T58321; as affected by Certificate of Completion dated August 22, 1990, recorded October 25, 1990, in the office of the County Recorder as Document No. 118998, and recorded August 25, 1990, in the office of the Registrar of Titles as Document No. T66894. (Parcel 4)

ITEM 25: Easements for public roadway, drainage and utility, in favor of City of Chaska, created in Quit Claim Deed dated October 28, 1988, recorded October 28, 1988, in the office of the County Recorder, as Document No. 100564, as modified and re-recorded November 23, 1988, in the office of the County Recorder as Document No. 101377, as modified by Resolution No. 90–76, which evidences the vacation of Outlot B, Oak Knoll Addition, which Resolution is dated June 4, 1990, recorded September 5, 1990, in the office of the County Recorder as Document No. 117570, and also recorded October 25, 1990, in the office of the County Recorder as Document No. 118999. (Parcel 4)

Said easement for public roadway appears to have been vacated. Said easement for drainage and utility affects the surveyed property and is depicted hereon.

ITEM 26: Certification by County Assessor recorded October 28, 1988, in the office of the County Recorder as Document No. 100565, and recorded October 28, 1988, in the office of the Registrar of Titles as Document No. T58864. (Parcel 4)

ITEM 27: Easement for McKnight Boulevard, as shown on County Maps, and as laid out and traveled. (Parcels 1 and 3)

Said easement does not affect the surveyed property and is not depicted hereon.

ITEM 28: County maps indicate portions of the Land may be affected by certain lakes. For any property which lies within or abuts a lake, the following issues would be applicable, to wit:
Rights of the United States of America, the State of Minnesota, the County of Carver, and/or the public, in any portion of the Land lying within a lake;
Riparian rights incident to lake;
Matters, if any, arising as a result of the fact that the boundary of the Land along a lake is not a fixed line and will move.

NOTE: State of Minnesota Department of Natural Resources, Approval of Names of Geographic Features, dated August 8, 1988, recorded April 16, 1998, in the office of the County Recorder as Document No. 225486 refers to certain lakes which may affect portions of the Land.
(Parcels 1, 2, 4)

The surveyed property at the time of the field survey does not lie within or adjoin McKnight Lake.

LINE TABLE				
Line #	DISTANCE	BEARING	PLAT BEARING	PLAT DISTANCE
L1	104.57	N29°06'43"W	(N29°43'45"W)	
L2	187.87	N56°27'32"W	(N57°04'34"W)	
L3	332.90	S81°07'06"W	(S80°30'04"W)	
L4	219.53	N06°41'29"E	(N06°04'27"E)	
L5	357.85	N08°26'30"W	(N09°03'32"W)	
L6	116.25	N06°16'57"E	(N05°39'55"E)	(115.94)
L7	286.41	N66°00'06"E	(N65°23'04"E)	(287.67)
L8	175.73	N27°35'54"E	(N26°58'52"E)	
L9	163.61	N02°16'22"W	(N02°53'24"W)	

0 200 400 600
SCALE IN FEET

- ● FOUND IRON MONUMENT
- ○ SET IRON MONUMENT MARKED WITH LICENSE NUMBER 47476



SEE SHEET 2 THROUGH SHEET 6 FOR SITE IMPROVEMENTS

LEGAL DESCRIPTION:

Per Commitment for Title Insurance prepared by First American Title Insurance Company National Commercial Services, Commitment No. NCS–937489–MPLS dated April 9, 2019 at 8:00 am

PARCEL 4:

LOTS 1 AND 2, BLOCK 1, AND OUTLOT B, OAK KNOLL, ACCORDING TO THE RECORDED PLAT THEREOF, CARVER COUNTY, MINNESOTA.

(ABSTRACT AND TORRENS PROPERTY–CERTIFICATE OF TITLE NO. 34021.0)

PARCEL 4A:

NONEXCLUSIVE APPURTENANT EASEMENTS FOR PEDESTRIAN ACCESS TO BIKE TRAIL, SURFACE WATER DRAINAGE AND UNDERGROUND PIPES TO CONNECT TO EXISTING UNDERGROUND UTILITIES, WHICH BENEFIT LOTS 1 AND 2, BLOCK 1, OF PARCEL 4, CREATED IN THAT CERTAIN DECLARATION OF COVENANTS, EASEMENTS, RESTRICTIONS AND RIGHT OF FIRST REFUSAL DATED SEPTEMBER 7, 1988, RECORDED SEPTEMBER 13, 1988, IN THE OFFICE OF THE COUNTY RECORDER, AS DOCUMENT NO. 99351, AND RECORDED SEPTEMBER 13, 1988, IN THE OFFICE OF THE REGISTRAR OF TITLES AS DOCUMENT NO. T58320.

(Commitment for Title Insurance contains additional lands)

GENERAL SURVEY NOTES:

1. The orientation of this bearing system is based on the Carver County coordinate grid (NAD 83–2011 Adj.).
2. The legal description and easement information used in the preparation of this survey is based on the Commitment for Title Insurance prepared by First American Title Insurance Company National Commercial Services, Commitment No. NCS–937489–MPLS dated April 9, 2019 at 8:00 am. (Contains additional lands)

OPTIONAL TABLE A ITEMS:

1. Monuments have been placed at all major corners of the property described hereon, unless already marked or referenced by existing monuments or witnesses in close proximity to the corner.
2. The address of the property described hereon is 1 Oak Ridge Drive, Chaska Minnesota 55318.
3. The property described hereon lies within Flood Zone X (Area of Minimal Flood Hazard) per un–printed Federal Insurance Rate Map No. 27019 C 0228 D, dated December 21, 2018.
4. The total area of the property described hereon is 2,911,128 square feet or 66.83030 acres.
5. The contours depicted hereon are per elevation data collected while conducting the fieldwork and LIDAR Data per the Minnesota Department of Natural Resources. The contour interval is 1 foot.

   BENCHMARK: Top of Minnesota Department of Transportation Geodetic Monument "HAZE" GSID Station #3705 Elevation = 965.76 feet. (NAVD88)

   SITE BENCHMARK No. 1: Top nut of hydrant south of property entrance, west side of Hwy. No. 41. Elevation = 965.96 feet. (NAVD88)

   SITE BENCHMARK No. 2: Top nut of hydrant along entrance drive of property. Elevation = 971.59 feet. (NAVD88)

   SITE BENCHMARK No. 3: Top nut of hydrant east of building. Elevation = 963.52 feet. (NAVD88)

   SITE BENCHMARK No. 4: Top nut of hydrant north of building. Elevation = 957.22 feet. (NAVD88)

6a. No zoning report or letter was received from the insurer pursuant to Optional Table A Item 6(a) of Table A, as set forth in the 2016 Minimum Standard Detail Requirements for ALTA/NSPS Land Title Surveys.

7a. Exterior building dimensions are depicted hereon.

7b1. The exterior building footprint areas at ground level are depicted hereon.

7c. The measured building heights are depicted hereon.

8. Substantial features observed in the process of conducting the fieldwork are depicted hereon.

9. As of the date of this survey the property described hereon contains a total of 222 parking spaces of which 215 are standard spaces and 7 are handicapped spaces.

11. Existing utilities, services and underground structures shown hereon were located either physically, from existing records made available to us, by resident testimony, or by locations provided by Gopher State One Call, per Ticket No. 192593946. However, lacking excavation, the exact location of underground features cannot be accurately, completely and reliably depicted. Where additional or more detailed information is required, the client is advised that excavation may be necessary. Other utilities and services may be present and verification and location of all utilities and services should be obtained from the owners of the respective utilities prior to any design, planning or excavation.

13. The names of adjoining owners according to current tax records are depicted hereon.

15. The rectified orthophotography depicted hereon is per Egan, Field & Nowak Inc. aerial imagery captured on September 24, 2019.

16. As of the date of this survey there is no observable evidence of current earth moving work, building construction or building additions on the property described hereon.

19. The plottable offsite easements or servitudes disclosed in documents provided to the surveyor are depicted hereon.

CERTIFICATION:

To Atkinson Holdings, LLC, First American Title Insurance Company National Commercial Services:

This is to certify that this map or plat and the survey on which it is based were made in accordance with the 2016 Minimum Standard Detail Requirements for ALTA/NSPS Land Title Surveys, jointly established and adopted by ALTA and NSPS, and includes items 1, 2, 3, 4, 5, 6(a), 7(a), 7(b)(1), 7(c), 8, 9, 11, 13, 15, 16 and 19 of Table A thereof. The fieldwork was completed on November 22, 2019.

Date of Plat or Map: November 26, 2019

Eric A Roeser
Minnesota License No. 47476
eroeser@efnsurvey.com

ERIC A. ROESER LICENSED LAND SURVEYOR 47476 STATE OF MINNESOTA

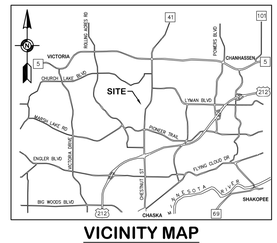

VICINITY MAP
NOT TO SCALE

FIELD BOOK	PAGE

DRAWING NAME: 38788.dwg
JOB NO. 38788
FILE NO. 5970

FIELDWORK CHIEF: TC
DRAWN BY: PMD
CHECKED BY: EAR

REVISIONS		
NO.	DATE	DESCRIPTION

ALTA/NSPS LAND TITLE SURVEY

SURVEY FOR:
Atkinson Holdings, LLC

PROPERTY ADDRESS:
1 Oak Ridge Drive
Chaska, Minnesota 55318

Egan, Field & Nowak, Inc.
land surveyors since 1872
1229 Tyler Street NE, Suite 100
Minneapolis, Minnesota 55413
PHONE: (612) 466-3300
FAX: (612) 466-3383
WWW.EFNSURVEY.COM

COPYRIGHT © 2019 By EGAN, FIELD & NOWAK, INC.

ALTA/NSPS LAND TITLE SURVEY FOR:
Atkinson Holdings, LLC



LEGEND:

- BENCHMARK
- SANITARY MANHOLE
- STORM MANHOLE
- CATCH BASIN
- CULVERT
- HYDRANT
- LIGHT
- HANDHOLE
- UTILITY POLE
- GUY WIRE
- SIGN
- GAS SIGN
- LIMITED ACCESS
- GUARDRAIL
- SANITARY SEWER
- STORM SEWER
- WATERMAIN
- UNDERGROUND TELECOMMUNICATION
- UNDERGROUND GAS
- TREELINE
- EXISTING CONTOUR LINE
- TREE
- BITUMINOUS SURFACE
- CONCRETE SURFACE
- GRAVEL SURFACE

FIELD BOOK	PAGE

DRAWING NAME: 38788.dwg
JOB NO. 38788
FILE NO. 5970

FIELDWORK CHIEF: TC
DRAWN BY: PMD
CHECKED BY: EAR

REVISIONS

NO.	DATE	DESCRIPTION

ALTA/NSPS LAND TITLE SURVEY

SURVEY FOR:
Atkinson Holdings, LLC

PROPERTY ADDRESS:
1 Oak Ridge Drive
Chaska, Minnesota 55318

Egan, Field & Nowak, Inc.
land surveyors since 1872
1229 Tyler Street NE, Suite 100
Minneapolis, Minnesota 55413
PHONE: (612) 466-3300
FAX: (612) 466-3383
WWW.EFNSURVEY.COM

COPYRIGHT © 2019 By EGAN, FIELD & NOWAK, INC.

ALTA/NSPS LAND TITLE SURVEY FOR:
Atkinson Holdings, LLC



LEGEND:

- BENCHMARK
- SANITARY MANHOLE
- STORM MANHOLE
- CATCH BASIN
- CULVERT
- HYDRANT
- AUTO SPRINKLER
- GATE VALVE
- MONITOR WELL
- ELECTRIC MANHOLE
- AIR CONDITIONER
- LIGHT
- BUILDING LIGHT
- HANDHOLE
- UTILITY POLE
- GUY WIRE
- GAS METER
- GAS SIGN
- SIGN
- HANDICAPPED PARKING SPACE
- PARKING COUNT
- FLAGPOLE
- BOLLARD
- LIMITED ACCESS
- GUARDRAIL
- SANITARY SEWER
- STORM SEWER
- WATERMAIN
- UNDERGROUND TELECOMMUNICATION
- UNDERGROUND GAS
- UNDERGROUND ELECTRIC
- TREELINE
- EXISTING CONTOUR LINE
- TREE
- BITUMINOUS SURFACE
- CONCRETE SURFACE
- GRAVEL SURFACE

FIELD BOOK	PAGE

DRAWING NAME: 38788.dwg
JOB NO. 38788
FILE NO. 5970

FIELDWORK CHIEF: TC
DRAWN BY: PMD
CHECKED BY: EAR

REVISIONS

NO.	DATE	DESCRIPTION

ALTA/NSPS LAND TITLE SURVEY

SURVEY FOR:
Atkinson Holdings, LLC

PROPERTY ADDRESS:
1 Oak Ridge Drive
Chaska, Minnesota 55318

Egan, Field & Nowak, Inc.
land surveyors since 1872
1229 Tyler Street NE, Suite 100
Minneapolis, Minnesota 55413
PHONE: (612) 466-3300
FAX: (612) 466-3383
WWW.EFNSURVEY.COM

COPYRIGHT © 2019 By EGAN, FIELD & NOWAK, INC.

SHEET 3 OF 6

ALTA/NSPS LAND TITLE SURVEY FOR:
Atkinson Holdings, LLC



0 60 120 180
SCALE IN FEET

- FOUND IRON MONUMENT
- SET IRON MONUMENT MARKED WITH LICENSE NUMBER 47476

LEGEND:

- BENCHMARK
- SANITARY MANHOLE
- STORM MANHOLE
- CATCH BASIN
- CULVERT
- HYDRANT
- AUTO SPRINKLER
- GATE VALVE
- MONITOR WELL
- ELECTRIC MANHOLE
- AIR CONDITIONER
- LIGHT
- BUILDING LIGHT
- HANDHOLE
- UTILITY POLE
- GUY WIRE
- GAS METER
- GAS SIGN
- SIGN
- HANDICAPPED PARKING SPACE
- (151) PARKING COUNT
- FLAGPOLE
- BOLLARD
- A — LIMITED ACCESS
- GUARDRAIL
- S — SANITARY SEWER
- SS — STORM SEWER
- W — WATERMAIN
- TC — UNDERGROUND TELECOMMUNICATION
- G — UNDERGROUND GAS
- E — UNDERGROUND ELECTRIC
- TREELINE
- 920 — EXISTING CONTOUR LINE
- DE OR CO — TREE
- BITUMINOUS SURFACE
- CONCRETE SURFACE
- GRAVEL SURFACE

FIELD BOOK	PAGE

DRAWING NAME: 38788.dwg
JOB NO. 38788
FILE NO. 5970

FIELDWORK CHIEF: TC
DRAWN BY: PMD
CHECKED BY: EAR

REVISIONS

NO.	DATE	DESCRIPTION

ALTA/NSPS LAND TITLE SURVEY

SURVEY FOR:
Atkinson Holdings, LLC

PROPERTY ADDRESS:
1 Oak Ridge Drive
Chaska, Minnesota 55318

Egan, Field & Nowak, Inc.
land surveyors since 1872
1229 Tyler Street NE, Suite 100
Minneapolis, Minnesota 55413
PHONE: (612) 466-3300
FAX: (612) 466-3383
WWW.EFNSURVEY.COM

COPYRIGHT © 2019 By EGAN, FIELD & NOWAK, INC.

ALTA/NSPS LAND TITLE SURVEY FOR:
Atkinson Holdings, LLC



LEGEND:

- BENCHMARK
- SANITARY MANHOLE
- STORM MANHOLE
- CATCH BASIN OR
- CULVERT
- HYDRANT
- AUTO SPRINKLER
- GATE VALVE
- MONITOR WELL MW
- ELECTRIC MANHOLE
- AIR CONDITIONER
- LIGHT
- BUILDING LIGHT
- HANDHOLE
- UTILITY POLE
- GUY WIRE
- GAS METER
- GAS SIGN
- SIGN
- HANDICAPPED PARKING SPACE
- PARKING COUNT
- FLAGPOLE
- BOLLARD
- LIMITED ACCESS
- GUARDRAIL
- SANITARY SEWER
- STORM SEWER
- WATERMAIN
- UNDERGROUND TELECOMMUNICATION
- UNDERGROUND GAS
- UNDERGROUND ELECTRIC
- TREELINE
- 920 EXISTING CONTOUR LINE
- TREE OR
- BITUMINOUS SURFACE
- CONCRETE SURFACE
- GRAVEL SURFACE

FIELD BOOK	PAGE

DRAWING NAME: 38788.dwg
JOB NO. 38788
FILE NO. 5970

FIELDWORK CHIEF: TC
DRAWN BY: PMD
CHECKED BY: EAR

REVISIONS		
NO.	DATE	DESCRIPTION

ALTA/NSPS LAND TITLE SURVEY

SURVEY FOR:
Atkinson Holdings, LLC

PROPERTY ADDRESS:
1 Oak Ridge Drive
Chaska, Minnesota 55318

Egan, Field & Nowak, Inc.
land surveyors since 1872
1229 Tyler Street NE, Suite 100
Minneapolis, Minnesota 55413
PHONE: (612) 466-3300
FAX: (612) 466-3383
WWW.EFNSURVEY.COM

COPYRIGHT © 2019 By EGAN, FIELD & NOWAK, INC.

BUILDING DETAIL

ALTA/NSPS LAND TITLE SURVEY FOR:
Atkinson Holdings, LLC

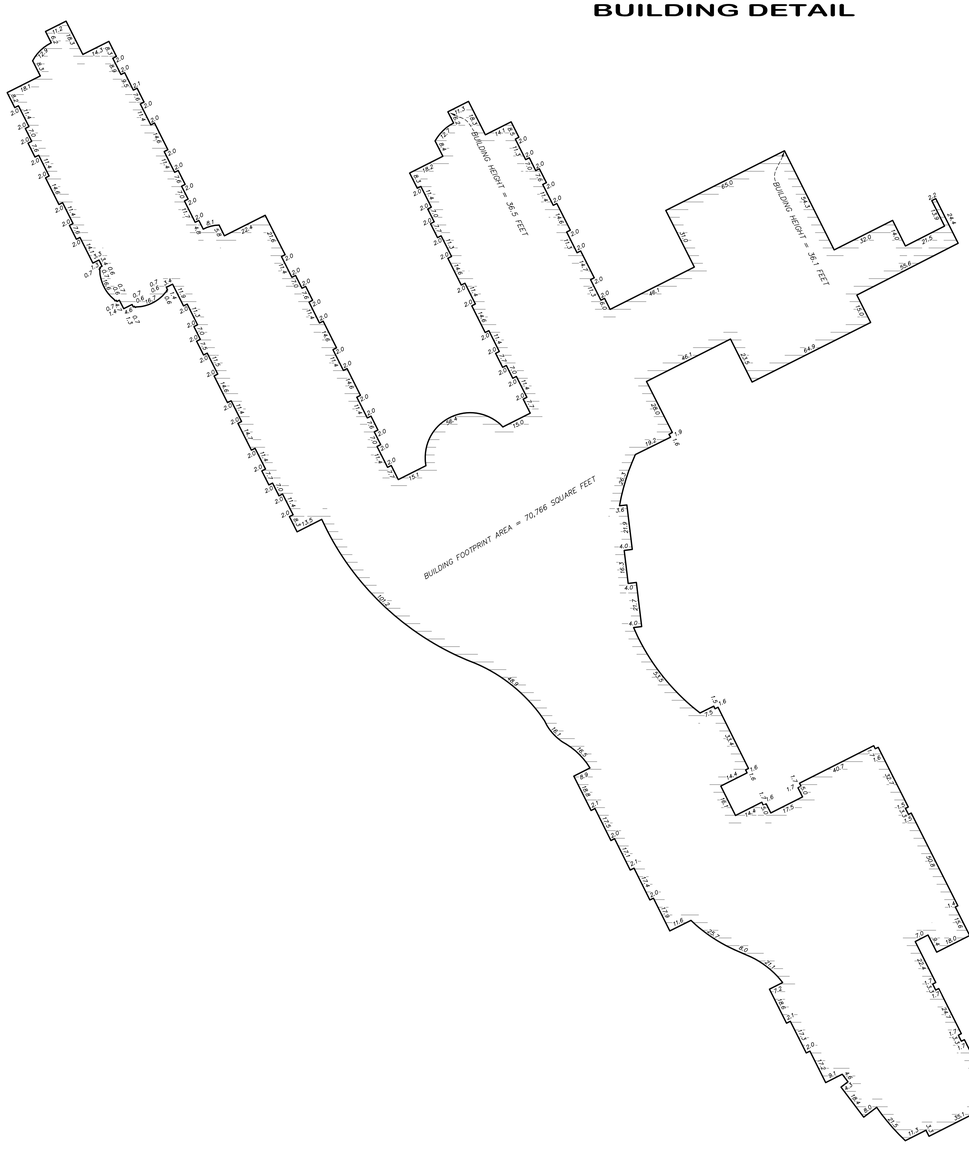

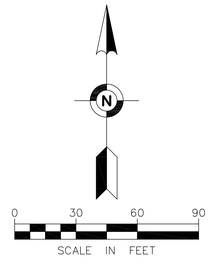

FIELD BOOK	PAGE

DRAWING NAME: 38788.dwg
JOB NO. 38788
FILE NO. 5970

FIELDWORK CHIEF: TC
DRAWN BY: PMD
CHECKED BY: EAR

REVISIONS

NO.	DATE	DESCRIPTION

ALTA/NSPS LAND TITLE SURVEY

SURVEY FOR:
Atkinson Holdings, LLC

PROPERTY ADDRESS:
1 Oak Ridge Drive
Chaska, Minnesota 55318

Egan, Field & Nowak, Inc.
land surveyors since 1872
1229 Tyler Street NE, Suite 100
Minneapolis, Minnesota 55413
PHONE: (612) 466-3300
FAX: (612) 466-3383
WWW.EFNSURVEY.COM

COPYRIGHT © 2019 By EGAN, FIELD & NOWAK, INC.

PLAT FILE NO.
R.T. DOC. NO.
C.R. DOC. NO.

OAK KNOLL SECOND ADDITION

KNOW ALL PERSONS BY THESE PRESENTS: That RCS – RCA OAK RIDGE, LLC, a Minnesota Limited Liability Company, fee owner of the following described property situated in the City of Waconia, County of Carver, State of Minnesota:

Real property in the City of Chaska, County of Carver, State of Minnesota, described as follows:

TORRENS PROPERTY

That part of Lot 1, Block 1, OAK KNOLL, lying within Tract A, REGISTERED LAND SURVEY NO. 76, according to the recorded plat thereof.

ABSTRACT PROPERTY

Lot 1, Block 1, OAK KNOLL, except that part lying within Tract A, REGISTERED LAND SURVEY NO. 76, according to the recorded plat thereof.

AND

Lot 2, Block 1, OAK KNOLL

AND

Outlot B, OAK KNOLL

Has caused the same to be surveyed and platted as OAK KNOLL SECOND ADDITION.

In witness whereof said RCS – RCA OAK RIDGE, LLC, a Minnesota Limited Liability Company, has caused these presents to be signed by its proper officer this _____ day of _____, 20___.

Signed: RCS – RCA OAK RIDGE, LLC, a Minnesota Limited Liability Company

By: _____, its _____

_____

_____

STATE OF _____
COUNTY OF _____

This instrument was acknowledged before me on this _____ day of _____ , 20___, by _____,

_____ of RCS – RCA OAK RIDGE, LLC, LLC, a Minnesota Limited Liability Company, on behalf of the company.

_____

_____

Notary Public _____ County, _____

My commission expires _____

I Eric Roeser do hereby certify that this plat was prepared by me or under my direct supervision; that I am a duly Licensed Land Surveyor in the State of Minnesota; that this plat is a correct representation of the boundary survey; that all mathematical data and labels are correctly designated on this plat; that all monuments depicted on this plat have been, or will be correctly set within one year; that all water boundaries and wet lands, as defined in Minnesota Statutes, Section 505.01, Subd. 3, as of the date of this certificate are shown and labeled on this plat; and all public ways are shown and labeled on this plat.

Dated this _____, day of _____, 20___.

_____
Eric Roeser, Licensed Land Surveyor
Minnesota License No. 47476

STATE OF MINNESOTA
COUNTY OF _____

This instrument was acknowledged before me on this _____ day of _____ , 20___, by Eric Roeser, Licensed Land Surveyor.

_____

_____

Notary Public _____ County, _____

My commission expires _____

CITY COUNCIL, CITY OF CHASKA, MINNESOTA

This plat was approved by the City Council of the City of Chaska, Minnesota, this _____ day of _____, 20___, and hereby certifies compliance with all requirements as set forth in Minnesota Statutes, Section 505.03, Subd. 2.

Signed: _____ Mayor

Signed: _____ Clerk

COUNTY SURVEYOR, CARVER COUNTY, MINNESOTA

Pursuant to Chapter 395, Minnesota Laws of 1971, this plat has been approved this _____ day of _____, 20___.

Brian E. Praske, County Surveyor

By: _____

COUNTY AUDITOR, CARVER COUNTY, MINNESOTA

I hereby certify that taxes payable in _____ and prior years have been paid for land described on this plat. Dated this _____ day of _____, 20____.

Crystal Campos, County Auditor

By: _____

COUNTY RECORDER, CARVER COUNTY, MINNESOTA

I hereby certify that this plat of OAK KNOLL SECOND ADDITION was filed this ____ day of _____, 20____, at _____ o'clock ___. M. as Document No._____.

Kaaren Lewis, County Recorder

By: _____

Egan, Field & Nowak, Inc.
land surveyors since 1872

SHEET 1 OF 3

OAK KNOLL SECOND ADDITION

PLAT FILE NO.
R.T. DOC. NO.
C.R. DOC. NO.

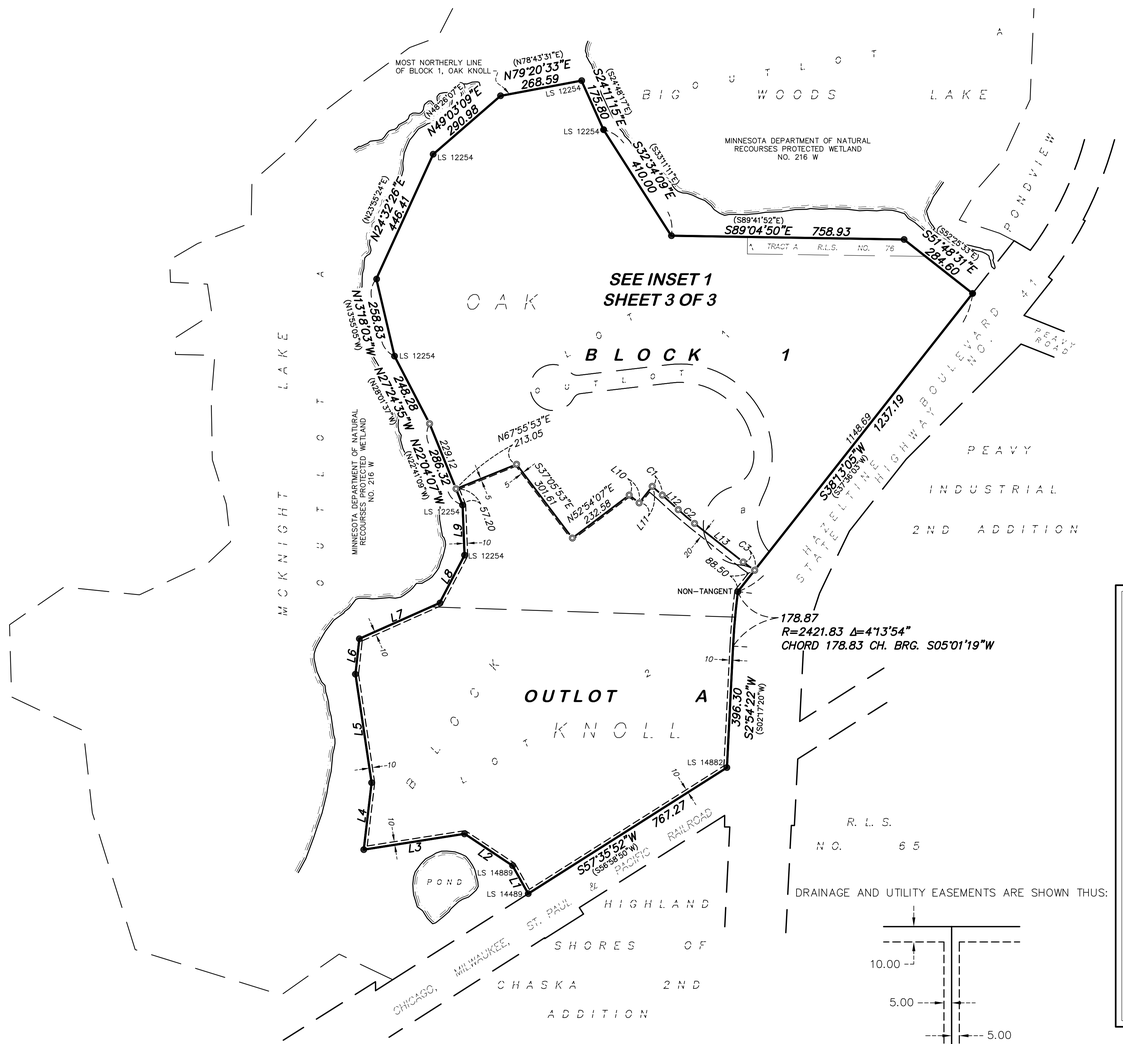

LINE TABLE				
Line #	DISTANCE	BEARING	PLAT BEARING	PLAT DISTANCE
L1	104.57	N29°06'43"W	(N29°43'45"W)	
L2	187.87	N56°27'32"W	(N57°04'34"W)	
L3	332.90	S81°07'06"W	(S80°30'04"W)	
L4	219.53	N06°41'29"E	(N06°04'27"E)	
L5	357.85	N08°26'30"W	(N09°03'32"W)	
L6	116.25	N06°16'57"E	(N05°39'55"E)	(115.94)
L7	286.41	N66°00'06"E	(N65°23'04"E)	(287.67)
L8	175.73	N27°35'54"E	(N26°58'52"E)	
L9	163.61	N02°16'22"W	(N02°53'24"W)	

LINE & CURVE TABLE					
Line #/Curve #	DISTANCE	BEARING / DELTA	RADIUS	CHORD LENGTH	CHORD BEARING
L10	41.08	S51°38'02"E			
L11	68.71	N38°22'21"E			
C1	43.73	2°32'38"	985.00	43.73	S48°58'50"E
L12	70.24	S47°42'30"E			
C2	69.55	3°55'33"	1015.00	69.54	S49°40'17"E
L13	202.32	S51°38'04"E			
C3	46.25	5°08'43"	515.00	46.23	S54°12'25"E

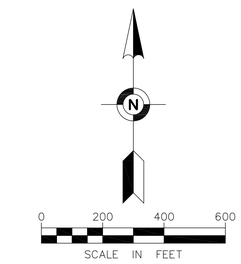

The most northerly line of Block 1, OAK KNOLL is assumed to bear North 79 degrees 20 minutes 33 seconds East.

- ● DENOTES FOUND OPEN 1/2 INCH IRON PIPE MONUMENT, LICENSE NUMBER, IF AVAILABLE IS NOTED
- ⊙ DENOTES SET 5/8 INCH BY 14 INCH LONG IRON REBAR MARKED BY LICENSE NO. 47476
- (N00°00'00"E) RECORD BEARING PER THE PLAT OF OAK KNOLL
- (XXX.XX) RECORD DISTANCE PER THE PLAT OF OAK KNOLL

DRAINAGE AND UTILITY EASEMENTS ARE SHOWN THUS:

BEING 5 FEET IN WIDTH, AND ADJOINING SIDE LOT LINES, BEING 10 FEET IN WIDTH AND ADJOINING BLOCK LINES, AND BEING 10 FEET IN WIDTH AND ADJOINING STREET LINES AS SHOWN ON THE PLAT, UNLESS OTHERWISE INDICATED.
NOT TO SCALE

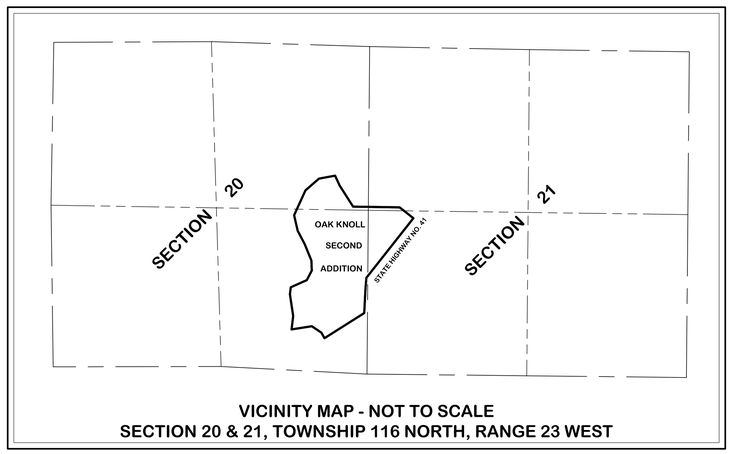

VICINITY MAP - NOT TO SCALE
SECTION 20 & 21, TOWNSHIP 116 NORTH, RANGE 23 WEST

Egan, Field & Nowak, Inc.
land surveyors since 1872

SHEET 2 OF 3

OAK KNOLL SECOND ADDITION

INSET 1

PLAT FILE NO.
R.T. DOC. NO.
C.R. DOC. NO.

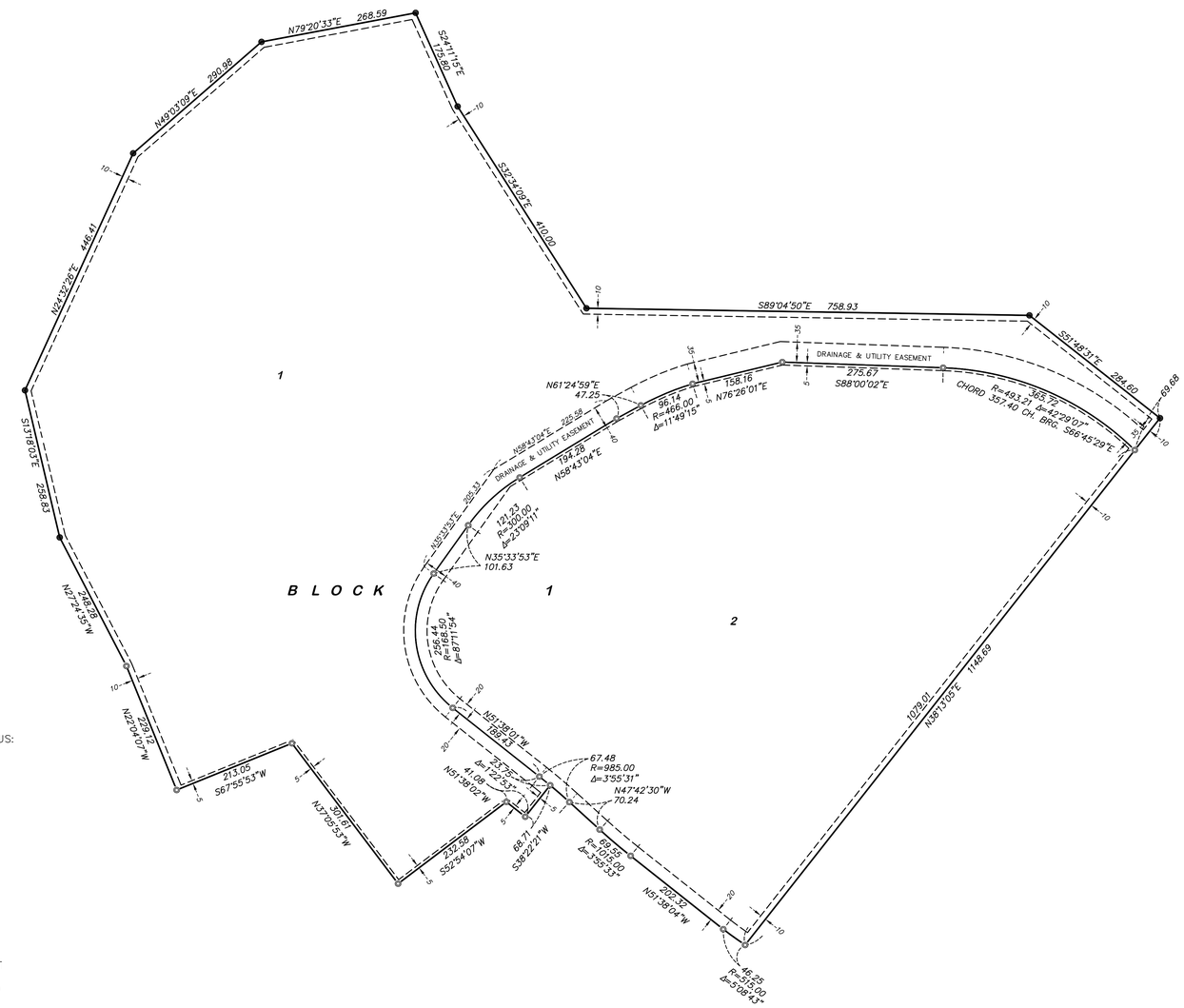

DRAINAGE AND UTILITY EASEMENTS ARE SHOWN THUS:

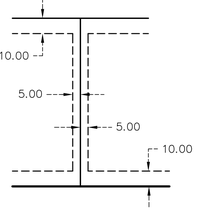

BEING 5 FEET IN WIDTH, AND ADJOINING SIDE LOT LINES, BEING 10 FEET IN WIDTH AND ADJOINING BLOCK LINES, AND BEING 10 FEET IN WIDTH AND ADJOINING STREET LINES AS SHOWN ON THE PLAT, UNLESS OTHERWISE INDICATED.
NOT TO SCALE

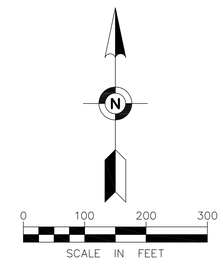

The most northerly line of Block 1, OAK KNOLL is assumed to bear North 79 degrees 20 minutes 33 seconds East.

- ● DENOTES FOUND OPEN 1/2 INCH IRON PIPE MONUMENT, LICENSE NUMBER, IF AVAILABLE IS NOTED
- ⊙ DENOTES SET 5/8 INCH BY 14 INCH LONG IRON REBAR MARKED BY LICENSE NO. 47476

Egan, Field & Nowak, Inc.
land surveyors since 1872

SHEET 3 OF 3

DEMOLITION LEGEND:

- SET IRON 18425
- FOUND IRON PIPE
- HYDRANT
- WATER VALVE
- TELEPHONE BOX
- SANITARY MANHOLE
- SIGN
- CATCH BASIN
- ELECTRIC METER
- LIGHT
- STORM CB MANHOLE
- STORM MANHOLE
- STORM CATCH BASIN
- EXISTING WATER MAIN MANHOLE
- POWER POLE
- ELECTRIC MANHOLE
- GAS METER
- PUSH BUTTON WALK
- TRAFFIC SIGNAL
- TELEPHONE MANHOLE
- HAND HOLE
- GUY WIRE
- FLARED END SECTION
- BOLLARD
- BW= BOTTOM OF RETAINING WALL
- TW= TOP OF RETAINING WALL
- WATER SERVICE
- x941.46 SPOT ELEVATION SPOTS ON CURB ARE TO TOP OF CURB UNLESS OTHERWISE NOTED

- 16" EXISTING EVERGREEN TREE TO REMAIN
- 18" EXISTING DECIDUOUS TREE TO REMAIN
- DEMOLITION LIMITS
- EXISTING SANITARY SEWER TO REMAIN
- EXISTING STORM SEWER TO REMAIN
- EXISTING GAS MAIN TO REMAIN
- EXISTING ELECTRICAL SERVICE TO REMAIN
- EXISTING TELEPHONE SERVICE TO REMAIN
- EXISTING WATERMAIN TO REMAIN
- EXISTING FENCING
- EXISTING EASEMENT
- EXISTING EASEMENT
- EXISTING WATERMAIN TO BE REMOVED
- EXISTING GAS SERVICE TO BE REMOVED
- EXISTING ELECTRICAL SERVICE TO BE REMOVED
- EXISTING TELEPHONE SERVICE TO BE REMOVED
- EXISTING CURB AND GUTTER TO BE REMOVED
- EXISTING CONCRETE TO REMAIN
- EXISTING CONCRETE PAVEMENT TO BE REMOVED
- EXISTING BITUMINOUS PAVEMENT TO BE REMOVED
- EXISTING GRAVEL TO BE REMOVED
- EXISTING LUMINARIES TO BE REMOVED
- EXISTING CATCH BASIN, SIGN OR OTHER STRUCTURAL ELEMENT TO BE REMOVED
- EXISTING CANOPY TREE TO BE REMOVED

NOTE: REFER TO TREE REMOVAL AND MITIGATION PLAN FOR ADDITIONAL INFORMATION, SEE SHEET L-1.0

DEMOLITION NOTES:

1. PRIOR TO STARTING CONSTRUCTION, THE CONTRACTOR SHALL BE RESPONSIBLE TO MAKE SURE THAT ALL REQUIRED PERMITS AND APPROVALS HAVE BEEN OBTAINED. NO CONSTRUCTION OR FABRICATION SHALL BEGIN UNTIL THE CONTRACTOR HAS RECEIVED AND THOROUGHLY REVIEWED ALL PLANS AND OTHER DOCUMENTS APPROVED BY ALL OF THE PERMITTING AUTHORITIES.
2. ALL DIMENSIONS, GRADES, EXISTING AND PROPOSED INFORMATION SHOWN ON THE PLANS SHALL BE FIELD VERIFIED BY THE CONTRACTOR PRIOR TO CONSTRUCTION. CONTRACTOR SHALL NOTIFY THE CONSTRUCTION MANAGER IF ANY DISCREPANCIES EXIST PRIOR TO PROCEEDING WITH CONSTRUCTION FOR NECESSARY PLAN OR GRADE CHANGES. NO EXTRA COMPENSATION SHALL BE PAID TO THE CONTRACTOR FOR WORK HAVING TO BE REDONE DUE TO INFORMATION SHOWN INCORRECTLY ON THESE PLANS IF SUCH NOTIFICATION HAS NOT BEEN GIVEN.
3. NOTIFY GOPHER STATE ONE CALL ATT 811 48 HOURS PRIOR TO START OF CONSTRUCTION.
4. DEMOLITION CONTRACTOR IS RESPONSIBLE FOR PROPER DISPOSAL OF ALL DEMOLISHED MATERIALS.
5. PRIOR TO STARTING CONSTRUCTION, ALL PERIMETER EROSION CONTROL DEVICES MUST BE INSTALLED IN ACCORDANCE WITH GRADING & EROSION CONTROL PLAN AND THE CITY OF WHITE BEAR LAKE.
6. REMOVAL CONTRACTOR SHALL BE RESPONSIBLE FOR PROPERLY LOCATING AND PROTECTING ALL UTILITY LINES PRIOR TO DIGGING AND DEMOLITION. OWNER AND ENGINEER SHALL NOT BE HELD RESPONSIBLE FOR PUBLIC OR PRIVATE UTILITY LOCATIONS.
7. REMOVAL CONTRACTOR SHALL BE RESPONSIBLE FOR THE DEMOLITION AND REMOVAL OF ALL EXISTING STRUCTURES AND OBJECTS THAT INTERFERE WITH THE PROPOSED CONSTRUCTION AS SHOWN IN THIS DRAWING PACKAGE. MATERIALS SALVAGED FOR REUSE ON-SITE SHALL NOT BE STORED ON ANY PUBLIC RIGHT OF WAY.
8. ALL WORK SHALL BE PERFORMED IN ACCORDANCE WITH THESE PLANS AND SPECIFICATIONS AND THE REQUIREMENTS AND STANDARDS OF THE CITY OF CHASKA.
9. ALL WORK WITHIN THE PUBLIC R.O.W. STALL COMPLY WITH MNDOT, CARVER COUNTY, AND THE CITY OF CHASKA ENGINEERING DESIGN STANDARDS.
10. CONTRACTOR SHALL FIELD VERIFY THE LOCATIONS AND ELEVATIONS OF EXISTING UTILITIES AND TOPOGRAPHIC FEATURES, SUCH AS EXISTING GUTTER GRADES AT THE PROPOSED DRIVEWAYS CONNECTIONS, PRIOR TO THE START OF SITE WORK. THE CONTRACTOR SHALL IMMEDIATELY NOTIFY THE ENGINEER OF ANY DISCREPANCIES OF VARIATIONS FROM THE PLANS.
11. CONTRACTOR SHALL PROVIDE TRAFFIC CONTROL IN ACCORDANCE WITH MN MUTCD AND/ OR MNDOT TEMPORARY TRAFFIC CONTROL ZONE LAYOUTS MANUAL DURING DEMOLITION OF EXISTING CURB & GUTTER, PAVEMENT, MEDIAN AND RETAINING WALLS.
12. CONTRACTOR SHALL BE HELD FULLY RESPONSIBLE TO PREVENT AND ELIMINATE ANY DUST NUISANCE OCCASIONED BY AND DURING CONSTRUCTION, UNTIL THE PROJECT HAS BEEN COMPLETED.
13. CONTRACTOR SHALL PROTECT ADJOINING PROPERTIES AND STRUCTURES FROM HAZARDS ASSOCIATED WITH HIS CONSTRUCTION ACTIVITIES AND SHALL BE RESPONSIBLE FOR ALL DAMAGES TO PROPERTIES AND STRUCTURES THAT OCCUR AS A RESULT OF THESE ACTIVITIES.
14. CONTRACTOR SHALL NOT IMPEDE EXISTING TRAFFIC CIRCULATION TO ADJACENT BUSINESSES.
15. ANY DAMAGES (AS DETERMINED BY CITY ENGINEER) TO EXISTING CURB & GUTTER, RETAINING WALL, LANDSCAPING OR OTHER INFRASTRUCTURE SHALL BE REPLACED TO THE SATISFACTION OF THE CITY ENGINEER.
16. CONTRACTOR IS RESPONSIBLE FOR THE REMOVAL AND DISPOSAL OF THE EXISTING BITUMINOUS. BITUMINOUS SHALL BE SAWCUT FOR STRAIGHT EDGES. TACK SHALL BE USED ON BITUMINOUS EDGE PRIOR TO PATCHING. MATCH EXISTING GRADES.
17. CONTRACTOR SHALL COORDINATE PRIVATE/PUBLIC UTILITIES RELOCATES, SUCH AS TRAFFIC SIGNAL HANDHOLES, AND WIRING, ETC. THE CITY SHALL BE KEPT APPRISED WITH ADVANCE NOTICE OF ANY ACTIVITIES.

MCKNIGHT LAKE
BIG WOODS LAKE
POND
CHICAGO, MILWAUKEE, ST.PAUL & PACIFIC RAILROAD
TH. 41
DEMOLITION LIMITS
EXISTING TREES TO REMAIN TYP.
EXISTING TREES TO BE REMOVED
REMOVE ANY ADDITIONAL EXISTING OBSTACLE COURSE FEATURES
EXISTING GARAGE TO BE REMOVED
EXISTING WETLAND TO REMAIN, SEE GRADING PLAN SHEETS C-4.0-C-4.3
EXISTING CLIMBING WALL AND CLIMBING STRUCTURES / OBSTACLES TO BE REMOVED
EXISTING ROPES COURSE AND GUIDE WIRES TO BE REMOVED
EXISTING GROUP OF TREES TO BE REMOVED (NUMBER OF SYMBOLS REDUCED FOR LEGIBILITY)
EXISTING WETLAND TO BE FILLED, SEE GRADING PLAN SHEETS C-4.0-C-4.3
EXISTING GROUP OF TREES TO BE REMOVED (NUMBER OF SYMBOLS REDUCED FOR LEGIBILITY)
EXISTING CULVERT TO BE REMOVED
EXISTING BITUMINOUS PATHWAY TO BE REMOVED
EXISTING STORM SEWER TO BE REMOVED
EXISTING HOTEL AND CONVENTION CENTER TO REMAIN
EXISTING CURB AND GUTTER SEGMENT TO REMAIN
EXISTING CONCRETE PAVEMENT TO BE REMOVED, ADJUST EXISTING WATER MAIN GATE VALVES
EXISTING TREES TO REMAIN
EXISTING SIDEWALK TO BE REMOVED
EXISTING HYDRANT TO BE REMOVED
EXISTING WATER MAIN TO BE REMOVED
REMOVE EXISTING SECTION OF FLAGSTONE WALKWAY TO FIRE PIT
EXISTING WATERMAIN SECTION TO REMAIN
EXISTING BITUMINOUS PATHWAY TO BE REMOVED
EXISTING GRAVEL PARKING AREA TO BE REMOVED
EXISTING WATERMAIN TO BE REMOVED
EXISTING GRAVEL PATHWAY TO BE REMOVED
EXISTING TREES TO BE REMOVED, TYP.
SAW CUT EXISTING BITUMINOUS PAVEMENT
REMOVE EXISTING BITUMINOUS PAVEMENT SECTIONS
REMOVE EXISTING CONCRETE CURB AND GUTTER TO NEAREST CONTROL JOINT
REMOVE EXISTING CONCRETE SIDEWALK
REMOVE EXISTING STORM SEWER TO THIS LOCATION FOR CONNECTION TO PROPOSED CB
EXISTING WATER MAIN TO BE REMOVED
EXISTING TELEPHONE SERVICE TO BE REMOVED
EXISTING POLE LIGHT TO BE REMOVED, TYP.
EXISTING WATER MAIN AND GATE VALVES TO BE REMOVED
EXISTING GAS SERVICE AND ELECTRICAL SERVICE ALONG ACCESS DRIVE TO BE REMOVED
EXISTING BITUMINOUS PAVEMENT DRIVE TO BE REMOVED
EXISTING CURBING TO BE REMOVED, TYP.
EXISTING TELEPHONE SERVICE TO BE REMOVED
EXISTING UTILITY BOXES TO BE REMOVED
EXISTING POLE LIGHT TO BE REMOVED
EXISTING BITUMINOUS ROAD AND CURB TO BE REMOVED
EXISTING POLE LIGHT TO BE REMOVED
EXISTING MONUMENT SIGN TO BE REMOVED
EXISTING CONCRETE APRON TO BE REMOVED
EXISTING UTILITY STRUCTURES TO BE REMOVED
EXISTING SIGN TO BE REMOVED
REMOVE AND PLUG WATERMAIN CONNECTION AT MAIN WITHIN T.H. 41 ROW
SAW CUT EXISTING BITUMINOUS PAVEMENT
EXISTING CONCRETE APRON AND CURB ISLAND TO BE REMOVED
EXISTING HYDRANT TO BE REMOVED
EXISTING POLE LIGHT AND UTILITY STRUCTURES TO BE REMOVED
EXISTING ACCESS DRIVE TO BE REMOVED (ACCESS TO BE MAINTAINED UNTIL PROPOSED LOOP ROAD IS OPERATIONAL COORDINATE WITH DEVELOPER AND THE CITY OF CHASKA)
EXISTING TREE TO BE REMOVED, TYP.
EXISTING CURBING TO BE REMOVED, TYP.
EXISTING SIGNS TO BE REMOVED, TYP.
EXISTING BASEBALL FIELD AND CHAINLINK BACKSTOP TO BE REMOVED
EXISTING VOLLEYBALL COURTS AND NET POLES TO BE REMOVED
SAW CUT EXISTING BITUMINOUS PAVEMENT
REMOVE EXISTING CATCH BASIN MANHOLE
REMOVE EXISTING 36" RCP TO THIS POINT (AFTER INTERIM CONDITION)
EXISTING MECHANICAL BUILDING TO REMAIN
EXISTING PAINT STRIPING TO BE REMOVED
EXISTING POLE LIGHT TO BE REMOVED
EXISTING CURB AND GUTTER SEGMENT TO REMAIN
EXISTING BITUMINOUS PARKING LOT TO BE REMOVED
EXISTING CONCRETE SIDEWALK AND STAIRCASE TO BE REMOVED
EXISTING TREES TO REMAIN, TYP.
COORDINATE TIMING OF WATERMAIN REMOVAL WITH CITY ENGINEER SO AS NOT TO DISRUPT SERVICE WITHIN T.H. 41 ROW
12" DIP
15" RCP
18" RCP
24" RCP
30" RCP
36" RCP
INVERT=1720.00
INVERT=1719.00
INVERT=1718.00
INVERT=1717.00
INVERT=1716.00
INVERT=1715.00
INVERT=1714.00
INVERT=1713.00
INVERT=1712.00
INVERT=1711.00
INVERT=1710.00
INVERT=1709.00
INVERT=1708.00
INVERT=1707.00
INVERT=1706.00
INVERT=1705.00
INVERT=1704.00
INVERT=1703.00
INVERT=1702.00
INVERT=1701.00
INVERT=1700.00
INVERT=1699.00
INVERT=1698.00
INVERT=1697.00
INVERT=1696.00
INVERT=1695.00
INVERT=1694.00
INVERT=1693.00
INVERT=1692.00
INVERT=1691.00
INVERT=1690.00
INVERT=1689.00
INVERT=1688.00
INVERT=1687.00
INVERT=1686.00
INVERT=1685.00
INVERT=1684.00
INVERT=1683.00
INVERT=1682.00
INVERT=1681.00

LEGEND:

- EXISTING CONTOUR
- PROPOSED CONTOUR
- PROPOSED SPOT ELEVATION
- TOP OF WALL ELEVATION / BOTTOM OF WALL ELEVATION
- DIRECTION OF DRAINAGE
- EXISTING CATCH BASINS
- EXISTING STORM SEWER
- PROPOSED CATCH BASINS
- PROPOSED STORM SEWER
- PROPOSED LIMITS OF CONSTRUCTION
- PROPERTY LINE
- INLET PROTECTION
- HEAVY DUTY SILT FENCE

WETLAND IMPACTS:

EXISTING WETLANDS:

WETLAND #1 = 2,412 SF
WETLAND #2 = 1,383 SF
WETLAND #3 = 12,504 SF

TOTAL = 16,299 SF ON SITE

WETLAND IMPACTS:

WETLAND #1 = 2,412 SF
WETLAND #2 = 1383 SF

TOTAL = 3,794 SF DISTURBED

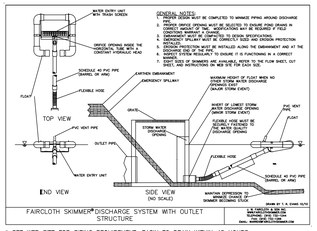

* SEE WEB SITE FOR SIZING REQUIREMENT, BASIN TO DRAIN WITHIN 48 HOURS.

GRADING NOTES

1. ALL PAVEMENTS SHALL SLOPE AWAY FROM PROPOSED BUILDINGS AT A MINIMUM GRADE OF 1.5%.
2. ACCESSIBLE PARKING SPACES AND ACCESS AISLE NOT TO EXCEED 2.0% IN ANY DIRECTION.
3. ALL CURB AND GUTTER AT ACCESSIBLE PARKING SPACES TO BE DEPRESSED WITH CURB TAPER, PER DETAIL.
4. THE CONTRACTOR SHALL KEEP THE ADJACENT ROADWAYS FREE OF DEBRIS AND PREVENT THE OFF-SITE TRACKING OF SOIL IN ACCORDANCE WITH THE REQUIREMENTS OF THE CITY/COUNTY.
5. NOTIFY GOPHER STATE ONE CALL, AT (800)252-1166 OR 811, 48 HOURS PRIOR TO START OF CONSTRUCTION.
6. ALL IMPROVEMENTS TO CONFORM WITH CITY AND COUNTY CONSTRUCTION STANDARDS SPECIFICATION, LATEST EDITION.
7. ROCK CONSTRUCTION ENTRANCES SHALL BE PROVIDED AT ALL CONSTRUCTION ACCESS POINTS.
8. CONTRACTOR TO KEEP A COPY OF THE FINAL DRAINAGE REPORT ON SITE AT ALL TIMES.
9. ADD 900 TO ELEVATIONS SHOWN AS 70.00 TO OBTAIN USGS ELEVATION.
10. CONTRACTOR TO SEED ALL ROUGH GRADED AREAS W/ APPROVED MNDOT TEMPORARY SEED MIX.
11. SURVEYOR TO VERIFY BENCHMARK ELEVATION PRIOR TO START OF CONSTRUCTION.
12. REFER TO GEOTECHNICAL REPORT AND PROJECT MANUAL, FOR SOIL CORRECTION REQUIREMENTS AND TESTING REQUIREMENTS.
13. STRIP TOPSOIL PRIOR TO ANY CONSTRUCTION. REUSE STOCKPILE ON SITE.
14. PRIOR TO STARTING CONSTRUCTION, THE CONTRACTOR SHALL BE RESPONSIBLE TO MAKE SURE THAT ALL REQUIRED PERMITS AND APPROVALS HAVE BEEN OBTAINED. NO CONSTRUCTION OR FABRICATION SHALL BEGIN UNTIL THE CONTRACTOR HAS RECEIVED AND THOROUGHLY REVIEWED ALL PLANS AND OTHER DOCUMENTS APPROVED BY ALL OF THE PERMITTING AUTHORITIES.
15. BUILDING PERMITS ARE REQUIRED FOR ALL RETAINING WALLS 4 FEET IN HEIGHT OR GREATER. THE WALLS SHALL BE DESIGNED BY A STRUCTURAL ENGINEER WITH DESIGN REVIEWED AND APPROVED BY THE CITY PRIOR TO INSTALLATION. ANY QUESTIONS REGARDING THE BUILDING PERMITS SHALL BE DIRECTED TO THE CITY BUILDING INSPECTOR.

ALLIANT
733 Marquette Avenue
Suite 700
Minneapolis, MN 55402
612.758.3080
www.alliant-inc.com

OAK RIDGE COMMONS
PLANNED UNIT DEVELOPMENT SUBMITTAL
HWY 41 & PEAVEY ROAD
CHASKA, MN

OVERALL INTERIM CONDITIONS

I hereby certify that this plan, specification, or report was prepared by me or under my direct supervision and that I am a duly Licensed PROFESSIONAL ENGINEER under the laws of the State of MINNESOTA

CLARK WICKLUND, PE

4-25-22 — Date
40922 — License No.

QUALITY ASSURANCE/CONTROL

BY	DATE

DATE	ISSUE
9-7-21	PUD RESUBMITTAL
9-30-21	PROGRESS
10-11-21	PUD RESUBMITTAL
10-22-21	CITY COMMENTS
10-26-21	CITY COMMENTS
11-17-21	CCWMO RESUBMITTAL
11-17-21	BID SET
1-10-22	SIGNAGE UPDATE
2-1-22	PUD RESUBMITTAL
3-15-22	LANDSCAPE PLAN UPDATE
3-28-22	CONSTRUCTION DOCUMENTS
4-25-22	CITY & COUNTY COMMENTS

PROJECT TEAM DATA
DESIGNED: MK
DRAWN: ST
PROJECT NO: 221-0004

C-2.0

Drawing name: K:\2021\210004\plan sheet\210004grad-interim.dwg Apr 25, 2022 - 3:07pm

GRADING NOTES

1. ALL PAVEMENTS SHALL SLOPE AWAY FROM PROPOSED BUILDINGS AT A MINIMUM GRADE OF 1.5%.
2. ACCESSIBLE PARKING SPACES AND ACCESS AISLE NOT TO EXCEED 2.0% IN ANY DIRECTION.
3. ALL CURB AND GUTTER AT ACCESSIBLE PARKING SPACES TO BE DEPRESSED WITH CURB TAPER, PER DETAIL.
4. THE CONTRACTOR SHALL KEEP THE ADJACENT ROADWAYS FREE OF DEBRIS AND PREVENT THE OFF-SITE TRACKING OF SOIL IN ACCORDANCE WITH THE REQUIREMENTS OF THE CITY/COUNTY.
5. NOTIFY GOPHER STATE ONE CALL, AT (800)252-1166 OR 811, 48 HOURS PRIOR TO START OF CONSTRUCTION.
6. ALL IMPROVEMENTS TO CONFORM WITH CITY AND COUNTY CONSTRUCTION STANDARDS SPECIFICATION, LATEST EDITION.
7. ROCK CONSTRUCTION ENTRANCES SHALL BE PROVIDED AT ALL CONSTRUCTION ACCESS POINTS.
8. CONTRACTOR TO KEEP A COPY OF THE FINAL DRAINAGE REPORT ON SITE AT ALL TIMES.
9. ADD 900 TO ELEVATIONS SHOWN AS 70.00 TO OBTAIN USGS ELEVATION.
10. CONTRACTOR TO SEED ALL ROUGH GRADED AREAS W/ APPROVED MNDOT TEMPORARY SEED MIX.
11. SURVEYOR TO VERIFY BENCHMARK ELEVATION PRIOR TO START OF CONSTRUCTION.
12. REFER TO GEOTECHNICAL REPORT AND PROJECT MANUAL, FOR SOIL CORRECTION REQUIREMENTS AND TESTING REQUIREMENTS.
13. STRIP TOPSOIL PRIOR TO ANY CONSTRUCTION. REUSE STOCKPILE ON SITE.
14. PRIOR TO STARTING CONSTRUCTION, THE CONTRACTOR SHALL BE RESPONSIBLE TO MAKE SURE THAT ALL REQUIRED PERMITS AND APPROVALS HAVE BEEN OBTAINED. NO CONSTRUCTION OR FABRICATION SHALL BEGIN UNTIL THE CONTRACTOR HAS RECEIVED AND THOROUGHLY REVIEWED ALL PLANS AND OTHER DOCUMENTS APPROVED BY ALL OF THE PERMITTING AUTHORITIES.
15. BUILDING PERMITS ARE REQUIRED FOR ALL RETAINING WALLS 4 FEET IN HEIGHT OR GREATER. THE WALLS SHALL BE DESIGNED BY A STRUCTURAL ENGINEER WITH DESIGN REVIEWED AND APPROVED BY THE CITY PRIOR TO INSTALLATION. ANY QUESTIONS REGARDING THE BUILDING PERMITS SHALL BE DIRECTED TO THE CITY BUILDING INSPECTOR.

LEGEND:

- EXISTING CONTOUR (964)
- PROPOSED CONTOUR (964)
- PROPOSED SPOT ELEVATION (833.50 / 833.00)
- TOP OF WALL ELEVATION / BOTTOM OF WALL ELEVATION (TW 833.50 / BW 833.00)
- DIRECTION OF DRAINAGE (2.00%)
- EXISTING CATCH BASINS
- EXISTING STORM SEWER
- PROPOSED CATCH BASINS
- PROPOSED STORM SEWER
- PROPOSED LIMITS OF CONSTRUCTION
- PROPERTY LINE
- INLET PROTECTION
- FILTER LOG

0 20' 40' 80'
SCALE IN FEET

FAIRCLOTH SKIMMER CONNECT TO TEMP. 8" PIPE OUTLET INV(OUT)=956.00

TEMP. SEDIMENT BASIN
ELEV=956-960
STORAGE PROVIDED=23,461 CF
STORAGE REQUIRED=16,591 CF
(4.61 AC. DRAINS TO BASIN)

TEMP. SEDIMENT BASIN
ELEV=958-960
STORAGE PROVIDED=39,807 CF
STORAGE REQUIRED=33,258 CF
(9.24 AC. DRAINS TO BASIN)

FAIRCLOTH SKIMMER CONNECT TO TEMP. PIPE OUTLET INV(OUT)=958.00

TEMP. SEDIMENT BASIN
ELEV=938-940
STORAGE PROVIDED=9,824 CF
STORAGE REQUIRED=8,636 CF
(2.40 AC. DRAINS TO BASIN)

FAIRCLOTH SKIMMER CONNECT TO TEMP. PIPE OUTLET INV(OUT)=938.00

COSTCO WHOLESALE
164,545 S.F.
FFE=966.00

BIG WOODS LN

ALLIANT
733 Marquette Avenue
Suite 700
Minneapolis, MN 55402
612.758.3080
www.alliant-inc.com

OAK RIDGE COMMONS
PLANNED UNIT DEVELOPMENT SUBMITTAL
HWY 41 & PEAVEY ROAD
CHASKA, MN

INTERIM CONDITIONS PLAN - VIEW 1

I hereby certify that this plan, specification, or report was prepared by me or under my direct supervision and that I am a duly Licensed PROFESSIONAL ENGINEER under the laws of the State of MINNESOTA

CLARK WICKLUND, PE

4-25-22 — Date
40922 — License No.

QUALITY ASSURANCE/CONTROL

BY	DATE

DATE	ISSUE
9-7-21	PUD RESUBMITTAL
9-30-21	PROGRESS
10-11-21	PUD RESUBMITTAL
10-22-21	CITY COMMENTS
10-26-21	CITY COMMENTS
11-17-21	CCWMO RESUBMITTAL
11-17-21	BID SET
1-10-22	SIGNAGE UPDATE
2-1-22	PUD RESUBMITTAL
3-15-22	LANDSCAPE PLAN UPDATE
3-28-22	CONSTRUCTION DOCUMENTS
4-25-22	CITY & COUNTY COMMENTS

PROJECT TEAM DATA

DESIGNED:	MK
DRAWN:	ST
PROJECT NO:	221-0004

C-2.1

drawing name: X:\2021\210004\plan sheets\210004grad-interim.dwg Apr 25, 2022 - 3:08pm

GRADING NOTES

1. ALL PAVEMENTS SHALL SLOPE AWAY FROM PROPOSED BUILDINGS AT A MINIMUM GRADE OF 1.5%.
2. ACCESSIBLE PARKING SPACES AND ACCESS AISLE NOT TO EXCEED 2.0% IN ANY DIRECTION.
3. ALL CURB AND GUTTER AT ACCESSIBLE PARKING SPACES TO BE DEPRESSED WITH CURB TAPER, PER DETAIL.
4. THE CONTRACTOR SHALL KEEP THE ADJACENT ROADWAYS FREE OF DEBRIS AND PREVENT THE OFF-SITE TRACKING OF SOIL IN ACCORDANCE WITH THE REQUIREMENTS OF THE CITY/COUNTY.
5. NOTIFY GOPHER STATE ONE CALL, AT (800)252-1166 OR 811, 48 HOURS PRIOR TO START OF CONSTRUCTION.
6. ALL IMPROVEMENTS TO CONFORM WITH CITY AND COUNTY CONSTRUCTION STANDARDS SPECIFICATION, LATEST EDITION.
7. ROCK CONSTRUCTION ENTRANCES SHALL BE PROVIDED AT ALL CONSTRUCTION ACCESS POINTS.
8. CONTRACTOR TO KEEP A COPY OF THE FINAL DRAINAGE REPORT ON SITE AT ALL TIMES.
9. ADD 900 TO ELEVATIONS SHOWN AS 70.00 TO OBTAIN USGS ELEVATION.
10. CONTRACTOR TO SEED ALL ROUGH GRADED AREAS W/ APPROVED MNDOT TEMPORARY SEED MIX.
11. SURVEYOR TO VERIFY BENCHMARK ELEVATION PRIOR TO START OF CONSTRUCTION.
12. REFER TO GEOTECHNICAL REPORT AND PROJECT MANUAL, FOR SOIL CORRECTION REQUIREMENTS AND TESTING REQUIREMENTS.
13. STRIP TOPSOIL PRIOR TO ANY CONSTRUCTION. REUSE STOCKPILE ON SITE.
14. PRIOR TO STARTING CONSTRUCTION, THE CONTRACTOR SHALL BE RESPONSIBLE TO MAKE SURE THAT ALL REQUIRED PERMITS AND APPROVALS HAVE BEEN OBTAINED. NO CONSTRUCTION OR FABRICATION SHALL BEGIN UNTIL THE CONTRACTOR HAS RECEIVED AND THOROUGHLY REVIEWED ALL PLANS AND OTHER DOCUMENTS APPROVED BY ALL OF THE PERMITTING AUTHORITIES.
15. BUILDING PERMITS ARE REQUIRED FOR ALL RETAINING WALLS 4 FEET IN HEIGHT OR GREATER. THE WALLS SHALL BE DESIGNED BY A STRUCTURAL ENGINEER WITH DESIGN REVIEWED AND APPROVED BY THE CITY PRIOR TO INSTALLATION. ANY QUESTIONS REGARDING THE BUILDING PERMITS SHALL BE DIRECTED TO THE CITY BUILDING INSPECTOR.

LEGEND:

- EXISTING CONTOUR
- PROPOSED CONTOUR
- PROPOSED SPOT ELEVATION
- TOP OF WALL ELEVATION / BOTTOM OF WALL ELEVATION
- DIRECTION OF DRAINAGE
- EXISTING CATCH BASINS
- EXISTING STORM SEWER
- PROPOSED CATCH BASINS
- PROPOSED STORM SEWER
- PROPOSED LIMITS OF CONSTRUCTION
- PROPERTY LINE
- INLET PROTECTION
- FILTER LOG

SCALE 0 20' 40' 80' IN FEET

(IESF 1) TEMP. SEDIMENT BASIN
ELEV=940-944
STORAGE PROVIDED=238,489 CF
(8.42 AC. DRAINS TO BASIN)

FAIRCLOTH SKIMMER CONNECT TO TEMP. 8" PIPE OUTLET INV(OUT)=940.00

TEMP. PIPE TO CONNECT TO EXISTING CATCH BASIN [TO BE REMOVED AFTER INTERIM CONDITION]
EXISTING RIM ELEV=948.80
NW TEMPORARY PIPE (8") CORE DRILL INV=935.00
EXIST. 36" INV OUT=932.10

TEMP. PIPE TO CONNECT TO EXISTING CATCH BASIN [TO BE REMOVED AFTER INTERIM CONDITION]
EXISTING RIM ELEV=947.90
SE TEMPORARY PIPE (8") CORE DRILL INV=944.00
EXIST. 36" INV OUT=935.60

FAIRCLOTH SKIMMER CONNECT TO TEMP. 8" PIPE OUTLET INV(OUT)=956.00

TEMP. SEDIMENT BASIN
ELEV=956-960
STORAGE PROVIDED=23,461 CF
STORAGE REQUIRED=16,591 CF
(4.61 AC. DRAINS TO BASIN)

963 BERM ELEV

977.29 T.W.
966.00 B.W.
(11.29' HT.)

961.50 T.W.
961.50 B.W.

962.00 T.W.
958.00 B.W.
(4' HT.)

952.87 T.W.
944.00 B.W.
(8.87' HT.)

959.33 T.W.
953.50 B.W.
(5.83' HT.)

MATCH LINE VIEW 1
MATCH LINE VIEW 2

BIG WO

ALLIANT
733 Marquette Avenue
Suite 700
Minneapolis, MN 55402
612.758.3080
www.alliant-inc.com

OAK RIDGE COMMONS
PLANNED UNIT DEVELOPMENT SUBMITTAL
HWY 41 & PEAVEY ROAD
CHASKA, MN

INTERIM CONDITIONS PLAN - VIEW 2

I hereby certify that this plan, specification, or report was prepared by me or under my direct supervision and that I am a duly Licensed PROFESSIONAL ENGINEER under the laws of the State of MINNESOTA

CLARK WICKLUND, PE

4-25-22 Date — 40922 License No.

QUALITY ASSURANCE/CONTROL

BY	DATE
DATE	**ISSUE**
9-7-21	PUD RESUBMITTAL
9-30-21	PROGRESS
10-11-21	PUD RESUBMITTAL
10-22-21	CITY COMMENTS
10-26-21	CITY COMMENTS
11-17-21	CCWMO RESUBMITTAL
11-17-21	BID SET
1-10-22	SIGNAGE UPDATE
2-1-22	PUD RESUBMITTAL
3-15-22	LANDSCAPE PLAN UPDATE
3-28-22	CONSTRUCTION DOCUMENTS
4-25-22	CITY & COUNTY COMMENTS

PROJECT TEAM DATA

DESIGNED: MK
DRAWN: ST
PROJECT NO: 221-0004

C-2.2

Drawing name: X:\2021\210004\plan sheets\210004grad-interim.dwg Apr 25, 2022 - 3:10pm



ALLIANT
733 Marquette Avenue
Suite 700
Minneapolis, MN 55402
612.758.3080
www.alliant-inc.com

OAK RIDGE COMMONS
PLANNED UNIT DEVELOPMENT SUBMITTAL
HWY 41 & PEAVEY ROAD
CHASKA, MN

INTERIM CONDITIONS PLAN - VIEW 3

I hereby certify that this plan, specification, or report was prepared by me or under my direct supervision and that I am a duly Licensed PROFESSIONAL ENGINEER under the laws of the State of MINNESOTA

CLARK WICKLUND, PE

4-25-22 — Date
40922 — License No.

QUALITY ASSURANCE/CONTROL

BY	DATE

DATE	ISSUE
9-7-21	PUD RESUBMITTAL
9-30-21	PROGRESS
10-11-21	PUD RESUBMITTAL
10-22-21	CITY COMMENTS
10-26-21	CITY COMMENTS
11-17-21	CCWMO RESUBMITTAL
11-17-21	BID SET
1-10-22	SIGNAGE UPDATE
2-1-22	PUD RESUBMITTAL
3-15-22	LANDSCAPE PLAN UPDATE
3-28-22	CONSTRUCTION DOCUMENTS
4-25-22	CITY & COUNTY COMMENTS

PROJECT TEAM DATA
DESIGNED: MK
DRAWN: ST
PROJECT NO: 221-0004

C-2.3

Drawing name: X:\2021\210004\plan sheets\210004grad-interim.dwg Apr 25, 2022 - 3:12pm

SITE DATA:

SITE SUMMARY	
OAKRIDGE COMMONS	
PROPERTY AREA	±66.83 AC
ZONING	
EXISTING ZONING	PLANNED MULTI-USE DEVELOPMENT
PROPOSED ZONING	PLANNED MULTI-USE DEVELOPMENT
PARKING SETBACKS	
ROAD SIDE	10'
INTERIOR SIDE YARD	5'
TREED STEEP SLOPE SETBACK	50'
FROM CENTERLINE OF HWY 41	90'
BUILDING SETBACKS	
CITY OUTLOT	40'
RAILROAD	50'
TREED STEEP SLOPE BUILDING SETBACK	50'
FROM CENTERLINE OF HWY 41	150'
BUFFERS	
TREED STEEP SLOPE BUFFER	30'
DELINEATED WETLANDS	30'

LOT SUMMARY AREAS	
PROPOSED PROPERTY	**±66.83 AC**
LOT 1 - EXISTING HOTEL & CONFERENCE CENTER	
LOT 1 PROPERTY AREA	±22.10 AC
PROPOSED IMPERVIOUS AREA	±7.38 AC (35.7%)
PROPOSED PERVIOUS AREA	±14.22 AC (64.3%)
EXISTING BUILDING FOOTPRINT (HOTEL & CONFERENCE)	± 75,815 S.F.
EXISTING BUILDING FLOOR AREA (HOTEL & CONFERENCE)	± 171,000 S.F.
REQUIRED PARKING	294 STALLS
PROPOSED PARKING	286 STALLS
AUXILIARY PARKING LOT PARKING STALLS	20 STALLS
TOTAL PARKING PROVIDED	306 STALLS
A.D.A. PARKING STALLS REQUIRED / PROPOSED STALLS PROVIDED	8 A.D.A. STALLS / 8 A.D.A. STALLS
LOT 2 - PROPOSED COSTCO DEVELOPMENT	
LOT 2 PROPERTY AREA	±16.95 AC
PROPOSED IMPERVIOUS AREA	±13.82 AC (81.5%)
PROPOSED PERVIOUS AREA	±3.13 AC (18.5%)
BUILDING AREA - RETAIL (COSTCO)	±164,545 S.F.
REQUIRED PARKING	470 STALLS
PARKING STALLS PROVIDED	727 STALLS
AUXILIARY PARKING LOT PARKING STALLS (FROM LOT ONE)	52 STALLS
TOTAL PROPOSED PARKING	779 STALLS
A.D.A PARKING REQUIRED / PROPOSED STALLS PROVIDED	17 A.D.A. STALLS / 17 A.D.A. STALLS
LOT 3 - MULTIFAMILY	
LOT 3 PROPERTY AREA	±27.76 AC
PROPOSED IMPERVIOUS AREA	11.33 AC (40%)
PROPOSED PERVIOUS AREA	16.43 AC (60%)
STEEP SLOPE AREA	± 3.28 AC
PROPOSED DWELLING UNITS	280 UNITS
REQUIRED PARKING	560 STALLS
PROPOSED PARKING	576 STALLS (2.06 PER UNIT)
AREA TO BE DEDICATED AS R.O.W.	
AREA TO BE DEDICATED AS R.O.W.	895 S.F. - 0.02 AC
SLIVER AREA (CITY OWNED PROPERTY)	
TOTAL SLIVER AREA	4,178 S.F. - 0.09 AC
SLIVER AREA TO BE DEDICATED AS R.O.W.	1,104 S.F.

PARKING DATA:

PARKING REQUIREMENTS SUMMARY
HOTEL
1 STALL / ROOM
CONFERENCE CENTER
15 STALLS PLUS 1 STALL / 300 S.F. OVER 2,000 S.F.
RETAIL
1 STALL / 350 S.F. GENERAL FLOOR AREA
MULTIFAMILY
2 STALLS / 1 DWELLING UNIT

PARKING LOT LANDSCAPE CALCULATIONS	
INTERNAL PARKING LANDSCAPING REQUIRED IS 10% OF THE TOTAL PARKING AREA	
LOT 1 NORTH PARKING LOT	**%**
IMPERVIOUS PARKING AREA	131,696 S.F.
LANDSCAPE ISLAND AREA	47,455 S.F. (36.03%)
LOT 2 - COSTCO PARKING LOT	**%**
IMPERVIOUS PARKING AREA	437,800 S.F.
LANDSCAPE ISLAND AREA	44,493 S.F. (10.16%)
LOT 3 - MULTIFAMILY	**%**
IMPERVIOUS PARKING AREA	210,762 S.F.
LANDSCAPE ISLAND AREA	25,042 S.F. (11.88%)

LEGEND:

- PROPOSED CURB & GUTTER
- PROPOSED OUTFALL CURB & GUTTER (PROVIDE 5' CURB TRANSITION)
- MOUNTABLE CURB (PROVIDE 5' CURB TRANSITION)
- CURB & GUTTER (BY OTHERS)
- CONCRETE PAVEMENT
- HEAVY DUTY BITUMINOUS PAVEMENT
- LIGHT DUTY BITUMINOUS PAVEMENT
- EXISTING DECIDUOUS TREE TO REMAIN
- EXISTING EVERGREEN TREE TO REMAIN

NOTE:
SEE INDIVIDUAL TREE SYMBOLS FOR CALIPER SIZE

- CONSTRUCTION LIMITS
- LOT LINE
- PROPERTY LINE
- PROP. MOD. BLOCK RET. WALL
- DRAINAGE & UTILITY EASEMENT
- BUILDING SETBACK
- EXISTING WETLAND (WL)
- WETLAND SETBACK
- 30' TREED STEEP SLOPE BUFFER
- 50' TREED STEEP SLOPE BUILDING SETBACK

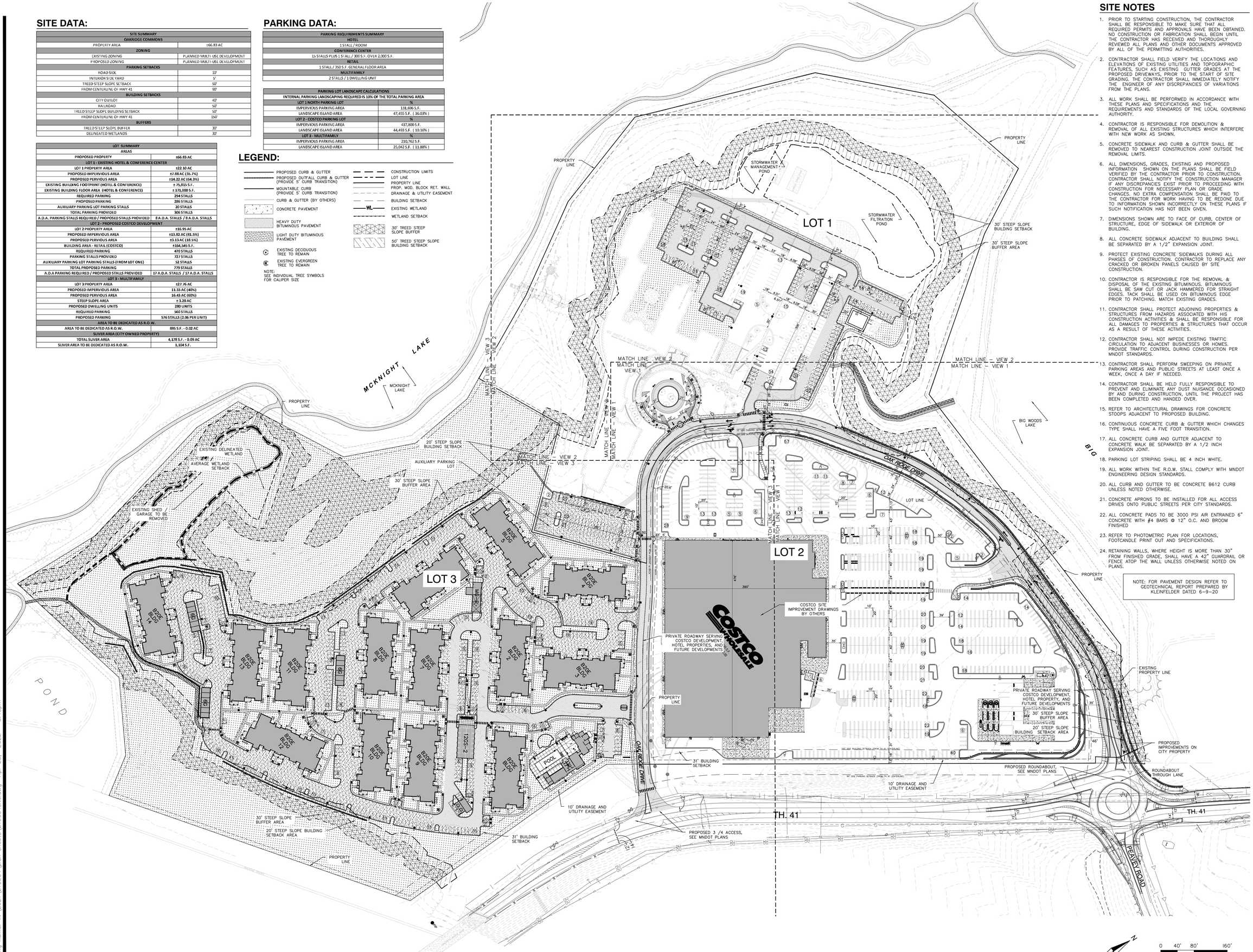

0 40' 80' 160'
SCALE IN FEET

SITE NOTES

1. PRIOR TO STARTING CONSTRUCTION, THE CONTRACTOR SHALL BE RESPONSIBLE TO MAKE SURE THAT ALL REQUIRED PERMITS AND APPROVALS HAVE BEEN OBTAINED. NO CONSTRUCTION OR FABRICATION SHALL BEGIN UNTIL THE CONTRACTOR HAS RECEIVED AND THOROUGHLY REVIEWED ALL PLANS AND OTHER DOCUMENTS APPROVED BY ALL OF THE PERMITTING AUTHORITIES.
2. CONTRACTOR SHALL FIELD VERIFY THE LOCATIONS AND ELEVATIONS OF EXISTING UTILITIES AND TOPOGRAPHIC FEATURES, SUCH AS EXISTING GUTTER GRADES AT THE PROPOSED DRIVEWAYS, PRIOR TO THE START OF SITE GRADING. THE CONTRACTOR SHALL IMMEDIATELY NOTIFY THE ENGINEER OF ANY DISCREPANCIES OF VARIATIONS FROM THE PLANS.
3. ALL WORK SHALL BE PERFORMED IN ACCORDANCE WITH THESE PLANS AND SPECIFICATIONS AND THE REQUIREMENTS AND STANDARDS OF THE LOCAL GOVERNING AUTHORITY.
4. CONTRACTOR IS RESPONSIBLE FOR DEMOLITION & REMOVAL OF ALL EXISTING STRUCTURES WHICH INTERFERE WITH NEW WORK AS SHOWN.
5. CONCRETE SIDEWALK AND CURB & GUTTER SHALL BE REMOVED TO NEAREST CONSTRUCTION JOINT OUTSIDE THE REMOVAL LIMITS.
6. ALL DIMENSIONS, GRADES, EXISTING AND PROPOSED INFORMATION SHOWN ON THE PLANS SHALL BE FIELD VERIFIED BY THE CONTRACTOR PRIOR TO CONSTRUCTION. CONTRACTOR SHALL NOTIFY THE CONSTRUCTION MANAGER IF ANY DISCREPANCIES EXIST PRIOR TO PROCEEDING WITH CONSTRUCTION FOR NECESSARY PLAN OR GRADE CHANGES. NO EXTRA COMPENSATION SHALL BE PAID TO THE CONTRACTOR FOR WORK HAVING TO BE REDONE DUE TO INFORMATION SHOWN INCORRECTLY ON THESE PLANS IF SUCH NOTIFICATION HAS NOT BEEN GIVEN.
7. DIMENSIONS SHOWN ARE TO FACE OF CURB, CENTER OF STRUCTURE, EDGE OF SIDEWALK OR EXTERIOR OF BUILDING.
8. ALL CONCRETE SIDEWALK ADJACENT TO BUILDING SHALL BE SEPARATED BY A 1/2" EXPANSION JOINT.
9. PROTECT EXISTING CONCRETE SIDEWALKS DURING ALL PHASES OF CONSTRUCTION. CONTRACTOR TO REPLACE ANY CRACKED OR BROKEN PANELS CAUSED BY SITE CONSTRUCTION.
10. CONTRACTOR IS RESPONSIBLE FOR THE REMOVAL & DISPOSAL OF THE EXISTING BITUMINOUS. BITUMINOUS SHALL BE SAW CUT OR JACK HAMMERED FOR STRAIGHT EDGES. TACK SHALL BE USED ON BITUMINOUS EDGE PRIOR TO PATCHING. MATCH EXISTING GRADES.
11. CONTRACTOR SHALL PROTECT ADJOINING PROPERTIES & STRUCTURES FROM HAZARDS ASSOCIATED WITH HIS CONSTRUCTION ACTIVITIES & SHALL BE RESPONSIBLE FOR ALL DAMAGES TO PROPERTIES & STRUCTURES THAT OCCUR AS A RESULT OF THESE ACTIVITIES.
12. CONTRACTOR SHALL NOT IMPEDE EXISTING TRAFFIC CIRCULATION TO ADJACENT BUSINESSES OR HOMES. PROVIDE TRAFFIC CONTROL DURING CONSTRUCTION PER MNDOT STANDARDS.
13. CONTRACTOR SHALL PERFORM SWEEPING ON PRIVATE PARKING AREAS AND PUBLIC STREETS AT LEAST ONCE A WEEK, ONCE A DAY IF NEEDED.
14. CONTRACTOR SHALL BE HELD FULLY RESPONSIBLE TO PREVENT AND ELIMINATE ANY DUST NUISANCE OCCASIONED BY AND DURING CONSTRUCTION, UNTIL THE PROJECT HAS BEEN COMPLETED AND HANDED OVER.
15. REFER TO ARCHITECTURAL DRAWINGS FOR CONCRETE STOOPS ADJACENT TO PROPOSED BUILDING.
16. CONTINUOUS CONCRETE CURB & GUTTER WHICH CHANGES TYPE SHALL HAVE A FIVE FOOT TRANSITION.
17. ALL CONCRETE CURB AND GUTTER ADJACENT TO CONCRETE WALK BE SEPARATED BY A 1/2 INCH EXPANSION JOINT.
18. PARKING LOT STRIPING SHALL BE 4 INCH WHITE.
19. ALL WORK WITHIN THE R.O.W. STALL COMPLY WITH MNDOT ENGINEERING DESIGN STANDARDS.
20. ALL CURB AND GUTTER TO BE CONCRETE B612 CURB UNLESS NOTED OTHERWISE.
21. CONCRETE APRONS TO BE INSTALLED FOR ALL ACCESS DRIVES ONTO PUBLIC STREETS PER CITY STANDARDS.
22. ALL CONCRETE PADS TO BE 3000 PSI AIR ENTRAINED 6" CONCRETE WITH #4 BARS @ 12" O.C. AND BROOM FINISHED
23. REFER TO PHOTOMETRIC PLAN FOR LOCATIONS, FOOTCANDLE PRINT OUT AND SPECIFICATIONS.
24. RETAINING WALLS, WHERE HEIGHT IS MORE THAN 30" FROM FINISHED GRADE, SHALL HAVE A 42" GUARDRAIL OR FENCE ATOP THE WALL UNLESS OTHERWISE NOTED ON PLANS.

ALLIANT
733 Marquette Avenue
Suite 700
Minneapolis, MN 55402
612.758.3080
www.alliant-inc.com

OAK RIDGE COMMONS
PLANNED UNIT DEVELOPMENT SUBMITTAL
HWY 41 & PEAVEY ROAD
CHASKA, MN

OVERALL SITE PLAN

I hereby certify that this plan, specification, or report was prepared by me or under my direct supervision and that I am a duly Licensed PROFESSIONAL ENGINEER under the laws of the State of MINNESOTA

CLARK WICKLUND, PE
4-25-22 Date
40922 License No.

QUALITY ASSURANCE/CONTROL
BY DATE

DATE	ISSUE
9-7-21	PUD RESUBMITTAL
9-30-21	PROGRESS
10-11-21	PUD RESUBMITTAL
10-22-21	CITY COMMENTS
10-26-21	CITY COMMENTS
11-17-21	CCWMO RESUBMITTAL
11-17-21	BID SET
1-10-22	SIGNAGE UPDATE
2-1-22	PUD RESUBMITTAL
5-15-22	LANDSCAPE PLAN UPDATE
3-28-22	CONSTRUCTION DOCUMENTS
4-25-22	CITY & COUNTY COMMENTS

PROJECT TEAM DATA
DESIGNED: MK
DRAWN: MLS
PROJECT NO: 221-0004

C-3.0

Drawing name: X:\2021\210004\plan sheets\210004site.dwg Apr 25, 2022 - 3:18pm

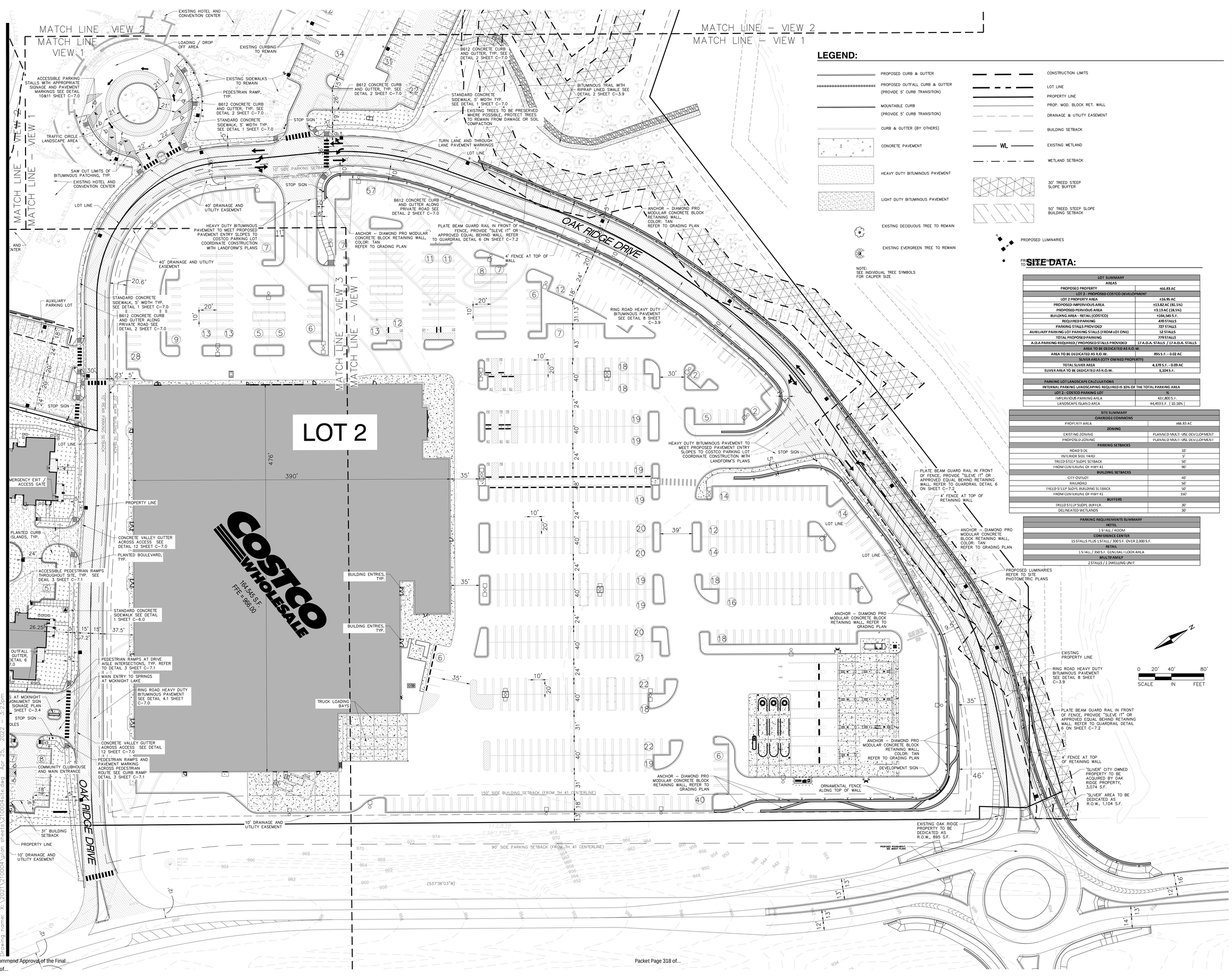

LEGEND:

- PROPOSED CURB & GUTTER
- PROPOSED OUTFALL CURB & GUTTER (PROVIDE 5' CURB TRANSITION)
- MOUNTABLE CURB (PROVIDE 5' CURB TRANSITION)
- CURB & GUTTER (BY OTHERS)
- CONCRETE PAVEMENT
- HEAVY DUTY BITUMINOUS PAVEMENT
- LIGHT DUTY BITUMINOUS PAVEMENT
- EXISTING DECIDUOUS TREE TO REMAIN
- EXISTING EVERGREEN TREE TO REMAIN

NOTE: SEE INDIVIDUAL TREE SYMBOLS FOR CALIPER SIZE

- CONSTRUCTION LIMITS
- LOT LINE
- PROPERTY LINE
- PROP. MOD. BLOCK RET. WALL
- DRAINAGE & UTILITY EASEMENT
- BUILDING SETBACK
- WL — EXISTING WETLAND
- WETLAND SETBACK
- 30' TREED STEEP SLOPE BUFFER
- 50' TREED STEEP SLOPE BUILDING SETBACK
- PROPOSED LUMINARIES
- PROPOSED LUMINARIES TO BE MOUNTED ON RETAINING WALL

SITE DATA:

LOT SUMMARY	
AREAS	
PROPOSED PROPERTY	±66.83 AC
LOT 2 - PROPOSED COSTCO DEVELOPMENT	
LOT 2 PROPERTY AREA	±16.95 AC
PROPOSED IMPERVIOUS AREA	±13.82 AC (81.5%)
PROPOSED PERVIOUS AREA	±3.13 AC (18.5%)
BUILDING AREA - RETAIL (COSTCO)	±164,545 S.F.
REQUIRED PARKING	470 STALLS
PARKING STALLS PROVIDED	727 STALLS
AUXILIARY PARKING LOT PARKING STALLS (FROM LOT ONE)	52 STALLS
TOTAL PROPOSED PARKING	779 STALLS
A.D.A PARKING REQUIRED / PROPOSED STALLS PROVIDED	17 A.D.A. STALLS / 17 A.D.A. STALLS
AREA TO BE DEDICATED AS R.O.W.	
AREA TO BE DEDICATED AS R.O.W.	895 S.F. - 0.02 AC
SLIVER AREA (CITY OWNED PROPERTY)	
TOTAL SLIVER AREA	4,178 S.F. - 0.09 AC
SLIVER AREA TO BE DEDICATED AS R.O.W.	1,104 S.F.

PARKING LOT LANDSCAPE CALCULATIONS	
INTERNAL PARKING LANDSCAPING REQUIRED IS 10% OF THE TOTAL PARKING AREA	
LOT 2 - COSTCO PARKING LOT	%
IMPERVIOUS PARKING AREA	437,800 S.F.
LANDSCAPE ISLAND AREA	44,493 S.F. (10.16%)

SITE SUMMARY	
OAKRIDGE COMMONS	
PROPERTY AREA	±66.83 AC
ZONING	
EXISTING ZONING	PLANNED MULTI-USE DEVELOPMENT
PROPOSED ZONING	PLANNED MULTI-USE DEVELOPMENT
PARKING SETBACKS	
ROAD SIDE	10'
INTERIOR SIDE YARD	5'
TREED STEEP SLOPE SETBACK	50'
FROM CENTERLINE OF HWY 41	90'
BUILDING SETBACKS	
CITY OUTLOT	40'
RAILROAD	50'
TREED STEEP SLOPE BUILDING SETBACK	50'
FROM CENTERLINE OF HWY 41	150'
BUFFERS	
TREED STEEP SLOPE BUFFER	30'
DELINEATED WETLANDS	30'

PARKING REQUIREMENTS SUMMARY
HOTEL
1 STALL / ROOM
CONFERENCE CENTER
15 STALLS PLUS 1 STALL / 300 S.F. OVER 2,000 S.F.
RETAIL
1 STALL / 350 S.F. GENERAL FLOOR AREA
MULTIFAMILY
2 STALLS / 1 DWELLING UNIT

ALLIANT
733 Marquette Avenue
Suite 700
Minneapolis, MN 55402
612.758.3080
www.alliant-inc.com

OAK RIDGE COMMONS
PLANNED UNIT DEVELOPMENT SUBMITTAL
HWY 41 & PEAVEY ROAD
CHASKA, MN

SITE PLAN - VIEW 1

I hereby certify that this plan, specification, or report was prepared by me or under my direct supervision and that I am a duly Licensed PROFESSIONAL ENGINEER under the laws of the State of MINNESOTA

CLARK WICKLUND, PE

4-25-22 — 40922
Date — License No.

QUALITY ASSURANCE/CONTROL

BY	DATE
DATE	**ISSUE**
9-7-21	PUD RESUBMITTAL
9-30-21	PROGRESS
10-11-21	PUD RESUBMITTAL
10-22-21	CITY COMMENTS
10-26-21	CITY COMMENTS
11-17-21	CCWMO RESUBMITTAL
11-17-21	BID SET
1-10-22	SIGNAGE UPDATE
2-1-22	PUD RESUBMITTAL
3-15-22	LANDSCAPE PLAN UPDATE
3-28-22	CONSTRUCTION DOCUMENTS
4-25-22	CITY & COUNTY COMMENTS

PROJECT TEAM DATA

DESIGNED: MK
DRAWN: MLS
PROJECT NO: 221-0004

C-3.1

Drawing name: X:\2021\210004\plan sheets\210004site.dwg Apr 25, 2022 - 3:23pm

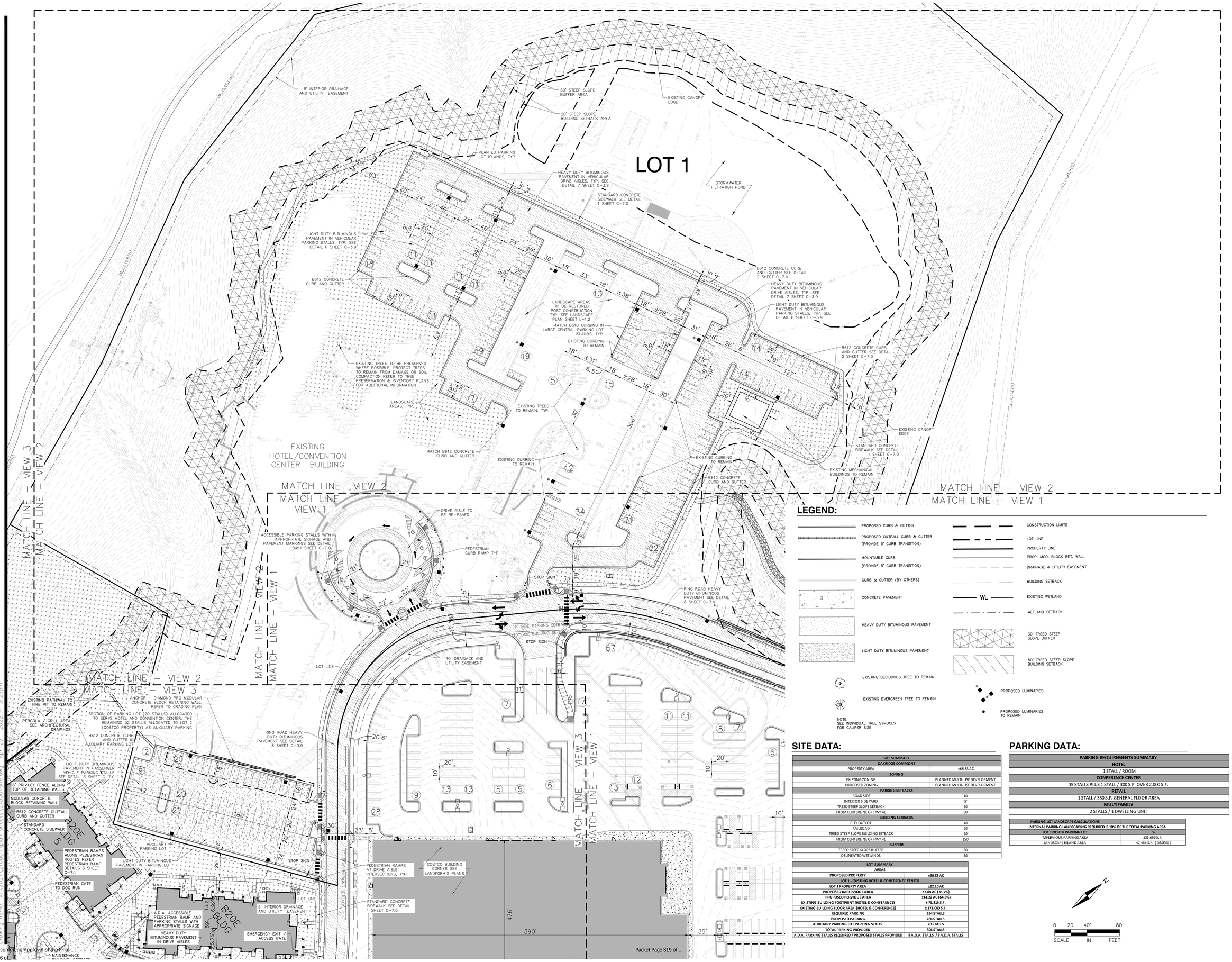

LEGEND:

- PROPOSED CURB & GUTTER
- PROPOSED OUTFALL CURB & GUTTER (PROVIDE 5' CURB TRANSITION)
- MOUNTABLE CURB (PROVIDE 5' CURB TRANSITION)
- CURB & GUTTER (BY OTHERS)
- CONCRETE PAVEMENT
- HEAVY DUTY BITUMINOUS PAVEMENT
- LIGHT DUTY BITUMINOUS PAVEMENT
- EXISTING DECIDUOUS TREE TO REMAIN
- EXISTING EVERGREEN TREE TO REMAIN
- CONSTRUCTION LIMITS
- LOT LINE
- PROPERTY LINE
- PROP. MOD. BLOCK RET. WALL
- DRAINAGE & UTILITY EASEMENT
- BUILDING SETBACK
- EXISTING WETLAND (WL)
- WETLAND SETBACK
- 30' TREED STEEP SLOPE BUFFER
- 50' TREED STEEP SLOPE BUILDING SETBACK
- PROPOSED LUMINARIES
- PROPOSED LUMINARIES TO REMAIN

NOTE:
SEE INDIVIDUAL TREE SYMBOLS FOR CALIPER SIZE

SITE DATA:

SITE SUMMARY	
OAKRIDGE COMMONS	
PROPERTY AREA	±66.83 AC
ZONING	
EXISTING ZONING	PLANNED MULTI-USE DEVELOPMENT
PROPOSED ZONING	PLANNED MULTI-USE DEVELOPMENT
PARKING SETBACKS	
ROAD SIDE	10'
INTERIOR SIDE YARD	5'
TREED STEEP SLOPE SETBACK	50'
FROM CENTERLINE OF HWY 41	90'
BUILDING SETBACKS	
CITY OUTLOT	40'
RAILROAD	50'
TREED STEEP SLOPE BUILDING SETBACK	50'
FROM CENTERLINE OF HWY 41	150'
BUFFERS	
TREED STEEP SLOPE BUFFER	30'
DELINEATED WETLANDS	30'

LOT SUMMARY	
AREAS	
PROPOSED PROPERTY	**±66.83 AC**
LOT 1 - EXISTING HOTEL & CONFERENCE CENTER	
LOT 1 PROPERTY AREA	**±22.10 AC**
PROPOSED IMPERVIOUS AREA	**±7.88 AC (35.7%)**
PROPOSED PERVIOUS AREA	**±14.22 AC (64.3%)**
EXISTING BUILDING FOOTPRINT (HOTEL & CONFERENCE)	**± 75,815 S.F.**
EXISTING BUILDING FLOOR AREA (HOTEL & CONFERENCE)	**± 171,000 S.F.**
REQUIRED PARKING	**294 STALLS**
PROPOSED PARKING	**286 STALLS**
AUXILIARY PARKING LOT PARKING STALLS	**20 STALLS**
TOTAL PARKING PROVIDED	**306 STALLS**
A.D.A. PARKING STALLS REQUIRED / PROPOSED STALLS PROVIDED	**8 A.D.A. STALLS / 8 A.D.A. STALLS**

PARKING DATA:

PARKING REQUIREMENTS SUMMARY
HOTEL
1 STALL / ROOM
CONFERENCE CENTER
15 STALLS PLUS 1 STALL / 300 S.F. OVER 2,000 S.F.
RETAIL
1 STALL / 350 S.F. GENERAL FLOOR AREA
MULTIFAMILY
2 STALLS / 1 DWELLING UNIT

PARKING LOT LANDSCAPE CALCULATIONS	
INTERNAL PARKING LANDSCAPING REQUIRED IS 10% OF THE TOTAL PARKING AREA	
LOT 1 NORTH PARKING LOT	%
IMPERVIOUS PARKING AREA	131,695 S.F.
LANDSCAPE ISLAND AREA	47,455 S.F. [36.03%]

0 20' 40' 80'
SCALE IN FEET

ALLIANT
733 Marquette Avenue
Suite 700
Minneapolis, MN 55402
612.758.3080
www.alliant-inc.com

OAK RIDGE COMMONS
PLANNED UNIT DEVELOPMENT SUBMITTAL
HWY 41 & PEAVEY ROAD
CHASKA, MN

SITE PLAN - VIEW 2

I hereby certify that this plan, specification, or report was prepared by me or under my direct supervision and that I am a duly Licensed PROFESSIONAL ENGINEER under the laws of the State of MINNESOTA

CLARK WICKLUND, PE
4-25-22 — Date
40922 — License No.

QUALITY ASSURANCE/CONTROL
BY — DATE

DATE	ISSUE
9-7-21	PUD RESUBMITTAL
9-30-21	PROGRESS
10-11-21	PUD RESUBMITTAL
10-22-21	CITY COMMENTS
10-26-21	CITY COMMENTS
11-17-21	CCWMO RESUBMITTAL
11-17-21	BID SET
1-10-22	SIGNAGE UPDATE
2-1-22	PUD RESUBMITTAL
3-15-22	LANDSCAPE PLAN UPDATE
3-28-22	CONSTRUCTION DOCUMENTS
4-25-22	CITY & COUNTY COMMENTS

PROJECT TEAM DATA
DESIGNED: MK
DRAWN: MLS
PROJECT NO: 221-0004

C-3.2

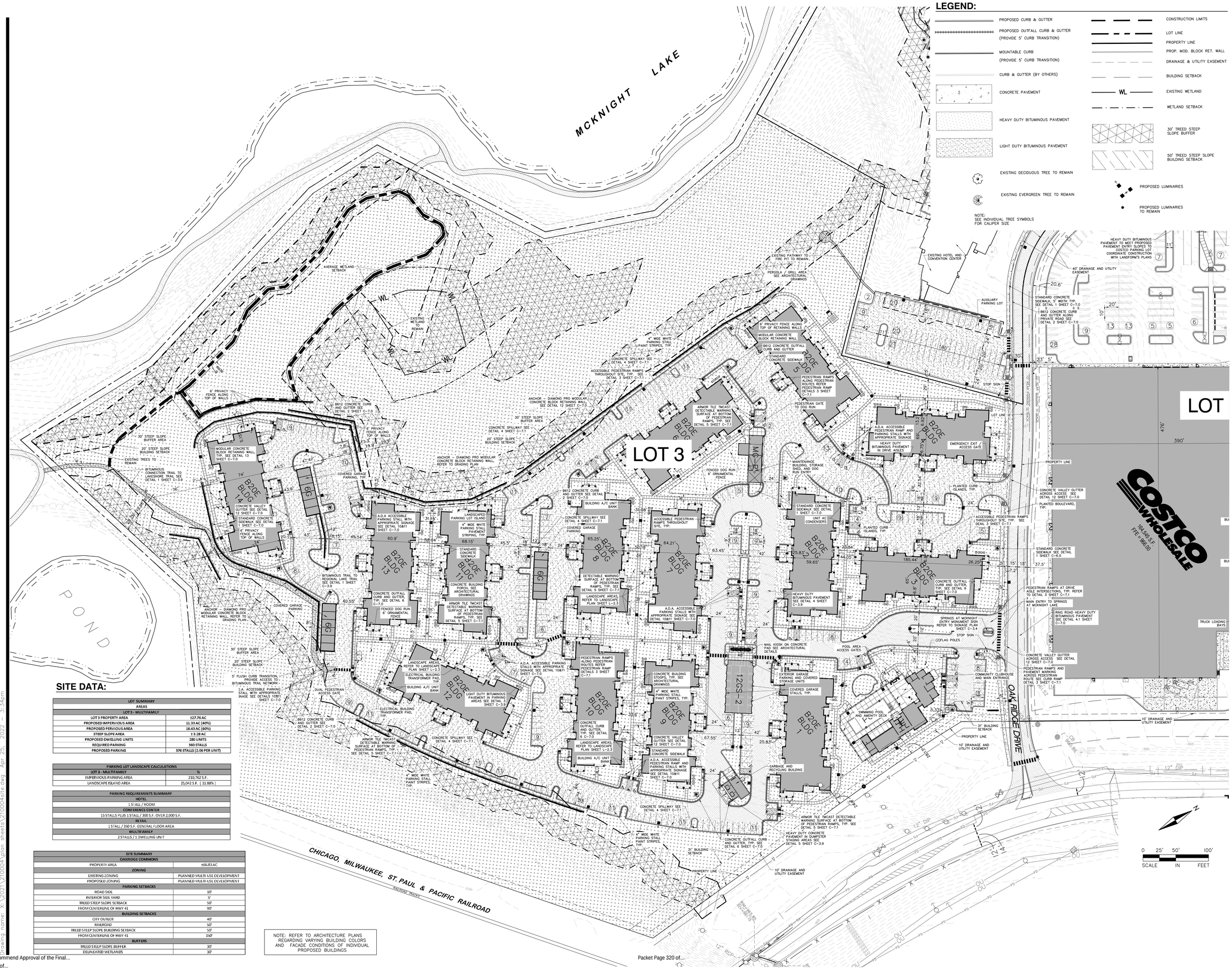

LEGEND:

- PROPOSED CURB & GUTTER
- PROPOSED OUTFALL CURB & GUTTER (PROVIDE 5' CURB TRANSITION)
- MOUNTABLE CURB (PROVIDE 5' CURB TRANSITION)
- CURB & GUTTER (BY OTHERS)
- CONCRETE PAVEMENT
- HEAVY DUTY BITUMINOUS PAVEMENT
- LIGHT DUTY BITUMINOUS PAVEMENT
- EXISTING DECIDUOUS TREE TO REMAIN
- EXISTING EVERGREEN TREE TO REMAIN
- CONSTRUCTION LIMITS
- LOT LINE
- PROPERTY LINE
- PROP. MOD. BLOCK RET. WALL
- DRAINAGE & UTILITY EASEMENT
- BUILDING SETBACK
- WL — EXISTING WETLAND
- WETLAND SETBACK
- 30' TREED STEEP SLOPE BUFFER
- 50' TREED STEEP SLOPE BUILDING SETBACK
- PROPOSED LUMINARIES
- PROPOSED LUMINARIES TO REMAIN

NOTE:
SEE INDIVIDUAL TREE SYMBOLS FOR CALIPER SIZE

SITE DATA:

LOT SUMMARY	
AREAS	
LOT 3 - MULTIFAMILY	
LOT 3 PROPERTY AREA	±27.76 AC
PROPOSED IMPERVIOUS AREA	11.33 AC (40%)
PROPOSED PERVIOUS AREA	16.43 AC (60%)
STEEP SLOPE AREA	± 3.28 AC
PROPOSED DWELLING UNITS	280 UNITS
REQUIRED PARKING	560 STALLS
PROPOSED PARKING	576 STALLS (2.06 PER UNIT)

PARKING LOT LANDSCAPE CALCULATIONS	
LOT 3 - MULTIFAMILY	**%**
IMPERVIOUS PARKING AREA	210,762 S.F.
LANDSCAPE ISLAND AREA	25,042 S.F. (11.88%)

PARKING REQUIREMENTS SUMMARY
HOTEL
1 STALL / ROOM
CONFERENCE CENTER
15 STALLS PLUS 1 STALL / 300 S.F. OVER 2,000 S.F.
RETAIL
1 STALL / 350 S.F. GENERAL FLOOR AREA
MULTI-FAMILY
2 STALLS / 1 DWELLING UNIT

SITE SUMMARY	
OAKRIDGE COMMONS	
PROPERTY AREA	±66.83 AC
ZONING	
EXISTING ZONING	PLANNED MULTI-USE DEVELOPMENT
PROPOSED ZONING	PLANNED MULTI-USE DEVELOPMENT
PARKING SETBACKS	
ROAD SIDE	10'
INTERIOR SIDE YARD	5'
TREED STEEP SLOPE SETBACK	50'
FROM CENTERLINE OF HWY 41	90'
BUILDING SETBACKS	
CITY OUTLOT	40'
RAILROAD	50'
TREED STEEP SLOPE BUILDING SETBACK	50'
FROM CENTERLINE OF HWY 41	150'
BUFFERS	
TREED STEEP SLOPE BUFFER	30'
DELINEATED WETLANDS	30'

NOTE: REFER TO ARCHITECTURE PLANS REGARDING VARYING BUILDING COLORS AND FACADE CONDITIONS OF INDIVIDUAL PROPOSED BUILDINGS

ALLIANT
733 Marquette Avenue
Suite 700
Minneapolis, MN 55402
612.758.3080
www.alliant-inc.com

OAK RIDGE COMMONS
PLANNED UNIT DEVELOPMENT SUBMITTAL
HWY 41 & PEAVEY ROAD
CHASKA, MN

SITE PLAN - VIEW 3

I hereby certify that this plan, specification, or report was prepared by me or under my direct supervision and that I am a duly Licensed PROFESSIONAL ENGINEER under the laws of the State of MINNESOTA

CLARK WICKLUND, PE

4-25-22 — Date
40922 — License No.

QUALITY ASSURANCE/CONTROL

BY	DATE

DATE	ISSUE
9-7-21	PUD RESUBMITTAL
9-30-21	PROGRESS
10-11-21	PUD RESUBMITTAL
10-22-21	CITY COMMENTS
10-26-21	CITY COMMENTS
11-17-21	CCWMO RESUBMITTAL
11-17-21	BID SET
1-10-22	SIGNAGE UPDATE
2-1-22	PUD RESUBMITTAL
3-15-22	LANDSCAPE PLAN UPDATE
3-28-22	CONSTRUCTION DOCUMENTS
4-25-22	CITY & COUNTY COMMENTS

PROJECT TEAM DATA

DESIGNED:	MK
DRAWN:	MLS
PROJECT NO:	221-0004

C-3.3

Drawing name: K:\2021\211004\plan sheets\210004site.dwg Apr 25, 2022 - 3:34pm



ALLIANT
733 Marquette Avenue
Suite 700
Minneapolis, MN 55402
612.758.3080
www.alliant-inc.com

OAK RIDGE COMMONS
PLANNED UNIT DEVELOPMENT SUBMITTAL
HWY 41 & PEAVEY ROAD
CHASKA, MN

SNOW STORAGE PLAN

I hereby certify that this plan, specification, or report was prepared by me or under my direct supervision and that I am a duly Licensed PROFESSIONAL ENGINEER under the laws of the State of MINNESOTA

CLARK WICKLUND, PE

4-25-22 — Date
40922 — License No.

QUALITY ASSURANCE/CONTROL

BY	DATE

DATE	ISSUE
9-7-21	PUD RESUBMITTAL
9-30-21	PROGRESS
10-11-21	PUD RESUBMITTAL
10-22-21	CITY COMMENTS
10-26-21	CITY COMMENTS
11-17-21	CCWMO RESUBMITTAL
11-17-21	BID SET
1-10-22	SIGNAGE UPDATE
2-1-22	PUD RESUBMITTAL
3-15-22	LANDSCAPE PLAN UPDATE
3-28-22	CONSTRUCTION DOCUMENTS
4-25-22	CITY & COUNTY COMMENTS

PROJECT TEAM DATA

DESIGNED:	MK
DRAWN:	MLS
PROJECT NO:	221-0004

C-3.5

Drawing name: X:\2021\210004\plan sheets\210004snowstrage.dwg Apr 25, 2022 - 3:37pm



SECTION A-A' 1" = 5'

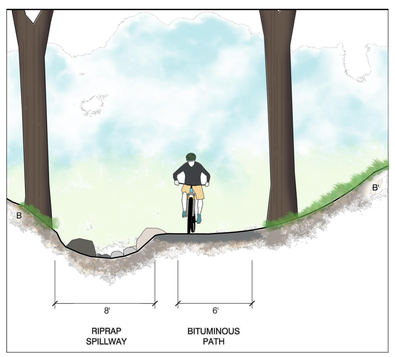

SECTION B-B' 1" = 5'

ALLIANT
733 Marquette Avenue
Suite 700
Minneapolis, MN 55402
612.758.3080
www.alliant-inc.com

OAK RIDGE COMMONS
PLANNED UNIT DEVELOPMENT SUBMITTAL
HWY 41 & PEAVEY ROAD
CHASKA, MN

PEDESTRIAN CIRCULATION PLAN

I hereby certify that this plan, specification, or report was prepared by me or under my direct supervision and that I am a duly Licensed LANDSCAPE ARCHITECT under the laws of the State of MINNESOTA

CLARK WICKLUND, PE

4-25-22 40922
Date License No.

QUALITY ASSURANCE/CONTROL

BY DATE

DATE	ISSUE
9-7-21	PUD RESUBMITTAL
9-30-21	PROGRESS
10-11-21	PUD RESUBMITTAL
10-22-21	CITY COMMENTS
10-26-21	CITY COMMENTS
11-17-21	CCWMO RESUBMITTAL
11-17-21	BID SET
1-10-22	SIGNAGE UPDATE
2-1-22	PUD RESUBMITTAL
3-15-22	LANDSCAPE PLAN UPDATE
3-28-22	CONSTRUCTION DOCUMENTS
4-25-22	CITY & COUNTY COMMENTS

PROJECT TEAM DATA
DESIGNED: MK
DRAWN: CKS
PROJECT NO: 221-0004

C-3.6

Drawing name: X:\2021\210004\exhibits\Section Exhibits\210004-sbas.dwg Apr 25, 2022 - 3:44pm



ALLIANT
733 Marquette Avenue
Suite 700
Minneapolis, MN 55402
612.758.3080
www.alliant-inc.com

OAK RIDGE COMMONS
PLANNED UNIT DEVELOPMENT SUBMITTAL
HWY 41 & PEAVEY ROAD
CHASKA, MN

OPEN SPACE PLAN

I hereby certify that this plan, specification, or report was prepared by me or under my direct supervision and that I am a duly Licensed PROFESSIONAL ENGINEER under the laws of the State of MINNESOTA

CLARK WICKLUND, PE

4-25-22 — Date
40922 — License No.

QUALITY ASSURANCE/CONTROL

BY	DATE

DATE	ISSUE
9-7-21	PUD RESUBMITTAL
9-30-21	PROGRESS
10-11-21	PUD RESUBMITTAL
10-22-21	CITY COMMENTS
10-26-21	CITY COMMENTS
11-17-21	CCWMO RESUBMITTAL
11-17-21	BID SET
1-10-22	SIGNAGE UPDATE
2-1-22	PUD RESUBMITTAL
3-15-22	LANDSCAPE PLAN UPDATE
3-28-22	CONSTRUCTION DOCUMENTS
4-25-22	CITY & COUNTY COMMENTS

PROJECT TEAM DATA
DESIGNED: MK
DRAWN: MLS
PROJECT NO: 221-0004

C-3.7

Drawing name: X:\2021\210004\plan sheets\210004openspace.dwg Apr 25, 2022 - 3:48pm

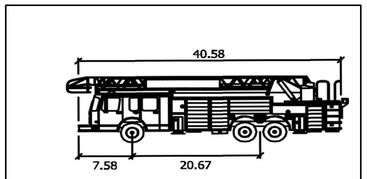

Chaska - Ladder Truck

Width	:	10.50
Track	:	7.61
Lock to Lock Time	:	6.0
Steering Angle	:	36.0

MCKNIGHT LAKE

BIG WOODS LAKE

OAK RIDGE DRIVE

CHICAGO, MILWAUKEE, ST. PAUL & PACIFIC RAILROAD

ACCESS

POND

B20E BLDG 14 · B20E BLDG 13 · B20E BLDG 11 · B20E BLDG 12 · B20E BLDG 8 · B20E BLDG 10 · B20E BLDG 7 · B20E BLDG 9 · B20E BLDG 6 · B20E BLDG 5 · B20E BLDG 4 · B20E BLDG 2 · B20E BLDG 3 · B20E BLDG 1

MP-2 · 12CS-2 · POOL · PH · GAZEBO

COSTCO WHOLESALE

ALLIANT
733 Marquette Avenue
Suite 700
Minneapolis, MN 55402
612.758.3080
www.alliant-inc.com

OAK RIDGE COMMONS
PLANNED UNIT DEVELOPMENT SUBMITTAL
HWY 41 & PEAVEY ROAD
CHASKA, MN

FIRE TRUCK MOVEMENT PLAN

I hereby certify that this plan, specification, or report was prepared by me or under my direct supervision and that I am a duly Licensed PROFESSIONAL ENGINEER under the laws of the State of MINNESOTA

CLARK WICKLUND, PE

4-25-22 — Date
40922 — License No.

QUALITY ASSURANCE/CONTROL

DATE	ISSUE	BY
9-7-21	PUD RESUBMITTAL	
9-30-21	PROGRESS	
10-11-21	PUD RESUBMITTAL	
10-22-21	CITY COMMENTS	
10-26-21	CITY COMMENTS	
11-17-21	CCWMO RESUBMITTAL	
11-17-21	BID SET	
1-10-22	SIGNAGE UPDATE	
2-1-22	PUD RESUBMITTAL	
3-15-22	LANDSCAPE PLAN UPDATE	
3-28-22	CONSTRUCTION DOCUMENTS	
4-25-22	CITY & COUNTY COMMENTS	

PROJECT TEAM DATA

DESIGNED:	MK
DRAWN:	MK
PROJECT NO:	221-0004

C-3.8

0 40' 80' 160'
SCALE IN FEET

Drawing name: X:\2021\210004\plan sheets\210004FireTruck.dwg Apr 25, 2022 - 3:54pm

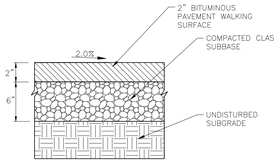

1 BITUMINOUS TRAIL
NO SCALE

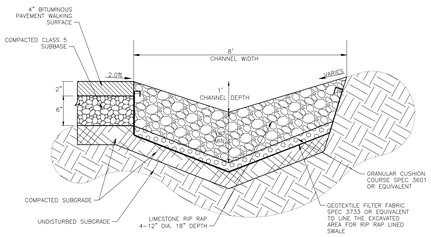

2 BITUMINOUS TRAIL WITH RIP RAP LINED SWALE
NO SCALE

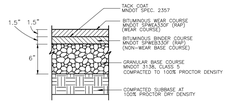

GEOTECHNICAL REPORT SUPERCEDES ALL SUBGRADE RECOMMENDATIONS.

3 SPRINGS AT McKNIGHT PROPERTY
LIGHT DUTY BITUMINOUS PAVEMENT
NO SCALE

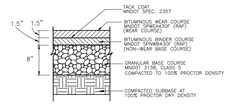

GEOTECHNICAL REPORT SUPERCEDES ALL SUBGRADE RECOMMENDATIONS.

4 SPRINGS AT MCKNIGHT PROPERTY
HEAVY DUTY BITUMINOUS PAVEMENT
NO SCALE

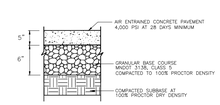

GEOTECHNICAL REPORT SUPERCEDES ALL SUBGRADE RECOMMENDATIONS.

5 SPRINGS AT MCKNIGHT PROPERTY
CONCRETE PAVEMENT
NO SCALE

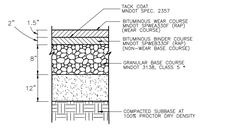

* RECYCLED CRUSHED CONCRETE DEBRIS AND BITUMINOUS PAVEMENT MAY BE USED AS BASE MATERIAL IF GRADATION SPECIFICATIONS FOR MNDOT CLASS 6 OR 7 ARE MET

GEOTECHNICAL REPORT SUPERCEDES ALL SUBGRADE RECOMMENDATIONS.

6 LIGHT DUTY BITUMINOUS PAVEMENT
NO SCALE

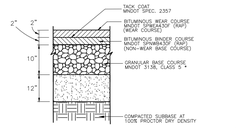

* RECYCLED CRUSHED CONCRETE DEBRIS AND BITUMINOUS PAVEMENT MAY BE USED AS BASE MATERIAL IF GRADATION SPECIFICATIONS FOR MNDOT CLASS 6 OR 7 ARE MET

GEOTECHNICAL REPORT SUPERCEDES ALL SUBGRADE RECOMMENDATIONS.

7 HEAVY DUTY BITUMINOUS PAVEMENT
(DRIVE LANES + LOADING DOCKS)
NO SCALE

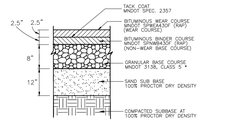

* RECYCLED CRUSHED CONCRETE DEBRIS AND BITUMINOUS PAVEMENT MAY BE USED AS BASE MATERIAL IF GRADATION SPECIFICATIONS FOR MNDOT CLASS 6 OR 7 ARE MET

GEOTECHNICAL REPORT SUPERCEDES ALL SUBGRADE RECOMMENDATIONS.

8 PRIVATE STREETS BITUMINOUS PAVEMENT
(RING ROAD)
NO SCALE

LEGEND:

- HEAVY DUTY BITUMINOUS PAVEMENT — SEE DETAIL #7, THIS SHEET
- LIGHT DUTY BITUMINOUS PAVEMENT — SEE DETAIL #6, THIS SHEET
- RING ROAD BITUMINOUS PAVEMENT — SEE DETAIL #8, THIS SHEET
- BITUMINOUS TRAIL WITH RIPRAP LINED SWALE — SEE DETAIL #1 AND #2, THIS SHEET
- STANDARD BITUMINOUS TRAIL — SEE DETAIL #1, THIS SHEET
- SPRINGS AT McKNIGHT HEAVY DUTY BITUMINOUS PAVEMENT — SEE DETAIL #4, THIS SHEET
- SPRINGS AT MCKNIGHT LIGHT DUTY BITUMINOUS PAVEMENT — SEE DETAIL #3, THIS SHEET

HEAVY DUTY BITUMINOUS PAVEMENT
LIGHT DUTY BITUMINOUS PAVEMENT
BITUMINOUS TRAIL WITH RIPRAP LINED SWALE
HEAVY DUTY BITUMINOUS PAVEMENT
LIGHT DUTY BITUMINOUS PAVEMENT
RING ROAD BITUMINOUS PAVEMENT
OAK RIDGE DRIVE
BIG WOODS LAKE
STANDARD BITUMINOUS TRAIL
POND
HEAVY DUTY BITUMINOUS PAVEMENT
CONCRETE PAVEMENT AT TRASH ENCLOSURE DRIVE UP ACCESS POINTS, SEE DETAIL #5, THIS SHEET
CHICAGO, MILWAUKEE, ST. PAUL & PACIFIC RAILROAD
OAK RIDGE DRIVE
TIE RING ROAD BITUMINOUS PAVEMENT INTO PROPOSED HIGHWAY 41 3/4 ACCESS IMPROVEMENT
TIE RING ROAD BITUMINOUS PAVEMENT INTO PROPOSED HIGHWAY 41 ROUNDABOUT IMPROVEMENT
TH. 41
TH. 41
COSTCO WHOLESALE
BLDG A
BLDG 1
BLDG 2
BLDG 3
BLDG 4
BLDG 5
BLDG 6
BLDG 7
BLDG 8
BLDG 9
BLDG 10
BLDG 11
BLDG 12
BLDG 13
BLDG 14
POOL
TRASH

N

0 40' 80' 160'
SCALE IN FEET

ALLIANT
733 Marquette Avenue
Suite 700
Minneapolis, MN 55402
612.758.3080
www.alliant-inc.com

OAK RIDGE COMMONS
PLANNED UNIT DEVELOPMENT SUBMITTAL
HWY 41 & PEAVEY ROAD
CHASKA, MN

PAVEMENT PLAN

I hereby certify that this plan, specification, or report was prepared by me or under my direct supervision and that I am a duly Licensed PROFESSIONAL ENGINEER under the laws of the State of MINNESOTA

CLARK WICKLUND, PE

4-25-22 — Date
40922 — License No.

QUALITY ASSURANCE/CONTROL

BY — DATE

DATE	ISSUE
9-7-21	PUD RESUBMITTAL
9-30-21	PROGRESS
10-11-21	PUD RESUBMITTAL
10-22-21	CITY COMMENTS
10-26-21	CITY COMMENTS
11-17-21	CCWMO RESUBMITTAL
11-17-21	BID SET
1-10-22	SIGNAGE UPDATE
2-1-22	PUD RESUBMITTAL
3-15-22	LANDSCAPE PLAN UPDATE
3-28-22	CONSTRUCTION DOCUMENTS
4-25-22	CITY & COUNTY COMMENTS

PROJECT TEAM DATA

DESIGNED: MK
DRAWN: MLS
PROJECT NO: 221-0004

C-3.9

Drawing name: X:\2021\210004\plan sheets\210004pavingplan.dwg Apr 25, 2022 - 4:00pm

LEGEND:

- EXISTING CONTOUR
- PROPOSED CONTOUR
- PROPOSED SPOT ELEVATION
- TOP OF WALL ELEVATION
- BOTTOM OF WALL ELEVATION
- DIRECTION OF DRAINAGE
- EXISTING CATCH BASINS
- EXISTING STORM SEWER
- PROPOSED CATCH BASINS
- PROPOSED STORM SEWER
- PROPOSED LIMITS OF CONSTRUCTION
- PROPERTY LINE
- PROPOSED MODULAR BLOCK RET. WALL
- INLET PROTECTION
- HEAVY DUTY SILT FENCE

WETLAND IMPACTS:

EXISTING WETLANDS:

WETLAND #1 = 2,412 SF
WETLAND #2 = 1,383 SF
WETLAND #3 = 12,504 SF

TOTAL = 16,299 SF ON SITE

WETLAND IMPACTS:

WETLAND #1 = 2,412 SF
WETLAND #2 = 1383 SF

TOTAL = 3,794 SF DISTURBED

GRADING NOTES

1. ALL PAVEMENTS SHALL SLOPE AWAY FROM PROPOSED BUILDINGS AT A MINIMUM GRADE OF 1.5%.
2. ACCESSIBLE PARKING SPACES AND ACCESS AISLE NOT TO EXCEED 2.0% IN ANY DIRECTION.
3. ALL CURB AND GUTTER AT ACCESSIBLE PARKING SPACES TO BE DEPRESSED WITH CURB TAPER, PER DETAIL.
4. THE CONTRACTOR SHALL KEEP THE ADJACENT ROADWAYS FREE OF DEBRIS AND PREVENT THE OFF-SITE TRACKING OF SOIL IN ACCORDANCE WITH THE REQUIREMENTS OF THE CITY/COUNTY.
5. NOTIFY GOPHER STATE ONE CALL, AT (800)252-1166 OR 811, 48 HOURS PRIOR TO START OF CONSTRUCTION.
6. ALL IMPROVEMENTS TO CONFORM WITH CITY AND COUNTY CONSTRUCTION STANDARDS SPECIFICATION, LATEST EDITION.
7. ROCK CONSTRUCTION ENTRANCES SHALL BE PROVIDED AT ALL CONSTRUCTION ACCESS POINTS.
8. CONTRACTOR TO KEEP A COPY OF THE FINAL DRAINAGE REPORT ON SITE AT ALL TIMES.
9. ADD 900 TO ELEVATIONS SHOWN AS 70.00 TO OBTAIN USGS ELEVATION.
10. CONTRACTOR TO SEED ALL ROUGH GRADED AREAS W/ APPROVED MNDOT TEMPORARY SEED MIX.
11. SURVEYOR TO VERIFY BENCHMARK ELEVATION PRIOR TO START OF CONSTRUCTION.
12. REFER TO GEOTECHNICAL REPORT AND PROJECT MANUAL, FOR SOIL CORRECTION REQUIREMENTS AND TESTING REQUIREMENTS.
13. STRIP TOPSOIL PRIOR TO ANY CONSTRUCTION. REUSE STOCKPILE ON SITE.
14. PRIOR TO STARTING CONSTRUCTION, THE CONTRACTOR SHALL BE RESPONSIBLE TO MAKE SURE THAT ALL REQUIRED PERMITS AND APPROVALS HAVE BEEN OBTAINED. NO CONSTRUCTION OR FABRICATION SHALL BEGIN UNTIL THE CONTRACTOR HAS RECEIVED AND THOROUGHLY REVIEWED ALL PLANS AND OTHER DOCUMENTS APPROVED BY ALL OF THE PERMITTING AUTHORITIES.
15. BUILDING PERMITS ARE REQUIRED FOR ALL RETAINING WALLS 4 FEET IN HEIGHT OR GREATER. THE WALLS SHALL BE DESIGNED BY A STRUCTURAL ENGINEER WITH DESIGN REVIEWED AND APPROVED BY THE CITY PRIOR TO INSTALLATION. ANY QUESTIONS REGARDING THE BUILDING PERMITS SHALL BE DIRECTED TO THE CITY BUILDING INSPECTOR.

MCKNIGHT LAKE

WETLAND 3

WETLAND 2

WETLAND IMPACT: 1,383 SF

POND

REFER TO LANDFORM / COSTCO DRAWINGS FOR ADDITIONAL INFORMATION

COSTCO WHOLESALE
MAIN FFE: 966.0

BIG WOODS LAKE

TH 41

WETLAND

WETLAND IMPACT: 2,412 SF

OWNER: CITY OF CHASKA
ADDRESS UNASSIGNED CHASKA
P.I.D. 300474003

CHICAGO, MILWAUKEE, ST. PAUL & PACIFIC RAILROAD

REPAIR EXISTING EROSION; FILL, GRADE, SHAPE, SEED & INSTALL EROSION CONTROL BLANKET. COORDINATE WITH CITY.

N

0 40' 80' 160'
SCALE IN FEET

ALLIANT
733 Marquette Avenue
Suite 700
Minneapolis, MN 55402
612.758.3080
www.alliant-inc.com

OAK RIDGE COMMONS
PLANNED UNIT DEVELOPMENT SUBMITTAL
HWY 41 & PEAVEY ROAD
CHASKA, MN

OVERALL GRADING PLAN

I hereby certify that this plan, specification, or report was prepared by me or under my direct supervision and that I am a duly Licensed PROFESSIONAL ENGINEER under the laws of the State of MINNESOTA

CLARK WICKLUND, PE

4-25-22 — Date
40922 — License No.

QUALITY ASSURANCE/CONTROL

BY	DATE

DATE	ISSUE
9-7-21	PUD RESUBMITTAL
9-30-21	PROGRESS
10-11-21	PUD RESUBMITTAL
10-22-21	CITY COMMENTS
10-26-21	CITY COMMENTS
11-17-21	CCWMO RESUBMITTAL
11-17-21	BID SET
1-10-22	SIGNAGE UPDATE
2-1-22	PUD RESUBMITTAL
3-15-22	LANDSCAPE PLAN UPDATE
3-28-22	CONSTRUCTION DOCUMENTS
4-25-22	CITY & COUNTY COMMENTS

PROJECT TEAM DATA

DESIGNED: MK
DRAWN: MLS
PROJECT NO: 221-0004

C-4.0

Drawing name: X:\2021\210004\plan sheets\210004grad.dwg Apr 25, 2022 - 4:03pm

GRADING NOTES

1. ALL PAVEMENTS SHALL SLOPE AWAY FROM PROPOSED BUILDINGS AT A MINIMUM GRADE OF 1.5%.
2. ACCESSIBLE PARKING SPACES AND ACCESS AISLE NOT TO EXCEED 2.0% IN ANY DIRECTION.
3. ALL CURB AND GUTTER AT ACCESSIBLE PARKING SPACES TO BE DEPRESSED WITH CURB TAPER, PER DETAIL.
4. THE CONTRACTOR SHALL KEEP THE ADJACENT ROADWAYS FREE OF DEBRIS AND PREVENT THE OFF-SITE TRACKING OF SOIL IN ACCORDANCE WITH THE REQUIREMENTS OF THE CITY/COUNTY.
5. NOTIFY GOPHER STATE ONE CALL, AT (800)252-1166 OR 811, 48 HOURS PRIOR TO START OF CONSTRUCTION.
6. ALL IMPROVEMENTS TO CONFORM WITH CITY AND COUNTY CONSTRUCTION STANDARDS SPECIFICATION, LATEST EDITION.
7. ROCK CONSTRUCTION ENTRANCES SHALL BE PROVIDED AT ALL CONSTRUCTION ACCESS POINTS.
8. CONTRACTOR TO KEEP A COPY OF THE FINAL DRAINAGE REPORT ON SITE AT ALL TIMES.
9. ADD 900 TO ELEVATIONS SHOWN AS 70.00 TO OBTAIN USGS ELEVATION.
10. CONTRACTOR TO SEED ALL ROUGH GRADED AREAS W/ APPROVED MNDOT TEMPORARY SEED MIX.
11. SURVEYOR TO VERIFY BENCHMARK ELEVATION PRIOR TO START OF CONSTRUCTION.
12. REFER TO GEOTECHNICAL REPORT AND PROJECT MANUAL, FOR SOIL CORRECTION REQUIREMENTS AND TESTING REQUIREMENTS.
13. STRIP TOPSOIL PRIOR TO ANY CONSTRUCTION. REUSE STOCKPILE ON SITE.
14. PRIOR TO STARTING CONSTRUCTION, THE CONTRACTOR SHALL BE RESPONSIBLE TO MAKE SURE THAT ALL REQUIRED PERMITS AND APPROVALS HAVE BEEN OBTAINED. NO CONSTRUCTION OR FABRICATION SHALL BEGIN UNTIL THE CONTRACTOR HAS RECEIVED AND THOROUGHLY REVIEWED ALL PLANS AND OTHER DOCUMENTS APPROVED BY ALL OF THE PERMITTING AUTHORITIES.
15. BUILDING PERMITS ARE REQUIRED FOR ALL RETAINING WALLS 4 FEET IN HEIGHT OR GREATER. THE WALLS SHALL BE DESIGNED BY A STRUCTURAL ENGINEER WITH DESIGN REVIEWED AND APPROVED BY THE CITY PRIOR TO INSTALLATION. ANY QUESTIONS REGARDING THE BUILDING PERMITS SHALL BE DIRECTED TO THE CITY BUILDING INSPECTOR.

LEGEND:

- EXISTING CONTOUR
- PROPOSED CONTOUR
- PROPOSED SPOT ELEVATION
- TOP OF WALL ELEVATION
- BOTTOM OF WALL ELEVATION
- DIRECTION OF DRAINAGE
- EXISTING CATCH BASINS
- EXISTING STORM SEWER
- PROPOSED CATCH BASINS
- PROPOSED STORM SEWER
- PROPOSED LIMITS OF CONSTRUCTION
- PROPERTY LINE
- PROPOSED MODULAR BLOCK RET. WALL
- INLET PROTECTION
- EROSION CONTROL FENCE

SCALE IN FEET: 0 20' 40' 80'

REFER TO LANDFORM / COSTCO DRAWINGS FOR ADDITIONAL INFORMATION

COSTCO WHOLESALE
164,545 S.F.
FFE = 966.00

WETLAND IMPACT: 2,412 SF

ALLIANT
733 Marquette Avenue
Suite 700
Minneapolis, MN 55402
612.758.3080
www.alliant-inc.com

OAK RIDGE COMMONS
PLANNED UNIT DEVELOPMENT SUBMITTAL
HWY 41 & PEAVEY ROAD
CHASKA, MN

GRADING PLAN - VIEW 1

I hereby certify that this plan, specification, or report was prepared by me or under my direct supervision and that I am a duly Licensed PROFESSIONAL ENGINEER under the laws of the State of MINNESOTA

CLARK WICKLUND, PE

4-25-22 — Date
40922 — License No.

QUALITY ASSURANCE/CONTROL

BY	DATE

DATE	ISSUE
9-7-21	PUD RESUBMITTAL
9-30-21	PROGRESS
10-11-21	PUD RESUBMITTAL
10-22-21	CITY COMMENTS
10-26-21	CITY COMMENTS
11-17-21	CCWMO RESUBMITTAL
11-17-21	BID SET
1-10-22	SIGNAGE UPDATE
2-1-22	PUD RESUBMITTAL
3-15-22	LANDSCAPE PLAN UPDATE
3-28-22	CONSTRUCTION DOCUMENTS
4-25-22	CITY & COUNTY COMMENTS

PROJECT TEAM DATA

DESIGNED:	MK
DRAWN:	MLS
PROJECT NO:	221-0004

C-4.1

GRADING NOTES

1. ALL PAVEMENTS SHALL SLOPE AWAY FROM PROPOSED BUILDINGS AT A MINIMUM GRADE OF 1.5%.
2. ACCESSIBLE PARKING SPACES AND ACCESS AISLE NOT TO EXCEED 2.0% IN ANY DIRECTION.
3. ALL CURB AND GUTTER AT ACCESSIBLE PARKING SPACES TO BE DEPRESSED WITH CURB TAPER, PER DETAIL.
4. THE CONTRACTOR SHALL KEEP THE ADJACENT ROADWAYS FREE OF DEBRIS AND PREVENT THE OFF-SITE TRACKING OF SOIL IN ACCORDANCE WITH THE REQUIREMENTS OF THE CITY/COUNTY.
5. NOTIFY GOPHER STATE ONE CALL, AT (800)252-1166 OR 811, 48 HOURS PRIOR TO START OF CONSTRUCTION.
6. ALL IMPROVEMENTS TO CONFORM WITH CITY AND COUNTY CONSTRUCTION STANDARDS SPECIFICATION, LATEST EDITION.
7. ROCK CONSTRUCTION ENTRANCES SHALL BE PROVIDED AT ALL CONSTRUCTION ACCESS POINTS.
8. CONTRACTOR TO KEEP A COPY OF THE FINAL DRAINAGE REPORT ON SITE AT ALL TIMES.
9. ADD 900 TO ELEVATIONS SHOWN AS 70.00 TO OBTAIN USGS ELEVATION.
10. CONTRACTOR TO SEED ALL ROUGH GRADED AREAS W/ APPROVED MNDOT TEMPORARY SEED MIX.
11. SURVEYOR TO VERIFY BENCHMARK ELEVATION PRIOR TO START OF CONSTRUCTION.
12. REFER TO GEOTECHNICAL REPORT AND PROJECT MANUAL, FOR SOIL CORRECTION REQUIREMENTS AND TESTING REQUIREMENTS.
13. STRIP TOPSOIL PRIOR TO ANY CONSTRUCTION. REUSE STOCKPILE ON SITE.
14. PRIOR TO STARTING CONSTRUCTION, THE CONTRACTOR SHALL BE RESPONSIBLE TO MAKE SURE THAT ALL REQUIRED PERMITS AND APPROVALS HAVE BEEN OBTAINED. NO CONSTRUCTION OR FABRICATION SHALL BEGIN UNTIL THE CONTRACTOR HAS RECEIVED AND THOROUGHLY REVIEWED ALL PLANS AND OTHER DOCUMENTS APPROVED BY ALL OF THE PERMITTING AUTHORITIES.
15. BUILDING PERMITS ARE REQUIRED FOR ALL RETAINING WALLS 4 FEET IN HEIGHT OR GREATER. THE WALLS SHALL BE DESIGNED BY A STRUCTURAL ENGINEER WITH DESIGN REVIEWED AND APPROVED BY THE CITY PRIOR TO INSTALLATION. ANY QUESTIONS REGARDING THE BUILDING PERMITS SHALL BE DIRECTED TO THE CITY BUILDING INSPECTOR.

LEGEND:

- EXISTING CONTOUR
- PROPOSED CONTOUR
- PROPOSED SPOT ELEVATION
- TOP OF WALL ELEVATION / BOTTOM OF WALL ELEVATION
- DIRECTION OF DRAINAGE
- EXISTING CATCH BASINS
- EXISTING STORM SEWER
- PROPOSED CATCH BASINS
- PROPOSED STORM SEWER
- PROPOSED LIMITS OF CONSTRUCTION
- PROPERTY LINE
- PROPOSED MODULAR BLOCK RET. WALL
- INLET PROTECTION
- EROSION CONTROL FENCE

SCALE 0 20' 40' 80' — IN FEET

ALLIANT
733 Marquette Avenue
Suite 700
Minneapolis, MN 55402
612.758.3080
www.alliant-inc.com

OAK RIDGE COMMONS
PLANNED UNIT DEVELOPMENT SUBMITTAL
HWY 41 & PEAVEY ROAD
CHASKA, MN

GRADING PLAN - VIEW 2

I hereby certify that this plan, specification, or report was prepared by me or under my direct supervision and that I am a duly Licensed PROFESSIONAL ENGINEER under the laws of the State of MINNESOTA

CLARK WICKLUND, PE

4-25-22 — Date
40922 — License No.

QUALITY ASSURANCE/CONTROL

BY	DATE
DATE	ISSUE
9-7-21	PUD RESUBMITTAL
9-30-21	PROGRESS
10-11-21	PUD RESUBMITTAL
10-22-21	CITY COMMENTS
10-26-21	CITY COMMENTS
11-17-21	CCWMO RESUBMITTAL
11-17-21	BID SET
1-10-22	SIGNAGE UPDATE
2-1-22	PUD RESUBMITTAL
5-15-22	LANDSCAPE PLAN UPDATE
3-28-22	CONSTRUCTION DOCUMENTS
4-25-22	CITY & COUNTY COMMENTS

PROJECT TEAM DATA

DESIGNED:	MK
DRAWN:	MLS
PROJECT NO:	221-0004

C-4.2



LEGEND:

- EXISTING CONTOUR
- PROPOSED CONTOUR
- PROPOSED SPOT ELEVATION
- TOP OF WALL ELEVATION / BOTTOM OF WALL ELEVATION
- DIRECTION OF DRAINAGE
- EXISTING CATCH BASINS
- EXISTING STORM SEWER
- PROPOSED CATCH BASINS
- PROPOSED STORM SEWER
- PROPOSED LIMITS OF CONSTRUCTION
- PROPERTY LINE
- PROPOSED MODULAR BLOCK RET. WALL
- INLET PROTECTION
- EROSION CONTROL FENCE

ALLIANT
733 Marquette Avenue
Suite 700
Minneapolis, MN 55402
612.758.3080
www.alliant-inc.com

OAK RIDGE COMMONS
PLANNED UNIT DEVELOPMENT SUBMITTAL
HWY 41 & PEAVEY ROAD
CHASKA, MN

GRADING PLAN - VIEW 3

I hereby certify that this plan, specification, or report was prepared by me or under my direct supervision and that I am a duly Licensed PROFESSIONAL ENGINEER under the laws of the State of MINNESOTA

CLARK WICKLUND, PE
4-25-22 — Date
40922 — License No.

QUALITY ASSURANCE/CONTROL

BY DATE

DATE	ISSUE
9-7-21	PUD RESUBMITTAL
9-30-21	PROGRESS
10-11-21	PUD RESUBMITTAL
10-22-21	CITY COMMENTS
10-26-21	CITY COMMENTS
11-17-21	CCWMO RESUBMITTAL
11-17-21	BID SET
1-10-22	SIGNAGE UPDATE
2-1-22	PUD RESUBMITTAL
3-15-22	LANDSCAPE PLAN UPDATE
3-28-22	CONSTRUCTION DOCUMENTS
4-25-22	CITY & COUNTY COMMENTS

PROJECT TEAM DATA
DESIGNED: MK
DRAWN: MLS
PROJECT NO: 221-0004

C-4.3

Drawing name: X:\2021\210004\plan sheets\210004grad.dwg Apr 25, 2022 - 4:10pm

LEGEND:

- EXISTING CONTOUR
- PROPOSED CONTOUR
- PROPOSED SPOT ELEVATION
- TOP OF WALL ELEVATION / BOTTOM OF WALL ELEVATION
- DIRECTION OF DRAINAGE
- EXISTING CATCH BASINS
- EXISTING STORM SEWER
- PROPOSED CATCH BASINS
- PROPOSED STORM SEWER
- PROPOSED LIMITS OF CONSTRUCTION
- PROPERTY LINE
- PROPOSED MODULAR BLOCK RET. WALL
- INLET PROTECTION
- EROSION CONTROL FENCE

FFE: 968.50
GFE: 968.16

FFE: 967.00
GFE: 966.67

FFE: 967.50
GFE: 967.17

FFE: 967.50

FFE: 967.00
GFE: 966.67

FFE: 967.00
GFE: 966.67

FFE: 967.00
GFE: 966.67

ALLIANT
733 Marquette Avenue
Suite 700
Minneapolis, MN 55402
612.758.3080
www.alliant-inc.com

OAK RIDGE COMMONS
PLANNED UNIT DEVELOPMENT SUBMITTAL
HWY 41 & PEAVEY ROAD
CHASKA, MN

GRADING PLAN - SPRINGS ENLARGEMENT PLAN 1

I hereby certify that this plan, specification, or report was prepared by me or under my direct supervision and that I am a duly Licensed PROFESSIONAL ENGINEER under the laws of the State of MINNESOTA

CLARK WICKLUND, PE
4-25-22 — Date
40922 — License No.

QUALITY ASSURANCE/CONTROL

BY	DATE
DATE	ISSUE
9-7-21	PUD RESUBMITTAL
9-30-21	PROGRESS
10-11-21	PUD RESUBMITTAL
10-22-21	CITY COMMENTS
10-26-21	CITY COMMENTS
11-17-21	CCWMO RESUBMITTAL
11-17-21	BID SET
1-10-22	SIGNAGE UPDATE
2-1-22	PUD RESUBMITTAL
3-15-22	LANDSCAPE PLAN UPDATE
3-28-22	CONSTRUCTION DOCUMENTS
4-25-22	CITY & COUNTY COMMENTS

PROJECT TEAM DATA
DESIGNED: MK
DRAWN: MLS
PROJECT NO: 221-0004

C-4.4

0 10' 20' 40'
SCALE IN FEET

Drawing name: X:\2021\21004\plan sheets\21004grad.dwg Apr 25, 2022 - 4:12pm

LEGEND:

- EXISTING CONTOUR
- PROPOSED CONTOUR
- PROPOSED SPOT ELEVATION
- TOP OF WALL ELEVATION / BOTTOM OF WALL ELEVATION
- DIRECTION OF DRAINAGE
- EXISTING CATCH BASINS
- EXISTING STORM SEWER
- PROPOSED CATCH BASINS
- PROPOSED STORM SEWER
- PROPOSED LIMITS OF CONSTRUCTION
- PROPERTY LINE
- PROPOSED MODULAR BLOCK RET. WALL
- INLET PROTECTION
- EROSION CONTROL FENCE

WETLAND 3

WETLAND 2

WETLAND IMPACT: 1,383 SF

FFE: 959.80
GFE: 959.47

FFE: 959.47

FFE: 963.80

FFE: 964.80
GFE: 964.47

FFE: 965.00
GFE: 964.67

FFE: 965.00
GFE: 964.67

FFE: 966.00

FFE: 967.00
GFE: 966.67

FFE:
GFE:

0 10' 20' 40'
SCALE IN FEET

ALLIANT
733 Marquette Avenue
Suite 700
Minneapolis, MN 55402
612.758.3080
www.alliant-inc.com

OAK RIDGE COMMONS
PLANNED UNIT DEVELOPMENT SUBMITTAL
HWY 41 & PEAVEY ROAD
CHASKA, MN

GRADING PLAN - SPRINGS ENLARGEMENT PLAN 2

I hereby certify that this plan, specification, or report was prepared by me or under my direct supervision and that I am a duly Licensed PROFESSIONAL ENGINEER under the laws of the State of MINNESOTA

CLARK WICKLUND, PE

4-25-22 — Date
40922 — License No.

QUALITY ASSURANCE/CONTROL

BY	DATE
DATE	**ISSUE**
9-7-21	PUD RESUBMITTAL
9-30-21	PROGRESS
10-11-21	PUD RESUBMITTAL
10-22-21	CITY COMMENTS
10-26-21	CITY COMMENTS
11-17-21	CCWMO RESUBMITTAL
11-17-21	BID SET
1-10-22	SIGNAGE UPDATE
2-1-22	PUD RESUBMITTAL
5-15-22	LANDSCAPE PLAN UPDATE
3-28-22	CONSTRUCTION DOCUMENTS
4-25-22	CITY & COUNTY COMMENTS

PROJECT TEAM DATA

DESIGNED:	MK
DRAWN:	MLS
PROJECT NO:	221-0004

C-4.5

Drawing name: X:\2021\210004\plan sheets\210004grad.dwg Apr 25, 2022 - 4:14pm

FFE: 967.00
GFE: 966.67

FFE: 967.00
GFE: 966.67

FFE: 967.00
GFE: 966.67

FFE: 966.00
GFE: 965.67

FFE: 966.50
GFE: 966.16

FFE: 966.16

FFE: 966.50

FFE: 967.00
GFE: 966.67

FFE: 966.50

PROPOSED PONDING IN R.O.W. REFER TO HWY 41 RIGHT OF WAY PLAN SET BY OTHERS

OAKRIDGE DRIVE

12" D.I.P.

LEGEND:

- EXISTING CONTOUR
- PROPOSED CONTOUR
- PROPOSED SPOT ELEVATION
- TOP OF WALL ELEVATION / BOTTOM OF WALL ELEVATION
- DIRECTION OF DRAINAGE
- EXISTING CATCH BASINS
- EXISTING STORM SEWER
- PROPOSED CATCH BASINS
- PROPOSED STORM SEWER
- PROPOSED LIMITS OF CONSTRUCTION
- PROPERTY LINE
- PROPOSED MODULAR BLOCK RET. WALL
- INLET PROTECTION
- EROSION CONTROL FENCE

SCALE IN FEET: 0 10' 20' 40'

ALLIANT
733 Marquette Avenue
Suite 700
Minneapolis, MN 55402
612.758.3080
www.alliant-inc.com

OAK RIDGE COMMONS
PLANNED UNIT DEVELOPMENT SUBMITTAL
HWY 41 & PEAVEY ROAD
CHASKA, MN

GRADING PLAN - SPRINGS ENLARGEMENT PLAN 3

I hereby certify that this plan, specification, or report was prepared by me or under my direct supervision and that I am a duly Licensed PROFESSIONAL ENGINEER under the laws of the State of MINNESOTA

CLARK WICKLUND, PE

4-25-22 — Date
40922 — License No.

QUALITY ASSURANCE/CONTROL

BY	DATE

DATE	ISSUE
9-7-21	PUD RESUBMITTAL
9-30-21	PROGRESS
10-11-21	PUD RESUBMITTAL
10-22-21	CITY COMMENTS
10-26-21	CITY COMMENTS
11-17-21	CCWMO RESUBMITTAL
11-17-21	BID SET
1-10-22	SIGNAGE UPDATE
2-1-22	PUD RESUBMITTAL
3-15-22	LANDSCAPE PLAN UPDATE
3-28-22	CONSTRUCTION DOCUMENTS
4-25-22	CITY & COUNTY COMMENTS

PROJECT TEAM DATA

DESIGNED:	MK
DRAWN:	MLS
PROJECT NO:	221-0004

C-4.6

Drawing name: X:\2021\210004\plan sheets\210004grad.dwg Apr 25, 2022 - 4:17pm

LEGEND:

- EXISTING CONTOUR
- PROPOSED CONTOUR
- PROPOSED SPOT ELEVATION
- TOP OF WALL ELEVATION / BOTTOM OF WALL ELEVATION
- DIRECTION OF DRAINAGE
- EXISTING CATCH BASINS
- EXISTING STORM SEWER
- PROPOSED CATCH BASINS
- PROPOSED STORM SEWER
- PROPOSED LIMITS OF CONSTRUCTION
- PROPERTY LINE
- INLET PROTECTION
- HEAVY DUTY SILT FENCE

WETLAND IMPACTS:

EXISTING WETLANDS:

WETLAND #1 = 2,412 SF
WETLAND #2 = 1,383 SF
WETLAND #3 = 12,504 SF

TOTAL = 16,299 SF ON SITE

WETLAND IMPACTS:

WETLAND #1 = 2,412 SF
WETLAND #2 = 1383 SF

TOTAL = 3,794 SF DISTURBED

GRADING NOTES

1. ALL PAVEMENTS SHALL SLOPE AWAY FROM PROPOSED BUILDINGS AT A MINIMUM GRADE OF 1.5%.
2. ACCESSIBLE PARKING SPACES AND ACCESS AISLE NOT TO EXCEED 2.0% IN ANY DIRECTION.
3. ALL CURB AND GUTTER AT ACCESSIBLE PARKING SPACES TO BE DEPRESSED WITH CURB TAPER, PER DETAIL.
4. THE CONTRACTOR SHALL KEEP THE ADJACENT ROADWAYS FREE OF DEBRIS AND PREVENT THE OFF-SITE TRACKING OF SOIL IN ACCORDANCE WITH THE REQUIREMENTS OF THE CITY/COUNTY.
5. NOTIFY GOPHER STATE ONE CALL, AT (800)252-1166 OR 811, 48 HOURS PRIOR TO START OF CONSTRUCTION.
6. ALL IMPROVEMENTS TO CONFORM WITH CITY AND COUNTY CONSTRUCTION STANDARDS SPECIFICATION, LATEST EDITION.
7. ROCK CONSTRUCTION ENTRANCES SHALL BE PROVIDED AT ALL CONSTRUCTION ACCESS POINTS.
8. CONTRACTOR TO KEEP A COPY OF THE FINAL DRAINAGE REPORT ON SITE AT ALL TIMES.
9. ADD 900 TO ELEVATIONS SHOWN AS 70.00 TO OBTAIN USGS ELEVATION.
10. CONTRACTOR TO SEED ALL ROUGH GRADED AREAS W/ APPROVED MNDOT TEMPORARY SEED MIX.
11. SURVEYOR TO VERIFY BENCHMARK ELEVATION PRIOR TO START OF CONSTRUCTION.
12. REFER TO GEOTECHNICAL REPORT AND PROJECT MANUAL, FOR SOIL CORRECTION REQUIREMENTS AND TESTING REQUIREMENTS.
13. STRIP TOPSOIL PRIOR TO ANY CONSTRUCTION. REUSE STOCKPILE ON SITE.
14. PRIOR TO STARTING CONSTRUCTION, THE CONTRACTOR SHALL BE RESPONSIBLE TO MAKE SURE THAT ALL REQUIRED PERMITS AND APPROVALS HAVE BEEN OBTAINED. NO CONSTRUCTION OR FABRICATION SHALL BEGIN UNTIL THE CONTRACTOR HAS RECEIVED AND THOROUGHLY REVIEWED ALL PLANS AND OTHER DOCUMENTS APPROVED BY ALL OF THE PERMITTING AUTHORITIES.
15. BUILDING PERMITS ARE REQUIRED FOR ALL RETAINING WALLS 4 FEET IN HEIGHT OR GREATER. THE WALLS SHALL BE DESIGNED BY A STRUCTURAL ENGINEER WITH DESIGN REVIEWED AND APPROVED BY THE CITY PRIOR TO INSTALLATION. ANY QUESTIONS REGARDING THE BUILDING PERMITS SHALL BE DIRECTED TO THE CITY BUILDING INSPECTOR.



0 40' 80' 160'
SCALE IN FEET

ALLIANT
733 Marquette Avenue
Suite 700
Minneapolis, MN 55402
612.758.3080
www.alliant-inc.com

OAK RIDGE COMMONS
PLANNED UNIT DEVELOPMENT SUBMITTAL
HWY 41 & PEAVEY ROAD
CHASKA, MN

OVERALL EMERGENCY OVERFLOW PLAN

I hereby certify that this plan, specification, or report was prepared by me or under my direct supervision and that I am a duly Licensed PROFESSIONAL ENGINEER under the laws of the State of MINNESOTA

CLARK WICKLUND, PE
4-25-22 — Date
40922 — License No.

QUALITY ASSURANCE/CONTROL

BY	DATE

DATE	ISSUE
9-7-21	PUD RESUBMITTAL
9-30-21	PROGRESS
10-11-21	PUD RESUBMITTAL
10-22-21	CITY COMMENTS
10-26-21	CITY COMMENTS
11-17-21	CCWAO RESUBMITTAL
11-17-21	BID SET
1-10-22	SIGNAGE UPDATE
2-1-22	PUD RESUBMITTAL
3-15-22	LANDSCAPE PLAN UPDATE
3-28-22	CONSTRUCTION DOCUMENTS
4-25-22	CITY & COUNTY COMMENTS

PROJECT TEAM DATA

DESIGNED:	MK
DRAWN:	MLS
PROJECT NO:	221-0004

C-4.7

Drawing name: X:\2021\210004\exhibits\EOF EXHIBIT\210004grad - EOF Exhibit.dwg Apr 25, 2022 - 4:19pm

GRADING NOTES

1. ALL PAVEMENTS SHALL SLOPE AWAY FROM PROPOSED BUILDINGS AT A MINIMUM GRADE OF 1.5%.
2. ACCESSIBLE PARKING SPACES AND ACCESS AISLE NOT TO EXCEED 2.0% IN ANY DIRECTION.
3. ALL CURB AND GUTTER AT ACCESSIBLE PARKING SPACES TO BE DEPRESSED WITH CURB TAPER, PER DETAIL.
4. THE CONTRACTOR SHALL KEEP THE ADJACENT ROADWAYS FREE OF DEBRIS AND PREVENT THE OFF-SITE TRACKING OF SOIL IN ACCORDANCE WITH THE REQUIREMENTS OF THE CITY/COUNTY.
5. NOTIFY GOPHER STATE ONE CALL, AT (800)252-1166 OR 811, 48 HOURS PRIOR TO START OF CONSTRUCTION.
6. ALL IMPROVEMENTS TO CONFORM WITH CITY AND COUNTY CONSTRUCTION STANDARDS SPECIFICATION, LATEST EDITION.
7. ROCK CONSTRUCTION ENTRANCES SHALL BE PROVIDED AT ALL CONSTRUCTION ACCESS POINTS.
8. CONTRACTOR TO KEEP A COPY OF THE FINAL DRAINAGE REPORT ON SITE AT ALL TIMES.
9. ADD 900 TO ELEVATIONS SHOWN AS 70.00 TO OBTAIN USGS ELEVATION.
10. CONTRACTOR TO SEED ALL ROUGH GRADED AREAS W/ APPROVED MNDOT TEMPORARY SEED MIX.
11. SURVEYOR TO VERIFY BENCHMARK ELEVATION PRIOR TO START OF CONSTRUCTION.
12. REFER TO GEOTECHNICAL REPORT AND PROJECT MANUAL, FOR SOIL CORRECTION REQUIREMENTS AND TESTING REQUIREMENTS.
13. STRIP TOPSOIL PRIOR TO ANY CONSTRUCTION. REUSE STOCKPILE ON SITE.
14. PRIOR TO STARTING CONSTRUCTION, THE CONTRACTOR SHALL BE RESPONSIBLE TO MAKE SURE THAT ALL REQUIRED PERMITS AND APPROVALS HAVE BEEN OBTAINED. NO CONSTRUCTION OR FABRICATION SHALL BEGIN UNTIL THE CONTRACTOR HAS RECEIVED AND THOROUGHLY REVIEWED ALL PLANS AND OTHER DOCUMENTS APPROVED BY ALL OF THE PERMITTING AUTHORITIES.
15. BUILDING PERMITS ARE REQUIRED FOR ALL RETAINING WALLS 4 FEET IN HEIGHT OR GREATER. THE WALLS SHALL BE DESIGNED BY A STRUCTURAL ENGINEER WITH DESIGN REVIEWED AND APPROVED BY THE CITY PRIOR TO INSTALLATION. ANY QUESTIONS REGARDING THE BUILDING PERMITS SHALL BE DIRECTED TO THE CITY BUILDING INSPECTOR.

LEGEND:

- 964 — EXISTING CONTOUR
- 964 — PROPOSED CONTOUR
- 833.50 / 833.00 — PROPOSED SPOT ELEVATION
- TW 833.50 / BW 833.00 — TOP OF WALL ELEVATION / BOTTOM OF WALL ELEVATION
- 2.00% — DIRECTION OF DRAINAGE
- EXISTING CATCH BASINS
- EXISTING STORM SEWER
- PROPOSED CATCH BASINS
- PROPOSED STORM SEWER
- PROPOSED LIMITS OF CONSTRUCTION
- PROPERTY LINE
- INLET PROTECTION
- FILTER LOG

REFER TO LANDFORM / COSTCO DRAWINGS FOR ADDITIONAL INFORMATION

COSTCO WHOLESALE
184,545 S.F.
FFE = 966.00

APX. 1.75 ACRES OF POTENTIAL AREA ROUTES TO THIS EOF

APX. 1.75 ACRES OF POTENTIAL AREA ROUTES TO THIS EOF

963.55 EOF (TW)

963.36 EOF

964.25 EOF

964.33 EOF

961.58 EOF

959.64 EOF

957.25 EOF

963.32 EOF

962.31 EOF

0 20' 40' 80'
SCALE IN FEET

ALLIANT
733 Marquette Avenue
Suite 700
Minneapolis, MN 55402
612.758.3080
www.alliant-inc.com

OAK RIDGE COMMONS
PLANNED UNIT DEVELOPMENT SUBMITTAL
HWY 41 & PEAVEY ROAD
CHASKA, MN

EMERGENCY OVERFLOW PLAN - VIEW 1

I hereby certify that this plan, specification, or report was prepared by me or under my direct supervision and that I am a duly Licensed PROFESSIONAL ENGINEER under the laws of the State of MINNESOTA

CLARK WICKLUND, PE

4-25-22 — Date
40922 — License No.

QUALITY ASSURANCE/CONTROL

BY	DATE

DATE	ISSUE
9-7-21	PUD RESUBMITTAL
9-30-21	PROGRESS
10-11-21	PUD RESUBMITTAL
10-22-21	CITY COMMENTS
10-26-21	CITY COMMENTS
11-17-21	CCWMO RESUBMITTAL
11-17-21	BID SET
1-10-22	SIGNAGE UPDATE
2-1-22	PUD RESUBMITTAL
3-15-22	LANDSCAPE PLAN UPDATE
3-28-22	CONSTRUCTION DOCUMENTS
4-25-22	CITY & COUNTY COMMENTS

PROJECT TEAM DATA

DESIGNED:	MK
DRAWN:	MLS
PROJECT NO:	221-0004

C-4.8

Drawing name: X:\2021\210004\exhibits\EOF EXHIBIT\210004grad - EOF Exhibit.dwg Apr 25, 2022 - 4:22pm

GRADING NOTES

1. ALL PAVEMENTS SHALL SLOPE AWAY FROM PROPOSED BUILDINGS AT A MINIMUM GRADE OF 1.5%.
2. ACCESSIBLE PARKING SPACES AND ACCESS AISLE NOT TO EXCEED 2.0% IN ANY DIRECTION.
3. ALL CURB AND GUTTER AT ACCESSIBLE PARKING SPACES TO BE DEPRESSED WITH CURB TAPER, PER DETAIL.
4. THE CONTRACTOR SHALL KEEP THE ADJACENT ROADWAYS FREE OF DEBRIS AND PREVENT THE OFF-SITE TRACKING OF SOIL IN ACCORDANCE WITH THE REQUIREMENTS OF THE CITY/COUNTY.
5. NOTIFY GOPHER STATE ONE CALL, AT (800)252-1166 OR 811, 48 HOURS PRIOR TO START OF CONSTRUCTION.
6. ALL IMPROVEMENTS TO CONFORM WITH CITY AND COUNTY CONSTRUCTION STANDARDS SPECIFICATION, LATEST EDITION.
7. ROCK CONSTRUCTION ENTRANCES SHALL BE PROVIDED AT ALL CONSTRUCTION ACCESS POINTS.
8. CONTRACTOR TO KEEP A COPY OF THE FINAL DRAINAGE REPORT ON SITE AT ALL TIMES.
9. ADD 900 TO ELEVATIONS SHOWN AS 70.00 TO OBTAIN USGS ELEVATION.
10. CONTRACTOR TO SEED ALL ROUGH GRADED AREAS W/ APPROVED MNDOT TEMPORARY SEED MIX.
11. SURVEYOR TO VERIFY BENCHMARK ELEVATION PRIOR TO START OF CONSTRUCTION.
12. REFER TO GEOTECHNICAL REPORT AND PROJECT MANUAL, FOR SOIL CORRECTION REQUIREMENTS AND TESTING REQUIREMENTS.
13. STRIP TOPSOIL PRIOR TO ANY CONSTRUCTION. REUSE STOCKPILE ON SITE.
14. PRIOR TO STARTING CONSTRUCTION, THE CONTRACTOR SHALL BE RESPONSIBLE TO MAKE SURE THAT ALL REQUIRED PERMITS AND APPROVALS HAVE BEEN OBTAINED. NO CONSTRUCTION OR FABRICATION SHALL BEGIN UNTIL THE CONTRACTOR HAS RECEIVED AND THOROUGHLY REVIEWED ALL PLANS AND OTHER DOCUMENTS APPROVED BY ALL OF THE PERMITTING AUTHORITIES.
15. BUILDING PERMITS ARE REQUIRED FOR ALL RETAINING WALLS 4 FEET IN HEIGHT OR GREATER. THE WALLS SHALL BE DESIGNED BY A STRUCTURAL ENGINEER WITH DESIGN REVIEWED AND APPROVED BY THE CITY PRIOR TO INSTALLATION. ANY QUESTIONS REGARDING THE BUILDING PERMITS SHALL BE DIRECTED TO THE CITY BUILDING INSPECTOR.

LEGEND:

- EXISTING CONTOUR
- PROPOSED CONTOUR
- PROPOSED SPOT ELEVATION
- TOP OF WALL ELEVATION / BOTTOM OF WALL ELEVATION
- DIRECTION OF DRAINAGE
- EXISTING CATCH BASINS
- EXISTING STORM SEWER
- PROPOSED CATCH BASINS
- PROPOSED STORM SEWER
- PROPOSED LIMITS OF CONSTRUCTION
- PROPERTY LINE
- INLET PROTECTION
- FILTER LOG

0 20' 40' 80'
SCALE IN FEET

ALLIANT
733 Marquette Avenue
Suite 700
Minneapolis, MN 55402
612.758.3080
www.alliant-inc.com

OAK RIDGE COMMONS
PLANNED UNIT DEVELOPMENT SUBMITTAL
HWY 41 & PEAVEY ROAD
CHASKA, MN

EMERGENCY OVERFLOW PLAN - VIEW 2

I hereby certify that this plan, specification, or report was prepared by me or under my direct supervision and that I am a duly Licensed PROFESSIONAL ENGINEER under the laws of the State of MINNESOTA

CLARK WICKLUND, PE

4-25-22 — Date — 40922 License No.

QUALITY ASSURANCE/CONTROL

BY	DATE

DATE	ISSUE
9-7-21	PUD RESUBMITTAL
9-30-21	PROGRESS
10-11-21	PUD RESUBMITTAL
10-22-21	CITY COMMENTS
10-26-21	CITY COMMENTS
11-17-21	CCWMO RESUBMITTAL
11-17-21	BID SET
1-10-22	SIGNAGE UPDATE
2-1-22	PUD RESUBMITTAL
3-15-22	LANDSCAPE PLAN UPDATE
3-28-22	CONSTRUCTION DOCUMENTS
4-25-22	CITY & COUNTY COMMENTS

PROJECT TEAM DATA

DESIGNED:	MK
DRAWN:	MLS
PROJECT NO:	221-0004

C-4.9

Drawing name: X:\2021\210004\exhibits\EOF EXHIBIT\210004prod - EOF Exhibit.dwg Apr 25, 2022 - 4:24pm


MCKNIGHT LAKE
POND
CHICAGO, MILWAUKEE, ST. PAUL & PACIFIC RAILROAD
MATCH LINE - SEE SHEET C-4.20 FOR CONTINUATION
MATCH LINE - SEE SHEET C-4.30 FOR CONTINUATION
B20E BLDG 14
FFE: 959.80
GFE: 959.47
B20E BLDG 13
FFE: 964.80
GFE: 964.47
B20E BLDG 12
FFE: 965.00
GFE: 964.67
B20E BLDG 11
FFE: 965.00
GFE: 964.67
B20E BLDG 10
FFE: 966.00
GFE: 965.67
B20E BLDG 9
FFE: 966.50
GFE: 966.16
B20E BLDG 8
FFE: 967.00
GFE: 966.67
B20E BLDG 7
FFE: 967.00
GFE: 966.67
B20E BLDG 6
FFE: 967.50
GFE: 967.17
B20E BLDG 5
FFE: 968.50
GFE: 968.16
B20E BLDG 4
FFE: 967.00
GFE: 966.67
B20E BLDG 3
FFE: 967.00
GFE: 966.67
B20E BLDG 2
FFE: 967.00
GFE: 966.67
B20E BLDG 1
FFE: 967.00
GFE: 966.67
MB
FFE: 965.50
125
FFE: 966.16
FFE: 966.50
POOL
FFE: 966.50
COSTCO WHOLESALE
164,345 S.F.
FFE: 966.00
OAK RIDGE CIRCLE
APX. 1.50 ACRES OF POTENTIAL AREA ROUTES TO THIS EOF
APX. 1.80 ACRES OF POTENTIAL AREA ROUTES TO THIS EOF
APX. 0.70 ACRES OF POTENTIAL AREA ROUTES TO THIS EOF
APX. 0.67 ACRES OF POTENTIAL AREA ROUTES TO THIS EOF
APX. 3.90 ACRES OF POTENTIAL AREA ROUTES TO THIS EOF
APX. 1.75 ACRES OF POTENTIAL AREA ROUTES TO THIS EOF
APX. 1.75 ACRES OF POTENTIAL AREA ROUTES TO THIS EOF
REPAIR EXISTING EROSION, FILL WITH SOIL, PROVIDE SEED AND EROSION CONTROL BLANKET. COORDINATE WITH CITY
958.50 EOF
959.00 EOF
963.80 EOF
963.35 EOF
963.60 EOF
965.05 EOF
964.00 EOF
965.00 EOF
963.20 EOF
962.80 EOF
963.60 EOF
963.60 EOF
964.43 EOF
964.00 EOF
960.50 (EX) EOF
965.90 EOF
963.60 EOF
965.50 EOF
965.60 EOF
966.00 EOF
966.00 EOF
965.50 EOF
965.60 EOF
966.00 EOF
965.50 EOF
965.60 EOF
966.00 EOF
965.50 EOF
966.35 EOF
964.2 EOF
964.33 EOF
962.73 EOF
963.32 EOF
964.38 EOF
966.00 EOF
966.00 EOF
966.00



SWPPP LEGEND:

908	EXISTING CONTOUR
908	PROPOSED CONTOUR
FFE	FINISH FLOOR ELEVATION
2.0%	DIRECTION OF DRAINAGE
	EMERGENCY OVERFLOW ROUTING
	PROPOSED CATCH BASINS
	PROPOSED STORM SEWER
	PROPOSED LIMITS OF CONSTRUCTION
	PROPOSED EASEMENT
	PROPERTY LINE
	PROPOSED PROPERTY LINE
	PROPOSED RIGHT-OF-WAY
DD	DRAINAGE DIVIDE
	INLET PROTECTION
	HEAVY DUTY SILT FENCE
	ROCK CONSTRUCTION ENTRANCE

N

0 40' 80' 160'
SCALE IN FEET

Drawing name: X:\2021\210004\plan sheets\210004swppp.dwg Apr 25, 2022 - 4:28pm

ALLIANT
733 Marquette Avenue
Suite 700
Minneapolis, MN 55402
612.758.3080
www.alliant-inc.com

OAK RIDGE COMMONS
PLANNED UNIT DEVELOPMENT SUBMITTAL
HWY 41 & PEAVEY ROAD
CHASKA, MN

OVERALL STORMWATER POLLUTION PREVENTION PLAN

I hereby certify that this plan, specification, or report was prepared by me or under my direct supervision and that I am a duly Licensed PROFESSIONAL ENGINEER under the laws of the State of MINNESOTA

CLARK WICKLUND, PE

4-25-22 — Date
40922 — License No.

QUALITY ASSURANCE/CONTROL

BY	DATE
DATE	**ISSUE**
9-7-21	PUD RESUBMITTAL
9-30-21	PROGRESS
10-11-21	PUD RESUBMITTAL
10-22-21	CITY COMMENTS
10-26-21	CITY COMMENTS
11-17-21	CCWMO RESUBMITTAL
11-17-21	BID SET
1-10-22	SIGNAGE UPDATE
2-1-22	PUD RESUBMITTAL
3-15-22	LANDSCAPE PLAN UPDATE
3-28-22	CONSTRUCTION DOCUMENTS
4-25-22	CITY & COUNTY COMMENTS

PROJECT TEAM DATA

DESIGNED:	MK
DRAWN:	MLS
PROJECT NO:	221-0004

C-5.0

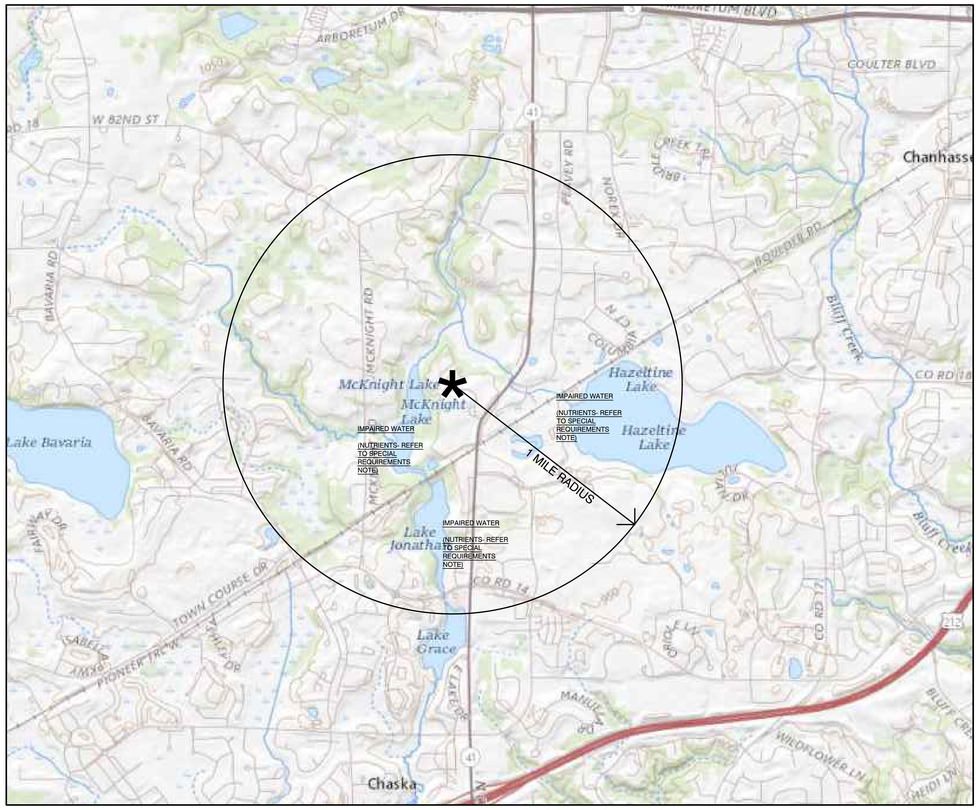

USGS TOPOGRAPHICAL MAP

NOT TO SCALE



WEB SOIL SURVEY MAP

NOT TO SCALE

Map Unit Symbol	Map Unit Name	Acres in AOI	Percent of AOI
GL	Glencoe clay loam, 0 to 1 percent slopes	9.1	3.7%
HM	Hamel loam, 0 to 2 percent slopes	12.1	4.9%
KB	Kilkenny-Lester loams, 2 to 6 percent slopes	45.8	18.6%
KB2	Lester-Kilkenny loams, 2 to 6 percent slopes, eroded	0.5	0.2%
KC	Lester-Kilkenny loams, 6 to 12 percent slopes	11.0	4.5%
KC2	Lester-Kilkenny complex, 6 to 10 percent slopes, moderately eroded	40.6	16.5%
KD	Lester-Kilkenny loams, 12 to 18 percent slopes	10.1	4.1%
KD2	Lester-Kilkenny complex, 10 to 16 percent slopes, moderately eroded	20.4	8.3%
KE2	Lester-Kilkenny complex, 16 to 22 percent slopes	11.2	4.6%
KF	Lester-Kilkenny complex, 22 to 40 percent slopes	30.3	12.3%
KM	Minneiska-Kalmarville complex, frequently flooded	19.3	7.8%
MK	Muskego and Houghton soils, 0 to 1 percent slopes	10.1	4.1%
PM	Klossner muck, 0 to 1 percent slopes	8.3	3.4%
TB	Terril loam, 2 to 6 percent slopes	10.9	4.5%
TC	Terril loam, 6 to 12 percent slopes	5.1	2.1%
W	Water	0.9	0.4%
Totals for Area of Interest		**245.6**	**100.0%**

WEB SOIL SURVEY LEGEND

IMPAIRED WATER SPECIAL REQUIREMENT:

MCKNIGHT LAKE, HAZELTINE LAKE, AND LAKE JONATHAN ARE CLASSIFIED AS AN IMPAIRED WATER. THUS, THE FOLLOWING REQUIREMENTS APPLY FOR THIS PROJECT:

23.G:
PERMITTEES MUST IMMEDIATELY INITIATE STABILIZATION OF EXPOSED SOIL AREAS, AS DESCRIBED IN ITEM B.4, AND COMPLETE THE STABILIZATION WITHIN SEVEN (7) CALENDAR DAYS AFTER THE CONSTRUCTION ACTIVITY IN THAT PORTION OF THE SITE TEMPORARILY OR PERMANENTLY CEASES.

23.I.D:
PERMITTEES MUST PROVIDE A TEMPORARY SEDIMENT BASIN AS DESCRIBED IN SECTION 14 FOR COMMON DRAINAGE LOCATIONS THAT SERVE AN AREA WITH FIVE (5) OR MORE ACRES DISTURBED AT ONE TIME.

ALSO, A MANDATORY STORMWATER POLLUTION PREVENTION PLAN (SWPPP) REVIEW IS REQUIRED BY THE MPCA IF THE PROJECT WILL DISTURB OVER 50 ACRES AND HAS A DISCHARGE POINT ON THE PROJECT WITHIN 1 MILE (AERIAL RADIUS MEASUREMENT) OF, AND FLOWS TO THE IMPAIRED WATER. OWNERS MUST SUBMIT THE APPLICATION FOR COVERAGE AND THE SWPPP AT LEAST 30 CALENDAR DAYS BEFORE THE CONSTRUCTION START DATE. THE SWPPP CAN BE ATTACHED ELECTRONICALLY WHEN USING THE ONLINE APPLICATION.

ACTIVE SWPPP LEGEND

CONSTRUCTION SEQUENCE	APR	MAY	JUN	JUL	AUG	SEP	OCT	NOV	DEC	JAN	FEB	MAR	APR
MULCH BERM													
FIBER ROLLS / MULCH SOCKS													
SILT FENCE													
TEMPORARY MULCH COVER													
TEMPORARY HYDROMULCH													
EROSION CONTROL BLANKET													
ROCK DRIVEWAY / ROCK PADS													
INLET PROTECTION DEVICES													
PAVEMENT (DRIVEWAY/ROADS)													
SOD													
STOCKPILES													

NOTE: CONTRACTOR, GENERAL CONTRACTOR OR SWPPP INSPECTOR TO COMPLETE TABLE AS GRADING PROGRESSES

EROSION CONTROL GENERAL NOTES:

1. NO LAND DISTURBING ACTIVITY SHALL OCCUR UNTIL A GRADING PERMIT HAS BEEN ISSUED FROM THE CITY OF CHASKA.
2. BEST MANAGEMENT PRACTICES (BMP'S) REFER TO EROSION AND SEDIMENT CONTROL PRACTICES DEFINED BY THE MPCA PROTECTING WATER QUALITY IN URBAN AREAS AND THE MINNESOTA CONSTRUCTION SITE EROSION AND SEDIMENT CONTROL PLANNING HANDBOOK.
3. ALL BMP'S SELECTED SHALL BE APPROPRIATE FOR THE TIME OF YEAR, SITE CONDITIONS, AND ESTIMATED DURATION OF USE.
4. ALL WORK AND MATERIALS SHALL BE CONSTRUCTED ACCORDING TO THE APPROVED PLANS. ANY DEVIATION FROM THE APPROVED PLANS SHALL REQUIRE PRIOR WRITTEN APPROVAL FROM THE ENGINEER OF RECORD.
5. A COPY OF THESE PLANS MUST BE ON THE JOB SITE WHENEVER CONSTRUCTION IS IN PROGRESS.
6. THE BOUNDARIES OF THE LAND DISTURBANCE LIMITS SHOWN ON THE PLANS SHALL BE CLEARLY FLAGGED IN THE FIELD PRIOR TO CONSTRUCTION. NO DISTURBANCE ALLOWED BEYOND THE DISTURBED LIMITS.
7. WHEREVER POSSIBLE, PRESERVE THE EXISTING TREES, GRASS, AND OTHER VEGETATIVE COVER TO HELP FILTER RUNOFF.
8. ESTABLISH A PERMANENT VEGETATIVE COVER ON ALL EXPOSED SOILS WHERE LAND IS COMING OUT OF AGRICULTURAL PRODUCTION. PLANT AS SOON AS POSSIBLE TO ESTABLISH DENSE GRASS FILTER PRIOR TO CONSTRUCTION AND TO MINIMIZE WEED GROWTH.
9. ALL TREES NOT LISTED FOR REMOVAL SHALL BE PROTECTED. DO NOT OPERATE EQUIPMENT WITHIN THE DRIPLINE, ROOT ZONES OR WITHIN TREE PROTECTION FENCE AREAS.
10. ALL EROSION AND SEDIMENT CONTROL FACILITIES (BMPs) SHALL BE INSTALLED AND IN OPERATION PRIOR TO LAND DISTURBANCE ACTIVITIES AND THEY SHALL BE SATISFACTORILY MAINTAINED UNTIL CONSTRUCTION IS COMPLETED AND THE POTENTIAL FOR EROSION HAS PASSED.
11. SILT FENCE IS REQUIRED AT DOWN GRADIENT PERIMETER OF DISTURBED AREAS AND STOCKPILES. PROTECT ADJACENT WATERBODIES AND ADJACENT PROPERTIES FROM SEDIMENTATION AND STORM WATER RUNOFF.
12. THE BMP'S SHOWN ON THE PLANS ARE THE MINIMUM REQUIREMENTS FOR THE ANTICIPATED SITE CONDITIONS. AS CONSTRUCTION PROGRESSES AND UNEXPECTED OR SEASONAL CONDITIONS OCCUR, THE PERMITTEE/CONTRACTOR SHALL ANTICIPATE THAT MORE BMP'S WILL BE NECESSARY TO ENSURE EROSION AND SEDIMENT CONTROL ON THE SITE. DURING THE COURSE OF CONSTRUCTION, IT IS THE RESPONSIBILITY OF THE PERMITTEE/CONTRACTOR TO ADDRESS ANY NEW CONDITIONS THAT MAY BE CREATED BY CONSTRUCTION ACTIVITIES AND TO PROVIDE ADDITIONAL BMP'S AS NECESSARY TO KEEP BMP'S OVER AND ABOVE THE MINIMUM REQUIREMENTS SHOWN ON THE PLANS, AS MAY BE NEEDED TO PROVIDE EFFECTIVE PROTECTION OF WATER AND SOIL RESOURCES.
13. THE BMP'S SHALL BE INSPECTED DAILY BY THE PERMITTEE/CONTRACTOR AND MAINTAINED AS NECESSARY TO ENSURE THEIR CONTINUED FUNCTIONING. SILT FENCES SHALL BE CLEANED OR REPLACED AT SEDIMENT BUILDUP OF 1/3 OF THE FENCE HEIGHT.
14. LAND DISTURBING ACTIVITIES SHALL OCCUR IN INCREMENTS OF WORKABLE SIZE SUCH THAT ADEQUATE BMP CONTROL CAN BE PROVIDED THROUGHOUT THE CONSTRUCTION PERIOD. DISTURBED AREAS THAT WILL BE EXPOSED FOR A PRACTICAL AREA SHALL BE EXPOSED OR OTHERWISE DISTURBED AT ANY ONE TIME.
15. OPERATE TRACK EQUIPMENT (DOZER) UP AND DOWN EXPOSED SOIL SLOPES ON FINAL PASS, LEAVING TRACK GROOVES PERPENDICULAR TO THE SLOPE. DO NOT BACK-BLADE. LEAVE A SURFACE ROUGH TO MINIMIZE EROSION.
16. ALL AREAS DISTURBED BY CONSTRUCTION SHALL BE STABILIZED FROM EROSION WITHIN 7 DAYS OF SUBSTANTIAL COMPLETION OF GRADING IN THAT AREA. TEMPORARY SEED AND MULCH SHALL COVER ALL EXPOSED SOILS IF GRADING DURATION IS DELAYED LONGER THAN 7 DAYS. PERMANENT SEED AND MULCH OR SOD IS REQUIRED WITHIN 3 DAYS OF COMPLETION OF FINAL GRADING.
17. GENERAL TEMPORARY SEED SHALL BE MN STATE SEED MIX 25-151 @ 40 LBS. PER ACRE OR APPROVED EQUAL. PERMANENT SEED SHALL BE MN STATE SEED MIX 25-151 @ 120 LBS. PER ACRE OR APPROVED EQUAL. SHALLOWS DATES PER MNDOT SEED MIX MANUAL. MULCH SHALL BE MNDOT TYPE 1 (CLEAN OAT STRAW) @ 2 TONS PER ACRE AND DISK ANCHORED IN PLACE OR APPROVED EQUAL. FERTILIZER SHALL BE 10-10-10 NPK PER ACRE (UNLESS P RESTRICTIONS APPLY) AND INCORPORATED INTO THE SEED BED.
18. ALL TEMPORARY EROSION AND SEDIMENT CONTROL MEASURES SHALL BE PROPERLY DISPOSED OF WITHIN THIRTY (30) DAYS AFTER FINAL SITE STABILIZATION IS ACHIEVED OR AFTER THE TEMPORARY MEASURES ARE NO LONGER NEEDED.
19. ALL CONSTRUCTION SITE WASTES SUCH AS DISCARDED BUILDING MATERIALS, CONCRETE TRUCK WASHOUT, CHEMICALS, LITTER, AND SANITARY WASTE MUST BE PROPERLY MANAGED AND COMPLY WITH THE MPCA AND [illegible] RULES AND REQUIREMENTS.

DEWATERING:

1. IF UTILITY INSTALLATION WORK ENCOUNTERS GROUNDWATER, THE CONTRACTOR SHALL PROVIDE A PLAN TO THE CITY AND PROJECT ENGINEER FOR REVIEW. THE PLAN MUST BE SUBMITTED TO THE CITY FOR APPROVAL AT LEAST 10 DAYS PRIOR TO DISCHARGING OR RECEIVING WATERS. THE PLAN AT MINIMUM SHALL INCLUDING A DEWATERING SYSTEM, WATER ROUTING, STORAGE, AND DISCHARGE LOCATION. THE DEWATERING PLAN MUST ENSURE THAT DISCHARGE WATER IS FREE OF SEDIMENT AND TURBID WATER IN ACCORDANCE WITH STATE AND LOCAL PERMIT REQUIREMENTS.
2. IF ANY TEMPORARY DEWATERING IS REQUIRED CONTRACTOR SHALL DISPOSE OF STORMWATER OR GROUND WATER BY USE OF PUMPS AND HOSES TO ACCEPTABLE DISCHARGE POINTS APPROVED BY THE CITY AND PROJECT ENGINEER.
3. ANY ACCUMULATED SEDIMENT ALONG EXISTING CURB AND GUTTER THAT HAS COLLECTED AS A RESULT OF DISCHARGING DEWATERING HOSES SHALL BE IMMEDIATELY REMOVED AND PROPERLY DISPOSED OF AFTER EACH DISCHARGING EVENT.

FILTRATION BMP NOTES:

1. INSTALLATION OF INFILTRATION/FILTRATION PRACTICES SHALL BE DONE DURING PERIODS OF DRY WEATHER AND COMPLETED BEFORE A RAINFALL EVENT. PLACEMENT OF ENGINEERED SOILS SHALL BE ON DRY NATIVE SOIL ONLY.
2. EXCAVATION OF INFILTRATION AREAS SHALL BE COMPLETED USING A BACKHOE WITH A TOOTHED BUCKET.
3. THE BOTTOM EXCAVATION SURFACE OF INFILTRATION AREAS SHALL BE LEVEL WITHOUT DIPS OR SWALES.
4. DURING CONSTRUCTION, STORM WATER MUST BE ROUTED AROUND INFILTRATION AREAS UNTIL ALL CONSTRUCTION ACTIVITY HAS CEASED AND TRIBUTARY SURFACES ARE CLEANED OF SEDIMENT.
5. ENGINEERED SOIL SHALL REMAIN UNCONTAMINATED (NOT MIXED WITH OTHER SOIL) BEFORE AND DURING INSTALLATION.

EROSION CONTROL SCHEDULE:

1. PRIOR TO ANY CONSTRUCTION OR DEMOLITION, SILT FENCE AND FILTERS SHALL BE INSTALLED AS SHOWN TO INTERCEPT RUNOFF.
2. CONTRACTOR SHALL INSTALL EROSION CONTROL DEVICES AS INDICATED ON THIS EROSION CONTROL PLAN AND ANY ADDITIONAL MEASURES REQUIRED BASED ON MEANS, METHODS AND SEQUENCES OF CONSTRUCTION.
3. ALL EROSION CONTROL INSTALLATIONS SHALL REMAIN IN PLACE AND BE MAINTAINED IN GOOD CONDITION BY THE CONTRACTOR UNTIL THE SITE HAS BEEN RE-VEGETATED. CONTRACTOR MAY REMOVE NECESSARY SILT FENCING/FILTERS TO CONSTRUCT TEMPORARY ROADWAYS, WHILE MAINTAINING ADJACENT EROSION CONTROL IN ADJACENT AREA.
4. SUFFICIENT TOPSOIL SHALL BE STOCKPILED TO ALLOW FOR THE REPLACEMENT OF 6" OF TOPSOIL FOR DISTURBED AREAS TO BE RE-VEGETATED.
5. SOIL COMPACTION SHALL BE MINIMIZED IN PROPOSED PERVIOUS AREAS ONSITE AND AVOID ALTOGETHER IN PROPOSED INFILTRATION BASINS. SOIL SURFACES IN PROPOSED PERVIOUS AREAS COMPACTED DURING CONSTRUCTION SHALL BE DECOMPACTED THROUGH SOIL AMENDMENT OR DEEP RIPPING TO AN 18" DEPTH.
6. THE CONTRACTOR SHALL SCHEDULE SITE GRADING, UTILITY INSTALLATION AND PAVEMENT CONSTRUCTION SO THAT THE GENERAL SITE CAN BE MULCHED AND RE-SEEDED SOON AFTER DISTURBANCE. AREAS THAT WILL NOT BE SUBJECT TO CONSTRUCTION TRAFFIC SHALL BE SEEDED (MN STATE SEED MIX 22-112 @ 40 LBS/AC AND MULCHED OR SODDED WITHIN SEVEN (7) DAYS OF BEING DISTURBED.

SEDIMENT CONTROL PRACTICES

1. THE CONTRACTOR MUST EMPLOY SEDIMENT CONTROL PRACTICES AS NECESSARY TO MINIMIZE SEDIMENT FROM ENTERING SURFACE WATERS, INCLUDING CURB AND GUTTER SYSTEMS AND STORM SEWER INLETS.
   a. TEMPORARY OR PERMANENT DRAINAGE DITCHES AND SEDIMENT BASINS THAT ARE DESIGNED AS PART OF A SEDIMENT CONTAINMENT SYSTEM (E.G. DITCHES WITH ROCK-CHECK DAMS) REQUIRE SEDIMENT CONTROL PRACTICES ONLY AS APPROPRIATE FOR SITE CONDITIONS.
   b. IF THE DOWN GRADIENT SEDIMENT CONTROLS ARE OVERLOADED (BASED ON FREQUENT FAILURE OR EXCESSIVE MAINTENANCE REQUIREMENTS), THE CONTRACTOR MUST INSTALL ADDITIONAL UPGRADIENT SEDIMENT CONTROL PRACTICES OR REDUNDANT BMPS TO ELIMINATE THE OVERLOADING, AND THE SWPPP MUST BE AMENDED TO IDENTIFY THESE ADDITIONAL PRACTICES AS REQUIRED IN PART III.B.1.-.3.
2. SEDIMENT CONTROL PRACTICES MUST BE ESTABLISHED ON ALL DOWN GRADIENT PERIMETERS AND BE LOCATED UPGRADIENT OF ANY BUFFER ZONES. THE PERIMETER SEDIMENT CONTROL PRACTICE MUST BE IN PLACE BEFORE ANY UPGRADIENT LAND DISTURBING ACTIVITIES BEGIN. THESE PRACTICES SHALL REMAIN IN PLACE UNTIL FINAL STABILIZATION HAS BEEN ESTABLISHED IN ACCORDANCE WITH PART IV.G. A FLOATING SILT CURTAIN PLACED IN THE WATER IS NOT A SEDIMENT CONTROL BMP TO COMPLY PERIMETER CONTROL REQUIREMENTS IN THIS PART EXCEPT WHEN WORKING ON A SHORELINE AND BELOW THE WATERLINE. IN THOSE CASES, A FLOATING SILT CURTAIN CAN BE USED AS A PERIMETER CONTROL PRACTICE. WHERE A FLOATING SILT CURTAIN IS INSTALLED AS CLOSE TO THE SHORELINE AS POSSIBLE, AND AT LEAST 50 FEET FROM THE SHORT-TERM CONSTRUCTION ACTIVITY (E.G. INSTALLATION OF RIP RAP ALONG THE SHORELINE) IN THAT AREA IS COMPLETE, AN UPLAND PERIMETER CONTROL PRACTICE MUST BE INSTALLED IF EXPOSED SOILS STILL DRAIN TO THE SURFACE WATER.
3. THE CONTRACTOR SHALL INSTALL ALL SEDIMENT CONTROL PRACTICES THAT HAVE BEEN ADJUSTED OR REMOVED TO ACCOMMODATE SHORT-TERM ACTIVITIES SUCH AS CLEARING OR GRUBBING, OR PASSAGE OF VEHICLES, IMMEDIATELY AFTER THE SHORT-TERM ACTIVITY HAS BEEN COMPLETED. THE CONTRACTOR SHALL COMPLETE ANY SHORT-TERM ACTIVITY THAT REQUIRES REMOVAL OF SEDIMENT CONTROL PRACTICES AS QUICKLY AS POSSIBLE. THE CONTRACTOR MUST RE-INSTALL SEDIMENT CONTROL PRACTICES BEFORE THE NEXT PRECIPITATION EVENT EVEN IF THE SHORT-TERM ACTIVITY IS NOT COMPLETE.
4. ALL STORM DRAIN INLETS MUST BE PROTECTED BY APPROPRIATE BMPS DURING CONSTRUCTION UNTIL ALL SOURCES WITH POTENTIAL FOR DISCHARGING TO THE INLET HAVE BEEN STABILIZED. INLET PROTECTION MAY BE REMOVED FOR A PARTICULAR INLET IF A SAFETY HAZARD (STREET FLOODING/FREEZING) HAS BEEN IDENTIFIED BY THE CONTRACTOR OR THE JURISDICTIONAL AUTHORITY (E.G., CITY/COUNTY/TOWNSHIP/MNDOT ENGINEER). THE CONTRACTOR MUST DOCUMENT THE NEED FOR REMOVAL IN THE SWPPP.
5. TEMPORARY SOIL STOCKPILES MUST HAVE SILT FENCE OR OTHER EFFECTIVE SEDIMENT CONTROLS, AND CANNOT BE PLACED IN ANY SURFACE WATERS OR SURFACE WATERS, INCLUDING STORMWATER CONVEYANCES SUCH AS CURB AND GUTTER SYSTEMS, OR CONDUITS AND DITCHES UNLESS THERE IS A BYPASS IN PLACE FOR THE STORMWATER.
6. WHERE VEHICLE TRAFFIC LEAVES ANY PART OF THE SITE (OR ONTO PAVED ROADS WITHIN THE SITE):
   a. THE CONTRACTOR MUST INSTALL A VEHICLE TRACKING BMP TO MINIMIZE THE TRACK OUT OF SEDIMENT FROM THE CONSTRUCTION SITE. EXAMPLES OF VEHICLE TRACKING BMPS INCLUDE STONE AGGREGATE PADS OR PADS, MUD MATS, SLASH MULCH, CONCRETE OR STEEL WASH RACKS, OR EQUIVALENT SYSTEMS.
   b. THE CONTRACTOR MUST USE STREET SWEEPING IF SUCH VEHICLE TRACKING BMPS ARE NOT ADEQUATE TO PREVENT SEDIMENT FROM BEING TRACKED ONTO THE STREET (SEE PART IV.E.5.D.).
7. THE CONTRACTOR MUST INSTALL TEMPORARY SEDIMENTATION BASINS AS REQUIRED IN PART III.C. OF THIS PERMIT.
8. THE CONTRACTOR MUST MINIMIZE SOIL COMPACTION AND, UNLESS INFEASIBLE, PRESERVE TOPSOIL. MINIMIZING SOIL COMPACTION IS NOT REQUIRED WHERE THE FUNCTION OF A SPECIFIC AREA OF THE SITE DICTATES THAT IT BE COMPACTED.
9. THE CONTRACTOR MUST PRESERVE A 50 FOOT NATURAL BUFFER OR (IF A BUFFER IS INFEASIBLE) USE ANOTHER SEDIMENT CONTROL BMP IMMEDIATELY ADJACENT TO WHEN A SURFACE WATER IS LOCATED WITHIN 50 FEET OF THE PROJECT'S EARTH DISTURBANCE. STORMWATER FLOWS TO THE SURFACE WATER, NATURAL BUFFERS ARE NOT REQUIRED ADJACENT TO ROAD DITCHES, JUDICIAL DITCHES, COUNTY DITCHES, STORMWATER CONVEYANCE CHANNELS, STORM DRAIN INLETS, AND SEDIMENT BASINS. THE CONTRACTOR IS/ARE NOT REQUIRED TO ENHANCE THE QUALITY OF THE VEGETATION THAT ALREADY EXISTS IN THE BUFFER OR PROVIDE VEGETATION IF NONE EXIST. HOWEVER, CONTRACTOR CAN IMPROVE THE NATURAL BUFFER WITH VEGETATION.
10. IF THE CONTRACTOR INTEND TO USE POLYMERS, FLOCCULANTS, OR OTHER SEDIMENTATION TREATMENT CHEMICALS ON THE PROJECT SITE, THE CONTRACTOR MUST COMPLY WITH THE FOLLOWING MINIMUM REQUIREMENTS:
   a. THE CONTRACTOR MUST USE CONVENTIONAL EROSION AND SEDIMENT CONTROLS PRIOR TO CHEMICAL ADDITION TO ENSURE EFFECTIVE TREATMENT. CHEMICALS MAY ONLY BE ADDED WHERE TREATED STORMWATER IS DIRECTED TO A SEDIMENT CONTROL SYSTEM WHICH ALLOWS FOR FILTRATION OR SETTLEMENT OF THE FLOC PRIOR TO DISCHARGE.
   b. CHEMICALS MUST BE SELECTED THAT ARE APPROPRIATELY SUITED TO THE TYPES OF SOILS LIKELY TO BE EXPOSED DURING CONSTRUCTION, AND TO THE EXPECTED TURBIDITY, PH, AND FLOW RATE OF STORMWATER FLOWING INTO THE CHEMICAL TREATMENT SYSTEM OR AREA.
   c. CHEMICALS MUST BE USED IN ACCORDANCE WITH ACCEPTED ENGINEERING PRACTICES, AND WITH DOSING SPECIFICATIONS AND SEDIMENT REMOVAL DESIGN SPECIFICATIONS PROVIDED BY THE MANUFACTURER OR PROVIDER/SUPPLIER OF THE APPLICABLE CHEMICALS.

WINTER STABLIZATION:

GRADING CONTRACTOR REQUIREMENTS IN THE CASE WHERE THE ONSET OF WINTER DOES NOT ALLOW FOR COMPLETION OF MASS GRADING AND FINAL SOIL STABILIZATION IN THE FALL:

1. MASS GRADING ACTIVITIES SHALL BE PLANNED AND PHASED IN A MANNER TO AVOID ANY UNNECESSARY SOIL DISTURBANCE PRIOR TO WINTER SHUT DOWN.
2. ALL FINAL GRADED AREAS SHALL BE STABILIZED PERMANENTLY BY GRADING CONTRACTOR WITH SEEDING, MULCHING, BLANKET, ETC. IN ACCORDANCE WITH PLANS PRIOR TO CONTRACTOR LEAVING THE SITE AT WINTER SHUT DOWN.
3. THE GRADING CONTRACTOR IS RESPONSIBLE TO ENSURE THAT ALL TEMPORARY OR INCOMPLETE GRADING AREAS INCLUDING ALL STOCKPILES ARE STABILIZED WITH TEMPORARY SEEDING (MN STATE SEED MIX 22-112 @ 40 LBS/AC, MULCH (MNDOT TYPE 1) BEFORE LEAVING THE SITE AT WINTER SHUT DOWN.
4. ALL SIGNIFICANT DRAINAGE SWALES (TEMPORARY OR PERMANENT) SHALL BE STABILIZED WITH MNDOT CATEGORY 3 EROSION CONTROL BLANKET BY GRADING CONTRACTOR PRIOR TO LEAVING THE SITE AT WINTER SHUT DOWN.

INSPECTIONS AND MAINTENANCE

1. THE CONTRACTOR MUST ENSURE THAT A TRAINED PERSON (AS IDENTIFIED IN ITEM 2221.2.b) WILL ROUTINELY INSPECT THE ENTIRE CONSTRUCTION SITE AT LEAST ONCE EVERY SEVEN (7) DAYS DURING ACTIVE CONSTRUCTION AND WITHIN 24 HOURS AFTER A RAINFALL EVENT GREATER THAN 0.5 INCHES IN 24 HOURS. FOLLOWING AN INSPECTION THAT OCCURS WITHIN 24 HOURS AFTER A RAINFALL EVENT, THE NEXT INSPECTION MUST BE CONDUCTED WITHIN SEVEN (7) DAYS AFTER THE RAINFALL EVENT.
2. ALL INSPECTIONS AND MAINTENANCE CONDUCTED DURING CONSTRUCTION MUST BE RECORDED WITHIN 24 HOURS IN WRITING AND THESE RECORDS MUST BE RETAINED WITH THE SWPPP IN ACCORDANCE WITH PART III.E. RECORDS OF EACH INSPECTION AND MAINTENANCE ACTIVITY SHALL INCLUDE:
   a. DATE AND TIME OF INSPECTIONS
   b. NAME OF PERSON(S) CONDUCTING INSPECTIONS
   c. FINDINGS OF INSPECTIONS, INCLUDING THE SPECIFIC LOCATION WHERE CORRECTIVE ACTIONS ARE NEEDED
   d. CORRECTIVE ACTIONS TAKEN (INCLUDING DATES, TIMES, AND PARTY COMPLETING MAINTENANCE ACTIVITIES)
   e. DATE AND AMOUNT OF ALL RAINFALL EVENTS GREATER THAN 1/2 INCH (0.5 INCHES) IN 24 HOURS. RAINFALL AMOUNTS MUST BE OBTAINED BY A PROPERLY MAINTAINED RAIN GAUGE INSTALLED ONSITE, A WEATHER STATION THAT IS WITHIN 1 MILE OF YOUR LOCATION OR A WEATHER REPORTING SYSTEM THAT PROVIDES SITE SPECIFIC RAINFALL DATA FROM RADAR SUMMARIES.
   f. IF ANY DISCHARGE IS OBSERVED TO BE OCCURRING DURING THE INSPECTION, A RECORD OF ALL POINTS OF THE PROPERTY FROM WHICH THERE IS A DISCHARGE MUST BE MADE, AND THE DISCHARGE SHOULD BE DESCRIBED (I.E., COLOR, ODOR, FLOATING, SETTLED, OR SUSPENDED SOLIDS, FOAM, OIL SHEEN, AND OTHER OBVIOUS INDICATORS OF POLLUTANTS) AND PHOTOGRAPHED.
   g. ANY AMENDMENTS TO THE SWPPP PROPOSED AS A RESULT OF THE INSPECTION MUST BE DOCUMENTED WITHIN SEVEN (7) CALENDAR DAYS.
3. INSPECTION FREQUENCY ADJUSTMENT
   a. WHERE PARTS OF THE PROJECT SITE HAVE PERMANENT COVER, BUT WORK REMAINS ON OTHER PARTS OF THE SITE, THE CONTRACTOR MAY REDUCE INSPECTIONS OF THE AREAS WITH PERMANENT COVER TO ONCE PER MONTH.
   b. WHERE CONSTRUCTION SITES HAVE PERMANENT COVER ON ALL EXPOSED SOIL AREAS AND NO CONSTRUCTION ACTIVITY IS OCCURRING ANYWHERE ON THE SITE, THE SITE MUST BE INSPECTED DURING NON-FROZEN GROUND CONDITIONS AT LEAST ONCE PER MONTH FOR A PERIOD OF TWELVE (12) CONSECUTIVE MONTHS. AFTER THIS TIME, INSPECTIONS MAY CEASE UNTIL AND NO CONSTRUCTION ACTIVITY RESUMES. INSPECTIONS MAY BE TERMINATED ENTIRELY IF CONSTRUCTION ACTIVITY IS NOT INITIATED UNLESS THE CONTRACTOR IS/ARE NOTIFIED IN WRITING BY THE MPCA THAT EROSION ISSUES HAVE BEEN DETECTED AT THE SITE AND INSPECTIONS MUST BE RESUMED.
   c. WHERE WORK HAS BEEN SUSPENDED DUE TO FROZEN GROUND CONDITIONS, THE INSPECTIONS MAY BE SUSPENDED. ALL REQUIRED INSPECTIONS AND MAINTENANCE SCHEDULE MUST BEGIN WITHIN 24 HOURS AFTER RUNOFF OCCURS AT THE SITE OR 24 HOURS PRIOR TO RESUMING CONSTRUCTION, WHICHEVER COMES FIRST.
4. THE CONTRACTOR IS/ARE RESPONSIBLE FOR THE INSPECTION AND MAINTENANCE OF TEMPORARY AND PERMANENT WATER QUALITY MANAGEMENT BMPS, AS WELL AS ALL EROSION PREVENTION AND SEDIMENT CONTROL BMPS, UNTIL ANOTHER PERMITTEE HAS OBTAINED COVERAGE UNDER THIS PERMIT OR THE PROJECT HAS UNDERGONE FINAL STABILIZATION, AND HAS NOT BEEN SUBMITTED TO THE MPCA.
5. THE CONTRACTOR MUST INSPECT ALL EROSION PREVENTION AND SEDIMENT CONTROL BMPS AND POLLUTION PREVENTION MANAGEMENT MEASURES TO ENSURE INTEGRITY AND EFFECTIVENESS DURING ALL ROUTINE AND POST-RAINFALL EVENT INSPECTIONS. ALL NONFUNCTIONAL BMPS MUST BE REPAIRED, REPLACED, OR SUPPLEMENTED WITH FUNCTIONAL BMPS BY THE END OF THE NEXT BUSINESS DAY AFTER DISCOVERY, OR AS SOON AS FIELD CONDITIONS ALLOW ACCESS UNLESS ANOTHER TIME FRAME IS SPECIFIED BELOW. THE CONTRACTOR MUST INVESTIGATE AND COMPLY WITH THE FOLLOWING INSPECTION AND MAINTENANCE REQUIREMENTS:
   a. ALL PERIMETER CONTROL DEVICES MUST BE REPAIRED, REPLACED, OR SUPPLEMENTED WHEN THEY BECOME NONFUNCTIONAL OR WHEN SEDIMENT REACHES ONE-HALF (1/2) OF THE HEIGHT OF THE DEVICE. THESE REPAIRS MUST BE MADE BY THE END OF THE NEXT BUSINESS DAY AFTER DISCOVERY, OR THEREAFTER AS SOON AS FIELD CONDITIONS ALLOW ACCESS.
   b. TEMPORARY AND PERMANENT SEDIMENTATION BASINS MUST BE DRAINED AND THE SEDIMENT REMOVED WHEN THE DEPTH OF SEDIMENT COLLECTED IN THE BASIN REACHES ONE-HALF (1/2) THE STORAGE VOLUME. DRAINAGE AND REMOVAL MUST BE COMPLETED WITHIN 72 HOURS OF DISCOVERY, OR AS SOON AS FIELD CONDITIONS ALLOW ACCESS (SEE PART IV.D.).
   c. SURFACE WATERS, INCLUDING DRAINAGE DITCHES AND CONVEYANCE SYSTEMS, MUST BE INSPECTED FOR EVIDENCE OF EROSION AND SEDIMENT DEPOSITION DURING EACH INSPECTION. THE CONTRACTOR MUST REMOVE ALL DELTAS AND SEDIMENT DEPOSITED IN SURFACE WATERS, INCLUDING DRAINAGE WAYS, CATCH BASINS, AND OTHER DRAINAGE SYSTEMS, AND RESTABILIZE THE AREAS WHERE SEDIMENT REMOVALS RESULTS IN EXPOSED SOIL. THE REMOVAL AND STABILIZATION MUST TAKE PLACE WITHIN SEVEN (7) DAYS OF DISCOVERY UNLESS PRECLUDED BY LEGAL, REGULATORY, OR PHYSICAL ACCESS CONSTRAINTS. THE CONTRACTOR SHALL USE ALL REASONABLE EFFORTS TO OBTAIN ACCESS. IF PRECLUDED, REMOVAL AND STABILIZATION MUST TAKE PLACE WITHIN SEVEN (7) CALENDAR DAYS OF OBTAINING ACCESS. THE CONTRACTOR IS/ARE RESPONSIBLE FOR CONTACTING ALL LOCAL, REGIONAL, STATE AND FEDERAL AUTHORITIES AND RECEIVING ANY APPLICABLE PERMITS, PRIOR TO CONDUCTING ANY WORK IN SURFACE WATERS.

   CONSTRUCTION SITE VEHICLE EXIT LOCATIONS MUST BE INSPECTED FOR EVIDENCE OF OFF-SITE SEDIMENT TRACKING ONTO PAVED SURFACES. TRACKED SEDIMENT MUST BE REMOVED FROM ALL PAVED SURFACES BOTH ON AND OFF SITE WITHIN 24 HOURS OF DISCOVERY, OR, IF APPLICABLE, WITHIN A SHORTER TIME TO AVOID A SAFETY HAZARD TO USERS OF PUBLIC STREETS.
   c. STREETS AND OTHER AREAS ADJACENT TO THE PROJECT MUST BE INSPECTED FOR EVIDENCE OF OFF-SITE ACCUMULATIONS OF SEDIMENT. IF SEDIMENT IS PRESENT, IT MUST BE REMOVED IN A MANNER AND AT A FREQUENCY SUFFICIENT TO MINIMIZE OFF-SITE IMPACTS (E.G., FUGITIVE SEDIMENT IN STREETS COULD BE WASHED INTO STORM SEWERS BY THE NEXT RAIN AND/OR POSE A SAFETY HAZARD TO USERS OF PUBLIC STREETS).
6. ALL INFILTRATION AREAS MUST BE INSPECTED TO ENSURE THAT NO SEDIMENT FROM ONGOING CONSTRUCTION ACTIVITY IS REACHING THE INFILTRATION AREA. ALL INFILTRATION AREAS MUST BE INSPECTED TO ENSURE THAT

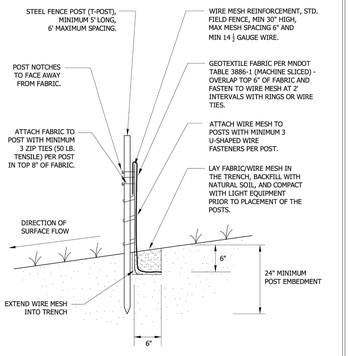

NOTE:
SPLICING WILL BE MADE AT OPPOSING SILT FENCE POSTS BY PLACING POSTS AND SILT FENCE NEXT TO EACH OTHER AND ROTATING 360°.

Stantec | SILT FENCE HEAVY DUTY | CHASKA, MINNESOTA | LAST REVISION: APRIL 2008 | PLATE NO. ERO-1B

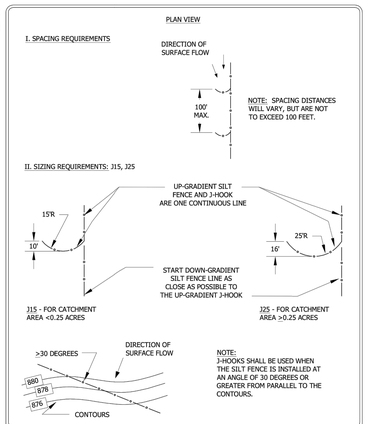

Stantec | SILT FENCE J-HOOK | CHASKA, MINNESOTA | LAST REVISION: APRIL 2008 | PLATE NO. ERO-1D

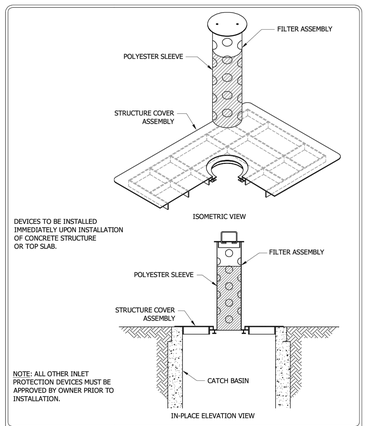

Stantec | INLET PROTECTION FOR CATCH BASIN BEFORE CURB CONSTRUCTION | CHASKA, MINNESOTA | LAST REVISION: APRIL 2008 | PLATE NO. ERO-4A

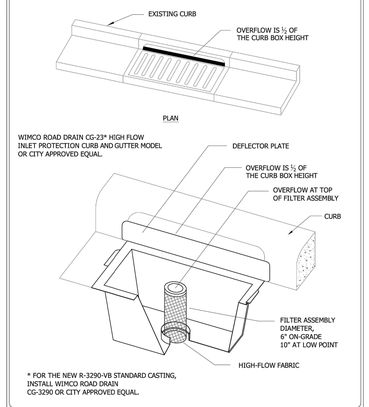

Stantec | INLET PROTECTION - CATCH BASIN INSERT AFTER CURB CONSTRUCTION | CHASKA, MINNESOTA | LAST REVISION: APRIL 2008 | PLATE NO. ERO-4B

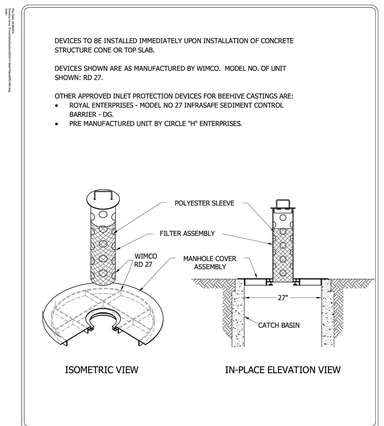

Stantec | INLET PROTECTION BEEHIVE CASTING | CHASKA, MINNESOTA | LAST REVISION: APRIL 2008 | PLATE NO. ERO-4C

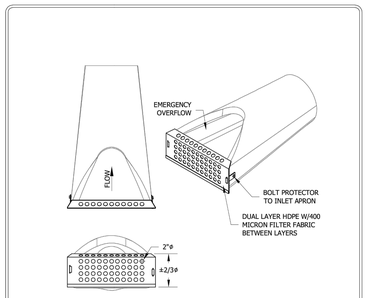

- FILTER FABRIC MAY BE REPLACED AS REQUIRED BY REMOVING BOLTS OR RIVETS CONNECTING HDPE LAYERS AND BOLTING OR RIVETING BACK TOGETHER.
- DEVICES SHOWN ARE AS MANUFACTURED BY ROYAL ENVIRONMENTAL SYSTEMS. INFRASAFE - CULVERT INLET PROTECTOR.

Stantec | FLARED END EROSION CONTROL | CHASKA, MINNESOTA | LAST REVISION: FEB 2005 | PLATE NO. ERO-6

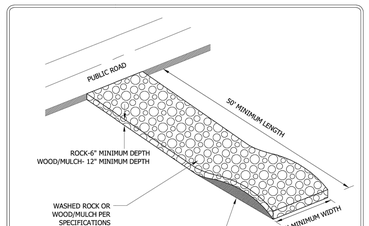

NOTES:
1. MnDOT 3733 TYPE 4 FILTER FABRIC SHALL BE PLACED UNDER ROCK OR MULCH TO STOP MUD MIGRATION THROUGH MATERIAL.
2. FUGITIVE ROCK OR MULCH WILL BE REMOVED FROM ADJACENT ROADWAYS DAILY OR MORE FREQUENTLY AS NECESSARY.
3. CONSTRUCTION ENTRANCE MUST BE CONSTRUCTED PRIOR TO THE COMMENCEMENT OF GRADING OPERATIONS ON THE SITE.
4. THE ENTRANCE MUST BE MAINTAINED IN PROPER CONDITION TO PREVENT TRACKING OF MUD OFF THE SITE. THIS MAY REQUIRE PERIODIC TOPDRESSING WITH ADDITIONAL ROCK, WOOD/MULCH, OR REMOVAL AND REINSTALLATION OF THE PAD.
5. THIS ENTRANCE WILL BE USED BY ALL VEHICLES ENTERING OR LEAVING THE PROJECT.
6. THE CONSTRUCTION ENTRANCE WILL BE REMOVED PRIOR TO THE PLACEMENT OF BITUMINOUS SURFACING.

Stantec | ROCK CONSTRUCTION ENTRANCE | CHASKA, MINNESOTA | LAST REVISION: APRIL 2008 | PLATE NO. ERO-7

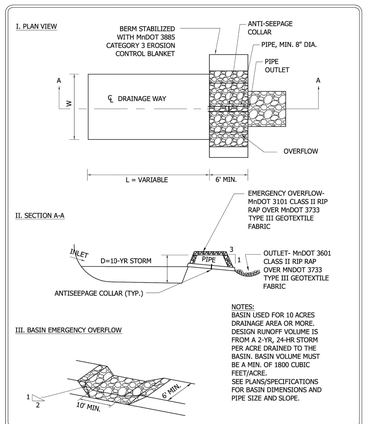

Stantec | TEMPORARY SEDIMENTATION BASIN PIPE OUTLET | CHASKA, MINNESOTA | LAST REVISION: APRIL 2008 | PLATE NO. ERO-8A

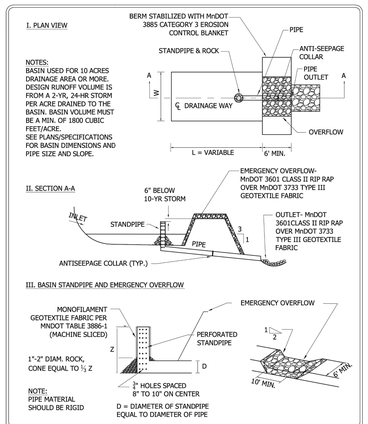

Stantec | TEMPORARY SEDIMENTATION BASIN STANDPIPE OUTLET | CHASKA, MINNESOTA | LAST REVISION: APRIL 2008 | PLATE NO. ERO-8B

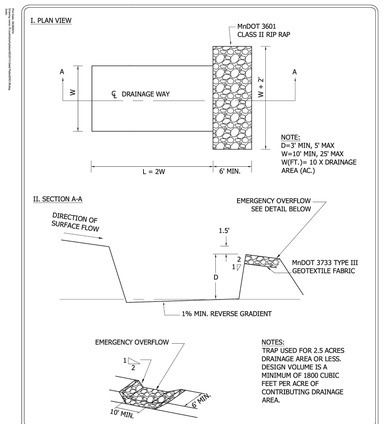

Stantec | TEMPORARY SEDIMENT TRAP | CHASKA, MINNESOTA | LAST REVISION: APRIL 2008 | PLATE NO. ERO-9

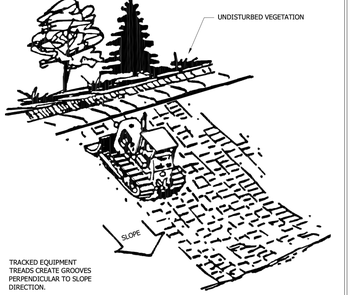

NOTE:
ALL SLOPES WITH A GRADE EQUAL TO OR STEEPER THAN 3:1 REQUIRE SLOPE TRACKING. SLOPES WITH A GRADE MORE GRADUAL THAN 3:1 REQUIRE SLOPE TRACKING IF THE STABILIZATION METHOD IS EROSION CONTROL BLANKET OR HYDROMULCH.

Stantec | SLOPE TRACKING | CHASKA, MINNESOTA | LAST REVISION: FEB 2004 | PLATE NO. ERO-10

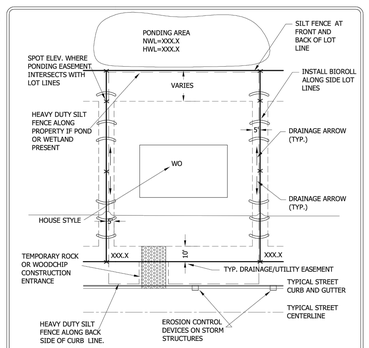

1.) INSTALL SILT FENCE PER DETAIL ERO-1A ALONG REAR AND SIDE PROPERTY LINES. INSTALL HEAVY DUTY SILT FENCE PER DETAIL ERO-1B ALONG BACK SIDE OF CURB.
2.) IF THERE IS A WETLAND OR PONDING AREA ADJACENT TO LOT, HEAVY DUTY SILT FENCE SHALL BE INSTALLED ALONG THAT SIDE OF LOT.
3.) CREATE ONE TEMPORARY CONSTRUCTION ENTRANCE PER LOT. SEE DETAIL ERO-7.
4.) INSTALL INLET PROTECTION ON ALL STORM STRUCTURES SUSCEPTIBLE TO RUNOFF FROM LOT. SEE DETAIL ERO-4B.

Stantec | EROSION CONTROL FOR LOT GRADING | CHASKA, MINNESOTA | LAST REVISION: APRIL 2011 | PLATE NO. ERO-11

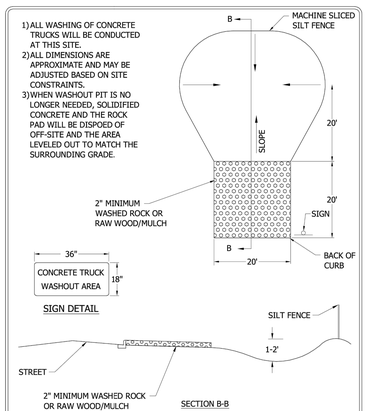

Stantec | CONCRETE WASHOUT PIT | CHASKA, MINNESOTA | LAST REVISION: April 2011 | PLATE NO. ERO-12

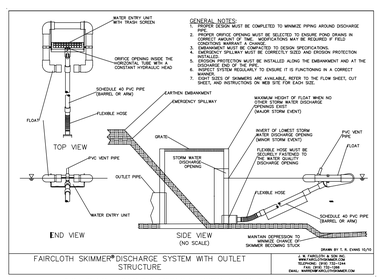

* SEE WEB SITE FOR SIZING REQUIREMENT, BASINS TO DRAIN WITHIN 48 HOURS.

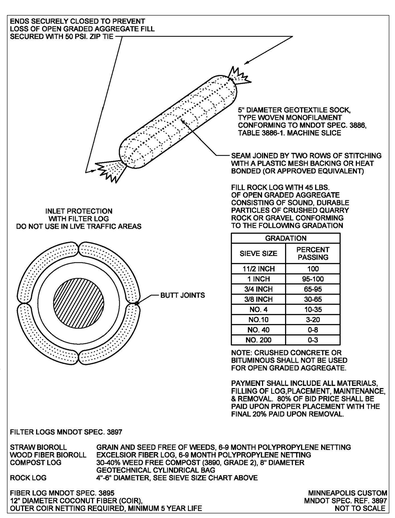

811 Know what's below. Call before you dig. Dial 811

ALLIANT
733 Marquette Avenue
Suite 700
Minneapolis, MN 55402
612.758.3080
www.alliant-inc.com

OAK RIDGE COMMONS
PLANNED UNIT DEVELOPMENT SUBMITTAL
HWY 41 & PEAVEY ROAD
CHASKA, MN

SWPPP NOTES 2

I hereby certify that this plan, specification, or report was prepared by me or under my direct supervision and that I am a duly Licensed PROFESSIONAL ENGINEER under the laws of the State of MINNESOTA

CLARK WICKLUND, PE
4-25-22 — Date
40922 — License No.

QUALITY ASSURANCE/CONTROL

BY	DATE

DATE	ISSUE
9-7-21	PUD RESUBMITTAL
9-30-21	PROGRESS
10-11-21	PUD RESUBMITTAL
10-22-21	CITY COMMENTS
10-26-21	CITY COMMENTS
11-17-21	COWMO RESUBMITTAL
11-17-21	BID SET
1-10-22	SIGNAGE UPDATE
2-1-22	PUD RESUBMITTAL
3-15-22	LANDSCAPE PLAN UPDATE
3-28-22	CONSTRUCTION DOCUMENTS
4-25-22	CITY & COUNTY COMMENTS

PROJECT TEAM DATA
DESIGNED: MK
DRAWN: MLS
PROJECT NO: 221-0004

C-5.2

Drawing name: X:\2021\210004\plan sheets\210004swppp.dwg Apr 25, 2022 - 4:28pm

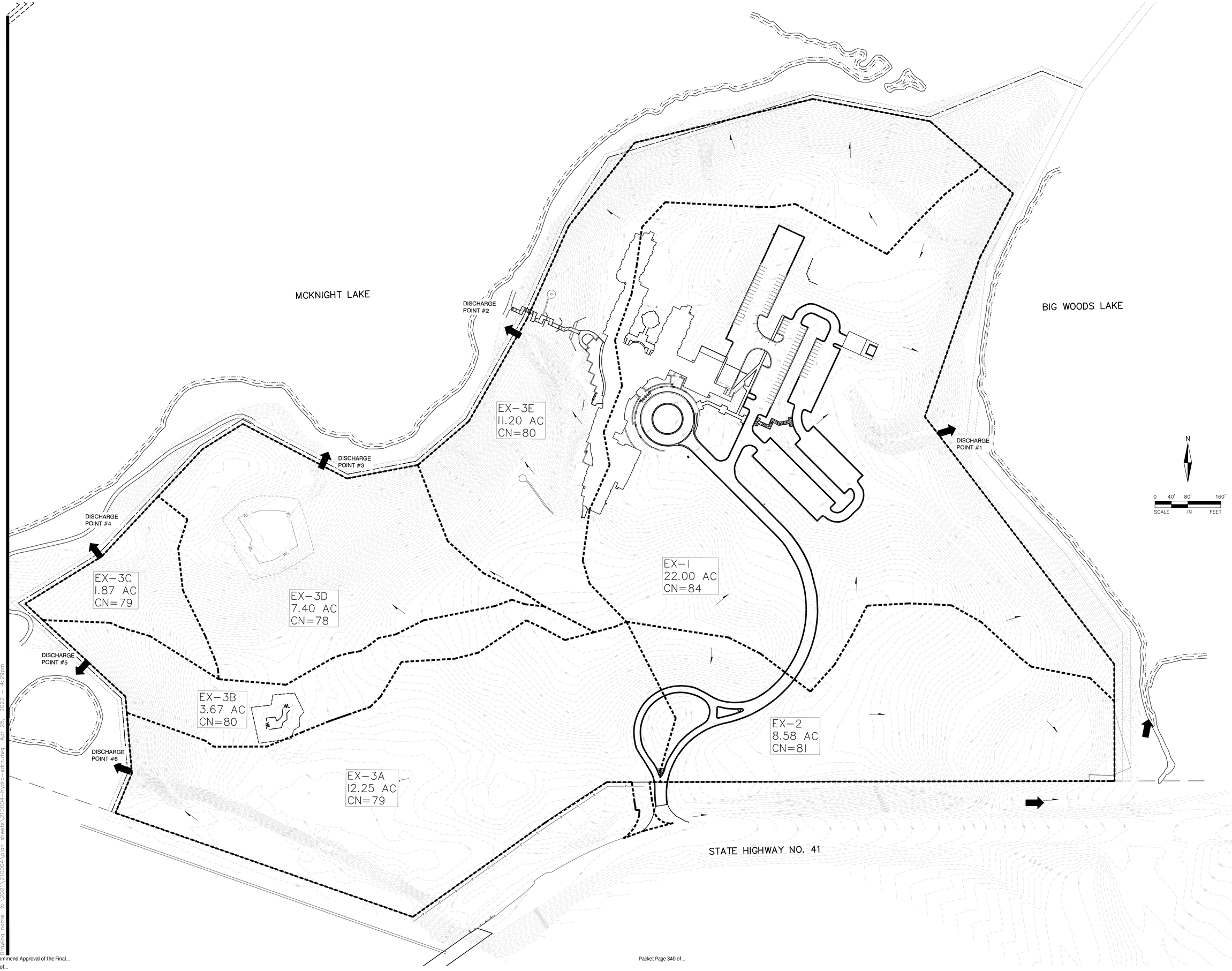

ALLIANT
733 Marquette Avenue
Suite 700
Minneapolis, MN 55402
612.758.3080
www.alliant-inc.com

OAK RIDGE COMMONS
PLANNED UNIT DEVELOPMENT SUBMITTAL
HWY 41 & PEAVEY ROAD
CHASKA, MN

STORMWATER MANAGEMENT PLAN - EXISTING

I hereby certify that this plan, specification, or report was prepared by me or under my direct supervision and that I am a duly Licensed PROFESSIONAL ENGINEER under the laws of the State of MINNESOTA

CLARK WICKLUND, PE

4-25-22 — Date
40922 — License No.

QUALITY ASSURANCE/CONTROL

BY	DATE

DATE	ISSUE
9-7-21	PUD RESUBMITTAL
9-30-21	PROGRESS
10-11-21	PUD RESUBMITTAL
10-22-21	CITY COMMENTS
10-26-21	CITY COMMENTS
11-17-21	CCWMO RESUBMITTAL
11-17-21	BID SET
1-10-22	SIGNAGE UPDATE
2-1-22	PUD RESUBMITTAL
3-15-22	LANDSCAPE PLAN UPDATE
3-28-22	CONSTRUCTION DOCUMENTS
4-25-22	CITY & COUNTY COMMENTS

PROJECT TEAM DATA
DESIGNED: MK
DRAWN: MLS
PROJECT NO: 221-0004

C-5.3

Drawing name: X:\2021\210004\plan sheets\210004-hydro-edrn.dwg Apr 25, 2022 - 4:29pm



ALLIANT
733 Marquette Avenue
Suite 700
Minneapolis, MN 55402
612.758.3080
www.alliant-inc.com

OAK RIDGE COMMONS
PLANNED UNIT DEVELOPMENT SUBMITTAL
HWY 41 & PEAVEY ROAD
CHASKA, MN

STORMWATER MANAGEMENT PLAN - PROPOSED

I hereby certify that this plan, specification, or report was prepared by me or under my direct supervision and that I am a duly Licensed PROFESSIONAL ENGINEER under the laws of the State of MINNESOTA

CLARK WICKLUND, PE

4-25-22 — Date
40922 — License No.

QUALITY ASSURANCE/CONTROL

BY	DATE

DATE	ISSUE
9-7-21	PUD RESUBMITTAL
9-30-21	PROGRESS
10-11-21	PUD RESUBMITTAL
10-22-21	CITY COMMENTS
10-26-21	CITY COMMENTS
11-17-21	CCWMO RESUBMITTAL
11-17-21	BID SET
1-10-22	SIGNAGE UPDATE
2-1-22	PUD RESUBMITTAL
3-15-22	LANDSCAPE PLAN UPDATE
3-28-22	CONSTRUCTION DOCUMENTS
4-25-22	CITY & COUNTY COMMENTS

PROJECT TEAM DATA

DESIGNED:	MK
DRAWN:	MLS
PROJECT NO:	221-0004

C-5.4

Drawing name: K:\2021\210004\plan sheets\210004-hydro-pdrn.dwg Apr 25, 2022 - 4:31pm

STORM SEWER SCHEDULE:

MH/CB FROM	MH/CB TO	P. DIA [IN]	P. SLOPE [FT/FT]	PIPE LENGTH [FT]	FROM INVERT	TO INVERT	RIM ELEV.	BUILD [FT]	STR. TYPE	CAST TYPE	PIPE CLASS
TBMH 100 (COSTCO	CBMH 400	42	0.0100	48.00	947.76	947.28	961.96	14.20			3
CB 404A	CBMH 404	12	0.0044	37.80	947.52	947.35	951.52	4.00	2'X3'	R-3067-V	5
CBMH 404	CBMH 403	18	0.0025	215.80	947.35	946.81	951.39	4.04	48"DIA	R-3067-V	3
CBMH 403	CBMH 402	18	0.0025	185.90	946.83	946.35	956.00	9.19	48"DIA	R-3067-V	3
CBMH 402	CBMH 401	18	0.0025	205.90	946.35	945.83	957.61	11.26	48"DIA	R-3067-V	3
CBMH 401	CBMH 400	18	0.0025	139.70	945.83	945.49	957.47	11.64	48"DIA	R-3067-V	3
CBMH 400	CBMH 305	42	0.0089	37.20	945.49	945.15	956.54	11.05	84"DIA	R-3067-V	3
CB 312A	CBMH 312	12	0.0044	35.90	959.51	959.35	963.41	3.90	2'X3'	R-3067-V	5
CBMH 312	CBMH 311	12	0.0044	298.80	959.35	958.04	963.37	4.02	48"DIA	R-3067-V	5
CB 311A	CBMH 311	12	0.0044	31.40	959.49	959.35	963.59	4.10	2'X3'	R-3067-V	5
CBMH 311	CBMH 310	24	0.0108	349.30	957.83	954.06	963.59	5.76	96"DIA	R-3067-V	3
CB 310A	CBMH 310	12	0.0044	31.30	959.33	959.19	964.27	4.94	2'X3'	R-3067-V	5
CBMH 310B	CBMH 310	18	0.0077	57.70	954.63	954.19	963.60	8.97	48"DIA	R-2501-GI	
CBMH 310	CBMH 309	24	0.0162	76.30	954.06	952.82	964.27	10.21	72"DIA	R-3067-V	3
CBMH 309	CBMH 308	24	0.0170	98.00	952.82	951.15	963.75	10.93	48"DIA	R-3067-V	3
CBMH 308	CBMH 307	24	0.0180	105.40	951.15	949.25	962.22	11.07	48"DIA	R-3067-V	3
CBMH 307	CBMH 306	24	0.0220	94.90	949.25	947.17	959.77	10.52	48"DIA	R-3067-V	3
CBMH 306	CBMH 305	27	0.0115	150.90	947.17	945.43	957.76	10.59	48"DIA	R-3067-V	3
CBMH 305	MH 304	42	0.0120	43.10	945.15	944.64	956.66	11.51	96"DIA	R-3067-VI	
MH 304	MH 303	42	0.0120	230.70	944.64	941.87	952.80	8.16	72"DIA	R-1733	
CBMH 303D	MH 303C	12	0.0490	82.50	947.25	943.95	951.25	4.00	2'X3'	R-2501-GI	
MH 303C	CBMH 303B	18	0.0050	106.50	943.00	942.47	952.40	9.40	60"DIA	R-2501-GI	
CB (DOCK)	CBMH 303B	12	0.0100	117.30	943.90	942.73	947.90	4.00	2'X3'	R-2501-GI	
CBMH 303B	CBMH 303A	24	0.0040	154.40	942.30	941.68	946.50	4.20	72"DIA	R-3067-VI	
CBMH 303A	MH 303	27	0.0030	92.90	941.68	941.40	946.50	4.82	60"DIA	R-2501-GI	
MH 303	CBMH 302	42	0.0120	54.70	941.40	940.75	948.15	6.75	96"DIA	R-1733	
CB 302A	CBMH 302	12	0.0044	135.70	943.35	942.75	947.35	4.00	2'X3'	R-3067-VI	
CBMH 302	CBMH 301	54	0.0026	284.60	940.75	940.01	947.50	6.75	108"DIA	R-2501-GI	
CBMH 301	FES 300	54	0.0026	67.50	940.01	939.83	953.75	13.74	84"DIA	R-3067-V	
OCS 1	IH 900 (ATOP EXIST	12	0.0071	114.20	934.35	933.54	947.25	12.90	48"DIA	HINGED	
IH 900 (ATOP EXIST	EXIST MH	36	0.0000	77.00	932.70	932.60	947.95	15.25	72"DIA	R-1733	
CB 509	CBMH 508	12	0.0044	21.70	960.70	960.60	964.65	3.95	2'X3'	R-3067-VI	
CBMH 508	CBMH 507	12	0.0044	108.10	960.60	960.13	964.65	4.05	48"DIA	R-3067-V	
CBMH 507	CBMH 506	12	0.0044	50.90	960.13	959.90	965.00	4.87	48"DIA	R-3067-VI	
CBMH 506	CBMH 505	12	0.0120	26.70	959.90	959.58	965.00	5.10	48"DIA	R-3067-V	
CBMH 505	CBMH 501	15	0.0050	69.50	959.58	959.24	964.80	5.22	48"DIA	R-3067-V	
CB 503A	CBMH 503	12	0.0044	119.30	962.00	961.48	966.00	4.00	2'X3'	R-2501-GI	
CB 504	CBMH 503	12	0.0044	101.80	960.30	959.85	965.00	4.70	2'X3'	R-3067-V	
CBMH 503	CBMH 502	12	0.0070	30.50	959.85	959.64	966.25	6.40	48"DIA	R-3067-VI	
CBMH 502	CBMH 501	12	0.0105	68.10	959.64	958.92	965.60	5.96	48"DIA	R-3067-V	

MH/CB FROM	MH/CB TO	P. DIA [IN]	P. SLOPE [FT/FT]	PIPE LENGTH [FT]	FROM INVERT	TO INVERT	RIM ELEV.	BUILD [FT]	STR. TYPE	CAST TYPE	PIPE CLASS
CBMH 501	CBMH 500	15	0.0180	168.10	958.92	955.90	965.65	6.73	60"DIA	R-2501-GI	
CBMH 500	CBMH 310B	18	0.0077	164.10	955.90	954.63	965.20	9.30	48"DIA	R-4342	
CB 710	CBMH 709	12	0.0066	74.40	961.25	960.76	964.90	3.65	2'X3'	R-2501-GI	
CBMH 709	CBMH 708	12	0.0080	10.70	960.76	960.67	964.50	3.74	48"DIA	R-3067-V	
CBMH 708	CBMH 707	15	0.0038	47.00	960.67	960.49	965.10	4.43	48"DIA	R-3067-V	
CBMH 707	MH 704	18	0.0030	140.80	960.49	960.07	966.05	5.56	48"DIA	R-2501-GI	
CB 706A	CBMH 706	12	0.0044	10.70	961.60	961.55	965.60	4.00	2'X3'	R-3067-V	
CBMH 706	CBMH 705	12	0.0080	97.30	961.55	960.77	965.60	4.05	48"DIA	R-3067-V	
CB 705A	CBMH 705	12	0.0050	10.70	961.30	961.25	965.80	4.50	2'X3'	R-3067-V	
CBMH 705	MH 704	18	0.0050	21.10	960.77	960.67	965.00	4.23	48"DIA	R-3067-VI	
MH 704	CBMH 703	24	0.0030	135.10	960.07	959.67	965.30	5.23	72"DIA	R-1733	
CBMH 703	CBMH 702	24	0.0035	95.80	959.67	959.33	964.80	5.13	48"DIA	R-3067-V	
CBMH 702	CBMH 701	24	0.0050	110.50	959.33	958.78	965.00	5.67	48"DIA	R-3067-V	
CB 701A	CBMH 701	12	0.0044	42.80	960.70	960.51	964.25	3.55	2'X3'	R-3067-VI	
CBMH 701	MH 700	24	0.0060	122.00	958.78	958.05	965.15	6.37	60"DIA	R-3067-V	
MH 700	CBMH 311	24	0.0060	35.70	958.05	957.83	966.50	8.45	48"DIA	R-1733	
CB 617A	CBMH 617	12	0.0044	18.40	960.00	959.92	963.65	3.65	2'X3'	R-3067-V	
CBMH 617	CBMH 616	12	0.0044	118.80	959.92	959.40	963.50	3.58	48"DIA	R-3067-V	
CBMH 616	CBMH 607	12	0.0085	209.10	959.40	957.62	963.68	4.28	48"DIA	R-3067-V	
CB 613A	CBMH 613	12	0.0044	125.60	961.66	961.11	965.70	4.04	2'X3'	R-3067-V	
CBMH 613	CBMH 612	15	0.0060	261.00	961.11	959.54	965.40	4.29	48"DIA	R-3067-VI	
CBMH 612	CBMH 611	15	0.0110	98.10	959.54	958.46	963.10	3.56	48"DIA	R-3067-V	
CB 614	CBMH 611	12	0.0070	10.70	959.15	959.08	965.10	5.95	2'X3'	R-3067-V	
CBMH 611	CBMH 610	18	0.0070	99.00	958.46	957.77	963.00	4.54	48"DIA	R-3067-VI	
CB 610A	CBMH 610	12	0.0044	10.70	959.50	959.45	965.10	5.60	2'X3'	R-3067-V	
CBMH 610	CBMH 609	21	0.0050	114.10	957.77	957.20	963.00	5.23	48"DIA	R-3067-VI	
CBMH 609	CBMH 608	21	0.0060	67.60	957.20	956.79	963.20	6.00	48"DIA	R-3067-V	
CBMH 608	CBMH 607	24	0.0044	126.70	956.79	956.24	963.30	6.51	60"DIA	R-3067-V	
CBMH 607	CBMH 606	24	0.0060	118.30	956.24	955.53	963.10	6.86	96"DIA	R-3067-VI	
CBMH 606	CBMH 605	24	0.0075	108.00	955.53	954.72	963.10	7.57	48"DIA	R-3067-VI	
CBMH 605	CBMH 604	27	0.0044	97.60	954.72	954.29	962.30	7.58	60"DIA	R-3067-V	
CBMH 604	CBMH 603A	27	0.0045	144.40	954.29	953.64	963.80	9.51	48"DIA	R-2501-GI	
CBMH 603A	CBMH 603	27	0.0050	56.80	953.64	953.35	963.33	9.69	84"DIA	R-3067-V	
CBMH 603	CBMH 602	27	0.0053	66.30	953.35	953.00	958.60	5.25	96"DIA	R-3067-V	
CBMH 602	CBMH 601	27	0.0055	128.90	953.00	952.29	958.25	5.25	48"DIA	R-2501-GI	
CBMH 601	CBMH 600A	27	0.0062	24.10	952.29	952.14	957.40	5.11	72"DIA	R-3067-V	
NYLO-1	CBMH 600A	12	0.0120	8.50	955.60	955.50	958.40	2.80	12" LIN	R-3067-V	
CBMH 600A	FES 600	21	0.0330	43.30	926.50	925.07	958.00	31.50	48"DIA	R-3067-V	
OCS 2	FES 2	12	0.0025	46.90	918.50	918.38	929.00	10.50	48"DIA	HINGED	
FES 201	FES 200	12	0.0417	24.00	906.50	905.50					5

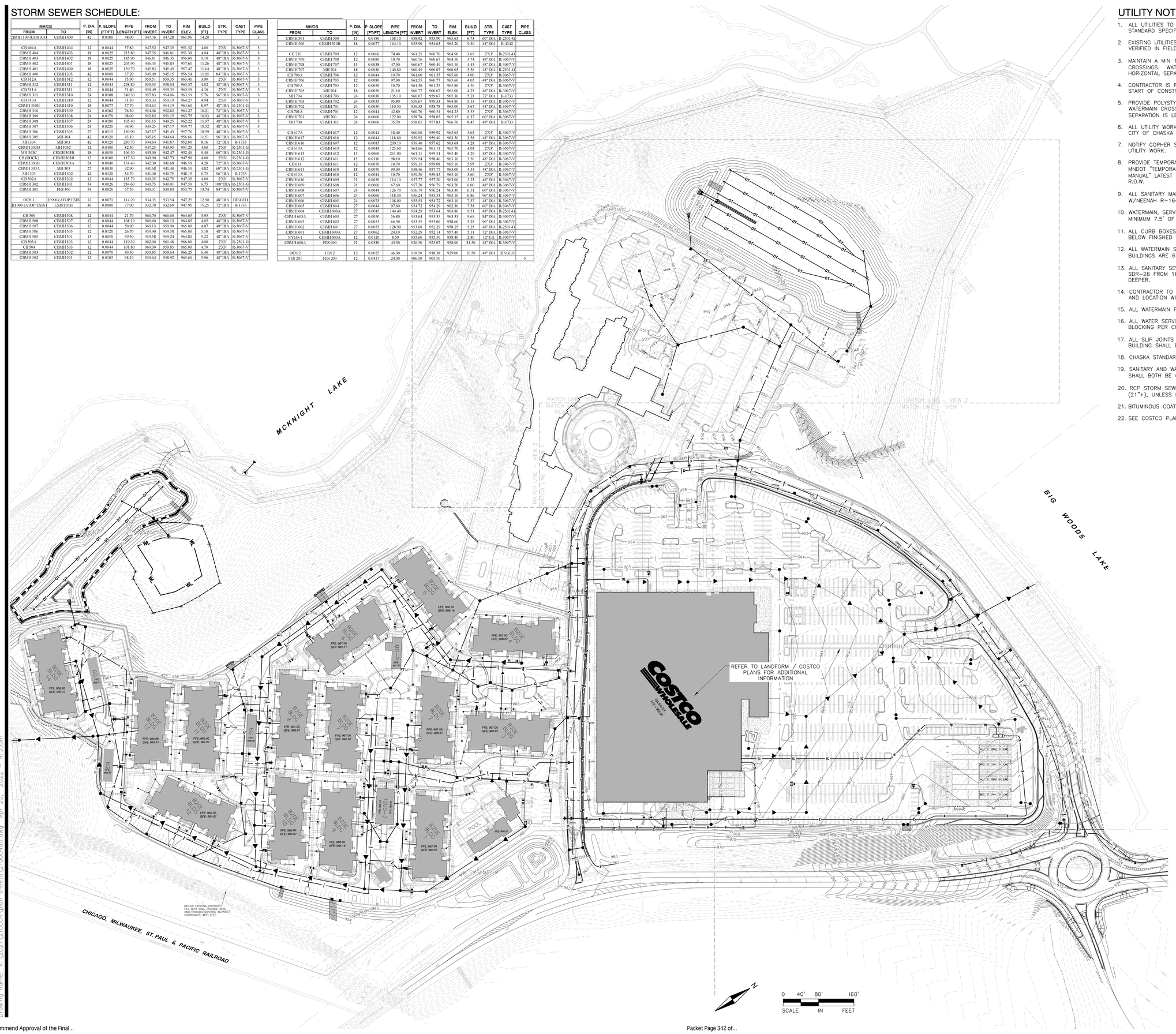

UTILITY NOTES:

1. ALL UTILITIES TO BE INSTALLED PER CITY OF CHASKA 2019 STANDARD SPECIFICATIONS FOR UTILITY AND STREET CONSTRUCTION.
2. EXISTING UTILITIES, SERVICE LOCATIONS AND ELEVATIONS SHALL BE VERIFIED IN FIELD PRIOR TO CONSTRUCTION.
3. MAINTAIN A MIN 18" VERTICAL SEPARATION AT ALL PIPE CROSSINGS. WATER AND SANITARY SEWER LINES TO MAINTAIN 10' HORIZONTAL SEPARATION. LOWER WATERMAIN AS NECESSARY.
4. CONTRACTOR IS RESPONSIBLE FOR ALL PERMITS PRIOR TO THE START OF CONSTRUCTION.
5. PROVIDE POLYSTYRENE INSULATION FOR ALL STORM SEWER AND WATERMAIN CROSSINGS WHERE VERTICAL OR HORIZONTAL SEPARATION IS LESS THAN 3'.
6. ALL UTILITY WORK WITHIN THE R.O.W. SHALL COMPLY WITH THE CITY OF CHASKA ENGINEERING GUIDELINES.
7. NOTIFY GOPHER STATE ONE CALL 48 HOURS IN ADVANCE OF ANY UTILITY WORK.
8. PROVIDE TEMPORARY TRAFFIC CONTROL IN COMPLIANCE WITH MNDOT "TEMPORARY TRAFFIC CONTROL ZONE LAYOUTS–FIELD MANUAL" LATEST REVISION, FOR ANY CONSTRUCTION WITHIN PUBLIC R.O.W.
9. ALL SANITARY MANHOLES TO BE 48" DIAMETER CONCRETE W/NEENAH R–1642 CASTING, UNLESS NOTED OTHERWISE.
10. WATERMAIN, SERVICES, AND VALVES SHALL BE INSTALLED WITH MINIMUM 7.5' OF COVER.
11. ALL CURB BOXES SHALL BE ADJUSTED TO AN ELEVATION OF 1" BELOW FINISHED GRADE.
12. ALL WATERMAIN SHALL BE C900 PVC. WATER SERVICES INTO BUILDINGS ARE 6" SERVICES.
13. ALL SANITARY SEWER TO BE 8" PVC SDR–35 FROM 0–16 FEET, SDR–26 FROM 16–22 FEET, AND C900 PVC FOR 22+ FEET AND DEEPER.
14. CONTRACTOR TO VERIFY EXACT SERVICE CONNECTION SIZE, INVERT, AND LOCATION WITH FINAL BUILDING PLANS.
15. ALL WATERMAIN FITTINGS SHALL BE EPOXY COATED.
16. ALL WATER SERVICE LINES SHALL BE DOUBLE 45° ANGLES WITH BLOCKING PER CHASKA STANDARD DETAILS.
17. ALL SLIP JOINTS ON WATER SERVICES WITHIN 60' OF SERVICE BUILDING SHALL BE SHORT RODDED.
18. CHASKA STANDARDS TO NOT ALLOW WET TAPS.
19. SANITARY AND WATER SERVICES TO EACH MULTIFAMILY BUILDING SHALL BOTH BE 6", UNLESS NOTED OTHERWISE.
20. RCP STORM SEWER SHALL BE CLASS 5 (12–18") AND CLASS 3 (21"+), UNLESS NOTED OTHERWISE.
21. BITUMINOUS COAT SANITARY MANHOLES. SEE CITY DETAIL SAN–1.
22. SEE COSTCO PLANS FOR SMALL UTILITY SERVICE SIZES TO COSTCO.

LEGEND

- PROPOSED STORM SEWER
- PROPOSED SANITARY SEWER
- PROPOSED WATERMAIN
- PIPE INSULATION
- PROPOSED CATCH BASIN
- PROPOSED SANITARY/STORM MANHOLE
- PROPOSED GATE VALVE
- PROPOSED HYDRANT
- PROPOSED RIP RAP
- POST INDICATOR VALVE
- WALL MOUNTED POST INDICATOR VALVE
- EXISTING STORM SEWER
- EXISTING SANITARY SEWER
- EXISTING WATERMAIN
- EXISTING SANITARY MANHOLE
- EXISTING STORM MANHOLE/CATCH BASIN
- EXISTING HYDRANT
- G — PROPOSED GAS
- TC — PROPOSED TELECOMM
- E — PROPOSED ELECTRIC SERVICE

ALLIANT
733 Marquette Avenue
Suite 700
Minneapolis, MN 55402
612.758.3080
www.alliant-inc.com

OAK RIDGE COMMONS
PLANNED UNIT DEVELOPMENT SUBMITTAL
HWY 41 & PEAVEY ROAD
CHASKA, MN

OVERALL UTILITY PLAN

I hereby certify that this plan, specification, or report was prepared by me or under my direct supervision and that I am a duly Licensed PROFESSIONAL ENGINEER under the laws of the State of MINNESOTA

CLARK WICKLUND, PE

4–25–22 — Date — 40922 — License No.

QUALITY ASSURANCE/CONTROL

DATE	ISSUE	BY
9–7–21	PUD RESUBMITTAL	
9–30–21	PROGRESS	
10–11–21	PUD RESUBMITTAL	
10–22–21	CITY COMMENTS	
10–26–21	CITY COMMENTS	
11–17–21	CCWMO RESUBMITTAL	
11–17–21	BID SET	
1–10–22	SIGNAGE UPDATE	
2–1–22	PUD RESUBMITTAL	
3–15–22	LANDSCAPE PLAN UPDATE	
3–28–22	CONSTRUCTION DOCUMENTS	
4–25–22	CITY & COUNTY COMMENTS	

PROJECT TEAM DATA

DESIGNED: MK
DRAWN: MLS
PROJECT NO: 221–0004

C-6.0

Drawing name: X:\2021\210004\plan sheets\210004ut1.dwg Apr 25, 2022 – 4:33pm

MATCH LINE – VIEW 1

MATCH LINE – VIEW 2

MATCH LINE – VIEW 2

MATCH LINE – VIEW 1

LEGEND

- PROPOSED STORM SEWER
- PROPOSED SANITARY SEWER
- PROPOSED WATERMAIN
- PIPE INSULATION
- PROPOSED CATCH BASIN
- PROPOSED SANITARY/STORM MANHOLE
- PROPOSED GATE VALVE
- PROPOSED HYDRANT
- PROPOSED RIP RAP
- POST INDICATOR VALVE
- WALL MOUNTED POST INDICATOR VALVE
- EXISTING STORM SEWER
- EXISTING SANITARY SEWER
- EXISTING WATERMAIN
- EXISTING SANITARY MANHOLE
- EXISTING STORM MANHOLE/CATCH BASIN
- EXISTING HYDRANT
- PROPOSED GAS
- PROPOSED TELECOMM
- PROPOSED ELECTRIC SERVICE

N

0 20' 40' 80'

SCALE IN FEET

BIG WOODS LAKE

OAK RIDGE DRIVE

COSTCO WHOLESALE
164,545 S.F.
FFE = 966.00

REFER TO LANDFORM / COSTCO PLANS FOR ADDITIONAL INFORMATION

230.7' of 42" HDPE @ 1.20%
CONNECT TO EXISTING WATERMAIN
MH 304 RIM=952.80 INV(SE)=944.64 INV OUT=944.64
150.9' of 27" RCP @ 1.15%
320 SF TURF REINFORCEMENT MAT EOF ELEV=956.66
43.1' of 42" HDPE @ 1.20%
94.9' of 24" RCP @ 2.20%
CBMH 306 RIM=957.76 INV(SW)=947.17 INV OUT=947.17
CBMH 307 RIM=959.77 INV(S)=949.25 INV OUT=949.25
CBMH 305 RIM=956.66 INV(SW)=945.43 INV(SE)=945.15 INV OUT=945.15
105.4' of 24" RCP @ 1.80%
37.2' of 42" RCP @ 0.89%
139.7' of 18" RCP @ 0.25%
CBMH 401 RIM=957.47 INV(E)=945.83 INV OUT=945.83
CBMH 308 RIM=962.22 EX INV(SW)=958.00 (VERIFY) INV(S)=951.15 INV OUT=951.15
(2) 12" G.V.
48.0' of 42" RCP @ 1.00%
205.9' of 18" RCP @ 0.25%
12" C900 PVC WATERMAIN
CBMH 400 RIM=956.54 INV(SE)=947.28 INV(NE)=945.49 INV OUT=945.49
CBMH 402 RIM=957.61 INV(E)=946.35 INV OUT=946.35
CBMH 100 (BY OTHERS) RIM=961.71 INV(SW)=954.19 INV(SE)=948.18 INV(NE)=947.96 INV OUT=947.76
185.9' of 18" RCP @ 0.25%
98.0' of 24" RCP @ 1.70%
CBMH 309 RIM=963.75 INV(SE)=952.82 INV OUT=952.82
CBMH 403 RIM=956.00 INV(E)=946.81 INV OUT=946.81
76.3' of 24" RCP @ 1.62%
CBMH 310 RIM=964.27 INV(S)=954.19 INV(SE)=954.06 INV(NE)=959.19 INV OUT=954.06
12" G.V.
31.3' of 12" RCP @ 0.44%
SAN MH-100 (EXT. DROP) RIM=926.00 INV(S)=917.00 INV OUT=905.00
CB 310A RIM=964.27 INV OUT=959.33
57.7' of 18" HDPE @ 0.77%
164.1' of 18" HDPE @ 0.77%
HYDRANT W/ 6" G.V. & 6"X12" TEE
SAN MH-101 (EXT. DROP) RIM=955.50 INV(SW)=939.90 INV OUT=930.00
SAN MH-67 (BY OTHERS) RIM=960.97 INV(S)=940.85 INV(E)=944.75 INV(W)=940.85 INV OUT=940.75
CORE DRILL AND CONNECT TO EXISTING SANITARY MANHOLE INV=904.00 INV OUT(EX)=902.85 (VERIFY)
CBMH 404 RIM=951.39 INV(N)=947.35 INV OUT=947.35
349.3' of 24" RCP @ 1.08%
6" SAN SERVICE INV=957.50
SANITARY STUB INV=940.33
215.8' of 18" RCP @ 0.25%
CB 404A RIM=951.52 INV=947.52
SAN MH-9 RIM=965.80 INV(NW)=957.00 INV OUT=956.00
6"X8" TEE W/ 6" G.V.
37.8' of 12" RCP @ 0.44%
8" C900 PVC WATERMAIN
CB 509 RIM=964.65 INV OUT=960.70
8"X12" TEE W/ 8" G.V.
21.7' of 12" HDPE @ 0.44%
CBMH 508 RIM=964.65 INV(NW)=960.60 INV OUT=960.60
31.4' of 12" RCP @ 0.44%
CB 311A RIM=963.59 INV OUT=959.49
108.1' of 12" HDPE @ 0.44%
CBMH 507 M=965.00 V(NE)=960.13 V OUT=960.13
CBMH 311 RIM=963.59 INV(NE)=959.35 INV(SE)=958.04 INV(S)=957.83 INV OUT=957.83
9' of 12" DPE @ 0.44%
35.7' of 24" HDPE @ 0.60%
MH 700 RIM=966.50 (SE)=958.05 OUT=958.05
of 24" @ 0.60%
298.8' of 12" RCP @ 0.44%
12" C900 PVC WATERMAIN
8"X12" TEE W/ 8" G.V.
110.5' of 24" HDPE @ 0.50%
CBMH 701 RIM=965.15 INV(SW)=958.78 INV(SE)=960.51 INV OUT=958.78
2.8' of 12" @ 0.44%
CB 701A RIM=964.25 INV OUT=960.70
SAN MH-14 RIM=965.50 INV(W)=954.00 INV OUT=953.62
CBMH 312 RIM=963.37 INV(NE)=959.35 INV OUT=959.35
CB 312A RIM=963.41 INV OUT=959.51963
35.9' of 12" RCP @ 0.44%
12"X12" TEE
260 SF TURF REINFORCEMENT MAT EOF ELEV=959.64
CONNECT TO EXISTING W/ 11.25° BEND & 12" G.V.
12" C900 WATERMAIN
22.5° BEND
11.25° BEND
CONNECT TO EXISTING W/ 45° BEND & 12" G.V.
12" C900 PVC WATERMAIN
12" G.V.
HYDRANT W/ 6" G.V. & 6"X12" TEE
45° BEND
45° BEND
12"X12" TEE

ALLIANT
733 Marquette Avenue
Suite 700
Minneapolis, MN 55402
612.758.3080
www.alliant-inc.com

OAK RIDGE COMMONS
PLANNED UNIT DEVELOPMENT SUBMITTAL
HWY 41 & PEAVEY ROAD
CHASKA, MN

UTILITY PLAN - VIEW 1

I hereby certify that this plan, specification, or report was prepared by me or under my direct supervision and that I am a duly Licensed PROFESSIONAL ENGINEER under the laws of the State of MINNESOTA

CLARK WICKLUND, PE

4-25-22 Date — 40922 License No.

QUALITY ASSURANCE/CONTROL

BY	DATE

DATE	ISSUE
9-7-21	PUD RESUBMITTAL
9-30-21	PROGRESS
10-11-21	PUD RESUBMITTAL
10-22-21	CITY COMMENTS
10-26-21	CITY COMMENTS
11-17-21	CCWMO RESUBMITTAL
11-17-21	BID SET
1-10-22	SIGNAGE UPDATE
2-1-22	PUD RESUBMITTAL
3-15-22	LANDSCAPE PLAN UPDATE
3-28-22	CONSTRUCTION DOCUMENTS
4-25-22	CITY & COUNTY COMMENTS

PROJECT TEAM DATA

DESIGNED:	MK
DRAWN:	MLS
PROJECT NO:	221-0004

C-6.1

Drawing name: X:\2021\210004\plan sheets\210004utl.dwg Apr 25, 2022 - 4:35pm



LEGEND

- PROPOSED STORM SEWER
- PROPOSED SANITARY SEWER
- PROPOSED WATERMAIN
- PIPE INSULATION
- PROPOSED CATCH BASIN
- PROPOSED SANITARY/STORM MANHOLE
- PROPOSED GATE VALVE
- PROPOSED HYDRANT
- PROPOSED RIP RAP
- POST INDICATOR VALVE
- WALL MOUNTED POST INDICATOR VALVE
- EXISTING STORM SEWER
- EXISTING SANITARY SEWER
- EXISTING WATERMAIN
- EXISTING SANITARY MANHOLE
- EXISTING STORM MANHOLE/CATCH BASIN
- EXISTING HYDRANT
- G — PROPOSED GAS
- TC — PROPOSED TELECOMM
- E — PROPOSED ELECTRIC SERVICE

0 20' 40' 80'
SCALE IN FEET

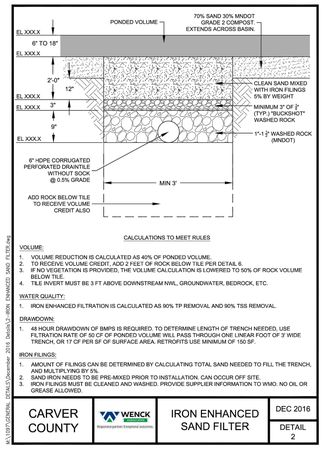

CALCULATIONS TO MEET RULES

VOLUME:
1. VOLUME REDUCTION IS CALCULATED AS 40% OF PONDED VOLUME.
2. TO RECEIVE VOLUME CREDIT, ADD 2 FEET OF ROCK BELOW TILE PER DETAIL 6.
3. IF NO VEGETATION IS PROVIDED, THE VOLUME CALCULATION IS LOWERED TO 50% OF ROCK VOLUME BELOW TILE.
4. TILE INVERT MUST BE 3 FT ABOVE DOWNSTREAM NWL, GROUNDWATER, BEDROCK, ETC.

WATER QUALITY:
1. IRON ENHANCED FILTRATION IS CALCULATED AS 90% TP REMOVAL AND 90% TSS REMOVAL.

DRAWDOWN:
1. 48 HOUR DRAWDOWN OF BMPS IS REQUIRED. TO DETERMINE LENGTH OF TRENCH NEEDED, USE FILTRATION RATE OF 50 CF OF PONDED VOLUME WILL PASS THROUGH ONE LINEAR FOOT OF 3' WIDE TRENCH, OR 17 CF PER SF OF SURFACE AREA. RETROFITS USE MINIMUM OF 150 SF.

IRON FILINGS:
1. AMOUNT OF FILINGS CAN BE DETERMINED BY CALCULATING TOTAL SAND NEEDED TO FILL THE TRENCH, AND MULTIPLYING BY 5%.
2. SAND IRON NEEDS TO BE PRE-MIXED PRIOR TO INSTALLATION. CAN OCCUR OFF SITE.
3. IRON FILINGS MUST BE CLEANED AND WASHED. PROVIDE SUPPLIER INFORMATION TO WMO. NO OIL OR GREASE ALLOWED.

CARVER COUNTY	WENCK	IRON ENHANCED SAND FILTER	DEC 2016
			DETAIL 2

ALLIANT
733 Marquette Avenue
Suite 700
Minneapolis, MN 55402
612.758.3080
www.alliant-inc.com

OAK RIDGE COMMONS
PLANNED UNIT DEVELOPMENT SUBMITTAL
HWY 41 & PEAVEY ROAD
CHASKA, MN

UTILITY PLAN - VIEW 2

I hereby certify that this plan, specification, or report was prepared by me or under my direct supervision and that I am a duly Licensed PROFESSIONAL ENGINEER under the laws of the State of MINNESOTA

CLARK WICKLUND, PE
4-25-22 — Date
40922 — License No.

QUALITY ASSURANCE/CONTROL

BY	DATE
DATE	**ISSUE**
9-7-21	PUD RESUBMITTAL
9-30-21	PROGRESS
10-11-21	PUD RESUBMITTAL
10-22-21	CITY COMMENTS
10-26-21	CITY COMMENTS
11-17-21	CCWMO RESUBMITTAL
11-17-21	BID SET
1-10-22	SIGNAGE UPDATE
2-1-22	PUD RESUBMITTAL
3-15-22	LANDSCAPE PLAN UPDATE
3-28-22	CONSTRUCTION DOCUMENTS
4-25-22	CITY & COUNTY COMMENTS

PROJECT TEAM DATA
DESIGNED: MK
DRAWN: MLS
PROJECT NO: 221-0004

C-6.2

Drawing name: X:\2021\210004\plan sheets\210004util.dwg Apr 25, 2022 - 4:37pm



ALLIANT
733 Marquette Avenue
Suite 700
Minneapolis, MN 55402
612.758.3080
www.alliant-inc.com

OAK RIDGE COMMONS
PLANNED UNIT DEVELOPMENT SUBMITTAL
HWY 41 & PEAVEY ROAD
CHASKA, MN

UTILITY PLAN - VIEW 3

I hereby certify that this plan, specification, or report was prepared by me or under my direct supervision and that I am a duly Licensed PROFESSIONAL ENGINEER under the laws of the State of MINNESOTA

CLARK WICKLUND, PE

4-25-22 — Date
40922 — License No.

QUALITY ASSURANCE/CONTROL

BY	DATE

DATE	ISSUE
9-7-21	PUD RESUBMITTAL
9-30-21	PROGRESS
10-11-21	PUD RESUBMITTAL
10-22-21	CITY COMMENTS
10-26-21	CITY COMMENTS
11-17-21	CCWMO RESUBMITTAL
11-17-21	BID SET
1-10-22	SIGNAGE UPDATE
2-1-22	PUD RESUBMITTAL
3-15-22	LANDSCAPE PLAN UPDATE
3-28-22	CONSTRUCTION DOCUMENTS
4-25-22	CITY & COUNTY COMMENTS

PROJECT TEAM DATA

DESIGNED: MK
DRAWN: MLS
PROJECT NO: 221-0004

C-6.3

Drawing name: X:\2021\210004\plan sheets\210004utl.dwg Apr 25, 2022 - 4:39pm



OAK RIDGE DRIVE

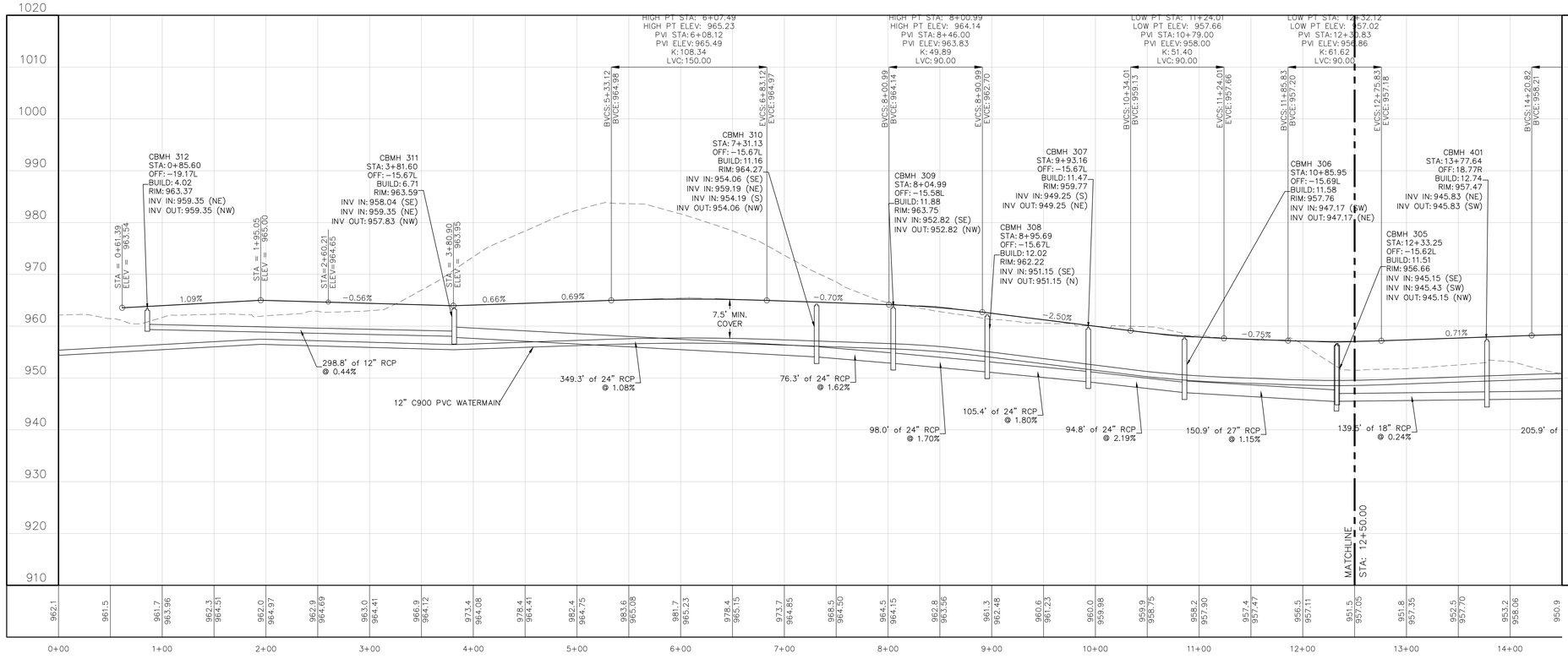

CBMH 400-CBMH 305

ALLIANT
733 Marquette Avenue
Suite 700
Minneapolis, MN 55402
612.758.3080
www.alliant-inc.com

OAK RIDGE COMMONS
PLANNED UNIT DEVELOPMENT SUBMITTAL
HWY 41 & PEAVEY ROAD
CHASKA, MN

UTILITY PLAN & PROFILE - OAK RIDGE DRIVE - VIEW 1

I hereby certify that this plan, specification, or report was prepared by me or under my direct supervision and that I am a duly Licensed PROFESSIONAL ENGINEER under the laws of the State of MINNESOTA

CLARK WICKLUND, PE

4-25-22 — 40922
Date — License No.

QUALITY ASSURANCE/CONTROL

BY	DATE

DATE	ISSUE
9-7-21	PUD RESUBMITTAL
9-30-21	PROGRESS
10-11-21	PUD RESUBMITTAL
10-22-21	CITY COMMENTS
10-26-21	CITY COMMENTS
11-17-21	COMMO RESUBMITTAL
11-17-21	BID SET
1-10-22	SIGNAGE UPDATE
2-1-22	PUD RESUBMITTAL
3-15-22	LANDSCAPE PLAN UPDATE
3-28-22	CONSTRUCTION DOCUMENTS
4-25-22	CITY & COUNTY COMMENTS

PROJECT TEAM DATA
DESIGNED: MK
DRAWN: ST
PROJECT NO: 221-0004

C-6.4

Drawing name: X:\2021\210004\plan sheets\210004utl-prof.dwg Apr 25, 2022 - 4:51pm

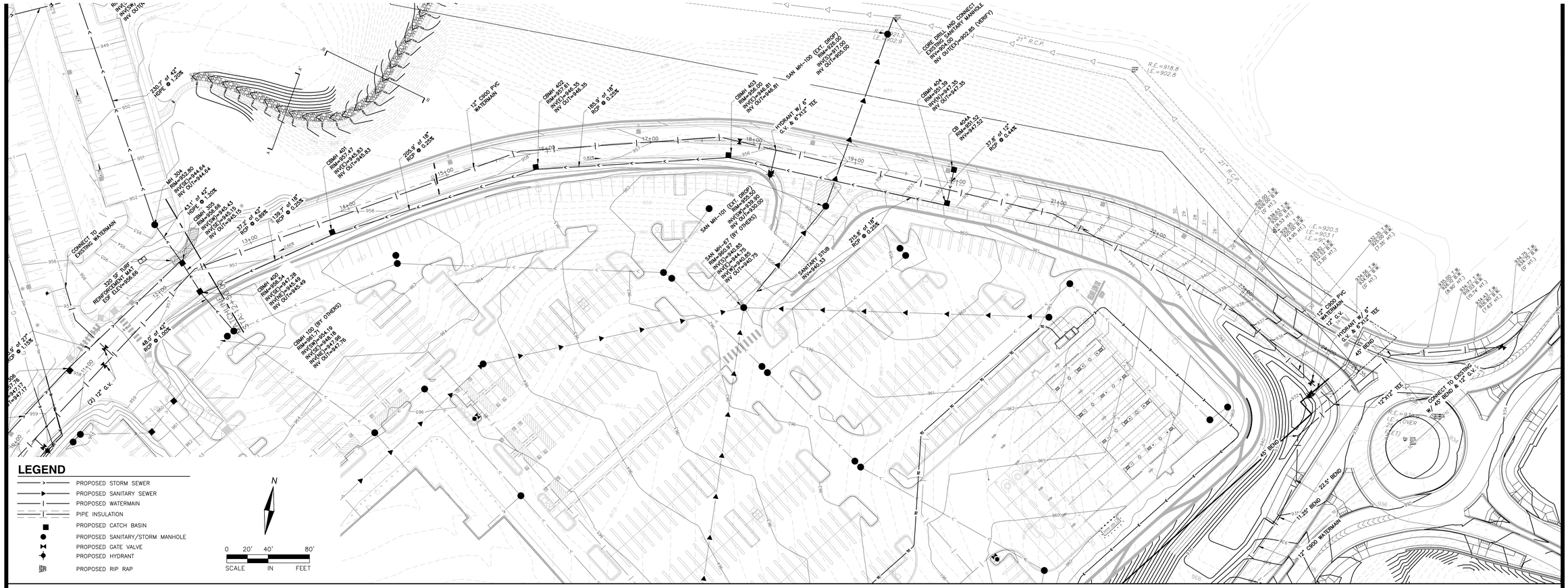

OAK RIDGE DRIVE

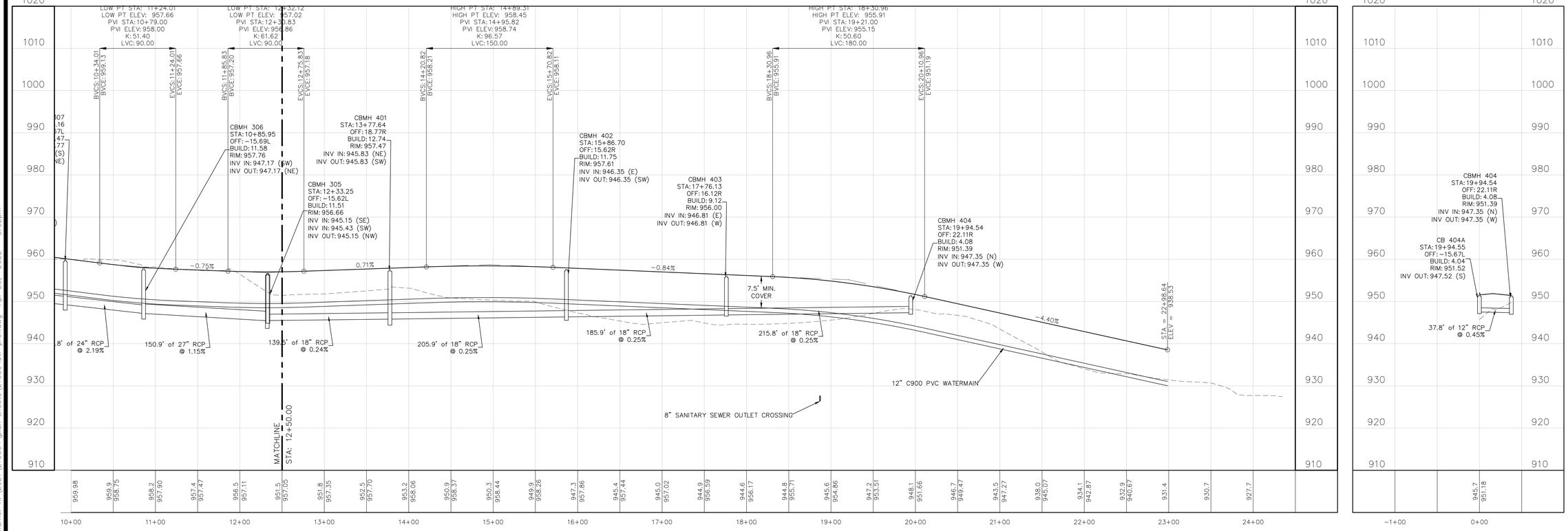

CB 404A-CBMH 404

ALLIANT
733 Marquette Avenue
Suite 700
Minneapolis, MN 55402
612.758.3080
www.alliant-inc.com

OAK RIDGE COMMONS
PLANNED UNIT DEVELOPMENT SUBMITTAL
HWY 41 & PEAVEY ROAD
CHASKA, MN

UTILITY PLAN & PROFILE - OAK RIDGE DRIVE - VIEW 2

I hereby certify that this plan, specification, or report was prepared by me or under my direct supervision and that I am a duly Licensed PROFESSIONAL ENGINEER under the laws of the State of MINNESOTA

CLARK WICKLUND, PE

4-25-22 — Date
40922 — License No.

QUALITY ASSURANCE/CONTROL

BY	DATE

DATE	ISSUE
9-7-21	PUD RESUBMITTAL
9-30-21	PROGRESS
10-11-21	PUD RESUBMITTAL
10-22-21	CITY COMMENTS
10-26-21	CITY COMMENTS
11-17-21	CCWMO RESUBMITTAL
11-17-21	BID SET
1-10-22	SIGNAGE UPDATE
2-1-22	PUD RESUBMITTAL
3-15-22	LANDSCAPE PLAN UPDATE
3-28-22	CONSTRUCTION DOCUMENTS
4-25-22	CITY & COUNTY COMMENTS

PROJECT TEAM DATA

DESIGNED:	MK
DRAWN:	ST
PROJECT NO:	221-0004

C-6.5

Drawing name: X:\2021\210004\plan sheets\210004utl-prof.dwg Apr 25, 2022 - 5:02pm

LEGEND

- PROPOSED STORM SEWER
- PROPOSED SANITARY SEWER
- PROPOSED WATERMAIN
- PROPOSED CATCH BASIN
- PROPOSED SANITARY/STORM MANHOLE
- PROPOSED GATE VALVE
- PROPOSED HYDRANT
- PROPOSED RIP RAP
- POST INDICATOR VALVE
- EXISTING STORM SEWER
- EXISTING SANITARY SEWER
- EXISTING WATERMAIN
- EXISTING SANITARY MANHOLE
- EXISTING STORM MANHOLE/CATCH BASIN
- EXISTING HYDRANT
- DECIDUOUS OVERSTORY TREES
- CONIFEROUS TREES
- ORNAMENTAL TREES
- SHRUBS
- PERENNIALS
- SOD LIMITS
- POLY EDGING
- LANDSCAPING LIMITS

MATCH LINE – VIEW 2

MATCH LINE – VIEW 1

MATCH LINE – VIEW 2

MATCH LINE – VIEW 1

OAK RIDGE DRIVE

REFER TO LANDFORM / COSTCO PLANS FOR ADDITIONAL INFORMATION

B20E BLDG 5
FFE: 968.50
GFE: 968.16

B20E BLDG 4
FFE: 967.00
GFE: 966.67

BIG W

0 20' 40' 80'
SCALE IN FEET

ALLIANT
733 Marquette Avenue
Suite 700
Minneapolis, MN 55402
612.758.3080
www.alliant-inc.com

OAK RIDGE COMMONS
PLANNED UNIT DEVELOPMENT SUBMITTAL
HWY 41 & PEAVEY ROAD
CHASKA, MN

LANDSCAPE OVERLAY PLAN VIEW 2

I hereby certify that this plan, specification, or report was prepared by me or under my direct supervision and that I am a duly Licensed PROFESSIONAL ENGINEER under the laws of the State of MINNESOTA

CLARK WICKLUND, PE
4-25-22 — Date
40922 — License No.

QUALITY ASSURANCE/CONTROL

BY	DATE

DATE	ISSUE
9-7-21	PUD RESUBMITTAL
9-30-21	PROGRESS
10-11-21	PUD RESUBMITTAL
10-22-21	CITY COMMENTS
10-26-21	CITY COMMENTS
11-17-21	CCWMO RESUBMITTAL
11-17-21	BID SET
1-10-22	SIGNAGE UPDATE
2-1-22	PUD RESUBMITTAL
3-15-22	LANDSCAPE PLAN UPDATE
3-28-22	CONSTRUCTION DOCUMENTS
4-25-22	CITY & COUNTY COMMENTS

PROJECT TEAM DATA

DESIGNED:	MK
DRAWN:	MLS
PROJECT NO:	221-0004

C-6.6

Drawing name: X:\2021\210004\plan sheets\210004landscape overlay plan.dwg Apr 25, 2022 - 5:05pm

LEGEND

- PROPOSED STORM SEWER
- PROPOSED SANITARY SEWER
- PROPOSED WATERMAIN
- PROPOSED CATCH BASIN
- PROPOSED SANITARY/STORM MANHOLE
- PROPOSED GATE VALVE
- PROPOSED HYDRANT
- PROPOSED RIP RAP
- POST INDICATOR VALVE
- EXISTING STORM SEWER
- EXISTING SANITARY SEWER
- EXISTING WATERMAIN
- EXISTING SANITARY MANHOLE
- EXISTING STORM MANHOLE/CATCH BASIN
- EXISTING HYDRANT
- DECIDUOUS OVERSTORY TREES
- CONIFEROUS TREES
- ORNAMENTAL TREES
- SHRUBS
- PERENNIALS
- SOD LIMITS
- POLY EDGING
- LANDSCAPING LIMITS

N

0 25' 50' 100'
SCALE IN FEET

MCKNIGHT LAKE

MATCH LINE – VIEW 3

MATCH LINE – VIEW 2

MATCH LINE – VIEW 1

POND

CHICAGO, MILWAUKEE, ST. PAUL & PACIFIC RAILROAD

B20E BLDG 14 — FFE: 959.80 GFE: 959.47
6G — FFE: 959.47
B20E BLDG 13 — FFE: 964.80 GFE: 964.47
B20E BLDG 11 — FFE: 965.00 GFE: 964.67
6G — FFE: 963.80
6G — FFE: 966.00
B20E BLDG 12 — FFE: 965.00 GFE: 964.67
B20E BLDG 10 — FFE: 966.00 GFE: 965.67
B20E BLDG 8 — FFE: 967.00 GFE: 966.67
B20E BLDG 9 — FFE: 966.50 GFE: 966.16
B20E BLDG 7 — FFE: 967.00 GFE: 966.67
B20E BLDG 6 — FFE: 967.50 GFE: 967.17
MG-P — FFE: 967.50
12GS-2 — FFE: 966.16 / FFE: 966.50
B20E BLDG 5 — FFE: 968.50 GFE: 968.16
B20E BLDG 2 — FFE: 967.00 GFE: 966.67
B20E BLDG 4 — FFE: 967.00 GFE: 966.67
B20E BLDG 3 — FFE: 967.00 GFE: 966.67
B20E BLDG 1 — FFE: 967.00 GFE: 966.67
POOL — FFE: 966.50
COSTCO WHOLESALE — 156,545 S.F. FFE = 966.00

ALLIANT
733 Marquette Avenue
Suite 700
Minneapolis, MN 55402
612.758.3080
www.alliant-inc.com

OAK RIDGE COMMONS
PLANNED UNIT DEVELOPMENT SUBMITTAL
HWY 41 & PEAVEY ROAD
CHASKA, MN

LANDSCAPE PLAN OVERLAY PLAN VIEW 3

I hereby certify that this plan, specification, or report was prepared by me or under my direct supervision and that I am a duly Licensed PROFESSIONAL ENGINEER under the laws of the State of MINNESOTA

CLARK WICKLUND, PE

4-25-22 — Date
40922 — License No.

QUALITY ASSURANCE/CONTROL

BY	DATE

DATE	ISSUE
9-7-21	PUD RESUBMITTAL
9-30-21	PROGRESS
10-11-21	PUD RESUBMITTAL
10-22-21	CITY COMMENTS
10-26-21	CITY COMMENTS
11-17-21	CCWMO RESUBMITTAL
11-17-21	BID SET
1-10-22	SIGNAGE UPDATE
2-1-22	PUD RESUBMITTAL
3-15-22	LANDSCAPE PLAN UPDATE
3-28-22	CONSTRUCTION DOCUMENTS
4-25-22	CITY & COUNTY COMMENTS

PROJECT TEAM DATA

DESIGNED:	MK
DRAWN:	MLS
PROJECT NO:	221-0004

C-6.7

Drawing name: X:\2021\210004\plan sheets\210004landscape overlay plan.dwg Apr 25, 2022 - 5:09pm

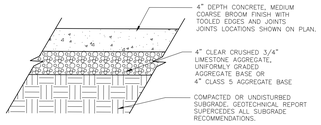

1 CONCRETE SIDEWALK
NO SCALE

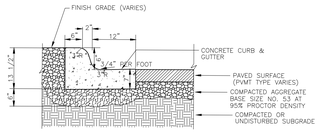

2 B612 CURB AND GUTTER
NO SCALE

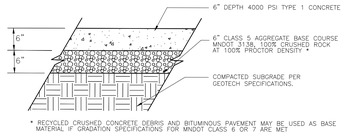

5 HEAVY DUTY CONCRETE PAVEMENT
(AUTOMOBILE PARKING)
NO SCALE

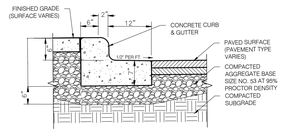

6 B612 CONCRETE OUTFALL CURB AND GUTTER
NO SCALE

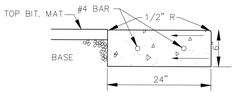

7 RIBBON CURB
NO SCALE

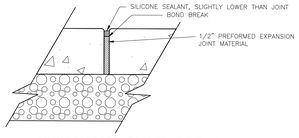

8 EXPANSION JOINT DETAIL
NO SCALE

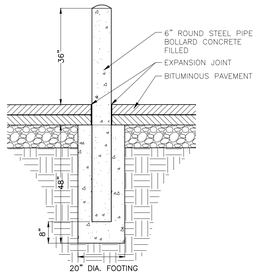

9 STEEL TUBE CONCRETE BOLLARD
NO SCALE

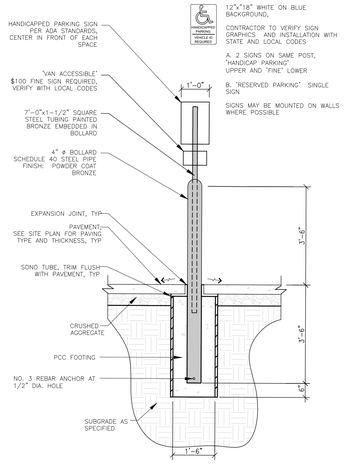

10 TYPE 6B HC BOLLARD
NO SCALE

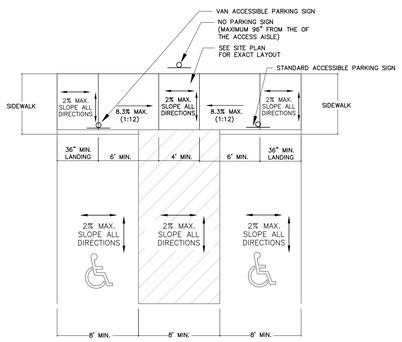

NOTE:
DETECTABLE WARNING SURFACE (TRUNCATED DOMES) ARE NOT TO BE INSTALLED AT THE ACCESSIBLE CURB RAMPS AND ARE NOT REQUIRED ON PRIVATE DEVELOPMENTS, PER 2010 ADA STANDARDS FOR ACCESSIBLE DESIGN.

NOTE:
1:6 VAN ACCESSIBLE SPACES ARE REQUIRED.
NOTE: ADHERE TO MNDOT "PARALLEL" PEDESTRIAN CURB RAMP DETAIL

11 ACCESSIBLE PARKING STALLS
NO SCALE

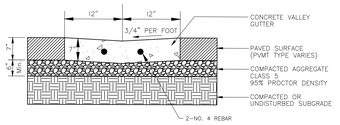

12 CONCRETE VALLEY GUTTER
NO SCALE

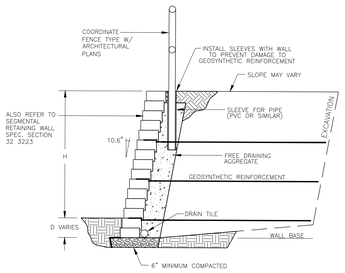

13 CONCRETE MODULAR BLOCK RETAINING WALL
NO SCALE

REFER TO STRUCTURAL ENGINEER'S DRAWINGS AND SPECIFICATIONS TAKE PRECEDENT OVER THIS DETAIL

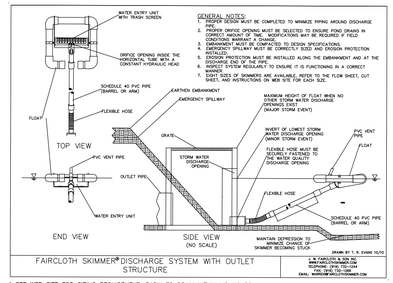

* SEE WEB SITE FOR SIZING REQUIREMENT, BASIN TO DRAIN WITHIN 48 HOURS.

14 FAIRCLOTH SKIMMER DETAIL
[INTERIM GRADING CONDITIONS]
NO SCALE

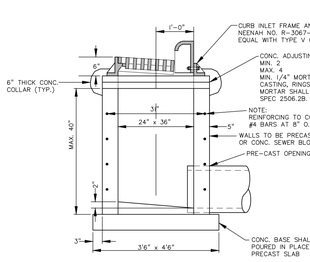

15 RECTANGULAR CATCH BASIN (2'x3')
NO SCALE

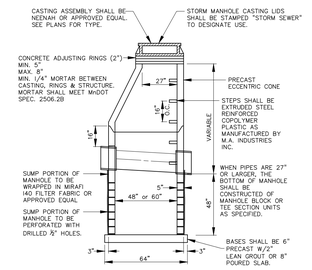

16 SUMP MH/CATCH BASIN
NO SCALE

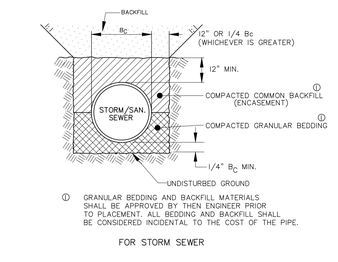

17 HDPE/RCP PIPE BEDDING
NO SCALE

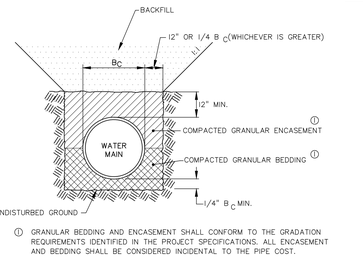

18 WATERMAIN PIPE BEDDING
NO SCALE

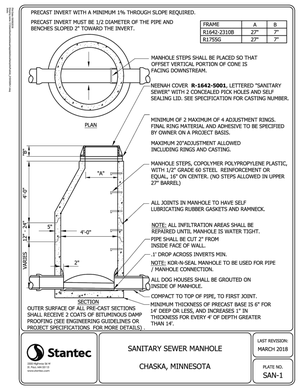

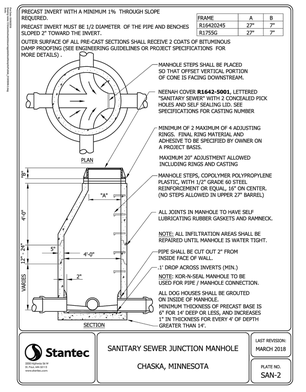

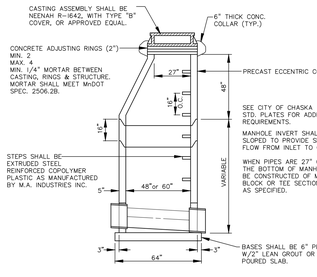

19 STANDARD MANHOLE/CATCH BASIN
NO SCALE

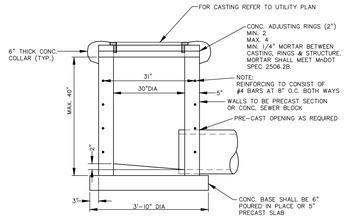

20 CATCH BASIN (30" DIA.)
NO SCALE

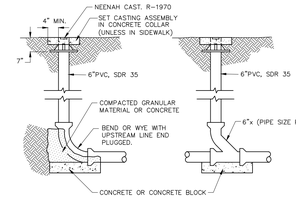

NOTE:
CLEANOUT TOP SHALL BE ENCLOSED IN CASTING AND/OR FABRICATED COVER ASSEMBLY.

21 CLEAN OUT
NO SCALE

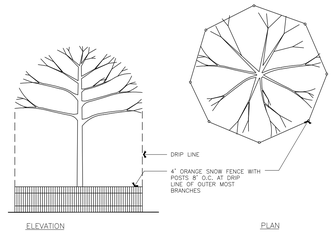

NOTE: TREE PROTECTION SHALL BE PROVIDED BY CONTRACTOR AS REQUIRED TO ENSURE SURVIVABILITY OF EXISTING TREES TO REMAIN. NO HEAVY EQUIPMENT SHALL BE STORED WITHIN THE TREE DRIP LINE AS DESIGNATED ABOVE.

22 TREE PROTECTION FENCE
NO SCALE

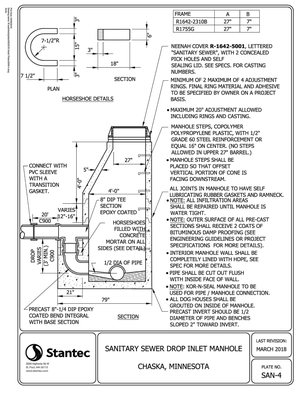

ALLIANT
733 Marquette Avenue
Suite 700
Minneapolis, MN 55402
612.758.3080
www.alliant-inc.com

OAK RIDGE COMMONS
PLANNED UNIT DEVELOPMENT SUBMITTAL
HWY 41 & PEAVEY ROAD
CHASKA, MN

DETAIL SHEET 1

I hereby certify that this plan, specification, or report was prepared by me or under my direct supervision and that I am a duly Licensed PROFESSIONAL ENGINEER under the laws of the State of MINNESOTA

CLARK WICKLUND, PE

4-25-22 — Date
40922 — License No.

QUALITY ASSURANCE/CONTROL

BY	DATE
DATE	ISSUE
9-7-21	PUD RESUBMITTAL
9-30-21	PROGRESS
10-11-21	PUD RESUBMITTAL
10-22-21	CITY COMMENTS
10-26-21	CITY COMMENTS
11-17-21	CCWMO RESUBMITTAL
11-17-21	BID SET
1-10-22	SIGNAGE UPDATE
2-1-22	PUD RESUBMITTAL
3-15-22	LANDSCAPE PLAN UPDATE
3-28-22	CONSTRUCTION DOCUMENTS
4-25-22	CITY & COUNTY COMMENTS

PROJECT TEAM DATA
DESIGNED: MK
DRAWN: MLS
PROJECT NO: 221-0004

C-7.0

Drawing name: X:\2021\210004\plan sheets\210004details.dwg Apr 25, 2022 - 5:09pm

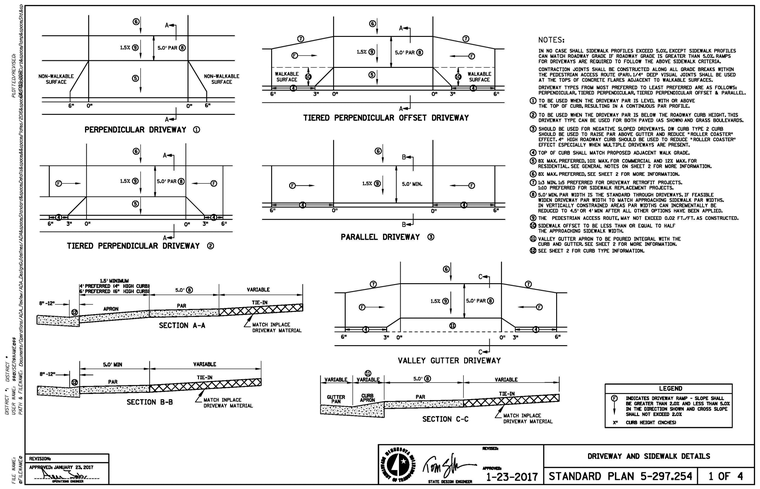

1 MNDOT DRIVEWAY AND SIDEWALK DETAIL
NOT TO SCALE

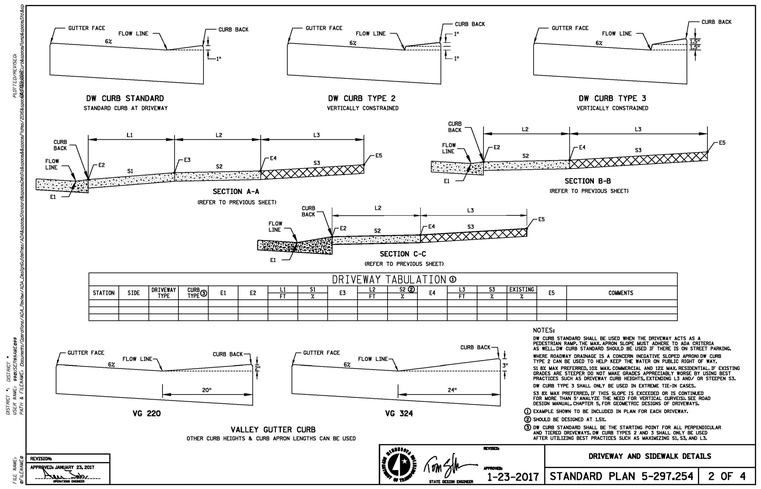

2 MNDOT DRIVEWAY AND SIDEWALK DETAIL
NOT TO SCALE

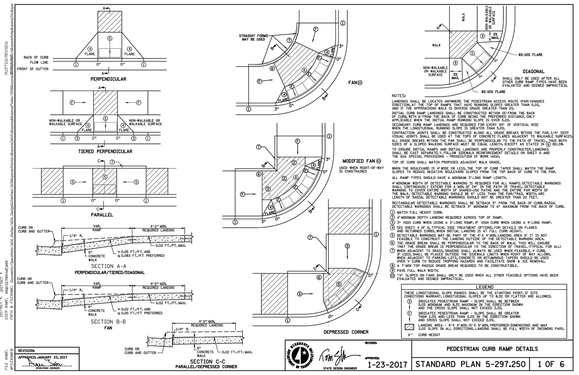

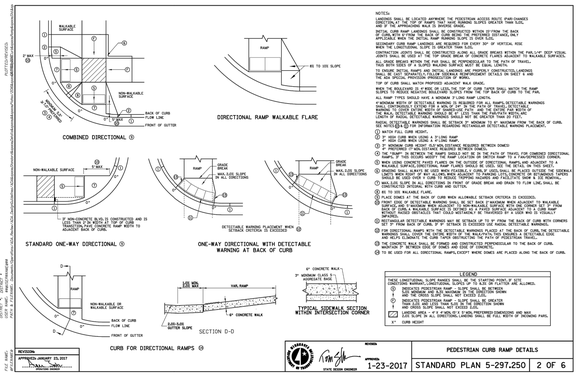

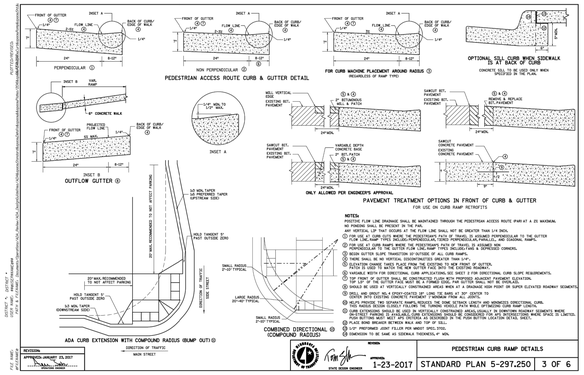

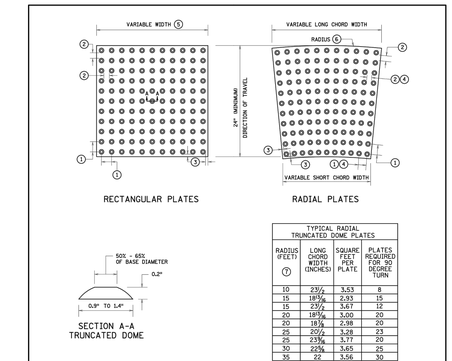

5 DETECTABLE WARNING SURFACE
NOT TO SCALE

ARMOR TILE 24"x48" DARK GREY CAST IN PLACE TILE OR APPROVED EQUAL TO BE INSTALLED ON PRIVATE PROPERTY WHERE NOTED

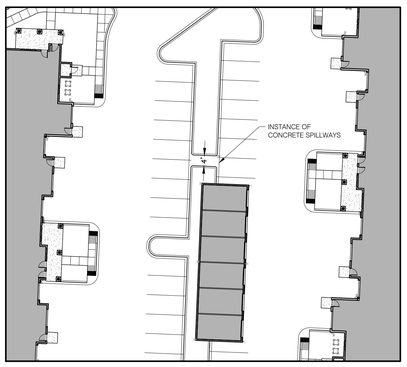

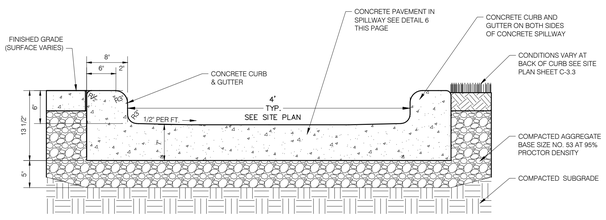

4 CONCRETE SPILLWAYS
NOT TO SCALE

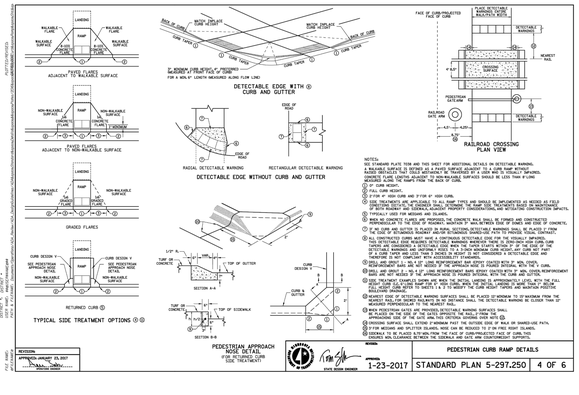

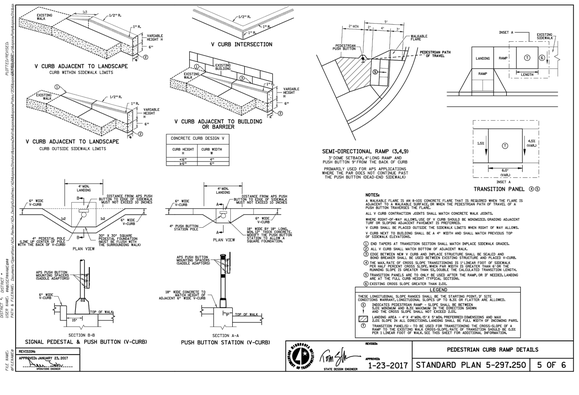

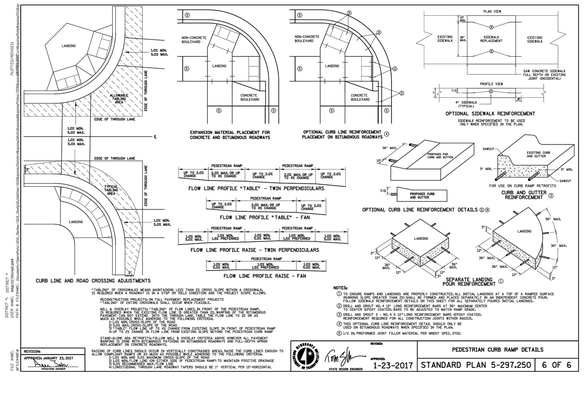

ALLIANT
733 Marquette Avenue
Suite 700
Minneapolis, MN 55402
612.758.3080
www.alliant-inc.com

OAK RIDGE COMMONS
PLANNED UNIT DEVELOPMENT SUBMITTAL
HWY 41 & PEAVEY ROAD
CHASKA, MN

DETAIL SHEET 2

I hereby certify that this plan, specification, or report was prepared by me or under my direct supervision and that I am a duly Licensed PROFESSIONAL ENGINEER under the laws of the State of MINNESOTA

CLARK WICKLUND, PE
4-25-22 Date
40922 License No.

QUALITY ASSURANCE/CONTROL

BY	DATE
DATE	ISSUE
9-7-21	PUD RESUBMITTAL
9-30-21	PROGRESS
10-11-21	PUD RESUBMITTAL
10-22-21	CITY COMMENTS
10-26-21	CITY COMMENTS
11-17-21	CCWMO RESUBMITTAL
11-17-21	BID SET
1-10-22	SIGNAGE UPDATE
2-1-22	PUD RESUBMITTAL
3-15-22	LANDSCAPE PLAN UPDATE
3-28-22	CONSTRUCTION DOCUMENTS
4-25-22	CITY & COUNTY COMMENTS

PROJECT TEAM DATA
DESIGNED: MK
DRAWN: MLS
PROJECT NO: 221-0004

C-7.1

Drawing name: X:\2021\210004\plan sheets\210004details.dwg Apr 25, 2022 - 5:09pm

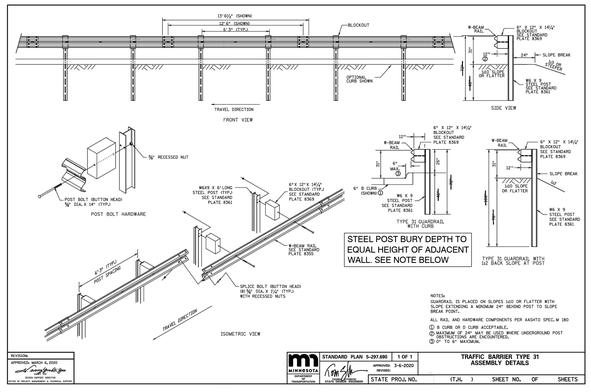

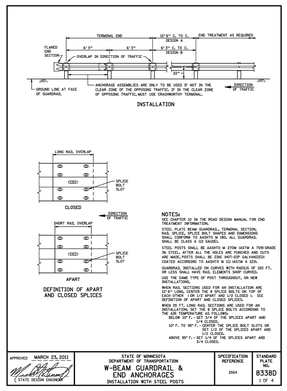

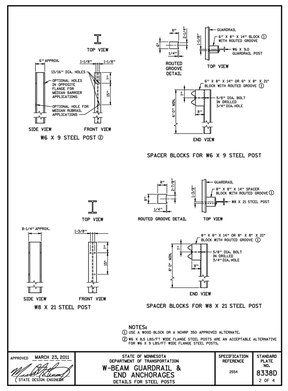

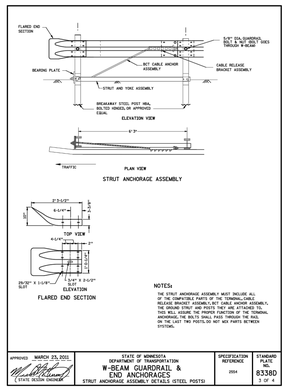

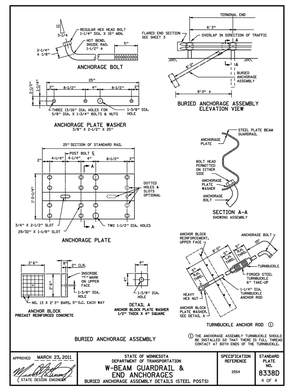

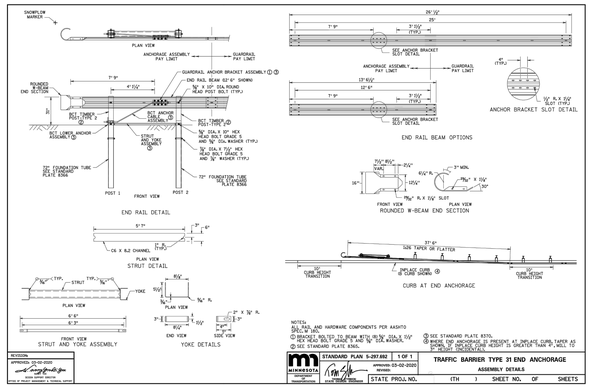

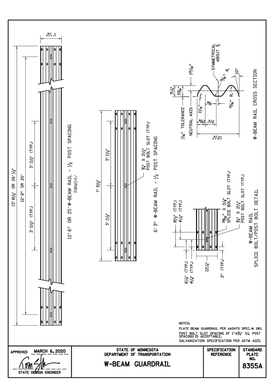

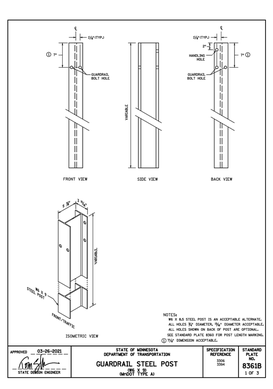

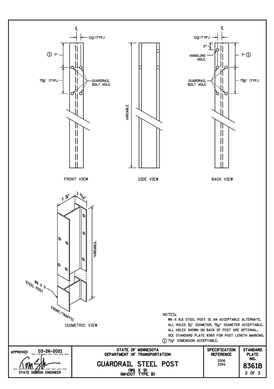

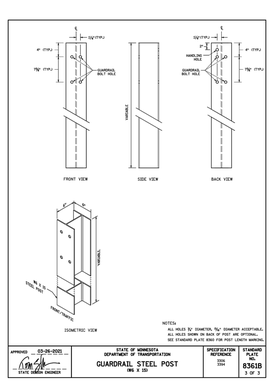

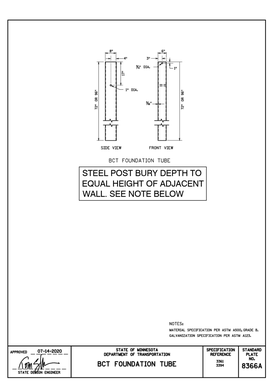

6 MNDOT GUARDRAIL STANDARD DETAILS

NOT TO SCALE

STEEL POST DEPTH SHALL BE HEIGHT OF ADJACENT WALL: COORDINATE WITH RETAINING WALL CONTRACTOR

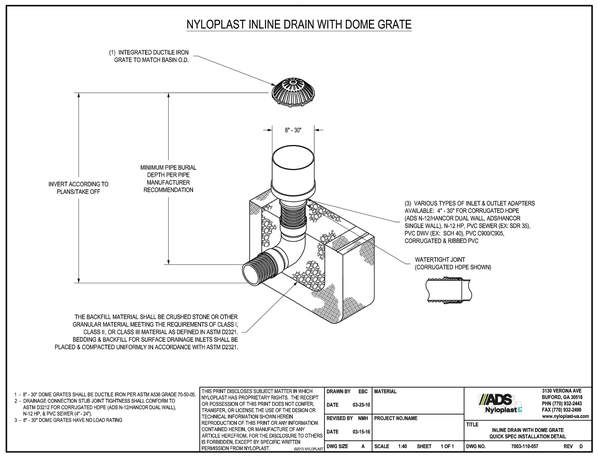

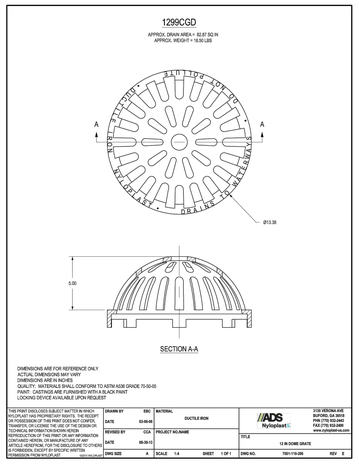

6 NYLOPLAST 12" INLINE DRAIN W/ DOME GRATE

NOT TO SCALE

ALLIANT
733 Marquette Avenue
Suite 700
Minneapolis, MN 55402
612.758.3080
www.alliant-inc.com

OAK RIDGE COMMONS
PLANNED UNIT DEVELOPMENT SUBMITTAL
HWY 41 & PEAVEY ROAD
CHASKA, MN

DETAIL SHEET 3

I hereby certify that this plan, specification, or report was prepared by me or under my direct supervision and that I am a duly Licensed PROFESSIONAL ENGINEER under the laws of the State of MINNESOTA

CLARK WICKLUND, PE

4-25-22 Date | 40922 License No.

QUALITY ASSURANCE/CONTROL

BY DATE

DATE	ISSUE
9-7-21	PUD RESUBMITTAL
9-30-21	PROGRESS
10-11-21	PUD RESUBMITTAL
10-22-21	CITY COMMENTS
10-26-21	CITY COMMENTS
11-17-21	CCWMO RESUBMITTAL
11-17-21	BID SET
1-10-22	SIGNAGE UPDATE
2-1-22	PUD RESUBMITTAL
3-15-22	LANDSCAPE PLAN UPDATE
3-28-22	CONSTRUCTION DOCUMENTS
4-25-22	CITY & COUNTY COMMENTS

PROJECT TEAM DATA

DESIGNED: MK
DRAWN: MLS
PROJECT NO: 221-0004

C-7.2

Drawing name: X:\2021\210004\plan sheets\210004details.dwg Apr 25, 2022 - 5:09pm

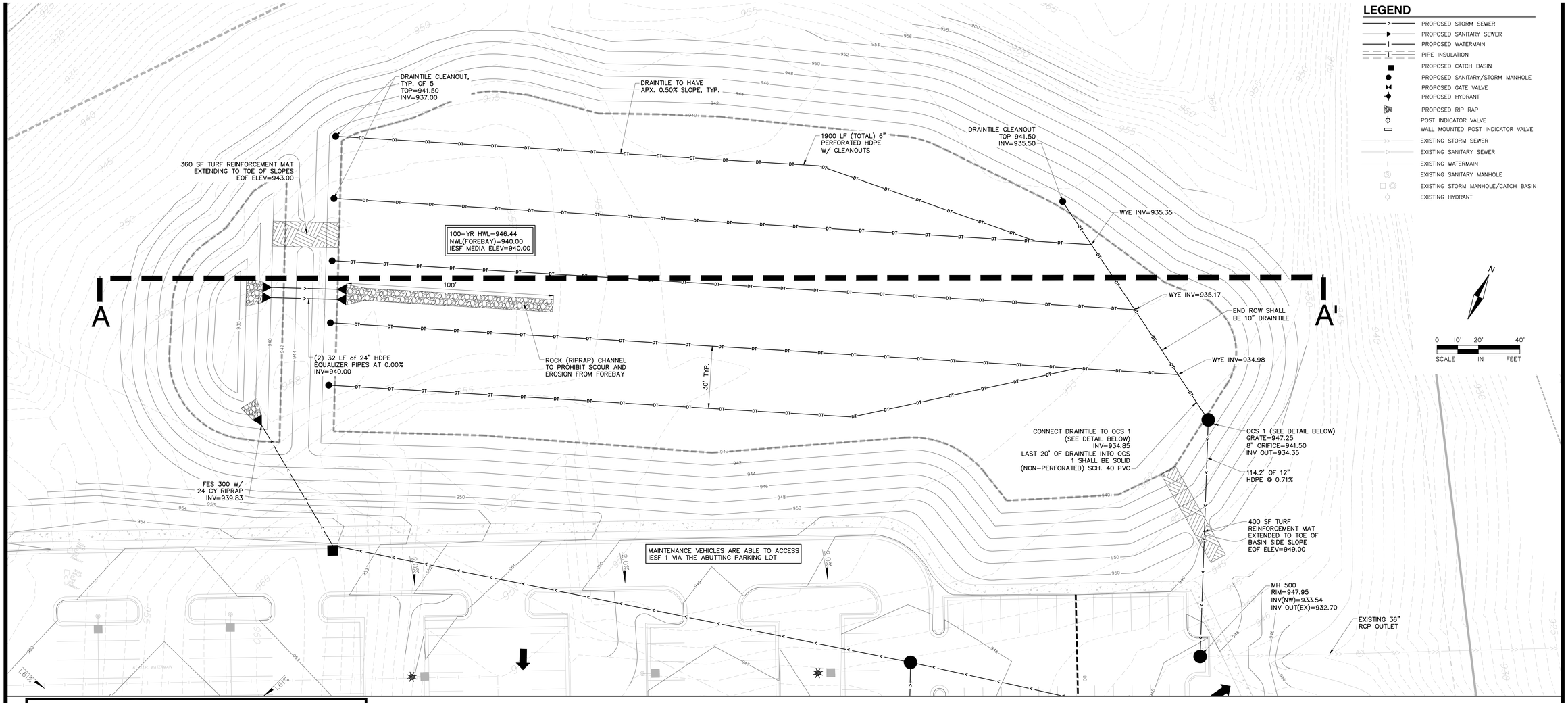

LEGEND

- PROPOSED STORM SEWER
- PROPOSED SANITARY SEWER
- PROPOSED WATERMAIN
- PIPE INSULATION
- PROPOSED CATCH BASIN
- PROPOSED SANITARY/STORM MANHOLE
- PROPOSED GATE VALVE
- PROPOSED HYDRANT
- PROPOSED RIP RAP
- POST INDICATOR VALVE
- WALL MOUNTED POST INDICATOR VALVE
- EXISTING STORM SEWER
- EXISTING SANITARY SEWER
- EXISTING WATERMAIN
- EXISTING SANITARY MANHOLE
- EXISTING STORM MANHOLE/CATCH BASIN
- EXISTING HYDRANT

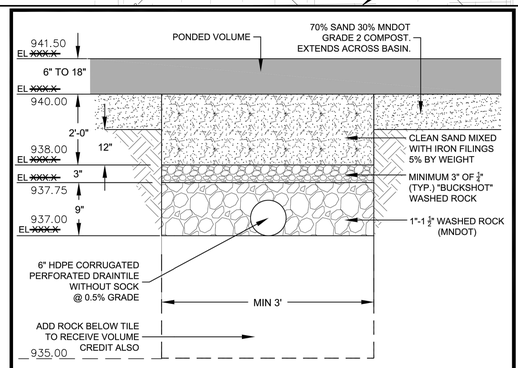

CALCULATIONS TO MEET RULES

VOLUME:

1. VOLUME REDUCTION IS CALCULATED AS 40% OF PONDED VOLUME.
2. TO RECEIVE VOLUME CREDIT, ADD 2 FEET OF ROCK BELOW TILE PER DETAIL 6.
3. IF NO VEGETATION IS PROVIDED, THE VOLUME CALCULATION IS LOWERED TO 50% OF ROCK VOLUME BELOW TILE.
4. TILE INVERT MUST BE 3 FT ABOVE DOWNSTREAM NWL, GROUNDWATER, BEDROCK, ETC.

WATER QUALITY:

1. IRON ENHANCED FILTRATION IS CALCULATED AS 90% TP REMOVAL AND 90% TSS REMOVAL.

DRAWDOWN:

1. 48 HOUR DRAWDOWN OF BMPS IS REQUIRED. TO DETERMINE LENGTH OF TRENCH NEEDED, USE FILTRATION RATE OF 50 CF OF PONDED VOLUME WILL PASS THROUGH ONE LINEAR FOOT OF 3' WIDE TRENCH, OR 17 CF PER SF OF SURFACE AREA. RETROFITS USE MINIMUM OF 150 SF.

IRON FILINGS:

1. AMOUNT OF FILINGS CAN BE DETERMINED BY CALCULATING TOTAL SAND NEEDED TO FILL THE TRENCH, AND MULTIPLYING BY 5%.
2. SAND IRON NEEDS TO BE PRE-MIXED PRIOR TO INSTALLATION. CAN OCCUR OFF SITE.
3. IRON FILINGS MUST BE CLEANED AND WASHED. PROVIDE SUPPLIER INFORMATION TO WMO. NO OIL OR GREASE ALLOWED.

CARVER COUNTY	WENCK ASSOCIATES Responsive partner. Exceptional outcomes.	IRON ENHANCED SAND FILTER	DEC 2016 / DETAIL 2

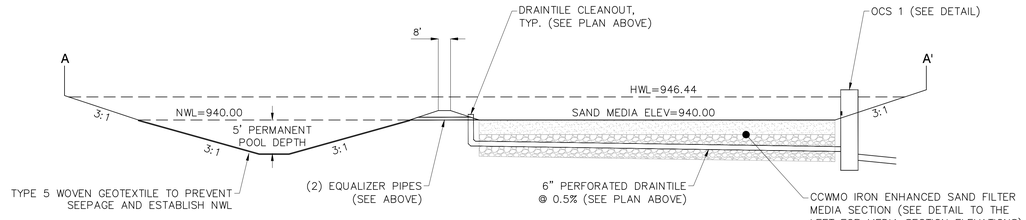

IESF 1 (IRON-ENHANCED SAND FILTER) A-A' CROSS SECTION

NOT TO SCALE

STORMWATER BMP NOTES:

1. ALL TEMPORARY EROSION CONTROL DEVICES MUST BE INSTALLED PRIOR TO INSTALLATION/CONSTRUCTION OF FILTRATION BASIN.
2. ALL STORMWATER RUNOFF SHALL BE DIVERTED AWAY FROM FILTRATION AREA TO A TEMPORARY SEDIMENT BASIN/TRAP UNTIL BASIN IS COMPLETELY GRADED AND PLANTED. SEE INTERIM GRADING PLAN SHEETS (C-2.0).
3. CONSTRUCTION OF BASIN SHALL BE SUSPENDED DURING PERIODS OF RAINFALL OR SNOWMELT. CONSTRUCTION SHALL REMAIN SUSPENDED IF PONDED WATER IS PRESENT OR IF RESIDUAL SOIL MOISTURE CONTRIBUTES SIGNIFICANTLY TO THE POTENTIAL FOR COMPACTION.
4. PLANTINGS WITHIN SAND AREA ARE PROHIBITED. ANY SEEDING OR PLANTING MUST OCCUR UPHILL OF BENCH AND MUST BE IN ACCORDANCE WITH THE MPCA STORMWATER MANUAL. REFER TO LANDSCAPING SHEETS L-2.0-L-3.0.

Estimated Quantities necessary to construct Iron-Enhanced Sand Filter 1 (IESF 1)		
Material	**Quantity**	**Notes/Details**
Sand-Iron Media	4600 CY	24" thick media layer per CCWMO Detail. Sand-Iron needs to be pre-mixed prior to installation (can occur off site).
Iron Filings	230 CY	Determined by calculating the total volume of sand needed, and multiplying by 5%. Provide supplier information to CCWMO.
1/4" washed rock	575 CY	3" thick choker layer of 1/4" "Buckshot" rock per CCWMO Detail.
1"-1.5" washed rock	1720 CY	9" thick layer surrounding the draintile per CCWMO Detail.
1"-1.5" washed rock	4600 CY	24" thick rock layer underneath draintile per CCWMO Detail.
6" Corrugated HDPE	1900 LF	Perforated Draintile (without sock) per CCWMO Detail.
6" Schedule 40 PVC	20 LF	last 20' of Draintile prior to OCS shall be solid (non-perforated).
6" PVC Cleanouts	6 EA	Includes elbows/bends. Capped top elevation= 941.50'

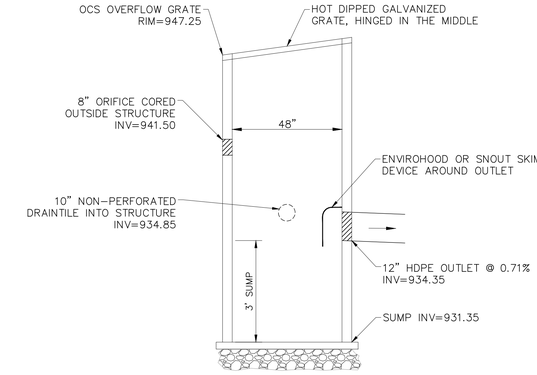

OUTLET CONTROL STRUCTURE 1 (OCS 1)

NOT TO SCALE

ALLIANT
733 Marquette Avenue
Suite 700
Minneapolis, MN 55402
612.758.3080
www.alliant-inc.com

OAK RIDGE COMMONS
PLANNED UNIT DEVELOPMENT SUBMITTAL
HWY 41 & PEAVEY ROAD
CHASKA, MN

BASIN DETAIL SHEET 1

I hereby certify that this plan, specification, or report was prepared by me or under my direct supervision and that I am a duly Licensed PROFESSIONAL ENGINEER under the laws of the State of MINNESOTA

CLARK WICKLUND, PE
4-25-22 — Date
40922 — License No.

QUALITY ASSURANCE/CONTROL

BY DATE

DATE	ISSUE
9-7-21	PUD RESUBMITTAL
9-30-21	PROGRESS
10-11-21	PUD RESUBMITTAL
10-22-21	CITY COMMENTS
10-26-21	CITY COMMENTS
11-17-21	CCWMO RESUBMITTAL
11-17-21	BID SET
1-10-22	SIGNAGE UPDATE
2-1-22	PUD RESUBMITTAL
3-15-22	LANDSCAPE PLAN UPDATE
3-28-22	CONSTRUCTION DOCUMENTS
4-25-22	CITY & COUNTY COMMENTS

PROJECT TEAM DATA
DESIGNED: MK
DRAWN: MLS
PROJECT NO: 221-0004

C-7.3

Drawing name: X:\2021\210004\plan sheets\210004details-basins.dwg Apr 25, 2022 - 5:12pm

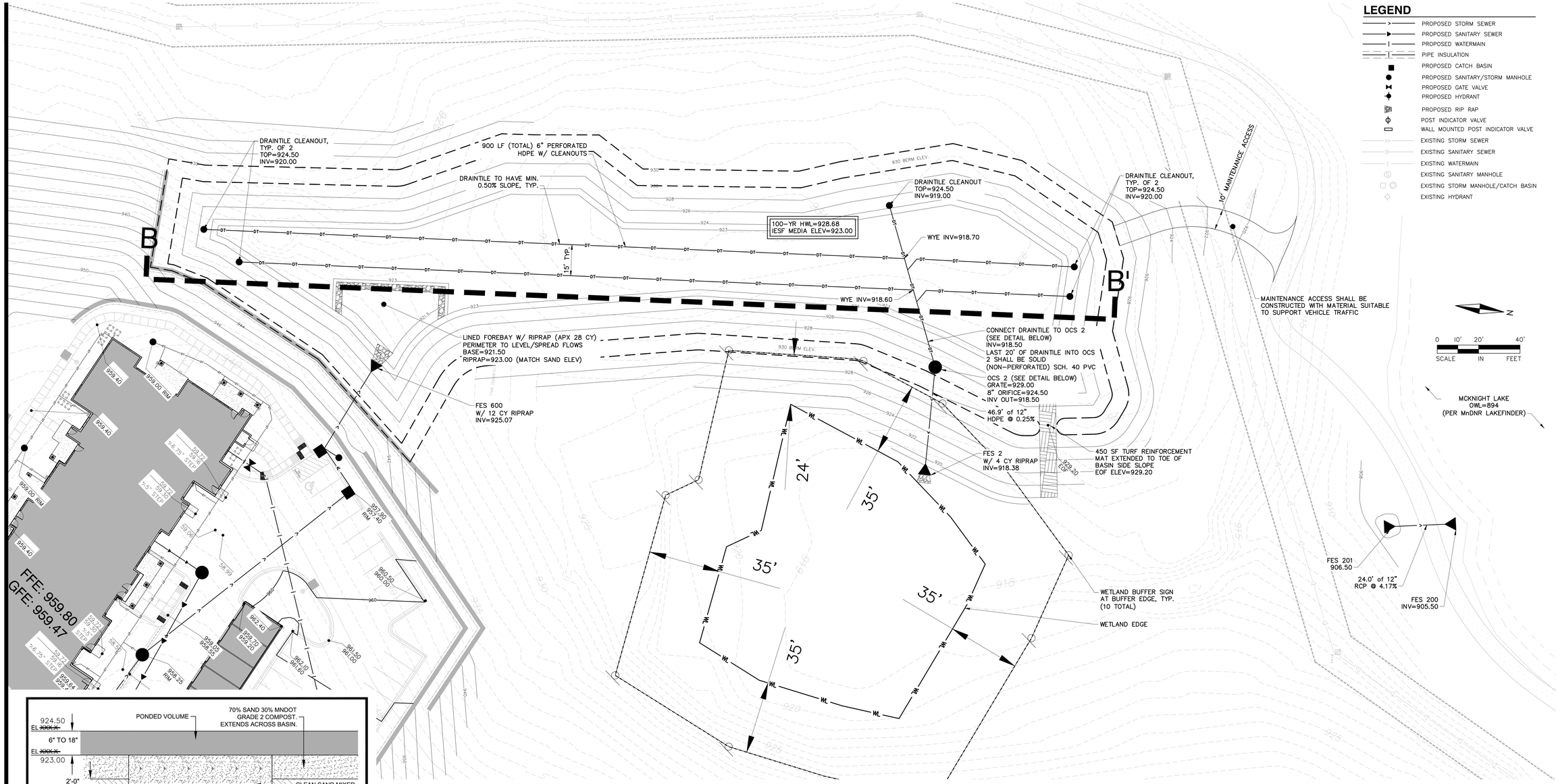

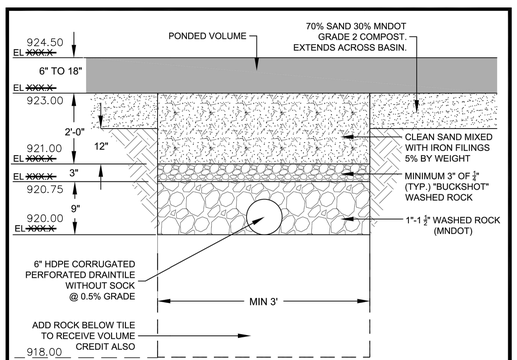

CALCULATIONS TO MEET RULES

VOLUME:

1. VOLUME REDUCTION IS CALCULATED AS 40% OF PONDED VOLUME.
2. TO RECEIVE VOLUME CREDIT, ADD 2 FEET OF ROCK BELOW TILE PER DETAIL 6.
3. IF NO VEGETATION IS PROVIDED, THE VOLUME CALCULATION IS LOWERED TO 50% OF ROCK VOLUME BELOW TILE.
4. TILE INVERT MUST BE 3 FT ABOVE DOWNSTREAM NWL, GROUNDWATER, BEDROCK, ETC.

WATER QUALITY:

1. IRON ENHANCED FILTRATION IS CALCULATED AS 90% TP REMOVAL AND 90% TSS REMOVAL.

DRAWDOWN:

1. 48 HOUR DRAWDOWN OF BMPS IS REQUIRED. TO DETERMINE LENGTH OF TRENCH NEEDED, USE FILTRATION RATE OF 50 CF OF PONDED VOLUME WILL PASS THROUGH ONE LINEAR FOOT OF 3' WIDE TRENCH, OR 17 CF PER SF OF SURFACE AREA. RETROFITS USE MINIMUM OF 150 SF.

IRON FILINGS:

1. AMOUNT OF FILINGS CAN BE DETERMINED BY CALCULATING TOTAL SAND NEEDED TO FILL THE TRENCH, AND MULTIPLYING BY 5%.
2. SAND IRON NEEDS TO BE PRE-MIXED PRIOR TO INSTALLATION. CAN OCCUR OFF SITE.
3. IRON FILINGS MUST BE CLEANED AND WASHED. PROVIDE SUPPLIER INFORMATION TO WMO. NO OIL OR GREASE ALLOWED.

CARVER COUNTY	WENCK ASSOCIATES Responsive partner. Exceptional outcomes.	IRON ENHANCED SAND FILTER	DEC 2016
			DETAIL 2

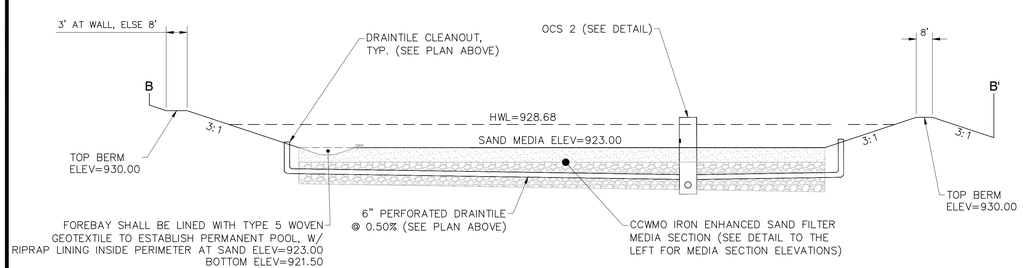

IESF 2 (IRON-ENHANCED SAND FILTER) B-B' CROSS SECTION

NOT TO SCALE

Estimated Quantities necessary to construct Iron-Enhanced Sand Filter 2 (IESF 2)		
Material	**Quantity**	**Notes/Details**
Sand-Iron Media	1170 CY	24" thick media layer per CCWMO Detail. Sand-Iron needs to be pre-mixed prior to installation (can occur off site).
Iron Filings	60 CY	Determined by calculating the total volume of sand needed, and multiplying by 5%. Provide supplier information to CCWMO.
1/4" washed rock	145 CY	3" thick choker layer of 1/4" "Buckshot" rock per CCWMO Detail.
1"-1.5" washed rock	440 CY	9" thick layer surrounding the draintile per CCWMO Detail.
1"-1.5" washed rock	1170 CY	24" thick rock layer underneath draintile per CCWMO Detail.
6" Corrugated HDPE	900 LF	Perforated Draintile (without sock) per CCWMO Detail.
6" Schedule 40 PVC	20 LF	Last 20' of Draintile prior to OCS shall be solid (non-perforated).
6" PVC Cleanouts	5 EA	Includes elbows/bends. Capped top elevation= 924.50'

STORMWATER BMP NOTES:

1. ALL TEMPORARY EROSION CONTROL DEVICES MUST BE INSTALLED PRIOR TO INSTALLATION/CONSTRUCTION OF FILTRATION BASIN.
2. ALL STORMWATER RUNOFF SHALL BE DIVERTED AWAY FROM FILTRATION AREA TO A TEMPORARY SEDIMENT BASIN/TRAP UNTIL BASIN IS COMPLETELY GRADED AND PLANTED. SEE INTERIM GRADING PLAN SHEETS (C-2.0).
3. CONSTRUCTION OF BASIN SHALL BE SUSPENDED DURING PERIODS OF RAINFALL OR SNOWMELT. CONSTRUCTION SHALL REMAIN SUSPENDED IF PONDED WATER IS PRESENT OR IF RESIDUAL SOIL MOISTURE CONTRIBUTES SIGNIFICANTLY TO THE POTENTIAL FOR COMPACTION.
4. PLANTINGS WITHIN SAND AREA ARE PROHIBITED. ANY SEEDING OR PLANTING MUST OCCUR UPHILL OF BENCH AND MUST BE IN ACCORDANCE WITH THE MPCA STORMWATER MANUAL. REFER TO LANDSCAPING SHEETS L-2.0-L-3.0.

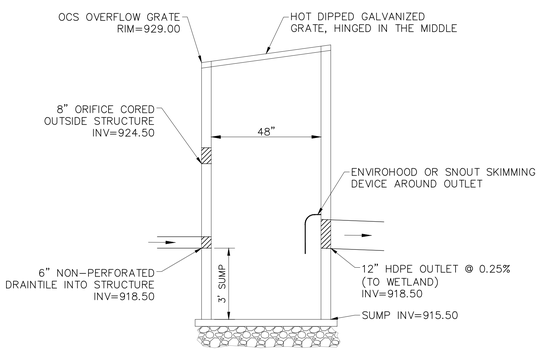

OUTLET CONTROL STRUCTURE 2 (OCS 2)

NOT TO SCALE

ALLIANT
733 Marquette Avenue
Suite 700
Minneapolis, MN 55402
612.758.3080
www.alliant-inc.com

OAK RIDGE COMMONS
PLANNED UNIT DEVELOPMENT SUBMITTAL
HWY 41 & PEAVEY ROAD
CHASKA, MN

BASIN DETAIL SHEET 2

I hereby certify that this plan, specification, or report was prepared by me or under my direct supervision and that I am a duly Licensed PROFESSIONAL ENGINEER under the laws of the State of MINNESOTA

CLARK WICKLUND, PE
4-25-22 Date
40922 License No.

QUALITY ASSURANCE/CONTROL

BY	DATE
DATE	ISSUE
9-7-21	PUD RESUBMITTAL
9-30-21	PROGRESS
10-11-21	PUD RESUBMITTAL
10-22-21	CITY COMMENTS
10-26-21	CITY COMMENTS
11-17-21	CCWMO RESUBMITTAL
11-17-21	BID SET
1-10-22	SIGNAGE UPDATE
2-1-22	PUD RESUBMITTAL
3-15-22	LANDSCAPE PLAN UPDATE
3-28-22	CONSTRUCTION DOCUMENTS
4-25-22	CITY & COUNTY COMMENTS

PROJECT TEAM DATA
DESIGNED: MK
DRAWN: MLS
PROJECT NO: 221-0004

C-7.4

Drawing name: X:\2021\210004\plan sheets\210004details-basins.dwg Apr 25, 2022 - 5:14pm


MCKNIGHT LAKE
POND
BIG WOODS
EXISTING TREE CANOPY TO BE REMOVED DURING MASS GRADING OPERATIONS
EXISTING TREES TO BE REMOVED
EXISTING TREES TO REMAIN
EXISTING TREES TO REMAIN
EXISTING TREES TO BE REMOVED
EXISTING TREES TO BE REMOVED DURING MASS GRADING OPERATIONS
EXISTING TREE CANOPY TO BE REMOVED DURING MASS GRADING OPERATIONS
EXISTING TREE CANOPY TO BE REMOVED DURING MASS GRADING OPERATIONS
EXISTING TREE CANOPY TO BE REMOVED DURING MASS GRADING OPERATIONS
OAK RIDGE DRIVE
OAK RIDGE DRIVE
TH. 41
TH.
CHICAGO, MILWAUKEE, ST. PAUL & PACIFIC RAILROAD
REPAIR EXISTING EROSION, FILL WITH SOIL, PROVIDE SEED AND EROSION CONTROL BLANKET. COORDINATE WITH CITY
COSTCO WHOLESALE
BLDG 1
BLDG 2
BLDG 3
BLDG 4
BLDG 5
BLDG 6
BLDG 7
BLDG 8
BLDG 9
BLDG 10
BLDG 11
BLDG 12
BLDG 13
BLDG 14
BLDG 15
BLDG 16
BLDG 17
BLDG 18
BLDG 19
BLDG 20
BLDG

EXISTING TREES TO REMAIN

EXISTING TREES TO BE REMOVED

OAK RIDGE DRIVE

OAK RIDGE DRIVE

TH. 41

COSTCO WHOLESALE

184,545 S.F.
FFE = 968.00

B20E BLDG 4

B20E BLDG 3

10' SIDE PARKING SETBACK

20' REAR BUILDING SETBACK

150' SIDE BUILDING SETBACK (FROM TH. 41 CENTERLINE)

80' SIDE PARKING SETBACK (FROM TH. 41 CENTERLINE)

EXISTING TREE CANOPY TO BE REMOVED DURING MASS GRADING OPERATIONS

EXISTING TREE CANOPY TO BE REMOVED DURING MASS GRADING OPERATIONS

GRADE BREAK

LEGEND:

- SURVEYED TREES INSIDE TREED STEEP SLOPE BUFFER
- EXISTING TREE TO BE REMOVED
- EXISTING DECIDUOUS TREE TO REMAIN
- EXISTING CONIFEROUS TREE TO REMAIN
- PROPOSED CURB & GUTTER
- PROPOSED OUTFALL CURB & GUTTER (PROVIDE 5' CURB TRANSITION)
- CURB & GUTTER (BY OTHERS)
- LOT LINE
- PROPERTY LINE
- DRAINAGE & UTILITY EASEMENT
- BUILDING SETBACK
- WL — EXISTING WETLAND
- WETLAND SETBACK
- TREED STEEP SLOPE BUFFER
- TREED STEEP SLOPE BUILDING SETBACK
- APPROXIMATE REMOVAL LIMITS OF EXISTING TREE CANOPY
- APPROXIMATE TREE CANOPY TO REMAIN

N

0 20' 40' 80'
SCALE IN FEET

ALLIANT
733 Marquette Avenue
Suite 700
Minneapolis, MN 55402
612.758.3080
www.alliant-inc.com

OAK RIDGE COMMONS
PLANNED UNIT DEVELOPMENT SUBMITTAL
HWY 41 & PEAVEY ROAD
CHASKA, MN

TREE PRESERVATION AND REMOVAL PLAN - VIEW 1

I hereby certify that this plan, specification, or report was prepared by me or under my direct supervision and that I am a duly Licensed LANDSCAPE ARCHITECT under the laws of the State of MINNESOTA

MARK KRONBECK PLA, ASLA

4-25-22 — Date
26222 — License No.

QUALITY ASSURANCE/CONTROL

BY	DATE

DATE	ISSUE
9-7-21	PUD RESUBMITTAL
9-30-21	PROGRESS
10-11-21	PUD RESUBMITTAL
10-22-21	CITY COMMENTS
10-26-21	CITY COMMENTS
11-17-21	CCWMO RESUBMITTAL
11-17-21	BID SET
1-10-22	SIGNAGE UPDATE
2-1-22	PUD RESUBMITTAL
3-15-22	LANDSCAPE PLAN UPDATE
3-28-22	CONSTRUCTION DOCUMENTS
4-25-22	CITY & COUNTY COMMENTS

PROJECT TEAM DATA

DESIGNED:	MK
DRAWN:	MLS
PROJECT NO:	221-0004

L-1.1

Drawing name: X:\2021\210004\plan sheets\210004tree.dwg Apr 25, 2022 - 5:26pm



EXISTING TREE CREDIT & MITIGATION CALCULATION

TOTAL CALIPER INCHES OF OVERSTORY TREES REQUIRED = THE TOTAL GROSS SQUARE FOOTAGE OF ALL FLOORS DIVIDED BY 320

HOTEL AND CONVENTION CENTER PROPERTY:
171,000 S.F. / 320 = 534 CALIPER INCHES REQUIRED

COSTCO PROPERTY:
164,485 S.F. (2 FLOORS) = 328,970 S.F. / 320 = 1,028 CALIPER INCHES REQUIRED

TOTAL CALIPER INCHES REQUIRED = 534 + 1,028 = 1,562 CALIPER INCHES REQUIRED

TOTAL SIGNIFICANT CALIPER INCHES SURVEYED:	3,002 INCHES
TOTAL SIGNIFICANT CALIPER INCHES REMOVED:	2,267 INCHES
TOTAL SIGNIFICANT CALIPER INCHES PRESERVED:	765 INCHES PRESERVED

1,562 REQUIRED CALIPER INCHES – 765 PRESERVED CALIPER INCHES = 797 CALIPER INCHES TO BE REPLACED

(TREE REPLACEMENT TO BE ARCHIVED ON BOTH PROPERTIES DUE TO LACK OF AVAILABLE PLANTING SPACE PROVIDED ON THE COSTCO SITE DUE TO RETAINING WALLS)

NOTE: REFER TO LANDSCAPE PLAN TO MITIGATION AND REPLACEMENT CALCULATIONS

LEGEND:

- SURVEYED TREES INSIDE TREED STEEP SLOPE BUFFER
- 31354 948.19 TRC — EXISTING TREE TO BE REMOVED
- EXISTING DECIDUOUS TREE TO REMAIN
- EXISTING CONIFEROUS TREE TO REMAIN
- PROPOSED CURB & GUTTER
- PROPOSED OUTFALL CURB & GUTTER (PROVIDE 5' CURB TRANSITION)
- CURB & GUTTER (BY OTHERS)
- LOT LINE
- PROPERTY LINE
- DRAINAGE & UTILITY EASEMENT
- BUILDING SETBACK
- WL — EXISTING WETLAND
- WETLAND SETBACK
- TREED STEEP SLOPE BUFFER
- TREED STEEP SLOPE BUILDING SETBACK
- APPROXIMATE REMOVAL LIMITS OF EXISTING TREE CANOPY
- APPROXIMATE TREE CANOPY TO REMAIN

0 20' 40' 80'
SCALE IN FEET

ALLIANT
733 Marquette Avenue
Suite 700
Minneapolis, MN 55402
612.758.3080
www.alliant-inc.com

OAK RIDGE COMMONS
PLANNED UNIT DEVELOPMENT SUBMITTAL
HWY 41 & PEAVEY ROAD
CHASKA, MN

TREE PRESERVATION AND REMOVAL PLAN - VIEW 2

I hereby certify that this plan, specification, or report was prepared by me or under my direct supervision and that I am a duly Licensed LANDSCAPE ARCHITECT under the laws of the State of MINNESOTA

MARK KRONBECK PLA, ASLA

4-25-22 — Date
26222 — License No.

QUALITY ASSURANCE/CONTROL

BY	DATE

DATE	ISSUE
9-7-21	PUD RESUBMITTAL
9-30-21	PROGRESS
10-11-21	PUD RESUBMITTAL
10-22-21	CITY COMMENTS
10-26-21	CITY COMMENTS
11-17-21	CCWMO RESUBMITTAL
11-17-21	BID SET
1-10-22	SIGNAGE UPDATE
2-1-22	PUD RESUBMITTAL
3-15-22	LANDSCAPE PLAN UPDATE
3-28-22	CONSTRUCTION DOCUMENTS
4-25-22	CITY & COUNTY COMMENTS

PROJECT TEAM DATA

DESIGNED:	MK
DRAWN:	MLS
PROJECT NO:	221-0004

L-1.2

Drawing name: X:\2021\210004\plan sheets\210004tree.dwg Apr 25, 2022 - 5:31pm



ALLIANT
733 Marquette Avenue
Suite 700
Minneapolis, MN 55402
612.758.3080
www.alliant-inc.com

OAK RIDGE COMMONS
PLANNED UNIT DEVELOPMENT SUBMITTAL
HWY 41 & PEAVEY ROAD
CHASKA, MN

TREE PRESERVATION AND REMOVAL PLAN - VIEW 3

I hereby certify that this plan, specification, or report was prepared by me or under my direct supervision and that I am a duly Licensed LANDSCAPE ARCHITECT under the laws of the State of MINNESOTA

MARK KRONBECK PLA, ASLA
4-25-22 Date
26222 License No.

QUALITY ASSURANCE/CONTROL

BY	DATE
DATE	**ISSUE**
9-7-21	PUD RESUBMITTAL
9-30-21	PROGRESS
10-11-21	PUD RESUBMITTAL
10-22-21	CITY COMMENTS
10-26-21	CITY COMMENTS
11-17-21	CCWMO RESUBMITTAL
11-17-21	BID SET
1-10-22	SIGNAGE UPDATE
2-1-22	PUD RESUBMITTAL
3-15-22	LANDSCAPE PLAN UPDATE
3-28-22	CONSTRUCTION DOCUMENTS
4-25-22	CITY & COUNTY COMMENTS

PROJECT TEAM DATA
DESIGNED: MK
DRAWN: MLS
PROJECT NO: 221-0004

L-1.3

Drawing name: X:\2021\210004\plan sheets\210004tree.dwg Apr 25, 2022 - 5:37pm

Point Number	Type	Species	Inches	Significant	Removal	Significant Inches Removed
1251	Deciduous	Oak	25	X	X	25
1252	Deciduous	Elm	8	X	X	8
1253	Deciduous	Oak	21	X	X	21
1254	Deciduous	Oak	24	X	X	24
1255	Deciduous	Maple	38	X	X	38
1256	Deciduous	Ash	10	X	X	10
1257	Deciduous	Ash	12	X	X	12
1258	Deciduous	Oak	8	X	X	8
1259	Deciduous	Oak	8	X	X	8
1260	Deciduous	Ash	8	X	X	8
1261	Deciduous	Elm	6	X	X	6
1262	Deciduous	Ash	12	X	X	12
1263	Deciduous	Elm	13	X	X	13
1264	Deciduous	Oak	34	X	X	34
1265	Deciduous	Elm	8	X	X	8
1266	Deciduous	Oak	26	X	X	26
1267	Deciduous	Cherry	6	X	X	6
1268	Deciduous	Ash	8	X	X	8
1269	Deciduous	Oak	26	X	X	26
1270	Deciduous	Oak	26	X	X	26
1271	Deciduous	Oak	24	X	X	24
1272	Deciduous	Oak	34	X	X	34
1273	Deciduous	Cherry	6	X	X	6
1274	Deciduous	Ash	6	X	X	6
1275	Deciduous	Ash	10	X	X	10
1276	Deciduous	Ash	6	X	X	6
1277	Deciduous	Ash	6	X	X	6
1278	Deciduous	Ash	6	X	X	6
1279	Deciduous	Oak	27	X	X	27
1280	Deciduous	Ash	7	X	X	7
1281	Deciduous	Oak	34	X	X	34
1282	Deciduous	Cherry	9	X	X	9
1283	Deciduous	Oak	29	X	X	29
1284	Deciduous	Cherry	8	X	X	8
1285	Deciduous	Ash	9	X	X	9
1286	Deciduous	Ash	6	X	X	6
1287	Deciduous	Ash	7	X	X	7
1288	Deciduous	Cedar	10	X	X	10
1289	Deciduous	Cedar	9	X	X	9
1290	Deciduous	Ash	8	X	X	8
1291	Deciduous	Ash	8	X	X	8
1292	Deciduous	Cedar	7	X	X	7
1293	Deciduous	Cedar	7	X	X	7
1294	Deciduous	Cedar	6	X	X	6
1295	Deciduous	Cedar	6	X	X	6
1296	Deciduous	Cedar	9	X	X	9
1297	Deciduous	Cedar	9	X	X	9
1298	Deciduous	Cedar	7	X	X	7
1299	Deciduous	Cedar	7	X	X	7
1300	Deciduous	Ash	8	X	X	8
1301	Deciduous	Ash	8	X	X	8
1302	Deciduous	Box Elder	7	X	X	7
1303	Deciduous	Ash	9	X	X	9
1304	Deciduous	Ash	8	X	X	8
1305	Deciduous	Ash	6	X	X	6
1306	Deciduous	Oak	10	X	X	10
1307	Deciduous	Elm	6	X	X	6
1308	Deciduous	Cedar	6	X	X	6
1309	Deciduous	Ash	6	X	X	6
1310	Deciduous	Ash	6	Steep Slope/Buffer		
1311	Deciduous	Ash	6	Steep Slope/Buffer		
1312	Deciduous	Ash	6	X	X	6
1313	Deciduous	Oak	7	X	X	7
1314	Deciduous	Oak	7	X	X	7
1315	Deciduous	Oak	10	X	X	10
1316	Deciduous	Cedar	6	X	X	6
1317	Deciduous	Oak	10	X	X	10
1318	Deciduous	Oak	6	X	X	6
1319	Deciduous	Cherry	6	X	X	6
1320	Deciduous	Cherry	6	X		
1321	Deciduous	Oak	40	Steep Slope/Buffer		
1322	Deciduous	Elm	8	X		
1323	Deciduous	Cedar	6	X	X	6
1324	Deciduous	Cedar	12	X	X	12
1325	Deciduous	Cedar	7	X	X	7
1326	Deciduous	Elm	6	X	X	6
1327	Deciduous	Ash	7	X	X	7
1328	Deciduous	Ash	6	X	X	6
1329	Deciduous	Ash	10	X	X	10
1330	Deciduous	Ash	6	X	X	6
1331	Deciduous	Ash	6	X	X	6
1332	Deciduous	Ash	8	X	X	8
1333	Deciduous	Ash	6	X	X	6
1334	Deciduous	Cedar	8	X	X	8
1335	Deciduous	Cedar	8	X	X	8
1336	Deciduous	Cedar	8	X	X	8
1337	Deciduous	Cedar	6	X	X	6
1338	Deciduous	Aspen	8	X	X	8
1339	Deciduous	Cherry	6	X	X	6
1340	Deciduous	Cherry	6	X	X	6
1341	Deciduous	Cedar	8	X	X	8
1342	Deciduous	Cedar	6	X	X	6
1343	Deciduous	Cedar	7	X	X	7
1344	Deciduous	Cedar	8	X	X	8
1345	Deciduous	Cherry	6	X	X	6
1346	Deciduous	Cedar	7	X	X	7
1347	Deciduous	Aspen	8	X	X	8
1348	Deciduous	Elm	8	X	X	8
1349	Deciduous	Aspen	7	X	X	7
1350	Coniferous	Red Pine	10	X	X	10
1351	Deciduous	Cedar	12	X	X	12
1352	Deciduous	Aspen	7	X	X	7
1353	Deciduous	Cedar	10	X	X	10
1354	Deciduous	Aspen	6	X	X	6
1355	Deciduous	Cedar	10	X	X	10
1356	Deciduous	Cedar	11	X	X	11
1357	Deciduous	Ash	6	X	X	6
1358	Deciduous	Ash	8	X	X	8
1359	Deciduous	Ash	7	X	X	7
1360	Deciduous	Ash	7	X	X	7
1361	Deciduous	Ash	6	X	X	6
1362	Deciduous	Ash	6	X	X	6
1363	Deciduous	Ash	6	X	X	6
1364	Deciduous	Ash	6	X	X	6
1365	Deciduous	Aspen	7	X	X	7
1366	Deciduous	Ash	7	X	X	7
1367	Deciduous	Aspen	6	X	X	6
1368	Deciduous	Cedar	7	X	X	7
1369	Deciduous	Cedar	10	X	X	10
1370	Deciduous	Cedar	6	X	X	6
1371	Deciduous	Cedar	7	X	X	7
1372	Deciduous	Cedar	6	X	X	6
1373	Deciduous	Cedar	6	X	X	6
1374	Deciduous	Cedar	6	X	X	6
1375	Deciduous	Cedar	8	X	X	8
1376	Deciduous	Cedar	6	X	X	6
1377	Deciduous	Cedar	7	X	X	7
1378	Deciduous	Cedar	6	X	X	6
1379	Deciduous	Cedar	9	X	X	9

Point Number	Type	Species	Inches	Significant	Removal	Significant Inches Removed
1380	Deciduous	Cedar	6	X	X	6
1381	Deciduous	Cedar	8	X	X	8
1382	Deciduous	Cedar	6	X	X	6
1383	Deciduous	Cedar	11	X	X	11
1384	Deciduous	Cherry	6	X	X	6
1385	Deciduous	Cedar	11	X	X	11
1386	Deciduous	Cedar	9	X	X	9
1387	Deciduous	Cedar	8	X	X	8
1388	Deciduous	Cedar	7	X	X	7
1389	Deciduous	Cedar	6	X	X	6
1390	Deciduous	Cedar	8	X	X	8
1391	Deciduous	Cedar	7	X	X	7
1392	Deciduous	Cedar	12	X	X	12
1393	Deciduous	Oak	6	X	X	6
1394	Deciduous	Cedar	6	X	X	6
1395	Deciduous	Cedar	9	X	X	9
1396	Deciduous	Cedar	8	X	X	8
1397	Deciduous	Cedar	6	X	X	6
1398	Deciduous	Cedar	9	X	X	9
1399	Deciduous	Cedar	7	X	X	7
1400	Deciduous	Cedar	7	X	X	7
1401	Deciduous	Ash	7	X	X	7
1402	Deciduous	Cherry	8	X	X	8
1403	Deciduous	Ash	6	X	X	6
1404	Deciduous	Cedar	13	X	X	13
1405	Deciduous	Cedar	6	X	X	6
1406	Deciduous	Cedar	7	X	X	7
1407	Deciduous	Ash	6	X	X	6
1408	Deciduous	Ash	6	X	X	6
1409	Deciduous	Ash	15	X	X	15
1410	Deciduous	Ash	8	X	X	8
1411	Deciduous	Ash	7	X	X	7
1412	Deciduous	Ash	9	X	X	9
1413	Deciduous	Ash	6	X	X	6
1414	Deciduous	Ash	6	X	X	6
1415	Deciduous	Ash	6	X	X	6
1416	Deciduous	Cherry	7	X	X	7
1417	Deciduous	Ash	7	X	X	7
1418	Deciduous	Ash	6	X	X	6
1419	Deciduous	Ash	7	X	X	7
1420	Deciduous	Ash	6	X		
1421	Deciduous	Ash	7	X	X	7
1422	Deciduous	Ash	6	X	X	6
1423	Deciduous	Ash	6	X	X	6
1424	Deciduous	Ash	8	X	X	8
1425	Deciduous	Ash	6	X	X	6
1426	Deciduous	Ash	8	X	X	8
1427	Deciduous	Ash	6	X	X	6
1428	Deciduous	Ash	7	X	X	7
1429	Deciduous	Ash	6	X	X	6
1430	Deciduous	Ash	7	X	X	7
1431	Deciduous	Ash	9	X	X	9
1432	Deciduous	Cottonwood	19	X	X	19
1433	Deciduous	Cottonwood	26	X	X	26
1434	Deciduous	Box Elder	13	X	X	13
1435	Deciduous	Ash	12	X	X	12
1436	Deciduous	Ash	15	X	X	15
1437	Deciduous	Ash	11	X	X	11
1438	Deciduous	Ash	14	X	X	14
1439	Deciduous	Ash	14	X	X	14
1440	Deciduous	Ash	15	X	X	15
1441	Deciduous	Box Elder	7	X	X	7
1442	Deciduous	Ash	6	X	X	6
1443	Deciduous	Ash	6	X	X	6
1444	Deciduous	Ash	6	X	X	6
1445	Deciduous	Ash	6	X	X	6
1446	Deciduous	Ash	7	X	X	7
1447	Deciduous	Ash	8	X	X	8
1448	Deciduous	Ash	7	X	X	7
1449	Deciduous	Ash	7	X	X	7
1450	Deciduous	Ash	8	X	X	8
1451	Deciduous	Ash	6	X	X	6
1452	Deciduous	Ash	6	X	X	6
1453	Deciduous	Ash	7	X	X	7
1454	Deciduous	Ash	6	X	X	6
1455	Deciduous	Ash	7	X	X	7
1456	Deciduous	Ash	10	X	X	10
1457	Deciduous	Ash	8	X	X	8
1458	Deciduous	Ash	7	X	X	7
1459	Deciduous	Ash	8	X	X	8
1460	Deciduous	Ash	7	X	X	7
1461	Deciduous	Box Elder	12	X	X	12
1462	Deciduous	Box Elder	8	X	X	8
1463	Deciduous	Ash	7	X	X	7
1464	Deciduous	Box Elder	10	X	X	10
1465	Deciduous	Cottonwood	12	X	X	12
1466	Deciduous	Box Elder	15	X	X	15
1467	Deciduous	Ash	10	X	X	10
1468	Deciduous	Ash	12	X	X	12
1469	Deciduous	Ash	12	X	X	12
1470	Deciduous	Ash	7	X	X	7
1471	Deciduous	Box Elder	6	X	X	6
1472	Deciduous	Ash	10	X	X	10
1473	Deciduous	Box Elder	8	X	X	8
1474	Deciduous	Ash	20	X	X	20
1475	Deciduous	Box Elder	15	X	X	15
1476	Deciduous	Box Elder	11	X	X	11
1477	Deciduous	Box Elder	18	X	X	18
1478	Deciduous	Box Elder	13	X	X	13
1479	Deciduous	Ash	6	X	X	6
1480	Deciduous	Ash	6	X	X	6
1481	Deciduous	Ash	15	X	X	15
1482	Deciduous	Ash	6	X	X	6
1483	Deciduous	Ash	15	X	X	15
1484	Deciduous	Ash	10	X	X	10
1485	Deciduous	Ash	11	X	X	11
1486	Deciduous	Ash	10	X	X	10
1487	Deciduous	Ash	6	X	X	6
1488	Deciduous	Ash	6	X	X	6
1489	Deciduous	Ash	6	X	X	6
1490	Deciduous	Ash	7	X	X	7
1491	Deciduous	Ash	9	X	X	9
1492	Deciduous	Ash	7	X	X	7
1493	Deciduous	Box Elder	12	X	X	12
1494	Deciduous	Ash	6	X	X	6
1495	Coniferous	Spruce	13	X	X	13
1496	Coniferous	Spruce	12	X	X	12
1497	Coniferous	Spruce	14	X	X	14
1498	Deciduous	Box Elder	6	X	X	6
1499	Deciduous	Box Elder	6	X	X	6
1500	Deciduous	Box Elder	6	X	X	6
1501	Deciduous	Maple	6	X	X	6
1502	Deciduous	Box Elder	6	X	X	6
1503	Deciduous	Box Elder	7	X	X	7
1504	Coniferous	Spruce	14	X	X	14
1505	Coniferous	Spruce	16	X	X	16
1506	Deciduous	Box Elder	13	X	X	13
1507	Deciduous	Box Elder	6	X	X	6
1508	Deciduous	Box Elder	8	X	X	8

Point Number	Type	Species	Inches	Significant	Removal	Significant Inches Removed
1509	Deciduous	Box Elder	9	X	X	9
1510	Coniferous	Spruce	14	X	X	14
1511	Coniferous	Spruce	17	X	X	17
1512	Deciduous	Ash	7	X	X	7
1513	Deciduous	Box Elder	7	X	X	7
1514	Deciduous	Box Elder	13	X	X	13
1515	Deciduous	Elm	11	X	X	11
1516	Deciduous	Elm	9	X	X	9
1517	Deciduous	Ash	7	X	X	7
1518	Deciduous	Hackberry	7	X	X	7
1519	Coniferous	Spruce	11	X	X	11
1520	Coniferous	Spruce	11	X	X	11
1521	Deciduous	Box Elder	6	X	X	6
1522	Coniferous	Spruce	11	X	X	11
1523	Coniferous	Spruce	11	X	X	11
1524	Deciduous	Ash	8	X	X	8
1525	Deciduous	Ash	8	X	X	8
1526	Coniferous	Spruce	15	X	X	15
1527	Deciduous	Ash	8	X	X	8
1528	Deciduous	Ash	7	X	X	7
1529	Deciduous	Ash	6	X	X	6
1530	Coniferous	Spruce	13	X	X	13
1531	Coniferous	Spruce	14	X	X	14
1532	Coniferous	Spruce	13	X	X	13
1533	Deciduous	Elm	18	X	X	18
1534	Coniferous	Spruce	20	X	X	20
1535	Deciduous	Ash	11	X	X	11
1536	Deciduous	Box Elder	13	X	X	13
1537	Deciduous	Box Elder	13	X	X	13
1538	Deciduous	Box Elder	13	X	X	13
1539	Deciduous	Box Elder	7	X	X	7
1540	Deciduous	Box Elder	12	X	X	12
1541	Deciduous	Ash	12	X	X	12
1542	Deciduous	Box Elder	10	X	X	10
1543	Deciduous	Box Elder	8	X	X	8
1544	Deciduous	Box Elder	19	X	X	19
1545	Deciduous	Box Elder	7	X	X	7
1546	Deciduous	Box Elder	8	X	X	8
1547	Deciduous	Box Elder	13	X	X	13
1548	Deciduous	Box Elder	10	X	X	10
1549	Deciduous	Box Elder	17	X	X	17
1550	Deciduous	Ash	7	X	X	7
1551	Deciduous	Aspen	6	X	X	6
1552	Deciduous	Aspen	6	X	X	6
1553	Deciduous	Aspen	7	X	X	7
1554	Deciduous	Aspen	6	X	X	6
1555	Deciduous	Aspen	7	X	X	7
1556	Deciduous	Cottonwood	9	X	X	9
1557	Deciduous	Cottonwood	7	X	X	7
1558	Deciduous	Aspen	6	X	X	6
1559	Deciduous	Aspen	6	X	X	6
1560	Deciduous	Aspen	7	X	X	7
1561	Deciduous	Aspen	6	X	X	6
1562	Deciduous	Cottonwood	6	X	X	6
1563	Deciduous	Aspen	7	X	X	7
1564	Deciduous	Aspen	8	X	X	8
1565	Deciduous	Aspen	7	X	X	7
1566	Deciduous	Ash	6	X	X	6
1567	Deciduous	Aspen	7	X	X	7
1568	Deciduous	Aspen	7	X	X	7
1569	Deciduous	Aspen	7	X	X	7
1570	Deciduous	Aspen	7	X	X	7
1571	Deciduous	Aspen	6	X	X	6
1572	Deciduous	Aspen	6	X	X	6
1573	Deciduous	Aspen	6	X	X	6
1574	Deciduous	Aspen	6	X	X	6
1575	Deciduous	Aspen	8	X	X	8
1576	Deciduous	Aspen	8	X	X	8
1577	Deciduous	Aspen	7	X	X	7
1578	Deciduous	Aspen	6	X	X	6
1579	Deciduous	Aspen	7	X	X	7
1580	Deciduous	Aspen	6	X	X	6
1581	Deciduous	Aspen	9	X	X	9
1582	Deciduous	Aspen	10	X	X	10
1583	Deciduous	Aspen	8	X	X	8
1584	Deciduous	Aspen	6	X	X	6
1585	Deciduous	Elm	6	X	X	6
1586	Deciduous	Aspen	6	X	X	6
1587	Deciduous	Aspen	8	X	X	8
1588	Deciduous	Aspen	7	X	X	7
1589	Deciduous	Aspen	7	X	X	7
1590	Deciduous	Aspen	8	X	X	8
1591	Deciduous	Aspen	8	X	X	8
1592	Deciduous	Aspen	7	X	X	7
1593	Deciduous	Aspen	8	X	X	8
1594	Deciduous	Aspen	8	X	X	8
1595	Deciduous	Aspen	9	X	X	9
1596	Deciduous	Aspen	6	X	X	6
1597	Deciduous	Aspen	8	X	X	8
1598	Deciduous	Aspen	6	X	X	6
1599	Deciduous	Aspen	6	X	X	6
1600	Deciduous	Aspen	6	X	X	6
1601	Deciduous	Aspen	6	X	X	6
1602	Deciduous	Aspen	6	X	X	6
1603	Deciduous	Aspen	6	X	X	6
1604	Deciduous	Aspen	7	X	X	7
1605	Deciduous	Aspen	7	X	X	7
1606	Deciduous	Aspen	7	X	X	7
1607	Deciduous	Aspen	7	X	X	7
1608	Deciduous	Aspen	8	X	X	8
1609	Deciduous	Aspen	8	X	X	8
1610	Deciduous	Aspen	8	X	X	8
1611	Deciduous	Cedar	6	X	X	6
1612	Deciduous	Aspen	6	X	X	6
1613	Deciduous	Aspen	7	X	X	7
1614	Deciduous	Aspen	7	X	X	7
1615	Deciduous	Cedar	7	X	X	7
1616	Deciduous	Aspen	6	X	X	6
1617	Deciduous	Aspen	7	X	X	7
1618	Deciduous	Aspen	6	X	X	6
1619	Deciduous	Aspen	7	X	X	7
1620	Deciduous	Aspen	7	X	X	7
1621	Deciduous	Aspen	7	X	X	7
1622	Deciduous	Aspen	8	X	X	8
1623	Deciduous	Aspen	6	X	X	6
1624	Deciduous	Aspen	6	X	X	6
1625	Deciduous	Aspen	9	X	X	9
1626	Deciduous	Aspen	7	X	X	7
1627	Deciduous	Aspen	7	X	X	7
1628	Deciduous	Aspen	8	X	X	8
1629	Deciduous	Aspen	8	X	X	8
1630	Deciduous	Aspen	6	X	X	6
1631	Deciduous	Aspen	6	X	X	6
1632	Deciduous	Aspen	7	X	X	7
1633	Deciduous	Aspen	7	X	X	7
1634	Deciduous	Cottonwood	7	X	X	7
1635	Deciduous	Aspen	12	X	X	12
1636	Deciduous	Cedar	6	X	X	6
1637	Deciduous	Box Elder	11	X	X	11

Point Number	Type	Species	Inches	Significant	Removal	Significant Inches Removed
1638	Deciduous	Box Elder	12	X	X	12
1639	Deciduous	Box Elder	7	X	X	7
1640	Deciduous	Box Elder	16	X	X	16
1641	Deciduous	Box Elder	10	X	X	10
1642	Deciduous	Box Elder	12	X	X	12
1643	Deciduous	Box Elder	12	X	X	12
1644	Deciduous	Box Elder	14	X	X	14
1645	Deciduous	Box Elder	6	X	X	6
1646	Deciduous	Ash	10	X	X	10
1647	Deciduous	Box Elder	10	X	X	10
1648	Deciduous	Box Elder	12	X	X	12
1649	Deciduous	Box Elder	9	X	X	9
1650	Deciduous	Ash	13	X	X	13
1651	Deciduous	Box Elder	8	X	X	8
1652	Deciduous	Ash	10	X	X	10
1653	Deciduous	Ash	10	X	X	10
1654	Deciduous	Box Elder	7	X	X	7
1655	Deciduous	Box Elder	6	X	X	6
1656	Deciduous	Ash	9	X	X	9
1657	Deciduous	Box Elder	8	X	X	8
1658	Deciduous	Ash	9	X	X	9
1659	Deciduous	Ash	8	X	X	8
1660	Deciduous	Ash	6	X	X	6
1661	Deciduous	Ash	7	X	X	7
1666	Coniferous	Red Pine	13	X	X	13
1667	Coniferous	Red Pine	14	X	X	14
1668	Deciduous	Box Elder	12	X	X	12
1669	Deciduous	Cedar	11	X	X	11
1670	Deciduous	Cedar	11	X	X	11
1671	Deciduous	Cherry	8	X	X	8
1672	Deciduous	Ash	13	X	X	13
1673	Deciduous	Ash	6	X	X	6
1674	Deciduous	Cedar	6	X	X	6
1675	Deciduous	Cedar	6	X	X	6
1676	Deciduous	Ash	6	X	X	6
1677	Deciduous	Cedar	11	X	X	11
1678	Deciduous	Ash	8	X	X	8
1679	Deciduous	Cedar	9	X	X	9
1680	Deciduous	Ash	6	X	X	6
1681	Deciduous	Ash	6	X	X	6
1682	Deciduous	Cedar	7	X	X	7
1683	Deciduous	Cedar	8	X	X	8
1684	Deciduous	Cedar	6	X	X	6
1685	Deciduous	Cedar	8	X	X	8
1686	Deciduous	Ash	6	X	X	6
1687	Deciduous	Cedar	6	X	X	6
1688	Deciduous	Cedar	12	X	X	12
1689	Deciduous	Cedar	12	X	X	12
1690	Deciduous	Ash	8	X	X	8
1691	Deciduous	Cedar	13	X	X	13
1692	Deciduous	Ash	10	X	X	10
1693	Deciduous	Cedar	8	X	X	8
1694	Deciduous	Cherry	7	X	X	7
1695	Coniferous	Red Pine	13	X	X	13
1696	Coniferous	Red Pine	14	X	X	14
1697	Coniferous	Red Pine	13	X	X	13
1698	Coniferous	Red Pine	11	X	X	11
1699	Deciduous	Maple	13	X	X	13
1700	Deciduous	Maple	12	X	X	12
1701	Deciduous	Crab Apple	13	X	X	13
1702	Deciduous	Aspen	6	X	X	6
1703	Deciduous	Aspen	6	X	X	6
1704	Deciduous	Aspen	6	X	X	6
1705	Deciduous	Aspen	6	X	X	6
1706	Deciduous	Apple	13	X	X	13
1707	Deciduous	Maple	7	Steep Slope/Buffer		
1708	Deciduous	Maple	8	Steep Slope/Buffer		
1709	Deciduous	Oak	18	Steep Slope/Buffer		
1710	Deciduous	Oak	7	Steep Slope/Buffer		
1711	Deciduous	Maple	8	Steep Slope/Buffer		
1712	Deciduous	Maple	9	Steep Slope/Buffer		
1713	Deciduous	Maple	8	Steep Slope/Buffer		
1714	Deciduous	Maple	6	Steep Slope/Buffer		
1715	Deciduous	Maple	9	Steep Slope/Buffer		
1716	Deciduous	Oak	7	Steep Slope/Buffer		
1717	Deciduous	Maple	6	Steep Slope/Buffer		
1718	Deciduous	Oak	24	Steep Slope/Buffer		
1719	Deciduous	Oak	19	Steep Slope/Buffer		
1720	Deciduous	Oak	21	Steep Slope/Buffer		
1721	Deciduous	Ironwood	8	Steep Slope/Buffer		
1722	Deciduous	Maple	6	Steep Slope/Buffer		
1723	Deciduous	Maple	8	Steep Slope/Buffer		
1724	Deciduous	Oak	19	Steep Slope/Buffer		
1725	Deciduous	Oak	8	Steep Slope/Buffer		
1726	Deciduous	Ash	13	X		
1727	Deciduous	Ash	13	X		
1728	Deciduous	Maple	16	X		
1729	Deciduous	Elm	9	X	X	9
1730	Deciduous	Elm	8	X	X	8
1731	Deciduous	Ash	7	X	X	7
1732	Deciduous	Box Elder	13	X	X	13
1733	Deciduous	Elm	12	X	X	12
1734	Deciduous	Box Elder	14	X	X	14
1735	Deciduous	Oak	14	X		
1736	Deciduous	Ash	11	X		
1737	Deciduous	Elm	14	X	X	14
1738	Deciduous	Oak	19	X		
1739	Deciduous	Ash	15	X		
1740	Deciduous	Maple	8	X		
1741	Deciduous	Maple	10	X		
1742	Deciduous	Basswood	13	Steep Slope/Buffer		
1743	Deciduous	Basswood	15	Steep Slope/Buffer		
1744	Deciduous	Oak	29	Steep Slope/Buffer		
1745	Deciduous	Maple	23	Steep Slope/Buffer		
1746	Deciduous	Maple	18	Steep Slope/Buffer		
1747	Deciduous	Maple	9	Steep Slope/Buffer		
1748	Deciduous	Maple	19	Steep Slope/Buffer		
1749	Deciduous	Maple	20	Steep Slope/Buffer		
1750	Deciduous	Basswood	6	Steep Slope/Buffer		
1751	Deciduous	Maple	8	Steep Slope/Buffer		
1752	Deciduous	Elm	10	Steep Slope/Buffer		
1753	Deciduous	Basswood	10	Steep Slope/Buffer		
1754	Deciduous	Elm	12	Steep Slope/Buffer		
1755	Deciduous	Maple	16	Steep Slope/Buffer		
1756	Deciduous	Maple	12	Steep Slope/Buffer		
1757	Deciduous	Maple	14	Steep Slope/Buffer		
1758	Deciduous	Basswood	16	Steep Slope/Buffer		
1759	Deciduous	Maple	15	Steep Slope/Buffer		
1760	Deciduous	Basswood	22	Steep Slope/Buffer		
1761	Deciduous	Maple	6	Steep Slope/Buffer		
1762	Deciduous	Box Elder	9	Steep Slope/Buffer		
1763	Deciduous	Maple	12	Steep Slope/Buffer		
1764	Deciduous	Basswood	8	Steep Slope/Buffer		
1765	Deciduous	Box Elder	8	Steep Slope/Buffer		
1766	Deciduous	Basswood	16	Steep Slope/Buffer		
1767	Deciduous	Elm	6	Steep Slope/Buffer		
1768	Deciduous	Elm	10	Steep Slope/Buffer		
1769	Deciduous	Basswood	8	Steep Slope/Buffer		
1770	Deciduous	Elm	7	Steep Slope/Buffer		

ALLIANT
733 Marquette Avenue
Suite 700
Minneapolis, MN 55402
612.758.3080
www.alliant-inc.com

OAK RIDGE COMMONS
PLANNED UNIT DEVELOPMENT SUBMITTAL
HWY 41 & PEAVEY ROAD
CHASKA, MN

TREE INVENTORY

I hereby certify that this plan, specification, or report was prepared by me or under my direct supervision and that I am a duly Licensed LANDSC

Point Number	Type	Species	Inches	Significant	Removal	Significant Inches Removed
1771	Deciduous	Oak	12	Steep Slope/Buffer		
1772	Deciduous	Elm	8	Steep Slope/Buffer		
1773	Deciduous	Basswood	15	Steep Slope/Buffer		
1774	Deciduous	Maple	9	Steep Slope/Buffer		
1775	Deciduous	Box Elder	12	Steep Slope/Buffer		
1776	Deciduous	Maple	10	Steep Slope/Buffer		
1777	Deciduous	Oak	11	Steep Slope/Buffer		
1778	Deciduous	Elm	6	Steep Slope/Buffer		
1779	Deciduous	Basswood	17	Steep Slope/Buffer		
1780	Deciduous	Basswood	17	Steep Slope/Buffer		
1781	Deciduous	Basswood	15	Steep Slope/Buffer		
1782	Deciduous	Basswood	18	Steep Slope/Buffer		
1783	Deciduous	Box Elder	9	Steep Slope/Buffer		
1784	Deciduous	Box Elder	9	Steep Slope/Buffer		
1785	Deciduous	Elm	18	Steep Slope/Buffer		
1786	Deciduous	Elm	6	Steep Slope/Buffer		
1787	Deciduous	Box Elder	9	Steep Slope/Buffer		
1788	Deciduous	Maple	6	Steep Slope/Buffer		
1789	Deciduous	Basswood	9	Steep Slope/Buffer		
1790	Deciduous	Basswood	9	Steep Slope/Buffer		
1791	Deciduous	Basswood	11	Steep Slope/Buffer		
1792	Deciduous	Basswood	23	Steep Slope/Buffer		
1793	Deciduous	Elm	8	Steep Slope/Buffer		
1794	Deciduous	Maple	6	Steep Slope/Buffer		
1795	Deciduous	Maple	9	Steep Slope/Buffer		
1796	Deciduous	Maple	8	Steep Slope/Buffer		
1797	Deciduous	Maple	7	Steep Slope/Buffer		
1798	Deciduous	Box Elder	10	Steep Slope/Buffer		
1799	Deciduous	Basswood	22	Steep Slope/Buffer		
1800	Deciduous	Box Elder	8	Steep Slope/Buffer		
1801	Deciduous	Elm	6	Steep Slope/Buffer		
1802	Deciduous	Box Elder	6	Steep Slope/Buffer		
1803	Deciduous	Maple	6	Steep Slope/Buffer		
1804	Deciduous	Elm	6	Steep Slope/Buffer		
1805	Deciduous	Oak	9	Steep Slope/Buffer		
1806	Deciduous	Basswood	18	Steep Slope/Buffer		
1807	Deciduous	Basswood	14	Steep Slope/Buffer		
1808	Deciduous	Oak	13	Steep Slope/Buffer		
1809	Deciduous	Basswood	16	Steep Slope/Buffer		
1810	Deciduous	Basswood	18	Steep Slope/Buffer		
1811	Deciduous	Oak	14	Steep Slope/Buffer		
1812	Deciduous	Basswood	10	Steep Slope/Buffer		
1813	Deciduous	Oak	13	Steep Slope/Buffer		
1814	Deciduous	Basswood	15	Steep Slope/Buffer		
1815	Deciduous	Basswood	21	Steep Slope/Buffer		
1816	Deciduous	Basswood	6	Steep Slope/Buffer		
1817	Deciduous	Basswood	14	Steep Slope/Buffer		
1818	Deciduous	Basswood	13	Steep Slope/Buffer		
1819	Deciduous	Basswood	6	Steep Slope/Buffer		
1820	Deciduous	Ash	14	Steep Slope/Buffer		
1821	Deciduous	Basswood	10	Steep Slope/Buffer		
1822	Deciduous	Basswood	13	Steep Slope/Buffer		
1823	Deciduous	Basswood	11	Steep Slope/Buffer		
1824	Deciduous	Basswood	12	X		
1825	Deciduous	Ash	12	X		
1826	Deciduous	Basswood	8	X		
1827	Deciduous	Maple	8	X		
1828	Deciduous	Cherry	9	X		
1829	Deciduous	Basswood	8	X		
1830	Deciduous	Oak	15	Steep Slope/Buffer		
1831	Deciduous	Oak	7	Steep Slope/Buffer		
1832	Deciduous	Basswood	12	Steep Slope/Buffer		
1833	Deciduous	Ash	11	Steep Slope/Buffer		
1834	Deciduous	Oak	12	Steep Slope/Buffer		
1835	Deciduous	Basswood	9	Steep Slope/Buffer		
1836	Deciduous	Oak	13	Steep Slope/Buffer		
1837	Deciduous	Basswood	8	Steep Slope/Buffer		
1838	Deciduous	Basswood	14	Steep Slope/Buffer		
1839	Deciduous	Basswood	7	Steep Slope/Buffer		
1840	Deciduous	Basswood	11	Steep Slope/Buffer		
1841	Deciduous	Basswood	9	Steep Slope/Buffer		
1842	Deciduous	Ash	13	Steep Slope/Buffer		
1843	Deciduous	Oak	14	Steep Slope/Buffer		
1844	Deciduous	Basswood	8	Steep Slope/Buffer		
1845	Deciduous	Basswood	12	Steep Slope/Buffer		
1846	Deciduous	Oak	16	X		
1847	Deciduous	Elm	11	X		
1848	Deciduous	Basswood	8	X		
1849	Deciduous	Oak	10	X		
1850	Deciduous	Ash	7	X		
1851	Deciduous	Cherry	10	X		
1852	Deciduous	Cherry	9	X		
1853	Deciduous	Ash	9	X		
1854	Deciduous	Basswood	14	X		
1855	Deciduous	Basswood	8	X		
1856	Deciduous	Ash	8	X		
1857	Deciduous	Oak	13	X		
1858	Deciduous	Ash	13	X		
1859	Deciduous	Basswood	11	X		
1860	Deciduous	Beech	7	X		
1861	Deciduous	Ash	8	X		
1862	Deciduous	Basswood	12	Steep Slope/Buffer		
1863	Deciduous	Oak	14	Steep Slope/Buffer		
1864	Deciduous	Oak	10	Steep Slope/Buffer		
1865	Deciduous	Oak	13	X		
1866	Deciduous	Basswood	7	X		
1867	Deciduous	Oak	9	X		
1868	Deciduous	Oak	7	X		
1869	Deciduous	Basswood	12	X		
1870	Deciduous	Basswood	7	Steep Slope/Buffer		
1871	Deciduous	Basswood	6	Steep Slope/Buffer		
1872	Deciduous	Basswood	7	Steep Slope/Buffer		
1873	Deciduous	Ash	6	Steep Slope/Buffer		
1874	Deciduous	Box Elder	8	Steep Slope/Buffer		
1875	Deciduous	Oak	8	Steep Slope/Buffer		
1876	Deciduous	Aspen	16	Steep Slope/Buffer		
1877	Deciduous	Box Elder	6	Steep Slope/Buffer		
1878	Deciduous	Oak	9	Steep Slope/Buffer		
1879	Deciduous	Beech	6	Steep Slope/Buffer		
1880	Deciduous	Beech	6	Steep Slope/Buffer		
1881	Deciduous	Cherry	8	Steep Slope/Buffer		
1882	Deciduous	Box Elder	7	Steep Slope/Buffer		
1883	Deciduous	Oak	23	Steep Slope/Buffer		
1884	Deciduous	Box Elder	14	Steep Slope/Buffer		
1885	Deciduous	Box Elder	14	Steep Slope/Buffer		
1886	Deciduous	Ash	10	Steep Slope/Buffer		
1887	Deciduous	Ash	14	Steep Slope/Buffer		
1888	Deciduous	Ash	7	Steep Slope/Buffer		
1889	Deciduous	Maple	9	Steep Slope/Buffer		
1890	Deciduous	Ash	13	Steep Slope/Buffer		
1891	Deciduous	Box Elder	13	Steep Slope/Buffer		
1892	Deciduous	Box Elder	14	Steep Slope/Buffer		
1893	Deciduous	Box Elder	8	Steep Slope/Buffer		
1894	Deciduous	Box Elder	7	Steep Slope/Buffer		
1895	Deciduous	Box Elder	7	Steep Slope/Buffer		
1896	Deciduous	Box Elder	8	Steep Slope/Buffer		
1897	Deciduous	Box Elder	10	Steep Slope/Buffer		
1898	Deciduous	Box Elder	8	Steep Slope/Buffer		
1899	Deciduous	Ash	11	Steep Slope/Buffer		

Point Number	Type	Species	Inches	Significant	Removal	Significant Inches Removed
1901	Deciduous	Basswood	17	Steep Slope/Buffer		
1902	Deciduous	Ash	13	Steep Slope/Buffer		
1903	Deciduous	Box Elder	12	Steep Slope/Buffer		
1904	Deciduous	Basswood	27	Steep Slope/Buffer		
1905	Deciduous	Basswood	11	Steep Slope/Buffer		
1906	Deciduous	Ash	6	X	X	6
1907	Deciduous	Ash	10	X	X	10
1908	Deciduous	Ash	17	X	X	17
1909	Deciduous	Ash	15	X	X	15
1910	Deciduous	Basswood	6	X	X	6
1911	Deciduous	Beech	6	X		
1912	Deciduous	Cherry	9	X	X	9
1913	Deciduous	Basswood	6	X	X	6
1914	Deciduous	Oak	8	X	X	8
31345	Deciduous	Basswood	16	X		
31346	Coniferous	Spruce	12	X	X	12
31347	Coniferous	Spruce	12	X	X	12
31348	Coniferous	Spruce	14	X	X	14
31349	Coniferous	Spruce	14	X	X	14
31350	Deciduous	Basswood	12	X	X	12
31351	Coniferous	Spruce	12	X	X	12
31352	Coniferous	Spruce	12	X	X	12
31353	Coniferous	Spruce	12	X	X	12
31354	Coniferous	Spruce	14	X	X	14
31355	Deciduous	Basswood	10	X		
31356	Deciduous	Basswood	14	X		
31358	Deciduous	Basswood	12	X	X	12
31359	Deciduous	Basswood	12	X	X	12
31361	Deciduous	Basswood	18	X	X	18
31362	Deciduous	Basswood	10	X	X	10
31364	Deciduous	Basswood	12	X	X	12
31365	Deciduous	Basswood	10	X	X	10
31367	Deciduous	Basswood	14	X	X	14
31368	Deciduous	Basswood	12	X	X	12
31370	Deciduous	Basswood	14	X	X	14
31371	Deciduous	Basswood	14	X	X	14
31373	Deciduous	Basswood	12	X	X	12
31375	Deciduous	Basswood	12	X	X	12
31377	Deciduous	Basswood	12	X	X	12
31379	Deciduous	Basswood	12	X	X	12
31380	Deciduous	Basswood	12	X	X	12
31381	Deciduous	Basswood	12	X	X	12
31382	Deciduous	n/a	8	X	X	8
31383	Deciduous	Maple	8	X	X	8
31384	Coniferous	Spruce	8	X	X	8
31385	Deciduous	Basswood	14	X	X	14
31386	Deciduous	Basswood	10	X	X	10
31388	Deciduous	Basswood	16	X		
31389	Deciduous	Basswood	20	X		
31390	Deciduous	Ash	12	X		
31391	Deciduous	Basswood	12	X		
31392	Deciduous	Basswood	12	X		
31393	Deciduous	Basswood	20	X	X	20
31405	Coniferous	Spruce	12	X	X	12
31406	Coniferous	Spruce	14	X		
31407	Coniferous	Spruce	10	X		
31408	Coniferous	Spruce	12	X		
31409	Coniferous	Spruce	12	X	X	12
31410	Deciduous	Basswood	14	X		
31411	Coniferous	Spruce	12	X	X	12
31412	Deciduous	Ash	12	X	X	12
31413	Coniferous	Spruce	8	X	X	8
31503	Deciduous	Basswood	14	X		
31504	Coniferous	Spruce	12	X	X	12
31505	Coniferous	Spruce	8	X	X	8
31507	Coniferous	Spruce	6	X	X	6
31508	Coniferous	Spruce	10	X	X	10
31509	Coniferous	Spruce	10	X	X	10
31510	Coniferous	Spruce	10	X	X	10
31511	Deciduous	Ash	10	X	X	10
31512	Deciduous	Ash	10	X	X	10
31513	Deciduous	Ash	10	X	X	10
31514	Coniferous	Spruce	8	X	X	8
31515	Coniferous	Spruce	8	X	X	8
31516	Coniferous	Spruce	12	X	X	12
31517	Coniferous	Spruce	8	X	X	8
31523	Deciduous	Ash	14	X	X	14
31524	Deciduous	Crab Apple	10	X	X	10
31525	Deciduous	Crab Apple	8	X	X	8
31526	Coniferous	Spruce	10	X	X	10
31527	Coniferous	Spruce	10	X	X	10
31528	Coniferous	Spruce	10	X	X	10
31529	Deciduous	Ash	12	X	X	12
31530	Deciduous	Ash	12	X	X	12
31531	Deciduous	Ash	12	X	X	12
31569	Coniferous	Spruce	10	X	X	10
31647	Deciduous	Basswood	16	X		
31696	Coniferous	Spruce	14	X		
31697	Coniferous	Spruce	14	X		
31698	Coniferous	Spruce	8	X		
31771	Coniferous	Spruce	14	X	X	14
31772	Coniferous	Spruce	14	X	X	14
31773	Coniferous	Spruce	14	X	X	14
31804	Coniferous	Spruce	14	X	X	14
31805	Coniferous	Spruce	14	X	X	14
31806	Coniferous	Spruce	14	X	X	14
31807	Coniferous	Spruce	14	X	X	14
31808	Coniferous	Spruce	12	X	X	12
31809	Coniferous	Spruce	14	X	X	14
31810	Coniferous	Spruce	14	X	X	14
31811	Coniferous	Spruce	14	X	X	14
31812	Coniferous	Spruce	14	X	X	14
31813	Coniferous	Spruce	14	X	X	14
31814	Coniferous	Spruce	14	X	X	14
31815	Coniferous	Spruce	12	X	X	12
31897	Deciduous	Basswood	12	X		
31900	Deciduous	Basswood	12	X	X	12
31908	Deciduous	Basswood	14	X		
31936	Coniferous	Spruce	10	X	X	10
31937	Coniferous	Spruce	10	X	X	10
31938	Coniferous	Spruce	12	X	X	12
31939	Coniferous	Spruce	12	X	X	12
31940	Coniferous	Spruce	10	X	X	10
31941	Coniferous	Spruce	10	X		
31942	Coniferous	Spruce	14	X	X	14
31943	Coniferous	Spruce	10	X	X	10
31944	Coniferous	Spruce	14	X		
31945	Coniferous	Spruce	14	X		
31946	Coniferous	Spruce	16	X		
32089	Coniferous	Spruce	10	X	X	10
32301	Coniferous	Spruce	4		X	
32302	Coniferous	Spruce	4		X	
32303	Coniferous	Spruce	4		X	
32304	Coniferous	Spruce	4		X	
32305	Coniferous	Spruce	4		X	
32306	Coniferous	Spruce	4		X	
32460	Deciduous	Maple	8	X		
32463	Deciduous	Maple	8	X		
32466	Deciduous	Maple	10	X		

Point Number	Type	Species	Inches	Significant	Removal	Significant Inches Removed
32469	Deciduous	Maple	10	X		
33124	Deciduous	Ash	12	X		
33125	Deciduous	Ash	12	X		
33126	Deciduous	Ash	12	X		
33127	Deciduous	Ash	12	X		
90001	Coniferous	Spruce	14	X	X	14
90002	Coniferous	Spruce	14	X		
90003	Coniferous	Spruce	14	X		
90004	Coniferous	Spruce	14	X		
90005	Coniferous	Spruce	14	X		
90006	Deciduous	Elm	12	X		
90022	Deciduous	Elm	14	X		
90028	Deciduous	Elm	12	X		
90038	Deciduous	Elm	12	X		
90108	Deciduous	Crab Apple	8	X		
90109	Deciduous	Crab Apple	8	X		
90244	Deciduous	Crab Apple	8	X		
90245	Deciduous	Crab Apple	8	X		
90405	Deciduous	Crab Apple	8	X		
90406	Deciduous	Crab Apple	8	X		
90407	Deciduous	Crab Apple	8	X		
90536	Deciduous	Crab Apple	8	X		
90681	Deciduous	Hackberry	12	X		
95586	Deciduous	Maple	6	X	X	6
95587	Deciduous	Birch	12	X	X	12
95588	Deciduous	Fruit	12	X	X	12
95589	Deciduous	Maple	10	X	X	10
95590	Deciduous	Ash	16	X	X	16
95591	Deciduous	Maple	10	X	X	10
95592	Deciduous	Aspen	12	X	X	12
95593	Deciduous	Maple	14	X	X	14
95594	Deciduous	Ash	9	X	X	9
95595	Deciduous	Maple	14	X	X	14
95596	Deciduous	Ash	14	X	X	14
95597	Deciduous	Maple	18	X	X	18
905505	Deciduous	Locust	16	X	X	16
905506	Deciduous	Ash	18	X	X	18
905507	Deciduous	Ash	12	X	X	12
905508	Deciduous	Ash	24	X	X	24
905509	Deciduous	Basswood	18	X	X	18
905510	Coniferous	Spruce	10	X	X	10
905511	Deciduous	Basswood	18	X	X	18
905512	Deciduous	Crab Apple	12	X	X	12
905513	Deciduous	Crab Apple	10	X	X	10
905514	Deciduous	Crab Apple	10	X	X	10
905515	Deciduous	Oak	16	X	X	16
905516	Deciduous	Maple	10	X	X	10
905517	Deciduous	Maple	8	X	X	8
905518	Deciduous	Basswood	16	X	X	16
905519	Deciduous	Ash	16	X	X	16
905520	Deciduous	Birch	12	X	X	12
905521	Deciduous	Birch	12	X	X	12
905522	Deciduous	Ash	16	X	X	16
905523	Deciduous	Ash	16	X	X	16
905524	Deciduous	Maple	10	X	X	10
905525	Deciduous	Honey Locust	18	X	X	18
905526	Deciduous	Maple	16	X	X	16
905527	Deciduous	Maple	12	X	X	12
905528	Deciduous	Apple	12	X	X	12
905529	Deciduous	Apple	12	X	X	12
905530	Deciduous	Ash	10	X	X	10
905531	Deciduous	Ash	12	X	X	12
905532	Deciduous	Maple	10	X	X	10
905533	Deciduous	Maple	12	X	X	12
905534	Deciduous	Ash	14	X		
905535	Deciduous	Crab Apple	12	X	X	12
905536	Deciduous	Ash	14	X		
905537	Deciduous	Cottonwood	20	X		
905538	Deciduous	Ash	14	X	X	14
905539	Deciduous	Ash	14	X	X	14
905540	Deciduous	Maple	6	X	X	6
905541	Deciduous	Maple	8	X	X	8
905542	Coniferous	Spruce	6	X		
905545	Deciduous	Maple	20	X	X	20
905546	Coniferous	Spruce	14	X	X	14
905547	Deciduous	Ash	16	X	X	16
905548	Deciduous	Basswood	16	X	X	16
905549	Coniferous	Spruce	14	X	X	14
905550	Deciduous	Basswood	12	X	X	12
905551	Deciduous	Basswood	12	X	X	12
905552	Deciduous	Basswood	12	X	X	12
905553	Deciduous	Ash	18	X	X	18
905554	Coniferous	Spruce	20	X	X	20
905555	Coniferous	Spruce	16	X	X	16
905556	Deciduous	Basswood	14	X	X	14
905557	Deciduous	Maple	16	X	X	16
905558	Coniferous	Spruce	14	X	X	14
905559	Coniferous	Spruce	20	X	X	20
905560	Deciduous	Crab Apple	10	X	X	10
905561	Coniferous	Spruce	14	X	X	14
905562	Coniferous	Spruce	14	X	X	14
905563	Coniferous	Spruce	16	X	X	16
905564	Deciduous	Ash	14	X	X	14
905565	Deciduous	Elm	14	X	X	14
905566	Deciduous	Elm	14	X	X	14
905567	Deciduous	Elm	12	X	X	12
905568	Deciduous	Elm	14	X	X	14
905571	Deciduous	Elm	14	X	X	14
905572	Deciduous	Elm	12	X	X	12
905573	Deciduous	Elm	12	X	X	12
905574	Deciduous	Elm	14	X	X	14
905575	Deciduous	Elm	14	X	X	14
905576	Deciduous	Elm	11	X	X	11
905577	Deciduous	Elm	12	X	X	12
905578	Coniferous	Spruce	12	X	X	12
905579	Deciduous	Maple	6	X	X	6
905580	Deciduous	Basswood	16	X	X	16
905581	Deciduous	Elm	14	X	X	14
905582	Deciduous	Basswood	14	X	X	14
905583	Deciduous	Basswood	12	X	X	12
905584	Deciduous	Birch	10	X	X	10
905585	Deciduous	Maple	10	X	X	10
905586	Deciduous	Birch	10	X	X	10
905587	Coniferous	Spruce	12	X	X	12
905588	Coniferous	Spruce	10	X	X	10
905589	Deciduous	Maple	14	X	X	14
905590	Coniferous	Spruce	18	X	X	18
905591	Coniferous	Spruce	8	X	X	8
905592	Coniferous	Spruce	6	X	X	6
905593	Coniferous	Spruce	10	X	X	10
905594	Coniferous	Spruce	10	X	X	10
905595	Coniferous	Spruce	12	X	X	12
905596	Deciduous	Crab Apple	10	X	X	10
905597	Coniferous	Spruce	14	X	X	14
905598	Coniferous	Spruce	14	X	X	14
905599	Coniferous	Spruce	18	X	X	18
905600	Coniferous	Spruce	16	X	X	16
9055430	Deciduous	Birch	4	X		
9055440	Deciduous	Birch	6	X		

Point Number	Type	Species	Inches	Significant	Removal	Significant Inches Removed
9055450	Deciduous	Birch	6	X		
9055460	Deciduous	Birch	6	X		
9055470	Deciduous	Birch	6	X		
9055480	Deciduous	Birch	6	X		
9055490	Deciduous	Birch	6	X		
9055500	Deciduous	Birch	6	X		

DEFINITIONS:

PER CITY CODE SECTION 15.28.070 E. 3.

SIGNIFICANT TREES:

CONIFEROUS: 12 FEET OR MORE IN HEIGHT
OVERSTORY DECIDUOUS: 10 INCHES OR MORE
UNDERSTORY DECIDUOUS: 6 INCHES OR MORE

EXISTING TREE CREDIT

EXISTING TREE CREDIT:
TOTAL SIGNIFICANT CALIPER INCHES SURVEYED: 7,572 INCHES
TOTAL SIGNIFICANT CALIPER INCHES REMOVED: 6,486 INCHES
TOTAL SIGNIFICANT CALIPER INCHES PRESERVED: 1,086 INCHES PRESERVED

PRESERVED TREES LOCATED & MEASURED
DURING SITE VISIT ON 4-10-22: +731 INCHES COUNTED AND PRESERVED

TOTAL PRESERVED CALIPER INCHES: 1,817 CALIPER INCHES PRESERVED

NOTES:
- TREES IN STEEP SLOPES AND 30' BUFFER EXCLUDED FROM CALCULATIONS
- SEE LANDSCAPE PLAN FOR LANDSCAPING REQUIREMENTS AND PROPOSED PLANTINGS

ALLIANT
733 Marquette Avenue
Suite 700
Minneapolis, MN 55402
612.758.3080
www.alliant-inc.com

OAK RIDGE COMMONS
PLANNED UNIT DEVELOPMENT SUBMITTAL
HWY 41 & PEAVEY ROAD
CHASKA, MN

TREE INVENTORY

I hereby certify that this plan, specification, or report was prepared by me or under my direct supervision and that I am a duly Licensed LANDSCAPE ARCHITECT under the laws of the State of MINNESOTA

MARK KRONBECK PLA, ASLA

4-25-22 Date | 26222 License No.

QUALITY ASSURANCE/CONTROL

BY DATE

DATE	ISSUE
9-7-21	PUD RESUBMITTAL
9-30-21	PROGRESS
10-11-21	PUD RESUBMITTAL
10-22-21	CITY COMMENTS
10-26-21	CITY COMMENTS
11-17-21	CCWMO RESUBMITTAL
11-17-21	BID SET
1-10-22	SIGNAGE UPDATE
2-1-22	PUD RESUBMITTAL
3-15-22	LANDSCAPE PLAN UPDATE
3-28-22	CONSTRUCTION DOCUMENTS
4-25-22	CITY & COUNTY COMMENTS

PROJECT TEAM DATA

DESIGNED: MK
DRAWN: MLS
PROJECT NO: 221-0004

L-1.5

Drawing name: X:\2021\210004\plan sheets\210004tree.dwg Apr 25, 2022 - 5:37pm

EXISTING TREE CREDIT

PRESERVED CALIPER INCHES: 1,086 (SEE TREE PRESERVATION AND REMOVAL PLAN)

LANDSCAPE REQUIREMENTS - OVERALL SUMMARY

LANDSCAPE REQUIREMENTS:
TOTAL CALIPER INCHES OF OVERSTORY TREES REQUIRED = THE TOTAL GROSS SQUARE FOOTAGE OF ALL FLOORS DIVIDED BY 320

HOTEL AND CONVENTION CENTER PROPERTY (171,000 S.F. / 320):

REQUIRED: 534 INCHES

PROVIDED: 1,381 INCHES PROVIDED
+ 381.5 INCHES PROPOSED (INCLUDES PROPOSED EVERGREEN TREES)
+ 999.5 INCHES PRESERVED

COSTCO PROPERTY (328,970 S.F. / 320):

REQUIRED: 1,028 INCHES

PROPOSED: 725 INCHES PROVIDED

CONTINENTAL PROPERTY (336,000 S.F. / 320):

REQUIRED: 1,050 INCHES

PROVIDED: 712 INCHES PROVIDED
+731 INCHES PRESERVED

1,443 INCHES PROVIDED ON LOT THREE

TOTAL CALIPER INCHES REQUIRED = 2,612 INCHES REQUIRED
TOTAL CALIPER INCHES PROVIDED = 3,549 INCHES PROVIDED (INCLUDES PROPOSED EVERGREEN TREES)

(SEE SITE LEVEL LANDSCAPE PLANS FOR SPECIFICS)

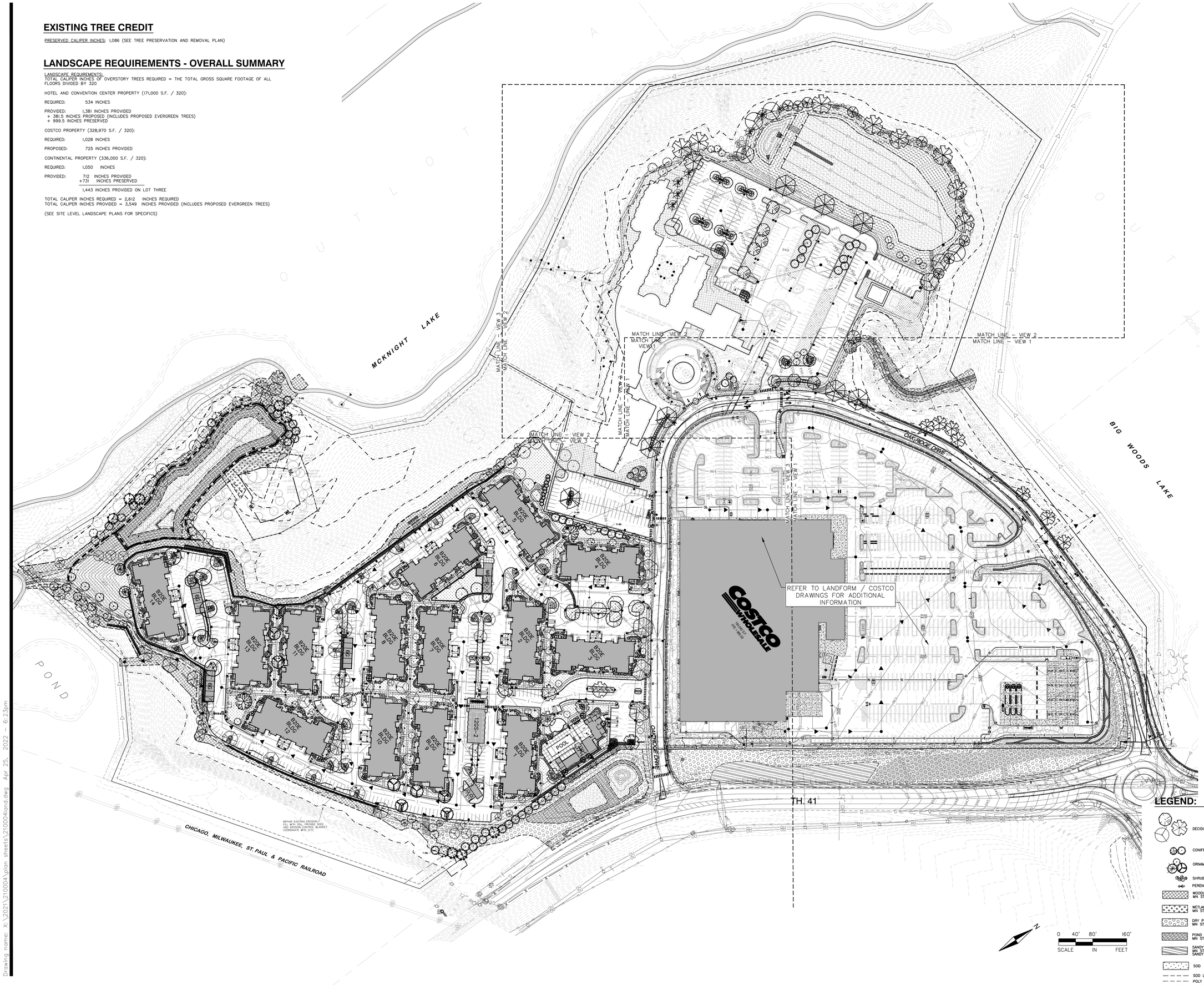

LEGEND:

- DECIDUOUS OVERSTORY TREES
- CONIFEROUS TREES
- ORNAMENTAL TREES
- SHRUBS
- PERENNIALS
- WOODLAND EDGE SOUTH AND WEST SEED MIX MN STATE 36-211 SEED MIX
- WETLAND REHABILITATION SEED MIX MN STATE 34-171 SEED MIX
- DRY PRAIRIE SOUTHEAST MIX MN STATE 35-261 SEED MIX
- POND SIDE SLOPE SEED MIX MN STATE 35-241 MESIC PRAIRIE SEED MIX
- SANDY GENERAL ROADSIDE SEED MIX MN STATE 25-121 SANDY GENERAL ROADSIDE SEED MIX
- SOD
- SOD LIMITS
- POLY EDGING
- LANDSCAPING LIMITS

ALLIANT
733 Marquette Avenue
Suite 700
Minneapolis, MN 55402
612.758.3080
www.alliant-inc.com

OAK RIDGE COMMONS
PLANNED UNIT DEVELOPMENT SUBMITTAL
HWY 41 & PEAVEY ROAD
CHASKA, MN

OVERALL LANDSCAPE PLAN

I hereby certify that this plan, specification, or report was prepared by me or under my direct supervision and that I am a duly Licensed LANDSCAPE ARCHITECT under the laws of the State of MINNESOTA

MARK KRONBECK PLA, ASLA

4-25-22 26222
Date License No.

QUALITY ASSURANCE/CONTROL

BY DATE

DATE	ISSUE
9-7-21	PUD RESUBMITTAL
9-30-21	PROGRESS
10-11-21	PUD RESUBMITTAL
10-22-21	CITY COMMENTS
10-26-21	CITY COMMENTS
11-17-21	CCWMO RESUBMITTAL
11-17-21	BID SET
1-10-22	SIGNAGE UPDATE
2-1-22	PUD RESUBMITTAL
3-15-22	LANDSCAPE PLAN UPDATE
3-28-22	CONSTRUCTION DOCUMENTS
4-25-22	CITY & COUNTY COMMENTS

PROJECT TEAM DATA
DESIGNED: MK
DRAWN: MLS
PROJECT NO: 221-0004

L-2.0

Drawing name: X:\2021\210004\plan sheets\210004land.dwg Apr 25, 2022 - 6:23pm

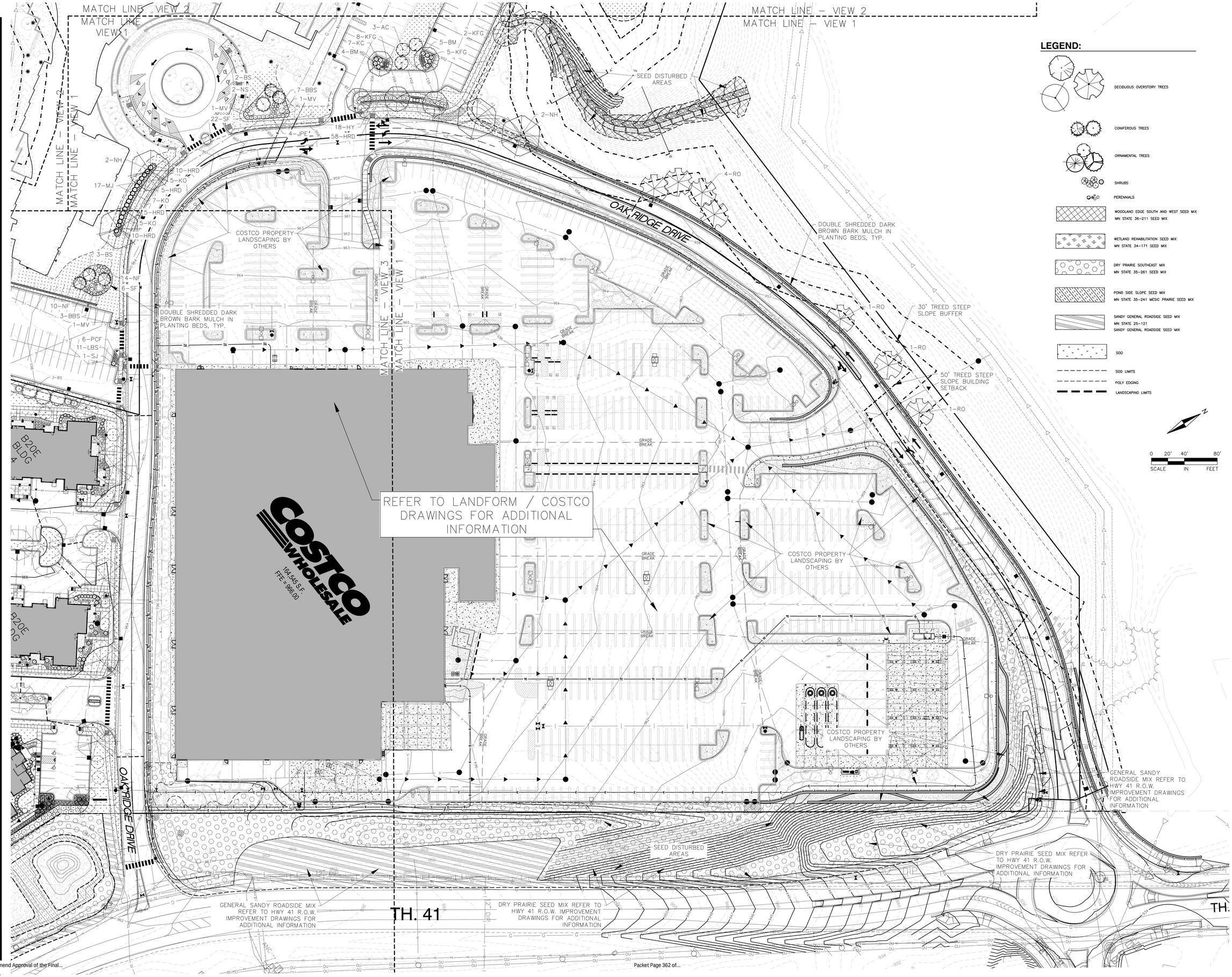

LEGEND:

- DECIDUOUS OVERSTORY TREES
- CONIFEROUS TREES
- ORNAMENTAL TREES
- SHRUBS
- PERENNIALS
- WOODLAND EDGE SOUTH AND WEST SEED MIX — MN STATE 36–211 SEED MIX
- WETLAND REHABILITATION SEED MIX — MN STATE 34–171 SEED MIX
- DRY PRAIRIE SOUTHEAST MIX — MN STATE 35–261 SEED MIX
- POND SIDE SLOPE SEED MIX — MN STATE 35–241 MESIC PRAIRIE SEED MIX
- SANDY GENERAL ROADSIDE SEED MIX — MN STATE 25–121 SANDY GENERAL ROADSIDE SEED MIX
- SOD
- SOD LIMITS
- POLY EDGING
- LANDSCAPING LIMITS

0 20' 40' 80'
SCALE IN FEET

ALLIANT
733 Marquette Avenue
Suite 700
Minneapolis, MN 55402
612.758.3080
www.alliant-inc.com

OAK RIDGE COMMONS
PLANNED UNIT DEVELOPMENT SUBMITTAL
HWY 41 & PEAVEY ROAD
CHASKA, MN

LANDSCAPE PLAN - VIEW 1

I hereby certify that this plan, specification, or report was prepared by me or under my direct supervision and that I am a duly Licensed LANDSCAPE ARCHITECT under the laws of the State of MINNESOTA

MARK KRONBECK PLA, ASLA

4-25-22 — Date
26222 — License No.

QUALITY ASSURANCE/CONTROL

BY	DATE

DATE	ISSUE
9-7-21	PUD RESUBMITTAL
9-30-21	PROGRESS
10-11-21	PUD RESUBMITTAL
10-22-21	CITY COMMENTS
10-26-21	CITY COMMENTS
11-17-21	CCWMO RESUBMITTAL
11-17-21	BID SET
1-10-22	SIGNAGE UPDATE
2-1-22	PUD RESUBMITTAL
3-15-22	LANDSCAPE PLAN UPDATE
3-28-22	CONSTRUCTION DOCUMENTS
4-25-22	CITY & COUNTY COMMENTS

PROJECT TEAM DATA
DESIGNED: MK
DRAWN: MLS
PROJECT NO: 221-0004

L-2.1

Drawing name: X:\2021\210004\plan sheets\210004land.dwg Apr 25, 2022 – 5:53pm



LEGEND:

- DECIDUOUS OVERSTORY TREES
- CONIFEROUS TREES
- ORNAMENTAL TREES
- SHRUBS
- PERENNIALS
- WOODLAND EDGE SOUTH AND WEST SEED MIX — MN STATE 36–211 SEED MIX
- WETLAND REHABILITATION SEED MIX — MN STATE 34–171 SEED MIX
- DRY PRAIRIE SOUTHEAST MIX — MN STATE 35–261 SEED MIX
- POND SIDE SLOPE SEED MIX — MN STATE 35–241 MESIC PRAIRIE SEED MIX
- SANDY GENERAL ROADSIDE SEED MIX — MN STATE 25–121 SANDY GENERAL ROADSIDE SEED MIX
- SOD
- SOD LIMITS
- POLY EDGING
- LANDSCAPING LIMITS

0 20' 40' 80'
SCALE IN FEET

LANDSCAPE SCHEDULE:

QUANTITY	KEY	COMMON NAME	SCIENTIFIC NAME	SIZE / ROOT TYPE	NOTES
OVERSTORY TREES					
8	HL	Skyline Honey Locust	Gleditisia tricanthos var. inermis 'Skycole'	2.5" Cal. B&B	Straight Trunk, No V-Crotch
12	KC	Kentucky Espresso Coffee Tree	Gymnocladus dioica 'Espresso - JFS'	4" Cal. B&B	Straight Trunk, No V-Crotch
8	NH	New Harmony Elm	Ulmus americana 'New Harmony'	3" Cal. B&B	Straight Trunk, No V-Crotch
3	SH	Sunburst Honeylocust	Gleditisia tricanthos var. inermis 'Suncole'	2.5" Cal. B&B	Straight Trunk, No V-Crotch
16	RO	Red Oak	Quercus rubra	3.5" Cal. B&B	Straight Trunk, No V-Crotch
8	WO	White Oak	Quercus alba	4.5" Cal. B&B	Straight Trunk, No V-Crotch
Total					
55					
ORNAMENTAL TREES					
12	AC	Amur Cherry	Prunus maackii	8' Height, B&B	Clump Form
8	MW	Muscle Wood	Carpinus caroliniana	6' Height, B&B	Clump Form
4	RS	Red Splendor Crabapple	Malus 'Red Splendor'	1.5" Cal. B&B	Straight Trunk, No V-Crotch
6	SS	Spring Snow Crabapple	Malus 'Spring Snow'	2" Cal. B&B	Straight Trunk, No V-Crotch
Total					
30					
EVERGREEN TREES					
5	BS	Black Hills Spruce	Picea densata	6' ht. B&B	Full Form
1	NS	Norway Spruce	Picea abies	6' ht. B&B	Full Form
17	SP	Scotch Pine	Pinus sylvestris	12' ht. B&B	Full Form
Total					
23					
SHRUBS					
26	AH	American Hazelnut	Corylus americana	24" Height Cont.	Min. 5 canes at ht. spec.
9	BM	Broadmoor Juniper	Juniperus sabina 'broadmoor'	12" Height Cont	Min. 5 canes at ht. spec.
32	CD	Cardinal Dogwood	Cornus sericea 'Cardinal'	36" Height Cont.	Min. 5 canes at ht. spec.
15	GD	Grey Dogwood	Cornus racemosa	36" Height Cont.	Min. 5 canes at ht. spec.
21	HY	Quickfire Hydrangea	Hydrangea paniculata 'Bulk'	36" Height Cont.	Min. 5 canes at ht. spec.
17	KO	Knockout Rose	Rosa ragusa	18" Height Cont.	Min. 5 canes at ht. spec.
5	ID	Isanti Dogwood	Cornus sericea 'Isanti'	24" Height Cont.	Min. 5 canes at ht. spec.
21	MJ	Mint Julep Juniper	Juniperus chinensis 'Sea Green'	24" Height Cont	Min. 5 canes at ht. spec.
3	MV	Mohican Viburnum	Viburnum lantana 'Mohican'	36" Height Cont.	Min. 5 canes at ht. spec.
26	NF	Neon Flash Spirea	Spirea 'Neon Flash'	18" Height Cont	Min. 5 canes at ht. spec.
18	SF	Showoff Forsythia	Forsythia x intermedia 'Windor'	24" Height Cont.	Min. 5 canes at ht. spec.
42	SJ	Scandia Juniper	Juniperus sabina 'Scandia'	8" Height Cont	Min. 5 canes at ht. spec.
Total					
235					
PERENNIALS & ORNAMENTAL GRASSES					
10	BBS	Big Blue Stem	Andropogon gerardii	1 Gal. Cont.	
81	HRD	Happy Returns Daylily	Hemerocallis 'Happy Returns'	1 Gal. Cont.	
4	JPE	Joepye Weed	Eupatorium maculatum	1 Gal. Cont.	
68	KFG	Karl Foerster Grass	Calamagrostis x acutifolia 'Karl Foerster'	1 Gal. Cont.	
32	LBS	Little Bluestem	Schizachirum scoparium	1 Gal. Cont.	
6	PCF	Purple Coneflower	Echinacea purpurea	1 Gal. Cont.	

LANDSCAPE REQUIREMENTS:

CHASKA LANDSCAPING REQUIREMENTS:
ALL OPEN AREAS OF A LOT WHICH ARE NOT USED AND IMPROVED FOR OFF-STREET PARKING, LOADING AND DRIVING AREAS SHALL BE LANDSCAPED WITH LAWN, GROUND COVER, TREES, SHRUBS, ETC., OR LEFT IN A NATURAL STATE. ANY AREAS LEFT NATURAL SHALL BE KEPT FREE OF LITTER, DEBRIS AND NOXIOUS OR UNSIGHTLY WEEDS. THE FOLLOWING MINIMUM STANDARDS SHALL BE REQUIRED:

OVERSTORY DECIDUOUS TREES ..... 2 1/2 INCH DIAMETER
ORNAMENTAL TREES ..... 1 1/2 INCH DIAMETER
CONIFEROUS TREES ..... 6 FEET TALL
MAJOR SHRUB PLANTING ..... 5 GALLONS

SITES CONTAINING SIGNIFICANT EXISTING TREES WHICH WILL BE RETAINED MAY BE GIVEN A CREDIT AGAINST THE CALIPER INCH TREE REQUIREMENTS. SIGNIFICANT TREES ARE DEFINED AS CONIFEROUS TREES TWELVE (12) FEET OR MORE IN HEIGHT, OVERSTORY DECIDUOUS TREES TEN (10) IN DIAMETER, OR UNDERSTORY DECIDUOUS TREES SIX (6) INCHES OR MORE IN DIAMETER. EXAMPLES OF ACCEPTABLE UNDERSTORY TREES ARE CRABAPPLE, RUSSIAN OLIVE, RIVER BIRCH, AND AMUR MAPLE. THE AMOUNT OF CREDIT WILL BE BASED ON LOCATION AND SIZE AS DETERMINED BY THE COMMUNITY DEVELOPMENT DEPARTMENT. CREDIT SHALL NOT BE GIVEN TO DEAD, DAMAGED, OR DISEASED TREES.

IN ORDER TO ACHIEVE LANDSCAPING WHICH IS APPROPRIATE IN SCALE WITH THE SIZE OF A BUILDING SITE, THE MINIMUM NUMBER OF CALIPER INCHES OF OVERSTORY TREES REQUIRED SHALL BE DETERMINED BY DIVIDING THE TOTAL GROSS SQUARE FOOTAGE OF ALL FLOORS OF A BUILDING BY 320. A SINGLE-STORY BUILDING IN EXCESS OF TWENTY-FOUR (24) FEET IN HEIGHT SHALL BE CONSIDERED A TWO-STORY BUILDING FOR THE PURPOSES OF DETERMINING ITS TOTAL GROSS SQUARE FOOTAGE. UNDERSTORY TREES AND SHRUBS. IN ADDITION TO THE REQUIRED NUMBER OF OVERSTORY TREES LISTED ABOVE, A FULL COMPLEMENT OF UNDERSTORY TREES AND SHRUBS SHALL BE PROVIDED TO COMPLETE A QUALITY LANDSCAPE TREATMENT OF THE SITE. A MINIMUM NUMBER OF UNDERSTORY TREES AND SHRUBS ARE REQUIRED AS FOLLOWS: THE NUMBER OF UNDERSTORY TREES SHALL BE EQUAL TO TWENTY-FIVE (25) PERCENT OF THE REQUIRED NUMBER OF OVERSTORY TREES; AND THE NUMBER OF SHRUBS SHALL BE EQUAL TO ONE (1) SHRUB PER THIRTY (30) FEET OF SITE PERIMETER OR ONE (1) SHRUB PER THREE-HUNDRED (300) SQUARE FEET OF BUILDING FOOTPRINT, WHICHEVER IS GREATER

TREE CALCULATIONS:

171,000 GROSS S.F. (HOTEL + CONVENTION CENTER) / 320 S.F. = 534 INCHES REQUIRED

381.5 CALIPER INCHES PROVIDED ON LOT 1. (INCLUDES PROPOSED EVERGREEN TREES)
ADDITIONAL TREES PROVIDED VIA EXISTING TREE CREDIT. SEE L-2.0 FOR LANDSCAPE REQUIREMENTS – OVERALL SUMMARY

REQUIRED TREE SIZING:
60% @ 2.5" CAL. =
10% @ 3" CAL. =
10% @ 3.5" CAL. =
10% @ 4" CAL. =
10% @ 4.5" CAL. =

PROVIDED TREE SIZING:
2.5" CAL. = 25 TREES 27%
3" CAL. = 20 TREES 22%
3.5" CAL. = 16 TREES 17%
4" CAL. = 12 TREES 13%
4.5" CAL. = 25 TREES 21%

25% OF THE TOTAL NUMBER OF OVERSTORY TREES EQUALS THE NUMBER OF REQUIRED ORNAMENTAL TREES REQUIRED ON SITE
78 OVERSTORY TREES PROVIDED ON LOT 1
78 • .25 = 20 ORNAMENTAL TREES REQUIRED
30 ORNAMENTAL TREES PROVIDED ON LOT 1

ALLIANT
733 Marquette Avenue
Suite 700
Minneapolis, MN 55402
612.758.3080
www.alliant-inc.com

OAK RIDGE COMMONS
PLANNED UNIT DEVELOPMENT SUBMITTAL
HWY 41 & PEAVEY ROAD
CHASKA, MN

LANDSCAPE PLAN - VIEW 2

I hereby certify that this plan, specification, or report was prepared by me or under my direct supervision and that I am a duly Licensed LANDSCAPE ARCHITECT under the laws of the State of MINNESOTA

MARK KRONBECK PLA, ASLA

4-25-22 — Date
26222 — License No.

QUALITY ASSURANCE/CONTROL

BY	DATE

DATE	ISSUE
9-7-21	PUD RESUBMITTAL
9-30-21	PROGRESS
10-11-21	PUD RESUBMITTAL
10-22-21	CITY COMMENTS
10-26-21	CITY COMMENTS
11-17-21	CCWMO RESUBMITTAL
11-17-21	BID SET
1-10-22	SIGNAGE UPDATE
2-1-22	PUD RESUBMITTAL
5-15-22	LANDSCAPE PLAN UPDATE
3-28-22	CONSTRUCTION DOCUMENTS
4-25-22	CITY & COUNTY COMMENTS

PROJECT TEAM DATA
DESIGNED: MK
DRAWN: MLS
PROJECT NO: 221-0004

L-2.2

Drawing name: X:\2021\210004\plan sheets\210004land.dwg Apr 25, 2022 - 6:00pm

LEGEND:

- DECIDUOUS OVERSTORY TREES
- CONIFEROUS TREES
- ORNAMENTAL TREES
- SHRUBS
- PERENNIALS
- WOODLAND EDGE SOUTH AND WEST SEED MIX — MN STATE 35–211 SEED MIX
- WETLAND REHABILITATION SEED MIX — MN STATE 34–171 SEED MIX
- DRY PRAIRIE SOUTHEAST MIX — MN STATE 35–261 SEED MIX
- POND SIDE SLOPE SEED MIX — MN STATE 35–241 MESIC PRAIRIE SEED MIX
- SANDY GENERAL ROADSIDE SEED MIX — MN STATE 25–121 SANDY GENERAL ROADSIDE SEED MIX
- SOD
- SOD LIMITS
- POLY EDGING
- LANDSCAPING LIMITS

LANDSCAPE REQUIREMENTS:

CHASKA LANDSCAPING REQUIREMENTS:
ALL OPEN AREAS OF A LOT WHICH ARE NOT USED AND IMPROVED FOR OFF–STREET PARKING, LOADING AND DRIVING AREAS SHALL BE LANDSCAPED WITH LAWN, GROUND COVER, TREES, SHRUBS, ETC., OR LEFT IN A NATURAL STATE.
ANY AREAS LEFT NATURAL SHALL BE KEPT FREE OF LITTER, DEBRIS AND NOXIOUS OR UNSIGHTLY WEEDS.
THE FOLLOWING MINIMUM STANDARDS SHALL BE REQUIRED:

OVERSTORY DECIDUOUS TREES ..... 2 1/2 INCH DIAMETER
ORNAMENTAL TREES ..... 1 1/2 INCH DIAMETER
CONIFEROUS TREES..... 6 FEET TALL
MAJOR SHRUB PLANTING ..... 5 GALLONS

SITES CONTAINING SIGNIFICANT EXISTING TREES WHICH WILL BE RETAINED MAY BE GIVEN A CREDIT AGAINST THE CALIPER INCH TREE REQUIREMENTS. SIGNIFICANT TREES ARE DEFINED AS CONIFEROUS TREES TWELVE (12) FEET OR MORE IN HEIGHT, OVERSTORY DECIDUOUS TREES TEN (10) IN DIAMETER, OR UNDERSTORY DECIDUOUS TREES SIX (6) INCHES OR MORE IN DIAMETER. EXAMPLES OF ACCEPTABLE UNDERSTORY TREES ARE CRABAPPLE, RUSSIAN OLIVE, RIVER BIRCH, AND AMUR MAPLE. THE AMOUNT OF CREDIT WILL BE BASED ON LOCATION AND SIZE AS DETERMINED BY THE COMMUNITY DEVELOPMENT DEPARTMENT. CREDIT SHALL NOT BE GIVEN TO DEAD, DAMAGED, OR DISEASED TREES.

IN ORDER TO ACHIEVE LANDSCAPING WHICH IS APPROPRIATE IN SCALE WITH THE SIZE OF A BUILDING SITE, THE MINIMUM NUMBER OF CALIPER INCHES OF OVERSTORY TREES REQUIRED SHALL BE DETERMINED BY DIVIDING THE TOTAL GROSS SQUARE FOOTAGE OF ALL FLOORS OF A BUILDING BY 320. A SINGLE–STORY BUILDING IN EXCESS OF TWENTY–FOUR (24) FEET IN HEIGHT SHALL BE CONSIDERED A TWO–STORY BUILDING FOR THE PURPOSES OF DETERMINING ITS TOTAL GROSS SQUARE FOOTAGE. UNDERSTORY TREES AND SHRUBS. IN ADDITION TO THE REQUIRED NUMBER OF OVERSTORY TREES LISTED ABOVE, A FULL COMPLEMENT OF UNDERSTORY TREES AND SHRUBS SHALL BE PROVIDED TO COMPLETE A QUALITY LANDSCAPE TREATMENT OF THE SITE. A MINIMUM NUMBER OF UNDERSTORY TREES AND SHRUBS ARE REQUIRED AS FOLLOWS: THE NUMBER OF UNDERSTORY TREES SHALL BE EQUAL TO TWENTY–FIVE (25) PERCENT OF THE REQUIRED NUMBER OF OVERSTORY TREES; AND THE NUMBER OF SHRUBS SHALL BE EQUAL TO ONE (1) SHRUB PER THIRTY (30) FEET OF SITE PERIMETER OR ONE (1) SHRUB PER THREE–HUNDRED (300) SQUARE FEET OF BUILDING FOOTPRINT, WHICHEVER IS GREATER

TREE CALCULATIONS:

336,000 GROSS S.F. (14 MULTIFAMILY BUILDINGS) / 320 S.F. = 1050 CALIPER INCHES
1050 CALIPER INCHES

REQUIRED: 1,050 INCHES

PROVIDED: 712 INCHES PROVIDED
+731 INCHES PRESERVED
1,443 INCHES PROVIDED ON LOT THREE

REQUIRED TREE SIZING:
10% @ 2.5" CAL. = 69 TREES 44.5%
10% @ 3" CAL. = 38 TREES 24.5%
10% @ 3.5" CAL. = 15 TREES 10%
10% @ 4" CAL. = 21 TREES 13.5%
10% @ 4.5" CAL. = 12 TREES 7.5%

PROVIDED TREE SIZING:
2.5" CAL. = 69 TREES 44.5%
3" CAL. = 38 TREES 24.5%
3.5" CAL. = 15 TREES 10%
4" CAL. = 21 TREES 13.5%
4.5" CAL. = 12 TREES 7.5%

25% OF THE TOTAL NUMBER OF OVERSTORY TREES EQUALS THE NUMBER OF REQUIRED ORNAMENTAL TREES REQUIRED ON SITE
155 OVERSTORY TREES PROVIDED ON LOT 3
155 * .25 = 39 ORNAMENTAL TREES REQUIRED
71 ORNAMENTAL TREES PROVIDED ON LOT 3

LANDSCAPE SCHEDULE:

QUANTITY	KEY	COMMON NAME	SCIENTIFIC NAME	SIZE / ROOT TYPE	NOTES
OVERSTORY TREES					
3	AS	Autumn Splendor Buckeye	Aesculus x arnoldiana 'Autumn Splendor'	2.5" Cal. B&B	Straight Trunk, No V-Crotch
3	BO	Burr Oak	Quercus macrocarpa	2.5" Cal. B&B	Straight Trunk, No V-Crotch
9	CC	Crimson Spire Oak	Quercus alba x Quercus robur	2.5" Cal. B&B	Straight Trunk, No V-Crotch
7	CH	Common Hackberry	Celtis occidentalis	3.5" Cal. B&B	Straight Trunk, No V-Crotch
10	HL	Skyline Honey Locust	Gleditsia tricanthos var. inermis 'Skycole'	4.5" Cal. B&B	Straight Trunk, No V-Crotch
8	IW	Ironwood	Ostrya virginiana	2.5" Cal. B&B	Straight Trunk, No V-Crotch
18	KC	Kentucky Espresso Coffee Tree	Gymnocladus dioica 'Espresso - JFS"	2.5" Cal. B&B	Straight Trunk, No V-Crotch
11	MW	Muscle Wood	Carpinus caroliniana	8' Height. B&B	Clump Form
4	NH	New Harmony Elm	Ulmus americana 'New Harmony'	2.5" Cal. B&B	Straight Trunk, No V-Crotch
13	PM	Amur Cherry	Prunus Mackii	2.5" Cal. B&B	Clump Form
11	SH	Sunburst Honeylocust	Gleditsia tricanthos var. inermis 'Suncole'	3" Cal. B&B	Straight Trunk, No V-Crotch
16	RO	Red Oak	Quercus rubra	3" Cal. B&B	Straight Trunk, No V-Crotch
21	RM	Red Maple	Acer rubrum 'Jeffersred'	4" Cal. B&B	Straight Trunk, No V-Crotch
8	RRM	Red Maple	Acer rubrum	3.5" Cal. B&B	Straight Trunk, No V-Crotch
11	UM	Unity Maple	Acer saccharum 'Jefcan'	2.5" Cal. B&B	Straight Trunk, No V-Crotch
2	WO	White Oak	Quercus alba	4.5" Cal. B&B	Straight Trunk, No V-Crotch
Total					
155					
ORNAMENTAL TREES					
8	KS	Korean Sun Pear	Pyrus fauriei 'Westwood'	1.5" B&B	Straight Trunk, No V-Crotch
13	PR	Prairie Rose Crabapple	Malus 'Prairie Rose'	1.5" B&B	Straight Trunk, No V-Crotch
3	PS	Pink Spires Crabapple	Malus 'Pink Spires'	1.5" B&B	Straight Trunk, No V-Crotch
22	RS	Red Splendor Crabapple	Malus 'Red Splendor'	1.5" Cal. B&B	Straight Trunk, No V-Crotch
19	SB	Autumn Brilliance Serviceberry	Amelanchier x grandiflola	6' Height. B&B	Clump Form
6	SS	Spring Snow Crabapple	Malus 'Spring Snow'	2" Cal. B&B	Straight Trunk, No V-Crotch
Total					
71					
EVERGREEN TREES					
35	BS	Black Hills Spruce	Picea densata	12' ht. B&B	Full Form
12	NS	Norway Spruce	Picea abies	12' ht. B&B	Full Form
Total					
47					

QUANTITY	KEY	COMMON NAME	SCIENTIFIC NAME	SIZE / ROOT TYPE	NOTES
SHRUBS					
35	AB	Annabelle Hydrangea	Hydrangea arborescens 'Annabelle'	36" Height Cont.	Min. 5 canes at ht. spec.
48	AH	American Hazelnut	Corylus americana	36" Height Cont.	Min. 5 canes at ht. spec.
83	AJN	Autumn Jubilee Ninebark	Physocarpus opulifolius 'Jefam'	36" Height Cont.	Min. 5 canes at ht. spec.
51	BC	Bluechip Juniper	Juniperus horizontalis 'Blue Chip'	12" Height Cont.	Min. 5 canes at ht. spec.
8	CO	Cardinal Dogwood	Cornus sericea 'Cardinal'	36" Height Cont.	Min. 5 canes at ht. spec.
198	DL	Dwarf Bush Honeysuckle	Dierzilla lonicera	24" Height Cont.	Min. 5 canes at ht. spec.
18	DG	Dark Green Arborvitae	Thuja occidentalis 'Dark Green'	8ht. B&B	Similar Form - Hedge
5	GSS	Golden Spirit Smokebush	Cotinus coggygria 'Ancot'	48" Height Cont.	Min. 5 canes at ht. spec.
26	LH	Lime Light Hydrangea	Hydrangea paniculata 'Jane'	36" Height Cont.	Min. 5 canes at ht. spec.
17	QF	Quickfire Hydrangea	Hydrangea paniculata 'Bulk'	36" Height Cont.	Min. 5 canes at ht. spec.
16	IH	Ivory Halo Dogwood	Cornus alba 'Bailhalo'	36" Height Cont.	Min. 5 canes at ht. spec.
111	JB	Buffalo Juniper	Juniperus sabina 'Buffalo'	12" Height Cont.	Min. 5 canes at ht. spec.
127	JJ	Medora Juniper	Juniperus scopulorum 'Medora'	12" Height Cont.	Min. 5 canes at ht. spec.
83	IBC	Iroquois Beauty Chokeberry	Aronia melanocarpa 'Morton'	24" Height Cont.	Min. 5 canes at ht. spec.
35	LCN	Lemon Candy Ninebark	Physocarpus opulifolius 'Podaras 3'	24" Height Cont.	Min. 5 canes at ht. spec.
28	MAF	Fatherg'lla major 'Mount Airy'	Fatherg'lla major 'Mount Airy'	24" Height Cont.	Min. 5 canes at ht. spec.
18	MHV	Mohican Viburnum	Viburnum lantana 'Mohican'	48" Height Cont.	Min. 5 canes at ht. spec.
665	MJ	Mint Julep Juniper	Juniperus chinensis 'Sea Green'	24" Height Cont.	Min. 5 canes at ht. spec.
100	NFS	Neon Flash Spirea	Spirea 'Neon Flash'	18" Height Cont.	Min. 5 canes at ht. spec.
80	NJT	New Jersy Tea	Ceanothus americanus	12" Height Cont.	Min. 5 canes at ht. spec.
6	RA	Rushmore Arborvitae	Thuja occidentalis 'Rushmore'	48" Height Cont.	Fukl Form
101	RR	Foxi Pavement Rose	Rosa 'LHLater'	12" Height Cont.	Min. 5 canes at ht. spec.
23	SBW	Sonic Boom Wigela	Weigela florida 'Bokrasopin'	36" Height Cont.	Min. 5 canes at ht. spec.
20	SSC	Sixteen Candles Clethra	Clethra alnifolia 'Sixteen Candles'	12" Height Cont.	Min. 5 canes at ht. spec.
95	TTC	Toms Thumb Cottoneaster	Cotoneaster apiculatus 'Tom Thumb'	8" Height Cont.	Min. 5 canes at ht. spec.
Total					
1997					
PERENNIALS & ORNAMENTAL GRASSES					
75	BAP	False Indigo	Baptisia australis	1 Gal. Cont.	
17	JPW	Joepye Weed	Eupatorium maculatum	1 Gal. Cont.	
78	HFG	Hameln Fountain Grass	Pennisetum alopecuroides 'Hameln'	1 Gal. Cont.	
164	KFG	Karl Foerster Grass	Calamagrostis x acutifolia 'Karl Foerster'	3 Gal. Cont.	
493	LBS	Little Bluestem	Schizachirium scoparium	1 Gal. Cont.	
707	PDS	Prairie Dropseed	Sporobolus haterolepis	1 Gal. Cont.	
31	SNI	Indian Grass	Sorghastrum nutans	3 Gal. Cont.	
30	SSD	Stella Supreme Daylily	Hemerocalis 'Stella Supreme'	1 Gal. Cont.	
92	WCE	Winter Creeper Euonymus	Euonymus fortunei 'Colorata	1 Gal. Cont.	

NOTE: PERENNIALS TO BE DIVERSIFIED IN THE FUTURE FOR ADDITIONAL SEASONAL INTEREST



ALLIANT
733 Marquette Avenue
Suite 700
Minneapolis, MN 55402
612.758.3080
www.alliant-inc.com

OAK RIDGE COMMONS
PLANNED UNIT DEVELOPMENT SUBMITTAL
HWY 41 & PEAVEY ROAD
CHASKA, MN

LANDSCAPE PLAN - VIEW 3

I hereby certify that this plan, specification, or report was prepared by me or under my direct supervision and that I am a duly Licensed LANDSCAPE ARCHITECT under the laws of the State of MINNESOTA

MARK KRONBECK PLA, ASLA

4–25–22 — Date — 26222 — License No.

QUALITY ASSURANCE/CONTROL

BY	DATE

DATE	ISSUE
9–7–21	PUD RESUBMITTAL
9–30–21	PROGRESS
10–11–21	PUD RESUBMITTAL
10–21–21	CITY COMMENTS
10–26–21	CITY COMMENTS
11–17–21	CCWMO RESUBMITTAL
11–17–21	BID SET
1–10–22	SIGNAGE UPDATE
2–1–22	PUD RESUBMITTAL
3–15–22	LANDSCAPE PLAN UPDATE
3–28–22	CONSTRUCTION DOCUMENTS
4–25–22	CITY & COUNTY COMMENTS

PROJECT TEAM DATA

DESIGNED:	MK
DRAWN:	MLS
PROJECT NO:	221–0004

L-2.3

Drawing name: K:\2021\210004\plan sheet\210004land.dwg Apr 25, 2022 – 6:08pm

LANDSCAPE NOTES

1. CALL GOPHER STATE ONE CALL AT 651-454-0002 FOR LOCATING ALL UNDERGROUND UTILITIES AND TO AVOID DAMAGE TO UTILITIES DURING THE COURSE OF THE WORK.
2. INSTALL 4" MIN. TOP SOIL TO ALL SOD AND SHRUB AREAS. FINE GRADE ALL SOD AREAS. INSTALL 12" PLANTING (TOP) SOIL TO ALL ANNUAL/PERENNIAL AREAS.
3. STAKE OR MARK ALL PLANT MATERIAL LOCATIONS PRIOR TO INSTALLATION. HAVE OWNERS REPRESENTATIVE APPROVE ALL STAKING PRIOR TO INSTALLATION.
4. ALL SHRUB AREAS UNLESS SPECIFIED AS OTHER ON THE PLAN, TO BE BED MULCHED WITH 4" DEPTH OF HARDWOOD MULCH, NATURAL COLOR, OVER FILTER FABRIC, POLY-EDGER TO BE VALLEY VIEW BLACK DIAMOND OR APPROVED.
5. ALL MULCH AND ROCK (BOULDERS, COBBLESTONE, ETC) TO BE APPROVED BY OWNER AND/OR LANDSCAPE ARCHITECT PRIOR TO INSTALLATION.
6. INSTALL 4-6" DEPTH SHREDDED HARDWOOD MULCH AROUND ROOT SAUCER OF ALL TREES ISOLATED FROM PLANT BEDS.
7. PLANTING SOIL SHALL BE 1:1:1 CONSISTING OF 33% SELECT LOAMY TOPSOIL, 33% PEAT MOSS, 33% PIT RUN SAND. SEE FILTRATION BASIN DETAILS & NOTES FOR SOIL WITHIN FILTRATION BASIN AREAS.
8. COMPLETELY GUARANTEE ALL WORK FOR A PERIOD OF TWO YEARS BEGINNING AT THE DATE OF ACCEPTANCE. MAKE ALL REPLACEMENTS PROMPTLY (AS PER DIRECTION OF OWNER).
9. ALL MATERIAL SHALL COMPLY WITH THE LATEST EDITION OF THE AMERICAN STANDARD FOR NURSERY STOCK, AMERICAN ASSOCIATION OF NURSERYMEN.
10. ALL TREE TRUNKS SHALL BE WRAPPED WITH BROWN CREPE TREE WRAP. APPLY WRAP IN NOVEMBER AND REMOVE IN APRIL.
11. MAINTAIN ALL PLANT MATERIALS, INCLUDING WATERING, UNTIL THE TIME OF ACCEPTANCE.
12. COORDINATE LANDSCAPE INSTALLATION WITH GENERAL CONTRACTOR.
13. STAKING AND GUYING OF TREES OPTIONAL: MAINTAIN PLUMBNESS OF TREES FOR DURATION OF WARRANTY PERIOD.
14. SWEEP AND WASH ALL PAVED SURFACES AND REMOVE ALL DEBRIS RESULTING FROM LANDSCAPE OPERATIONS DAILY.
15. SUPPLY DESIGN AND INSTALLATION FOR NEW IRRIGATION SYSTEM WITH COVERAGE OF SOD AND PLANTING AREAS. USE RAINBIRD OR APPROVED EQUAL. COORDINATE INSTALLATION WITH G.C. SOD AND SHRUB AREAS TO BE ON SEPARATE ZONES. PROVIDE RAIN SENSOR. BOULEVARDS TO BE SODDED AND IRRIGATED.
16. IF DISTURBED, WETLAND SETBACKS OR OTHER NATURAL AREAS SHALL BE RESTORED WITH NATIVES.

SEEDING NOTES

FILTRATION BASIN NATIVE SEED MIX: MN STATE SEED MIX 33-262 (DRY SWALE/POND MIX). SEEDING RATE TO BE 44 LBS/ACRE.

WET PRAIRIE NATIVE SEED MIX: MN STATE SEED MIX 35-262 (WET PRAIRIE MIX). SEEDING RATE TO BE 14.5 LBS/ACRE (PURE LIVE SEED).

GRASS SEED MIX: MN STATE SEED MIX 25-131 (LOW MAINTENANCE TURF MIX). SEEDING RATE TO BE 220 LBS/ACRE.

APPLY SEED PER THE FOLLOWING: MULCH SEEDED AREAS WITH Mn/DOT TYPE 3 (MCIA CERTIFIED WEED FREE) MULCH AT A RATE OF 1 TON PER ACRE WITHIN 48 HOURS OF SEEDING. MULCH SHOULD THEN BE DISC ANCHORED TO KEEP IT FROM BLOWING AWAY.

SEEDING SHALL BE APPLIED FROM APRIL 1 – JUNE 30 OR NOV. 1 – FREEZE UP. IF HYDROSEEDING UTILIZE APPROXIMATELY 500 GALLONS OF WATER PER ACRE. REFER TO MN/DOT SPEC 3884 FOR PROPER INSTALLATION OF HYDRO-SEED. ALL NATIVE SEEDS USED ON THIS PROJECT SHALL BE CERTIFIED TO BE OF MINNESOTA ORIGIN BY THE MINNESOTA CROP IMPROVEMENT ASSOCIATION (MCIA). SITE TO BE PREPARED BY LOOSENING TOPSOIL TO A MINIMUM DEPTH OF 3 INCHES. THE SITE TO BE HARROWED OR RAKED FOLLOWING SEEDING, AND THEN PACKED USING A CULTI-PACKER OR EQUIVALENT. SEE MNDOT SEEDING MANUAL FOR REFERENCE.

MAINTAIN SEEDED AREAS BY WATERING, REMULCHING AND REPLANTING AS NECESSARY TO ESTABLISH A UNIFORMLY DENSE STAND OF THE SPECIFIED GRASSES UNTIL ACCEPTED. ANY AREAS FAILING TO ESTABLISH A STAND SHALL BE RESEEDED, REFERTILIZED AND REMULCHED (UNLESS OTHERWISE SPECIFIED) WHENEVER 70% VEGETATIVE COVER IS NOT ACHIEVED. RESEEDING SHALL CONFORM IN ALL RESPECTS TO THESE SPECIFICATIONS. THE CONTRACTOR SHALL REPAIR ANY DAMAGE TO THE WORK AREAS RESULTING FROM EROSION AND/OR EQUIPMENT. THE CONTRACTOR SHALL REPAIR DAMAGE, INCLUDING REGRADING, RESEEDING, ETC. AS NECESSARY, BEFORE SIGNIFICANT DAMAGE OCCURS.

REFER TO MN STATE SEED MIX MANUAL. REFER TO O&M DOCUMENT FOR FURTHER DETAILS REGARDING INSPECTION AND MAINTENANCE PRACTICES.

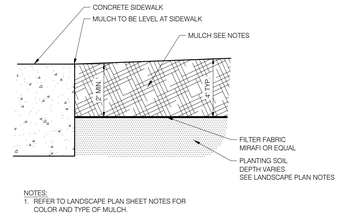

NOTES:
1. REFER TO LANDSCAPE PLAN SHEET NOTES FOR COLOR AND TYPE OF MULCH.

1 L-3.0 MULCH AT SIDEWALK
NOT TO SCALE

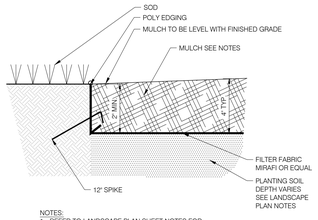

NOTES:
1. REFER TO LANDSCAPE PLAN SHEET NOTES FOR COLOR AND TYPE OF MULCH.

2 L-3.0 MULCH AT SOD
NOT TO SCALE

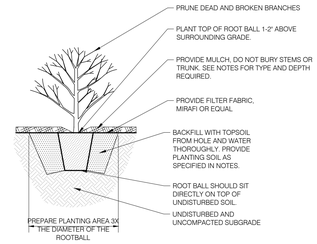

3 L-3.0 SHRUB PLANTING
NOT TO SCALE

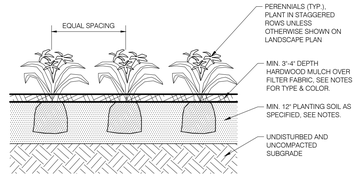

4 L-3.0 PERENNIAL PLANTING
NOT TO SCALE

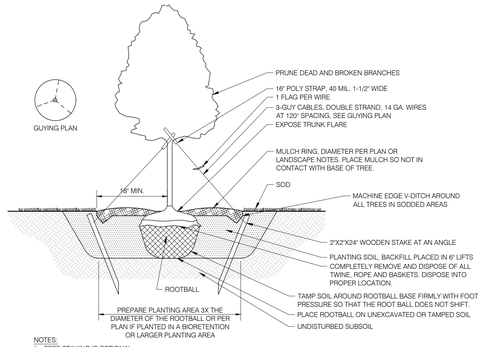

NOTES:
1. TREE STAKING IS OPTIONAL.
2. DO NOT PRUNE THE TREE AT PLANTING. PRUNE ONLY CROSSOVER LIMBS, CO-DOMINANT LEADERS AND BROKEN OR DEAD BRANCHES.
3. FOR TREES IN CONTAINERS, REMOVE CONTAINER PRIOR TO PLANTING. FOR BARE ROOT TREES, PLACE TREE IN MIDDLE OF PLANTING HOLE, SPREAD ROOTS OUT RADIALLY FROM THE TRUNK AROUND THE PREPARED HOLE.

5 L-2.0 TREE PLANTING
NOT TO SCALE

ALLIANT
733 Marquette Avenue
Suite 700
Minneapolis, MN 55402
612.758.3080
www.alliant-inc.com

OAK RIDGE COMMONS
PLANNED UNIT DEVELOPMENT SUBMITTAL
HWY 41 & PEAVEY ROAD
CHASKA, MN

LANDSCAPE DETAILS

I hereby certify that this plan, specification, or report was prepared by me or under my direct supervision and that I am a duly Licensed LANDSCAPE ARCHITECT under the laws of the State of MINNESOTA

MARK KRONBECK PLA, ASLA

4-25-22 — Date
26222 — License No.

QUALITY ASSURANCE/CONTROL

BY	DATE

DATE	ISSUE
9-7-21	PUD RESUBMITTAL
9-30-21	PROGRESS
10-11-21	PUD RESUBMITTAL
10-22-21	CITY COMMENTS
10-26-21	CITY COMMENTS
11-17-21	CCWMO RESUBMITTAL
11-17-21	BID SET
1-10-22	SIGNAGE UPDATE
2-1-22	PUD RESUBMITTAL
3-15-22	LANDSCAPE PLAN UPDATE
3-28-22	CONSTRUCTION DOCUMENTS
4-25-22	CITY & COUNTY COMMENTS

PROJECT TEAM DATA

DESIGNED: MK
DRAWN: MLS
PROJECT NO: 221-0004

L-3.0

Drawing name: X:\2021\210004\plan sheets\210004land.dwg Apr 25, 2022 - 6:09pm

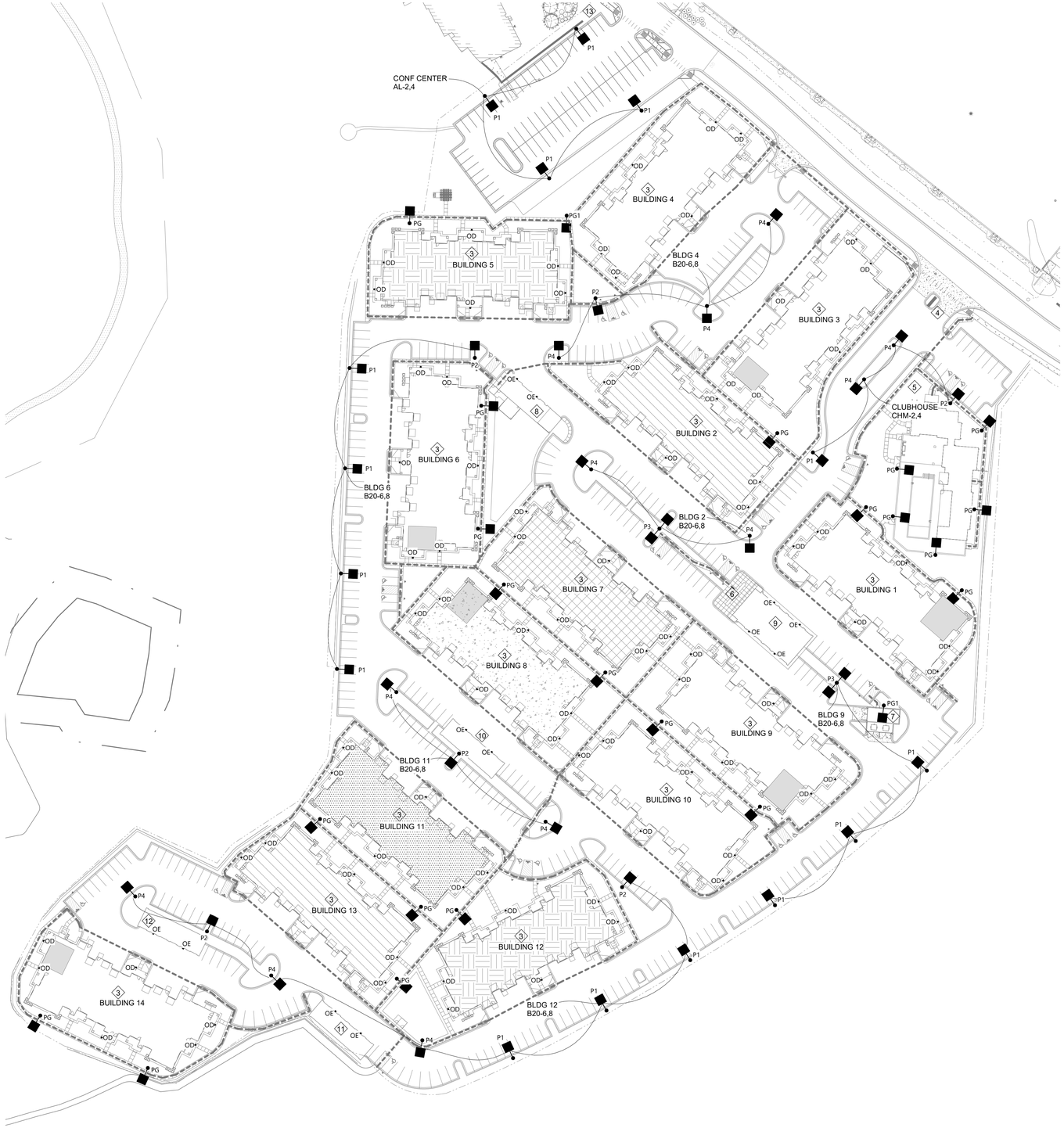

1 ELECTRICAL SITE PLAN - VIEW 1
1" = 60'-0"

PLAN NORTH

TRUE NORTH

GENERAL NOTES:

A. VERIFY VOLTAGE DROP DOES NOT EXCEED 3% BASED ON ACTUAL CONDUCTOR ROUTING.

B. ALL SITE POLES TO BE MOUNTED AT 25'-0" AFG.

C. ALL PEDESTRIAN POLES TYPE PG TO BE MOUNTED AT 15'-0" AFG

D. ALL PEDESTRIAN POLES TYPE PG1 TO BE MOUNTED AT 15'-0" AFG

E. ALL WALL MOUNTED FIXTURES TYPE OC TO BE MOUNTED AT 10'-0" AFG

F. ALL WALL MOUNTED FIXTURES TYPE OD TO BE MOUNTED AT 10'-0" AFG

G. ALL WALL MOUNTED FIXTURES TYPE OE TO BE MOUNTED AT 9'-5" AFG.

H. REFER TO ARCHITECTURAL SITE PLAN FOR LOCATION OF UTILITY TRANSFORMERS AND BUILDING SERVICE LOCATIONS.

PLAN NOTES: (#)

1. PEDESTRIAN SITE POLE TO BE OFFSET A MINIMMUM OF 15'-0" FROM PROPERTY LINE.
2. SITE POLE TO BE OFFSET A MINIMUM OF 22'-0" FROM PROPERTY LINE.
3. BUILDING MOUNTING LIGHTING SHALL BE SUPPLIED BY THE HOUSE PANEL FOR THAT BUILDING. SEE BUILDING PLANS FOR CIRCUITS
4. COORDINATE EXACT REQUIREMENTS OF BUILDING MONUMENT SIGN WITH VENDOR PRIOR TO INSTALLATION. PROVIDE A GFI WEATHERPROOF RECEPTACLE AT MONUMENT SIGN FOR SEASONAL LIGHTING. REFER TO CLUBHOUSE DRAWINGS FOR MORE INFORMATION. UTILIZE CIRCUITS CHM 8 AND 10.
5. PROVIDE (3) TYPE "OF" FLOODLIGHTS PER FLAGPOLE. FIXTURES TO BE FED FROM CIRCUIT CHM-6. REFER TO LIGHT FIXTURE SCHEDULE FOR FIXTURE INFORMATION.
6. MAIL KIOSK, REFER TO MAIL KIOSK DRAWING FOR ELECTRICAL REQUIREMENTS.
7. TRASH ENCLOSURE, REFER TO TRASH ENCLOSURE DRAWINGS FOR ELECTRICAL REQUIREMENTS.
8. GROUNDS/MAINTENANCE BUILDING, REFER TO GROUNDS BUILDING DRAWINGS FOR ELECTRICAL REQUIREMENTS.
9. GARAGE SUPPLIED FROM BUILDING #1.
10. GARAGE SUPPLIED FROM BUILDING #11.
11. GARAGE SUPPLIED FROM BUILDING #14.
12. GARAGE SUPPLIED FROM BUILDING #13.
13. APPROXIMATE LOCATION OF ELECTRICAL SERVICE FOR AUXILIARY LOT. REFER TO DETAIL 2 ON E601S.

CONTINENTAL PROPERTIES
CONTINENTAL 000123 FUND LLC
W134 N8675 EXECUTIVE PARKWAY
MENOMONEE FALLS, WI 53051
262.502.5500 * FAX 262.502.5522

RING & DUCHATEAU
17400 West Capitol Drive, Brookfield, WI 53045
301 South Blount Street, Suite 101 - Madison, WI 53703
Phone: 414.778.1700 / Fax: 414.778.2360 / r-d@ringdu.com

THIS BAR IS 1" LONG.
IF IT MEASURES ANYTHING OTHER THAN 1"
ADJUST SCALE ACCORDINGLY.
R&D Project No.: 221181.00

Revisions

CONSTRUCTION DOCUMENTS

Drawing Date
03/28/2022

SPRINGS AT McKNIGHT LAKE
NORTH CHESNUT STREET & OAKRIDGE DRIVE,
CHASKA, MINNESOTA 55218

Project No.
221001.06

Sheet Title
ELECTRICAL SITE PLAN - VIEW 1

Sheet No.
E100S

4/15/2022 8:50:10 AM

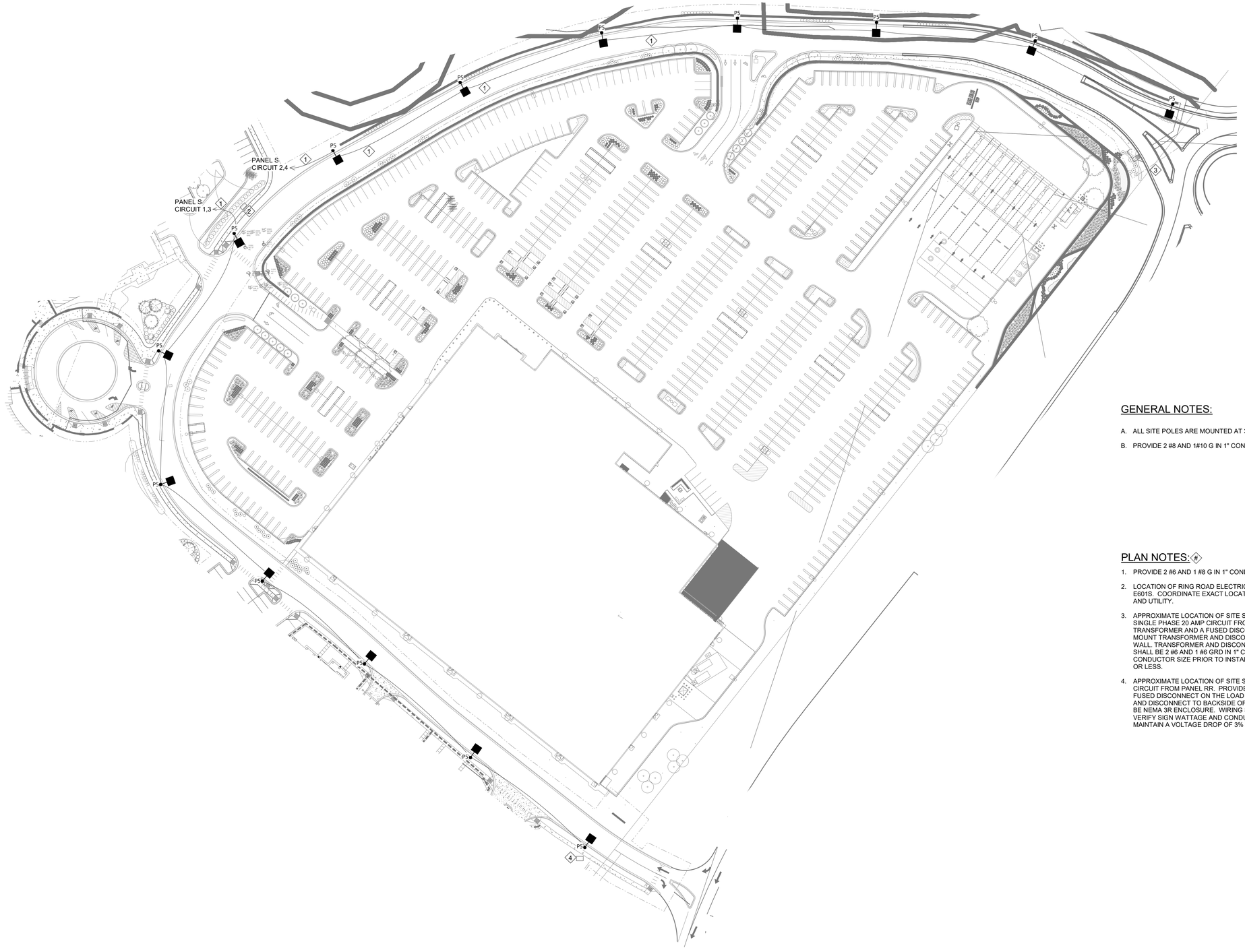

1 ELECTRICAL SITE PLAN - VIEW 2
1" = 60'-0"

GENERAL NOTES:

A. ALL SITE POLES ARE MOUNTED AT 30'-0" AFG.

B. PROVIDE 2 #8 AND 1#10 G IN 1" CONDUIT UNLESS NOTED OTHERWISE.

PLAN NOTES: (#)

1. PROVIDE 2 #6 AND 1 #8 G IN 1" CONDUIT.
2. LOCATION OF RING ROAD ELECTRICAL SERVICE. REFER TO DETAIL 1 ON DRAWING E601S. COORDINATE EXACT LOCATION OF SERVICE EQUIPMENT WITH ARCHITECT AND UTILITY.
3. APPROXIMATE LOCATION OF SITE SIGN ON RETAINING WALL. PROVIDE A 240VOLT SINGLE PHASE 20 AMP CIRCUIT FROM PANEL RR. PROVIDE A 240 VOLT TO 120VOLT TRANSFORMER AND A FUSED DISCONNECT ON THE LOAD SIDE OF TRANSFORMER. MOUNT TRANSFORMER AND DISCONNECT TO RETAINING WALL. PAINT TO MATCH WALL. TRANSFORMER AND DISCONNECT SHALL BE NEMA 3R ENCLOSURE. WIRING SHALL BE 2 #6 AND 1 #6 GRD IN 1" CONDUIT. VERIFY SING WATTAGE AND CONDUCTOR SIZE PRIOR TO INSTALLATION TO MAINTAIN A VOLTAGE DROP OF 3% OR LESS.
4. APPROXIMATE LOCATION OF SITE SIGN. PROVIDE A 240VOLT SINGLE PHASE 20 AMP CIRCUIT FROM PANEL RR. PROVIDE A 240 VOLT TO 120VOLT TRANSFORMER AND A FUSED DISCONNECT ON THE LOAD SIDE OF TRANSFORMER. MOUNT TRANSFORMER AND DISCONNECT TO BACKSIDE OF SIGN. TRANSFORMER AND DISCONNECT SHALL BE NEMA 3R ENCLOSURE. WIRING SHALL BE 2 #6 AND 1 #6 GRD IN 1" CONDUIT. VERIFY SIGN WATTAGE AND CONDUCTOR SIZE PRIOR TO INSTALLATION TO MAINTAIN A VOLTAGE DROP OF 3% OR LESS.

PLAN NORTH | TRUE NORTH

4/15/2022 12:30:36 AM

CONTINENTAL PROPERTIES
CONTINENTAL 000123 FUND LLC
W134 N8675 EXECUTIVE PARKWAY
MENOMONEE FALLS, WI 53051
262.502.5500 * FAX 262.502.5522

RING & DUCHATEAU
17400 West Capitol Drive, Brookfield, WI 53045
301 South Blount Street, Suite 101 - Madison, WI 53703
Phone: 414.778.1700 / Fax: 414.778.2360 / r-d@ringdu.com

THIS BAR IS 1" LONG.
IF IT MEASURES ANYTHING OTHER THAN 1"
ADJUST SCALE ACCORDINGLY.
R&D Project No.: 221181.00

Revisions

CONSTRUCTION DOCUMENTS

Drawing Date
03/28/2022

SPRINGS AT McKNIGHT LAKE
NORTH CHESNUT STREET & OAKRIDGE DRIVE,
CHASKA, MINNESOTA 55218

Project No.
221001.06

Sheet Title
ELECTRICAL SITE PLAN - VIEW 2

Sheet No.
E101S

GENERAL NOTES:

A. ALL SITE POLES ARE MOUNTED AT 25'-0" AFG.

B. WIRING SHALL BE 2 #10 AND 1 #10 GRD IN 1" CONDUITS.

C. VERIFY VOLTAGE DROP DOES NOT EXCEED 3% BASED ON ACTUAL CONDUCTOR ROUTING.

PLAN NOTES: (#)

1. APPROXIMATE LOCATION OF ELECTRICAL SERVICE FOR NORTH LOTS. REFER TO DETAIL 3 ON E601S.

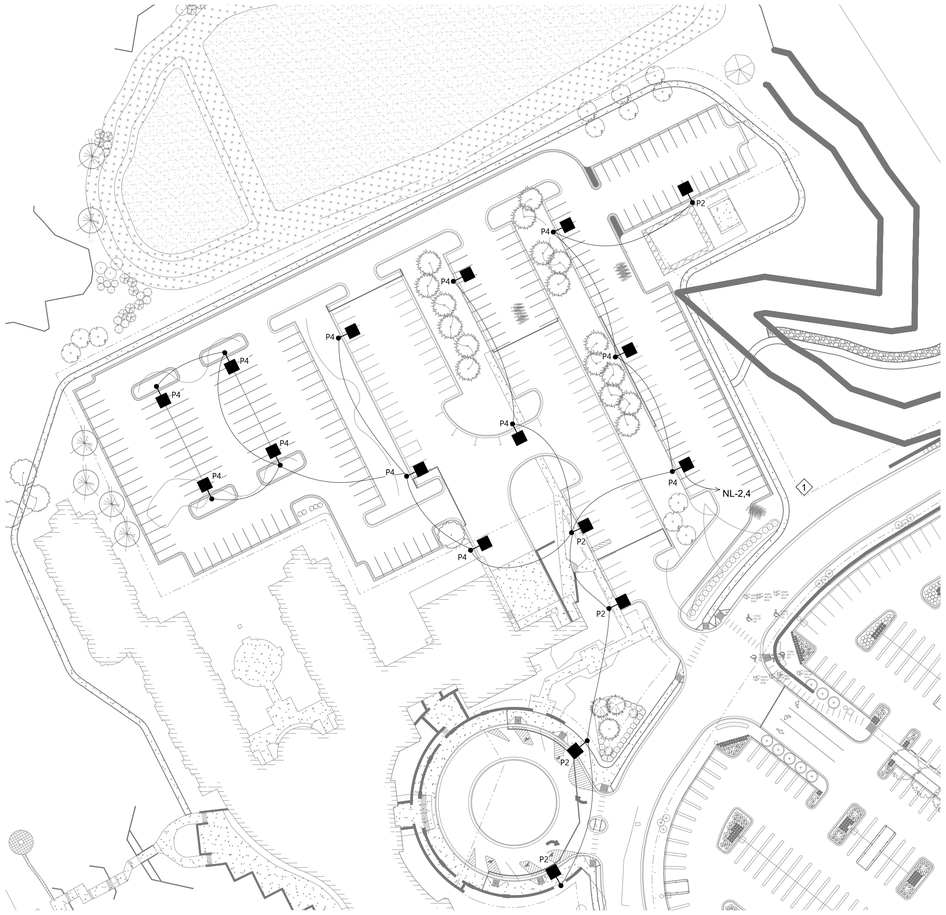

1 ELECTRICAL SITE PLAN - VIEW 3
1" = 60'-0"

PLAN NORTH

TRUE NORTH

CONTINENTAL PROPERTIES
CONTINENTAL 000123 FUND LLC
W134 N8675 EXECUTIVE PARKWAY
MENOMONEE FALLS, WI 53051
262.502.5500 * FAX 262.502.5522

RING & DUCHATEAU
17400 West Capitol Drive, Brookfield, WI 53045
301 South Blount Street, Suite 101 - Madison, WI 53703
Phone: 414.778.1700 / Fax: 414.778.2360 / r-d@ringdu.com

THIS BAR IS 1" LONG.
IF IT MEASURES ANYTHING OTHER THAN 1"
ADJUST SCALE ACCORDINGLY.
R&D Project No.: 221181.00

Revisions

CONSTRUCTION DOCUMENTS

Drawing Date
03/28/2022

SPRINGS AT McKNIGHT LAKE
NORTH CHESNUT STREET & OAKRIDGE DRIVE,
CHASKA, MINNESOTA 55218

Project No.
221001.06

Sheet Title
ELECTRICAL SITE PLAN - VIEW 3

Sheet No.
E103S

4/14/2022 11:09:33 PM

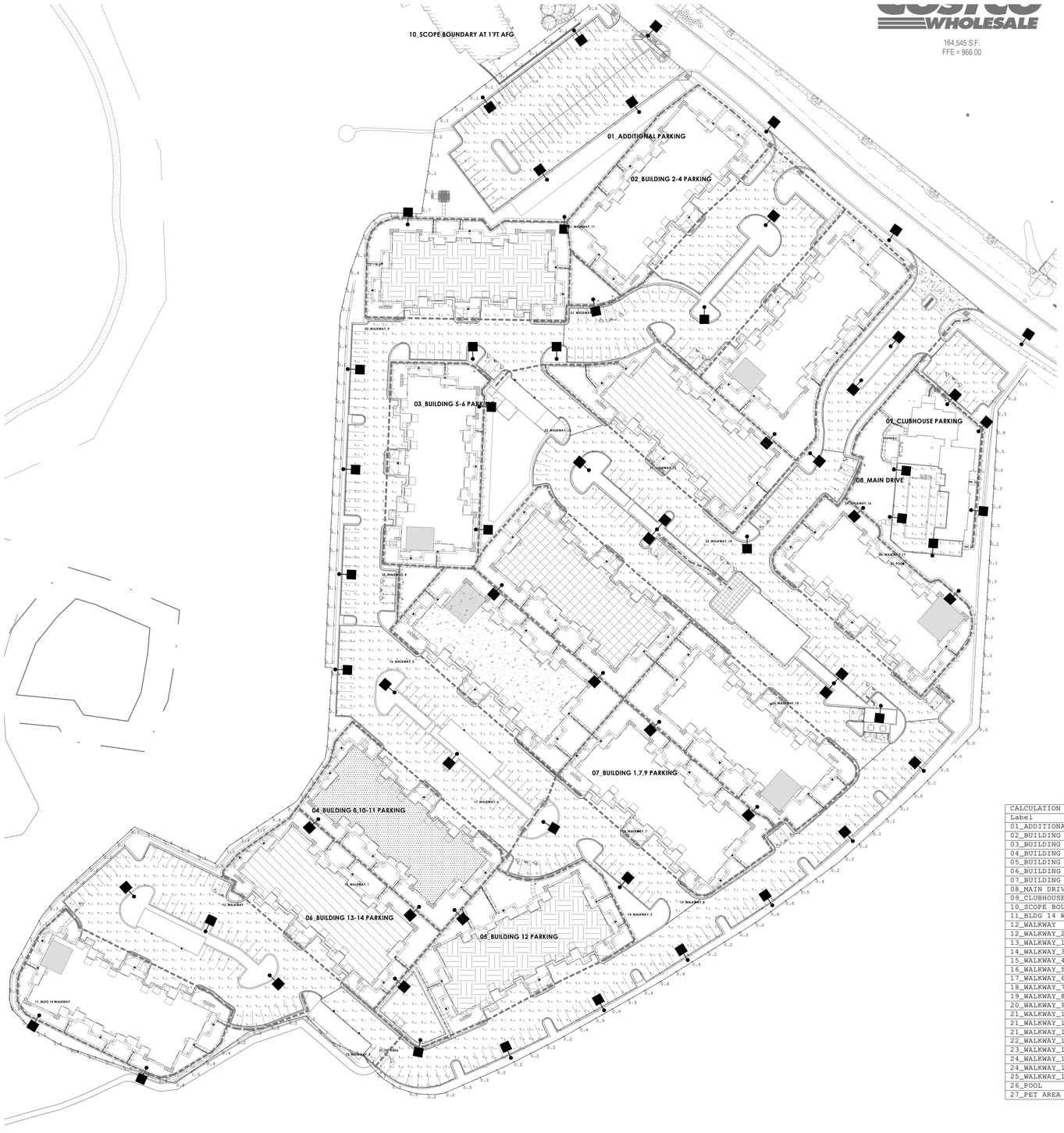

GENERAL NOTES:

A. ALL SITE LIGHTING POLES ARE MOUNTED AT 25'-0" AFG.

B. ALL PEDESTRIAN POLES ARE MOUNTED AT 15'-0" AFG.

C. ALL BUILDING MOUNTED LIGHTING SHOWN ON SHEET E100S IS INCLUDED IN THIS PHOTOMETRIC CALCULATION.

D. THE RESULTS OF THIS STUDY ARE TO BE VIEWED ONLY AS AN INDICATION OF POSSIBLE PERFORMANCE. DUE TO VARIATIONS IN LED BOARDS, DRIVERS, MANUFACTURING, LINE VOLTAGE, AND SITE CONDITIONS, A GUARANTEED LEVEL OF PERFORMANCE IS NOT POSSIBLE AND IS NOT REPRESENTED BY THIS ANALYSIS.

E. CALCULATION IS MODELED USING A LIGHT LOSS FACTOR OF .85 TO INDICATE MAINTAINED ILLUMINANCE VALUES.

CALCULATION SUMMARY							
Label	CalcType	Units	Avg	Max	Min	Avg/Min	Max/Min
01_ADDITIONAL PARKING	Illuminance	Fc	0.58	1.1	0.2	2.90	5.50
02_BUILDING 2-4 PARKING	Illuminance	Fc	0.60	2.2	0.1	6.00	22.00
03_BUILDING 5-6 PARKING	Illuminance	Fc	0.89	4.0	0.3	2.97	13.33
04_BUILDING 8,10-11 PARKING	Illuminance	Fc	0.71	3.7	0.1	7.10	37.00
05_BUILDING 12 PARKING	Illuminance	Fc	0.87	3.8	0.2	4.35	19.00
06_BUILDING 13-14 PARKING	Illuminance	Fc	0.65	3.7	0.2	3.25	18.50
07_BUILDING 1,7,9 PARKING	Illuminance	Fc	0.83	3.6	0.1	8.30	36.00
08_MAIN DRIVE	Illuminance	Fc	0.67	1.8	0.1	6.70	18.00
09_CLUBHOUSE PARKING	Illuminance	Fc	0.68	1.6	0.2	3.40	8.00
10_SCOPE BOUNDARY AT 1'FT AFG	Illuminance	Fc	0.42	4.0	0.0	N.A.	N.A.
11_BLDG 14 WALKWAY	Illuminance	Fc	1.74	5.3	0.2	8.70	26.50
12_WALKWAY	Illuminance	Fc	1.50	3.1	0.4	3.75	7.75
12_WALKWAY_2	Illuminance	Fc	1.26	4.9	0.2	6.30	24.50
13_WALKWAY_1	Illuminance	Fc	2.10	5.1	0.5	4.20	10.20
14_WALKWAY_3	Illuminance	Fc	1.16	3.4	0.2	5.80	17.00
15_WALKWAY_4	Illuminance	Fc	1.85	5.3	0.4	4.63	13.25
16_WALKWAY_5	Illuminance	Fc	1.39	3.0	0.3	4.63	10.00
17_WALKWAY_6	Illuminance	Fc	1.80	4.7	0.3	6.00	15.67
18_WALKWAY_7	Illuminance	Fc	1.81	4.7	0.3	6.03	15.67
19_WALKWAY_8	Illuminance	Fc	1.57	3.8	0.3	5.23	12.67
20_WALKWAY_9	Illuminance	Fc	1.75	4.8	0.2	8.75	24.00
21_WALKWAY_10	Illuminance	Fc	1.87	3.0	0.2	9.35	15.00
21_WALKWAY_11	Illuminance	Fc	0.85	4.3	0.0	N.A.	N.A.
21_WALKWAY_12	Illuminance	Fc	1.54	5.1	0.2	7.70	25.50
22_WALKWAY_13	Illuminance	Fc	1.37	3.1	0.3	4.57	10.33
23_WALKWAY_14	Illuminance	Fc	1.75	3.2	0.7	2.50	4.57
24_WALKWAY_15	Illuminance	Fc	2.02	5.5	0.4	5.05	13.75
24_WALKWAY_16	Illuminance	Fc	1.08	3.4	0.5	2.16	6.80
25_WALKWAY_17	Illuminance	Fc	1.81	4.7	0.6	3.02	7.83
26_POOL	Illuminance	Fc	1.37	5.6	0.1	13.70	56.00
27_PET AREA	Illuminance	Fc	0.75	2.8	0.4	1.88	7.00

1 ELECTRICAL PHOTOMETRIC PLAN - VIEW 1
1" = 60'-0"

PLAN NORTH

TRUE NORTH

4/19/2022 10:18:32 AM

CONTINENTAL PROPERTIES
CONTINENTAL 000123 FUND LLC
W134 N8675 EXECUTIVE PARKWAY
MENOMONEE FALLS, WI 53051
262.502.5500 * FAX 262.502.5522

RING & DUCHATEAU
17400 West Capitol Drive, Brookfield, WI 53045
301 South Blount Street, Suite 101 - Madison, WI 53703
Phone: 414.778.1700 / Fax: 414.778.2360 / r-d@ringdu.com

THIS BAR IS 1" LONG.
IF IT MEASURES ANYTHING OTHER THAN 1"
ADJUST SCALE ACCORDINGLY.
R&D Project No.: 221181.00

Revisions

CONSTRUCTION DOCUMENTS

Drawing Date
03/28/2022

SPRINGS AT McKNIGHT LAKE
NORTH CHESNUT STREET & OAKRIDGE DRIVE,
CHASKA, MINNESOTA 55218

Project No.
221001.06

Sheet Title
ELECTRICAL PHOTOMETRIC PLAN - VIEW 1

Sheet No.
E201S

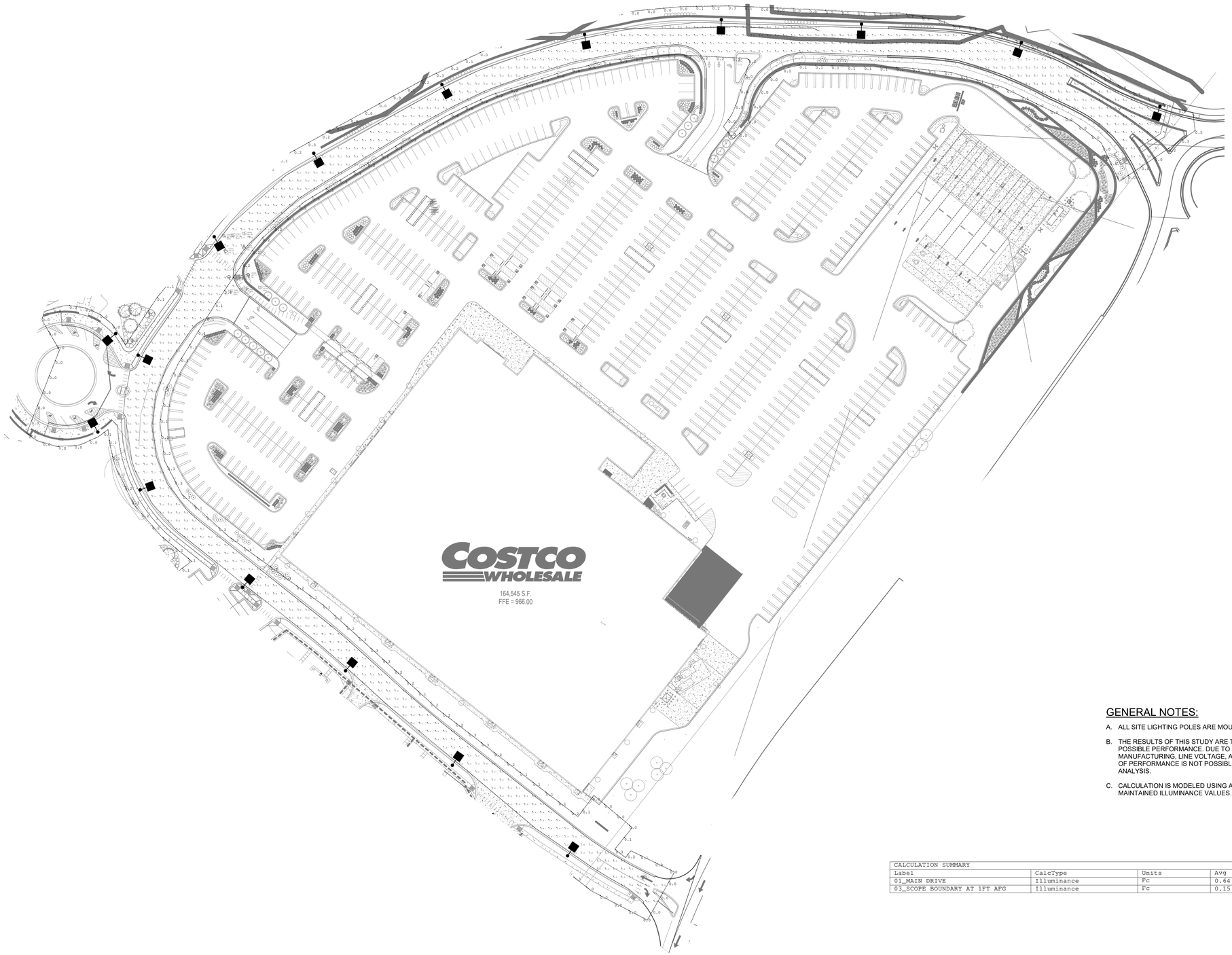

1 ELECTRICAL PHOTOMETRIC PLAN - VIEW 2
1" = 60'-0"

GENERAL NOTES:

A. ALL SITE LIGHTING POLES ARE MOUNTED AT 30'-0" AFG.

B. THE RESULTS OF THIS STUDY ARE TO BE VIEWED ONLY AS AN INDICATION OF POSSIBLE PERFORMANCE. DUE TO VARIATIONS IN LED BOARDS, DRIVERS, MANUFACTURING, LINE VOLTAGE, AND SITE CONDITIONS, A GUARANTEED LEVEL OF PERFORMANCE IS NOT POSSIBLE AND IS NOT REPRESENTED BY THIS ANALYSIS.

C. CALCULATION IS MODELED USING A LIGHT LOSS FACTOR OF .85 TO INDICATE MAINTAINED ILLUMINANCE VALUES.

CALCULATION SUMMARY

Label	CalcType	Units	Avg	Max	Min	Avg/Min	Max/Min
01_MAIN DRIVE	Illuminance	Fc	0.64	1.6	0.0	N.A.	N.A.
03_SCOPE BOUNDARY AT 1FT AFG	Illuminance	Fc	0.15	1.2	0.0	N.A.	N.A.

PLAN NORTH

TRUE NORTH

4/15/2022 12:30:37 AM

CONTINENTAL PROPERTIES
CONTINENTAL 000123 FUND LLC
W134 N8675 EXECUTIVE PARKWAY
MENOMONEE FALLS, WI 53051
262.502.5500 * FAX 262.502.5522

RING & DUCHATEAU
17400 West Capitol Drive, Brookfield, WI 53045
301 South Blount Street, Suite 101 - Madison, WI 53703
Phone: 414.778.1700 / Fax: 414.778.2360 / r-d@ringdu.com

THIS BAR IS 1" LONG.
IF IT MEASURES ANYTHING OTHER THAN 1"
ADJUST SCALE ACCORDINGLY.
R&D Project No.: 221181.00

Revisions

CONSTRUCTION DOCUMENTS

Drawing Date
03/28/2022

SPRINGS AT McKNIGHT LAKE
NORTH CHESNUT STREET & OAKRIDGE DRIVE,
CHASKA, MINNESOTA 55218

Project No.
221001.06

Sheet Title
ELECTRICAL PHOTOMETRIC PLAN - VIEW 2

Sheet No.
E202S

GENERAL NOTES:

A. ALL SITE LIGHTING POLES ARE MOUNTED AT 25'-0" AFG.

B. THE RESULTS OF THIS STUDY ARE TO BE VIEWED ONLY AS AN INDICATION OF POSSIBLE PERFORMANCE. DUE TO VARIATIONS IN LED BOARDS, DRIVERS, MANUFACTURING, LINE VOLTAGE, AND SITE CONDITIONS, A GUARANTEED LEVEL OF PERFORMANCE IS NOT POSSIBLE AND IS NOT REPRESENTED BY THIS ANALYSIS.

C. CALCULATION IS MODELED USING A LIGHT LOSS FACTOR OF .85 TO INDICATE MAINTAINED ILLUMINANCE VALUES.

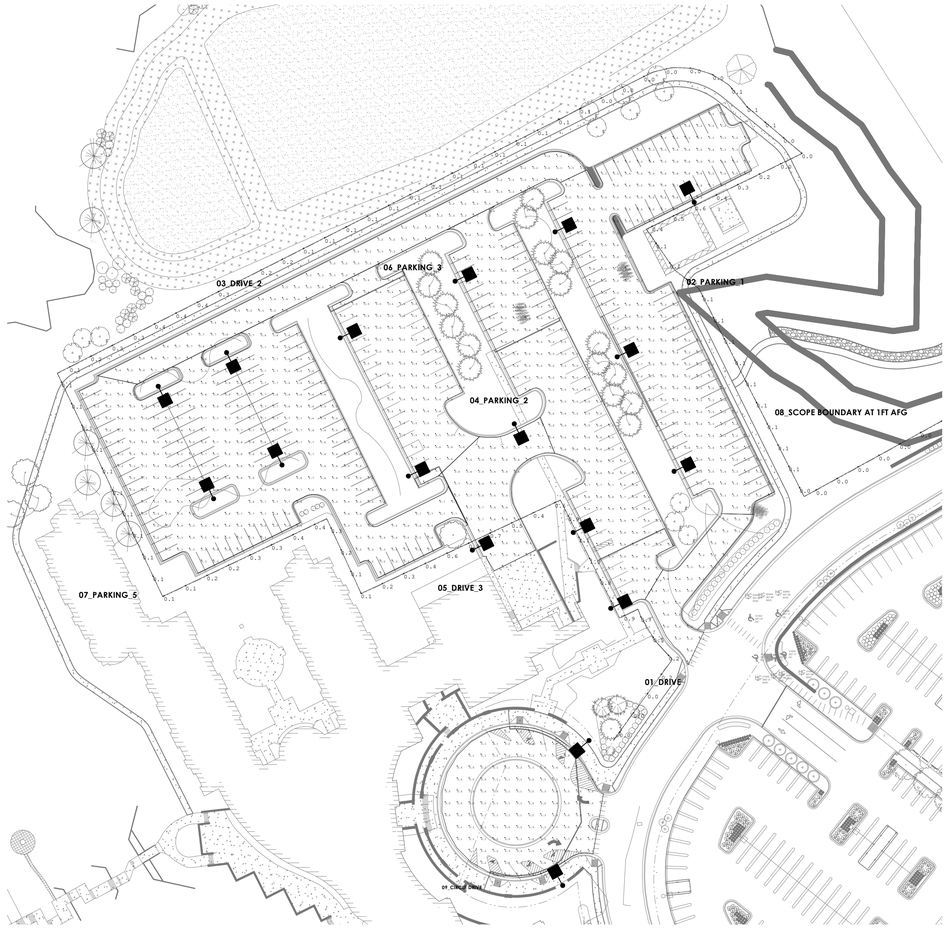

1 ELECTRICAL PHOTOMETRIC PLAN - VIEW 3
1" = 60'-0"

PLAN NORTH

TRUE NORTH

CALCULATION SUMMARY							
Label	CalcType	Units	Avg	Max	Min	Avg/Min	Max/Min
01_DRIVE	Illuminance	Fc	0.34	0.9	0.1	3.40	9.00
02_PARKING_1	Illuminance	Fc	0.41	1.0	0.1	4.10	10.00
03_DRIVE_2	Illuminance	Fc	0.39	0.8	0.2	1.95	4.00
04_PARKING_2	Illuminance	Fc	0.61	1.1	0.4	1.53	2.75
05_DRIVE_3	Illuminance	Fc	0.63	0.9	0.4	1.58	2.25
06_PARKING_3	Illuminance	Fc	0.48	0.8	0.3	1.60	2.67
07_PARKING_5	Illuminance	Fc	0.57	1.0	0.2	2.85	5.00
08_SCOPE BOUNDARY AT 1FT AFG	Illuminance	Fc	0.22	1.1	0.0	N.A.	N.A.
09_CIRCLE DRIVE	Illuminance	Fc	0.31	0.9	0.0	N.A.	N.A.

CONTINENTAL PROPERTIES

CONTINENTAL 000123 FUND LLC
W134 N8675 EXECUTIVE PARKWAY
MENOMONEE FALLS, WI 53051
262.502.5500 * FAX 262.502.5522

RING & DUCHATEAU
17400 West Capitol Drive, Brookfield, WI 53045
301 South Blount Street, Suite 101 - Madison, WI 53703
Phone: 414.778.1700 / Fax: 414.778.2360 / r-d@ringdu.com

THIS BAR IS 1" LONG.
IF IT MEASURES ANYTHING OTHER THAN 1"
ADJUST SCALE ACCORDINGLY.
R&D Project No.: 221181.00

Revisions

CONSTRUCTION DOCUMENTS

Drawing Date
03/28/2022

SPRINGS AT McKNIGHT LAKE
NORTH CHESNUT STREET & OAKRIDGE DRIVE,
CHASKA, MINNESOTA 55218

Project No.
221001.06

Sheet Title
ELECTRICAL PHOTOMETRIC PLAN - VIEW 3

Sheet No.
E203S

4/14/2022 11:53:59 PM

Project		Catalog #		Type	
Prepared by		Notes		Date	



Lumark

Prevail / Prevail XL Discrete LED

Area / Site Luminaire

Product Features

LumeGen Technology

Interactive Menu

- Ordering Information page 2
- Mounting Details page 3
- Optical Configurations page 3
- Product Specifications page 4
- Energy and Performance Data page 4
- Control Options page 5

Quick Facts

- Direct-mounted discrete light engine for improved optical uniformity and visual comfort
- Lumen packages range from 7,500 - 41,000 nominal lumens (50W - 300W)
- Replaces 70W up to 1,000W HID equivalents
- Efficacies up to 148 lumens per watt
- Standard universal quick mount arm with universal drill pattern

Product Certifications

ISTI, cULus Listed, DLC, DLC Premium, FC Compliant, Buy American, IP66, 5 Year Limited Warranty, ARRA

Connected Systems

- WaveLinx
- Enlighted

Dimensional Details

Prevail

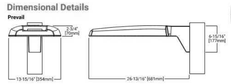

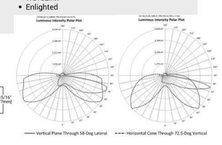

Prevail XL

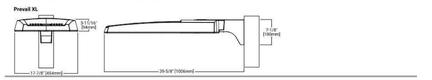

FIXTURES "A" AND "B" AND "E"

Lumark

PRV / PRV-XL Prevail Discrete

Ordering Information

SAMPLE NUMBER: **PRV-XL-PA4B-740-U-T4W-BZ**

Product Family [1,2]	Light Engine		Color Temperature	Voltage	Distribution	Mounting (Included)	Finish
PRV=Prevail	Configuration	Drive Current*	740=70CRI, 4000K	U=Universal, 120-277V	T2R=Type II Roadway	[Blank]=Standard Versatile Arm	AP=Gloy
	PA1=1 Panel, 24 LED Rectangle	A=145mA Nominal	730=70CRI, 3000K	H=High Voltage, 347-480V	T2S=Type II Short	**WA**=Mast Arm	BK=Black
	PA2=2 Panels, 48 LED Rectangles	B=185mA Nominal	735=70CRI, 3500K	1=347V	T3=Type III	**WM**=Wall Mount Arm	BZ=Bronze
PRV-XL=Prevail XL	**PA3**=3 Panels, 72 LED Rectangles		730=70CRI, 5000K	4=480V *	T4W=Type IV Wide		DP=Dark Platinum
	PA4=4 Panels, 96 LED Rectangles				SWD=Type V Square Wide		GM=Graphite Metallic
							WH=White

Options (Add as Suffix)	Accessories (Order Separately) [3]
10K=10kV UL 1449 Fused Surge Protective Device	**PRVWM-EX**=Wall Mount Kit [4]
20MSP=20kV MOV Surge Protective Device	**PRVEA-EX**=Universal Arm Mounting Kit [4]
NA=347V High Ambient Temperature	**PRVSQA-EX**=Square Arm Mounting Kit [4]
HSS=House Side Shield (Factory Installed) [5]	**PRVWLMA-EX**=Wall Arm Mounting Kit (for Prevail XL) [4]
L90=Optics Rotated 90° Left	**PRVSLA-EX**=Standard Arm Mounting Kit (for Prevail XL) [4]
R90=Optics Rotated 90° Right	**WA1010-XX**=Single Tenon Adapter for 2-1/2" O.D. Tenon
PE=NEMA 7 PE Photoelectric Photocontrol Receptacle [6]	**WA2010-XX**=Single Tenon Adapter for 3-1/2" O.D. Tenon
PER=NEMA 7 PER Twistlock Photocontrol Receptacle [6]	**WA1012-XX**=Single Tenon Adapter for 2-3/8" O.D. Tenon
SPD1=Dimming Occupancy Sensor with Bluetooth Interface, 8' Mounting [7]	**WA1810-XX**=(2@180° Tenon Adapter for 2-3/8" O.D. Tenon
SPD2=Dimming Occupancy Sensor with Bluetooth Interface, 20' Mounting [7]	**WA2020-XX**=(2@180° Tenon Adapter for 3-1/2" O.D. Tenon
SPD4=Dimming Occupancy Sensor with Bluetooth Interface, 31'-40' Mounting [7]	**HSS-UP**=House Side Shield, Horizontal Panel [5,10]
MSDSM-L80=Motion Sensor for Dimming Operation, Up to 8' Mounting Height [7,8,9]	**GALWA1010**=Photocontrol Shorting Cap
MSDSM-L40=Motion Sensor for Dimming Operation, 9'-20' Mounting Height [7,8,9]	**GALWA1810**=NEMA Photocontrol - 120V
MSDSM-L40=Motion Sensor for Dimming Operation, 21'-40' Mounting Height [7,8,9]	**GALWA2010**=NEMA Photocontrol - Up to 105-285V
MS-L80=Motion Sensor for ON/OFF Operation, Up to 8' Mounting Height [7,8,9]	**GALWA1012**=NEMA Photocontrol - 347V
MS-L20=Motion Sensor for ON/OFF Operation, 9'-20' Mounting Height [7,8,9]	**GALWA1022**=NEMA Photocontrol - 480V
MS-L40=Motion Sensor for ON/OFF Operation, 21'-40' Mounting Height [7,8,9]	**FSB-10R**=Wireless Configuration Tool for Motion Sensor [8]
ZW=Wireless enabled 4 PIN Twistlock Receptacle [7,8,9,11]	**SMPSD-8R**=WaveLinx Wireless Sensor, 8' - 15' Mounting Height [7,8,9]
ZW=Wireless enabled 4 PIN Twistlock Receptacle [7,8,9,11]	**SMPSD-20R**=WaveLinx Wireless Sensor, 15' - 40' Mounting Height [7,8,9]
SMPSHCE=Wireless Wireless Sensor, 7' - 15' Mounting Height [7,8,9,11,12]	**WDLC-7P-10A-W**=WaveLinx Outdoor Control Module (7-PIN) [8]
LMS-LR=Enlighted Wireless Sensor, Wide Lens for 8' - 15' Mounting Height [7,8,9]	
LMS-LR=Enlighted Wireless Sensor, Wide Lens for 15' - 40' Mounting Height [7,8,9]	
LMS-LN=Enlighted Wireless Sensor, Narrow Lens for 15' - 40' Mounting Height [7,8,9]	
(See Table Below)=LumenSafe Integrated Network Security Camera [7,8,13]	
CCI=Coastal Construction [14]	

NOTES
1. Design lights Consortium® Qualified. Refer to www.designlights.org DesignMix Products List under Family Models for details.
2. Not all combinations may be available. Refer to configuration tool for more options. Consult factory for any questions. Installation instructions and pole white paper WP512005EN for additional support information.
3. Nominal drive current; shown here. For actual drive current by configuration, refer to Power and Lumens table.
4. Only for use with 4000 Wye systems. For NEC, not for use with ungrounded systems, impedance grounded systems or corner grounded systems (commonly known as Three Phase Three Wire Delta, Three Phase High Leg Delta and Three Phase Corner; Ungrounded).
5. House Side Shield not for use with SMQ distributions.
6. If High Voltage (H) is specified, use a photocontrol that matches the input voltage used (either 347V or 480V).
7. Sensor requires a minimum of 4 fixtures to be ordered for proper operation. Not for use in CCI.
8. Controls system is not available with photosensor receptacle (PE or PER) or when control is by others (MS, DM, DS or LMS).
9. Utilizes the Watchtower sensor FSP-211.
10. Not recommended for use in applications where lamp sensitive when operating below -20°C (-4°F).
11. For the Bronze to be field configurable, requires WAC Gateway components WGC 1G2 and WPOE-120 as appropriate quantities. Only compatible with WaveLinx system and software and requires system components to be installed for operation. See website for more WaveMax application information.
12. Not available with Emergency (E20WC).
13. Requires 4 PIN Receptacle; recepticle (ZD or ZW) option.
14. Enlightened wireless sensors are factory installed and require network components (APP-ERP-1, APP-ERP-CAM-1, and CMP-PoE24-1) in appropriate quantities. See website for application information.
15. Not available with High Voltage (U, H or 1) or 480V.
16. Not available with High Voltage (U, H or 1) or 120V.
17. Not available with 347V or 480V.
18. Only available in PRV configurations PA3 & or PA2S.
19. Not to be ordered with DCR (Dimming Occupancy Sensor) or SCR (Multi-Switchable occupancy (L, D, S or R). Refer to Hoover Side Shield reference table for details.
20. Must order with separate line item for shipment with fixture. Consult factory for other options.
21. Requires 7-PIN NEMA twistlock photocontrol receptacle (PER7) option. The WDLC-7 cannot be used in conjunction with other controls systems (MS, DM, DS or LMS). Only for use at 120-347V.
22. Coastal construction finish salt spray tested to over 5,000 hours per ASTM B117, with a scribe rating of 9 per ASTM D1654.
23. Smart device with weather application required to change system defaults. See controls section for details.

LumenSafe Integrated Network Security Camera Technology Options (Add as Suffix)

Product Family	Camera Type	Data Backhaul
L=LumenSafe Technology	**D**=Dome Camera	**C**=Cellular, Customer Installed SIM Card **4**=Cellular, Factory Installed AT&T SIM Card **V**=Cellular, Factory Installed Verizon SIM Card **S**=Cellular, Factory Installed Sprint SIM Card
		E=Ethernet Networking

Power and Lumens (PRV)

Light Engine		740	740 B	740 A	740 E
Power (Watts)		88	96	116	141
Input Current @ 120V (A)		0.75	0.82	0.98	1.19
Input Current @ 277V (A)		0.33	0.35	0.42	0.52
Input Current @ 347V (A)		0.27	0.29	0.33	0.42
Input Current @ 480V (A)		0.22	0.21	0.24	0.32
Distribution					
Type II	4000K/5000K Lumens	13,176	9,957	13,748	19,063
	Bulb Rating	91 (81 CG)	83 (74 CG)	83 (74 CG)	84 (74 CG)
	Lumens per Watt	149	120	141	135
	3000K Lumens [15]	12,895	9,677	14,345	17,511
	4000K/5000K Lumens	11,844	9,758	13,984	18,435
	Bulb Rating	89 (80 CG)	84 (76 CG)	85 (84 CG)	89 (84 CG)
	Lumens per Watt	135	102	120	131
	3000K Lumens [15]	9,873	8,000	14,135	17,096

TYPE OD - APARTMENTS

D-Series Size 1

LED Wall Luminaire

d*series

Specifications

Luminaire

Width:	13-3/4" (34.9 cm)	**Weight:**	12 lbs (5.4 kg)
Depth:	10" (25.4 cm)		
Height:	6-3/8" (16.2 cm)		

Back Box (BBW, ELCW)

Width:	13-3/4" (34.9 cm)	**BBW Weight:**	5 lbs (2.3 kg)
Depth:	4" (102 cm)	**ELCW Weight:**	10 lbs (4.5 kg)
Height:	6-3/8" (16.2 cm)		

For 3/4" NPT side-entry conduit (ELCW only)

Catalog Number
Notes
Type

Introduction

The D-Series Wall luminaire is a stylish, fully integrated LED solution for building-mount applications. It features a sleek, modern design and is carefully engineered to provide long-lasting, energy-efficient lighting with a variety of optical and control options for customized performance.

With an expected service life of over 20 years of nighttime use and up to 74% in energy savings over comparable 250W metal halide luminaires, the D-Series Wall is a reliable, low-maintenance lighting solution that produces sites that are exceptionally illuminated.

Ordering Information

EXAMPLE: DSXW1 LED 20C 1000 40K T3M MVOLT DDBTXD

DSXW1 LED								
Series	**LEDs**	**Drive Current**	**Color Temperature**	**Distribution**	**Voltage**	**Mounting**	**Control Options**	
DSXW1 LED	10C 10 LEDs (one engine)	350 350 mA	30K 3000 K	T2S Type II Short	MVOLT [1]	**Shipped included**	**Shipped included**	
	20C 20 LEDs (two engines) [2]	530 530 mA	40K 4000 K	T2M Type II Medium	120 [4]	(blank) Surface mounting bracket	PE Photoelectric cell, button type [5]	
	30C 30 LEDs (three engines)	700 700 mA	50K 5000 K	T3S Type III Short	208 [3]		DMG 0-10v dimming wires pulled outside fixture (for use with an external control, ordered separately) [6]	
		1000 1000 mA (1 A) [3]	AMBPC Amber phosphor converted	T3M Type III Medium	240 [3]	**Shipped separately** [7]	PIR 180° motion/ambient light sensor, <15' mtg ht [8,9]	
				T4M Type IV Medium	277 [4]	BBW Surface-mounted back box (for conduit entry) [10]	PIRH 180° motion/ambient light sensor, 15-30' mtg ht [8,9]	
				TFTM Forward Throw Medium	347 [4,11]		PIR1FC3V Motion/ambient sensor, 8-15' mounting height, ambient sensor enabled at 1fc [8,9]	
				ASYDF Asymmetric diffuse	480 [4,11]		ELCW Emergency battery backup (includes external component enclosure, non-CEC compliant) [12]	

Other Options		Finish (required)			
Shipped installed	**Shipped separately** [7]	DDBXD Dark bronze	DCSXD Sandstone	DWHGXD Textured white	
SF Single fuse (120, 277, 347V) [13]	BSW Bird-deterrent spikes	DBLXD Black	DDBTXD Textured dark bronze	DSSTXD Textured sandstone	
DF Double fuse (208, 240 or 480V) [13]	WG Wire guard	DNAXD Natural aluminum	DBLBXD Textured black		
HS House-side shield [14]	VG Vandal guard	DWHXD White	DNATXD Textured natural aluminum		
SPD Separate surge protection [15]	DDL Diffused drop lens				

Accessories

Ordered and shipped separately.

DSHM1E	House-side shield (one per light engine)
DSHM1BW1	Bird-deterrent spikes
DSWHM2-E	Wire guard accessory
DSVHT4S-E	Vandal guard accessory

NOTES
1. 20C, 1000 is not available with PIR, PIRH, PIR1FC3V or PIRH1FC3V.
2. MVOLT driver operates on any line voltage from 120-277V (50/60 Hz).
3. Single fuse (SF) requires 120, 277 or 347 voltage option. Double fuse (DF) requires 208, 240 or 480 voltage option.
4. Only available with 20C, 700mA or 1000mA. Not available with PIR or PIRH.
5. Back box ships installed for future. Cannot be field installed. Cannot be ordered as an accessory.
6. Not available with 347 or 480 voltage options. Not available with 347 or 480 voltage option. Not available with motion/ambient light sensors (PIR or PIRH).
7. Reference Motion Sensor table on page 3.
8. Cold weather (-20C) rated. Not compatible with conduit entry applications. Not available with BBW mounting option. Not available with fusing. Not available with 347 or 480 voltage options. Emergency components located in back box housing. Emergency mode IES files located on product page at www.lithonia.com.
9. Not available with SPD.
10. Not available with ELCW.
11. Also available as a separate accessory; see Accessories information.
12. Not available with ELCW.

©2013-2019 Acuity Brands Lighting, Inc. All rights reserved.

TYPE OE - GARAGES

D-Series Size 2

LED Wall Luminaire

d*series

Specifications

Luminaire

Width:	18-1/2" (47.0 cm)	**Weight:**	21 lbs (9.5 kg)
Depth:	10" (25.4 cm)		
Height:	7-5/8" (19.4 cm)		

Back Box (BBW)

Width:	5-1/2" (14.0 cm)	**BBW Weight:**	1 lbs (0.5 kg)
Depth:	1-1/2" (3.8 cm)		
Height:	4" (10.2 cm)		

For 3/4" NPT side-entry conduit (BBW only)

Catalog Number
Notes
Type

A+ Capable Luminaire

This item is an A+ capable luminaire, which has been designed and tested to provide consistent color appearance and system-level interoperability.

- All configurations of this luminaire meet the Acuity Brands' specification for chromatic consistency
- This luminaire is A+ Certified when ordered with DTL® controls marked by a shaded background. DTL DLL equipped luminaires meet the A+ specification for luminaire to photocontrol interoperability1
- This luminaire is part of an A+ Certified solution for ROAM® or XPoint™ Wireless control networks, providing out-of-the-box control compatibility with simple commissioning, when ordered with drivers and control options marked by a shaded background2

To learn more about A+, visit www.acuitybrands.com/aplus.

1. See ordering tree for details.
2. A+ Certified Solutions for ROAM require the order of one ROAM node per luminaire. Sold Separately: Link to Roam; Link to DTL DLL

A+ Capable options indicated by this color background.

Ordering Information

EXAMPLE: DSXW2 LED 30C 700 40K T3M MVOLT DDBTXD

DSXW2 LED							
Series	**LEDs**	**Drive Current**	**Color temperature**	**Distribution**	**Voltage**	**Mounting**	**Control Options**
DSXW2 LED	20C 20 LEDs (two engines)	350 350 mA	30K 3000 K	T2S Type II Short	MVOLT [1]	**Shipped included**	**Shipped included**
	30C 30 LEDs (three engines)	530 530 mA	40K 4000 K	T2M Type II Medium	120 [4]	(blank) Surface mounting bracket	PE Photoelectric cell, button type [5]
		700 700 mA	50K 5000 K	T3S Type III Short	208 [3]		PER NEMA twist-lock receptacle only (control ordered separately) [6]
		1000 1000 mA (1 A)	AMBPC Amber phosphor converted	T3M Type III Medium	240 [3]	**Shipped separately** [7]	PER5 Five-wire receptacle only (control ordered separately) [6,7]
				T4M Type IV Medium	277 [4]	BBW Surface-mounted back box (for conduit entry) [8]	PER7 Seven-wire receptacle only (control ordered separately) [6,7]
				TFTM Forward Throw Medium	347 [4,9]		DMG 0-10v dimming wires pulled outside fixture (for use with an external control, ordered separately)
				ASYDF Asymmetric diffuse	480 [4,9]		PIR 180° motion/ambient light sensor, <15' mtg ht [6,7]
							PIRH 180° motion/ambient light sensor, 15-30' mtg ht [6,7]
							PIR1FC3V Motion/ambient sensor, 8-15' mounting height, ambient sensor enabled at 1fc [6,7]
							PIRH1FC3V Motion/ambient sensor, 15-30' mounting height, ambient sensor enabled at 1fc [6,7]

Other Options		Finish (required)			
Shipped installed	**Shipped separately** [7]	DDBXD Dark bronze	DCSXD Sandstone	DWHGXD Textured white	
SF Single fuse (120, 277, 347V) [3]	BSW Bird-deterrent spikes	DBLXD Black	DDBTXD Textured dark bronze	DSSTXD Textured sandstone	
DF Double fuse (208, 240, 480V) [3]	VG Vandal guard	DNAXD Natural aluminum	DBLBXD Textured black		
HS House-side shield [4]		DWHXD White	DNATXD Textured natural aluminum		
SPD Separate surge protection [10]					

©2012-2019 Acuity Brands Lighting, Inc. All rights reserved.

TYPE OE - GARAGES

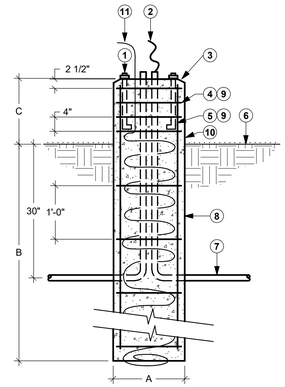

DIMENSIONS
A = 2'-0" DIA.
B = 7'-0"
C = 2'-6"

DETAIL NOTES:

1. AT CONTRACTOR'S OPTION, CONTRACTOR MAY USE A CURVED LID J-BOX RECESSED IN THE POLE BASE FOR ROUTING MULTIPLE CONDUITS TO/FROM A POLE. OTHERWISE STUBB CONDUITS OUT THE TOP OF THE CONCRETE BASE WITHIN THE POLE DIAMETER.
2. WHEN USED, JUNCTION BOXED SHALL FACE OPPOSITE TRAFFIC AND SNOW PLOWING.
3. PROVIDE A SPARE CONDUIT STUB AT EACH END-OF-LINE FIXTURE. SEE PLANS FOR ADDITIONAL SPARE STUBS.
4. PROVIDE A BUSHING ON ALL EXPOSED CONDUIT ENDS.

KEYED NOTES -

1. USE ANCHOR BOLTS FURNISHED BY POLE MANUFACTURER. VERIFY BOLT CIRCLE DIAMETER WITH
2. MANUFACTURER. APPLY "ANTI-SEIZE" LUBRICANT TO ALL ANCHOR BOLT THREADS. UTLIZIE LOCK WASHERS.
3. #10 GROUND PER CONDUIT - ATTACH TO GROUND LUG ON POLE.
4. 1" CHAMFER
5. #3 TIES AT 1'-0" O.C.
6. (8) #6 VERTICAL BARS
7. GRADE
8. NON-METALLIC CONDUIT 1" MINIMUM
9. PROVIDE AIR ENTRAINED CONCRETE WITH AT LEAST A 3000 PSI RATING AND 3/4" AGGREGATE.
10. ALL REINFORCING BARS TO BE ASTM A615 (60 KSI) AND EPOXY COATED.
11. PROVIDE A SMOOTH RUBBED FINISH ON EXPOSED CONCRETE ASSOCIATED WITH THE CONCRETE BASE. FINISH SHALL BE PER ACI 301-89, PARAGRAPH 10.31. PROVIDE TOP WITH BRUSHED FINISH.

   PROVIDE ERICO EK16 DIRECT BURY CLAMP (OR EQUAL) AT TOP OF REBAR CAGE. PROVIDE 23' OF #6 BARE COPPER STRANDED GROUNDING ELECTRODE CONDUCTOR. EXTEND CONDUCTOR OUT THE TOP OF POLE BASE TO GROUND LUG. SPIRAL 10' MINIMUM OF CONDUCTOR AROUND OUTSIDE OF REBAR CAGE. LOOP REMAINING CONDUCTOR AROUND REBAR CAGE AT BOTTOM OF POLE BASE IN CONTACT WITH EARTH.

1 POLE BASE DETAIL - RAISED 23-30FT POLE
NOT TO SCALE

CONTINENTAL PROPERTIES
CONTINENTAL 000123 FUND LLC
W134 N8675 EXECUTIVE PARKWAY
MENOMONEE FALLS, WI 53051
262.502.5500 * FAX 262.502.5522

RING & DUCHATEAU
17400 West Capitol Drive, Brookfield, WI 53045
301 South Blount Street, Suite 101 - Madison, WI 53703
Phone: 414.778.1700 / Fax: 414.778.2360 / r-d@rmgdu.com

THIS BAR IS 1" LONG.
IF IT MEASURES ANYTHING OTHER THAN 1" ADJUST SCALE ACCORDINGLY.
R&D Project No.: 221181.00

MICHAEL A. MORRIS E-36811 LICENSED PROFESSIONAL ENGINEER

09-02-2021

Revisions

2018 PROTOTYPE

Drawing Date
09/27/19

SPRINGS PROTOTYPE
Enter address here

Project No.
218006.04

Sheet Title
SITE LIGHTING FIXTURES

Sheet No.
E600S

9/2/2021 5:38:45 PM

Panel: RR

Remarks:

Voltage: 120/240 Single
Phases: 1
Wires: 3
Enclosure: Type 1
A.I.C. Rating: 10kA
Mounting: Surface
Feeder Rating: 100 A
Panel Rating: 60 A, MCB

BRKR		Notes	Circuit Description	CKT	A (VA)	B (VA)	CKT	Circuit Description	Notes	BRKR	
20 A	2		RING ROAD - SOUTH LIGHTING	1	700 / 770		2	RING ROAD - NORTH LIGHTING		2	20 A
				3		700 / 770	4				
20 A	2		SOUTH SIGN	5	600 / 600		6	NORTH SIGN		2	20 A
				7		600 / 600	8				
20 A	1		RECP - SERVICE	9	180 / 200		10	LIGHTING CONTROLS		1	20 A
--	--	--	SPACE	11		0 / 0	12	SPACE	--	--	--
					3050 VA	2670 VA					

	Lighting	HVAC	Motors	Receptacle	Refrig	Kitchen	Misc	PANEL TOTALS:	
Connected Load	3140 VA			180 VA			2400 VA		
Demand Factor	100.00%			**NEC**			100.00%	**Total Conn. Load:**	5720 VA
Demand Load	3140 VA			180 VA			2400 VA	**Total Est. Demand:**	5720 VA
								Total Conn. Current:	24 A
								Total Est. Demand Current:	24 A

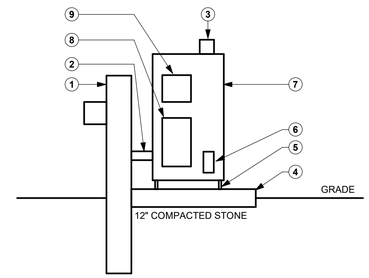

1 RING ROAD LIGHTING SERVICE DETAIL
NOT TO SCALE

KEYED NOTES -◄ (??)

1. 100 AMP METER PEDESTAL.
2. CONDUIT NIPPLE.
3. PHOTOCELL.
4. 24"X24"X6" THICK CONCRETE PAD WITH #4 EPOXY COAT REBAR 6" ON CENTER BOTH DIRECTION. 4000 PSI CONCRETE MIX 6% AIR ENTRAINMENT.
5. STAND OFF TO MOUNT ENCLOSURE 2" ABOVE CONCRETE.
6. DUPLEX GFI RECEPTACLE S-4.
7. HOFFMAN #A60R2518FSLP SERIES ENCLOSURE.
8. PANEL "RR".
9. 10 POLE LIGHTING CONTACTOR WITH 120 VOLT COIL.

Panel: AL

Remarks:

Voltage: 120/240 Single
Phases: 1
Wires: 3
Enclosure: Type 1
A.I.C. Rating: 10kA
Mounting: Surface
Feeder Rating: 100 A
Panel Rating: 60 A, MCB

BRKR		Notes	Circuit Description	CKT	A (VA)	B (VA)	CKT	Circuit Description	Notes	BRKR	
--	--	--	SPACE	1	0 / 280		2	PARKING LOT LIGHTING		2	20 A
--	--	--	SPACE	3		0 / 280	4				
20 A	1		RECP - SERVICE	5	180 / 200		6	LIGHTING CONTROLS		1	20 A
--	--	--	SPACE	7		0 / 0	8	SPACE	--	--	--
--	--	--	SPACE	9	0 / 0		10	SPACE	--	--	--
--	--	--	SPACE	11		0 / 0	12	SPACE	--	--	--
					660 VA	280 VA					

	Lighting	HVAC	Motors	Receptacle	Refrig	Kitchen	Misc	PANEL TOTALS:	
Connected Load	760 VA			180 VA					
Demand Factor	100.00%			**NEC**				**Total Conn. Load:**	940 VA
Demand Load	760 VA			180 VA				**Total Est. Demand:**	940 VA
								Total Conn. Current:	4 A
								Total Est. Demand Current:	4 A

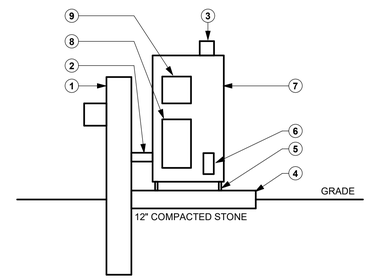

2 AUXILIARY LOT LIGHTING SERVICE DETAIL
NOT TO SCALE

KEYED NOTES -◄ (??)

1. 100 AMP METER PEDESTAL.
2. CONDUIT NIPPLE.
3. PHOTOCELL.
4. 24"X24"X6" THICK CONCRETE PAD WITH #4 EPOXY COAT REBAR 6" ON CENTER BOTH DIRECTION. 4000 PSI CONCRETE MIX 6% AIR ENTRAINMENT.
5. STAND OFF TO MOUNT ENCLOSURE 2" ABOVE CONCRETE.
6. DUPLEX GFI RECEPTACLE S-4.
7. HOFFMAN #A60R2518FSLP SERIES ENCLOSURE.
8. PANEL "AL".
9. 4 POLE LIGHTING CONTACTOR WITH 120 VOLT COIL.

Panel: NL

Remarks:

Voltage: 120/240 Single
Phases: 1
Wires: 3
Enclosure: Type 1
A.I.C. Rating: 10kA
Mounting: Surface
Feeder Rating: 100 A
Panel Rating: 60 A, MCB

BRKR		Notes	Circuit Description	CKT	A (VA)	B (VA)	CKT	Circuit Description	Notes	BRKR	
--	--	--	SPACE	1	0 / 1190		2	PARKING LOT LIGHTING		2	20 A
--	--	--	SPACE	3		0 / 1190	4				
20 A	1		RECP - SERVICE	5	180 / 200		6	LIGHTING CONTROLS		1	20 A
--	--	--	SPACE	7		0 / 0	8	SPACE	--	--	--
--	--	--	SPACE	9	0 / 0		10	SPACE	--	--	--
--	--	--	SPACE	11		0 / 0	12	SPACE	--	--	--
					1570 VA	1190 VA					

	Lighting	HVAC	Motors	Receptacle	Refrig	Kitchen	Misc	PANEL TOTALS:	
Connected Load	2580 VA			180 VA					
Demand Factor	100.00%			**NEC**				**Total Conn. Load:**	2760 VA
Demand Load	2580 VA			180 VA				**Total Est. Demand:**	2760 VA
								Total Conn. Current:	12 A
								Total Est. Demand Current:	12 A

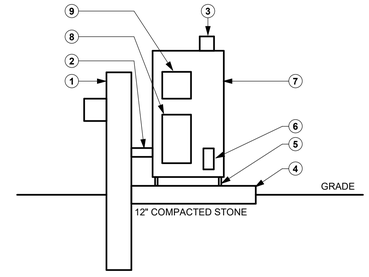

3 NORTH LOT LIGHTING SERVICE DETAIL
NOT TO SCALE

KEYED NOTES -◄ (??)

1. 100 AMP METER PEDESTAL.
2. CONDUIT NIPPLE.
3. PHOTOCELL.
4. 24"X24"X6" THICK CONCRETE PAD WITH #4 EPOXY COAT REBAR 6" ON CENTER BOTH DIRECTION. 4000 PSI CONCRETE MIX 6% AIR ENTRAINMENT.
5. STAND OFF TO MOUNT ENCLOSURE 2" ABOVE CONCRETE.
6. DUPLEX GFI RECEPTACLE S-4.
7. HOFFMAN #A60R2518FSLP SERIES ENCLOSURE.
8. PANEL "NL".
9. 4 POLE LIGHTING CONTACTOR WITH 120 VOLT COIL.

CONTINENTAL PROPERTIES
CONTINENTAL 000123 FUND LLC
W134 N8675 EXECUTIVE PARKWAY
MENOMONEE FALLS, WI 53051
262.502.5500 * FAX 262.502.5522

RING & DUCHATEAU
17400 West Capitol Drive, Brookfield, WI 53045
301 South Blount Street, Suite 101 - Madison, WI 53703
Phone: 414.778.1700 / Fax: 414.778.2360 / r-d@ringdu.com

THIS BAR IS 1" LONG.
IF IT MEASURES ANYTHING OTHER THAN 1"
ADJUST SCALE ACCORDINGLY.
R&D Project No.: 221181.00

Revisions

CONSTRUCTION DOCUMENTS

Drawing Date
03/28/2022

SPRINGS AT McKNIGHT LAKE
NORTH CHESNUT STREET & OAKRIDGE DRIVE,
CHASKA, MINNESOTA 55218

Project No.
221001.06

Sheet Title
SITE DETAILS AND PANEL SCHEDULES

Sheet No.
E601S

4/15/2022 1:48:06 AM

NOTE: LANDSCAPE PLAN SCHEDULE AND CODE TABLE ON SHEET L2.0

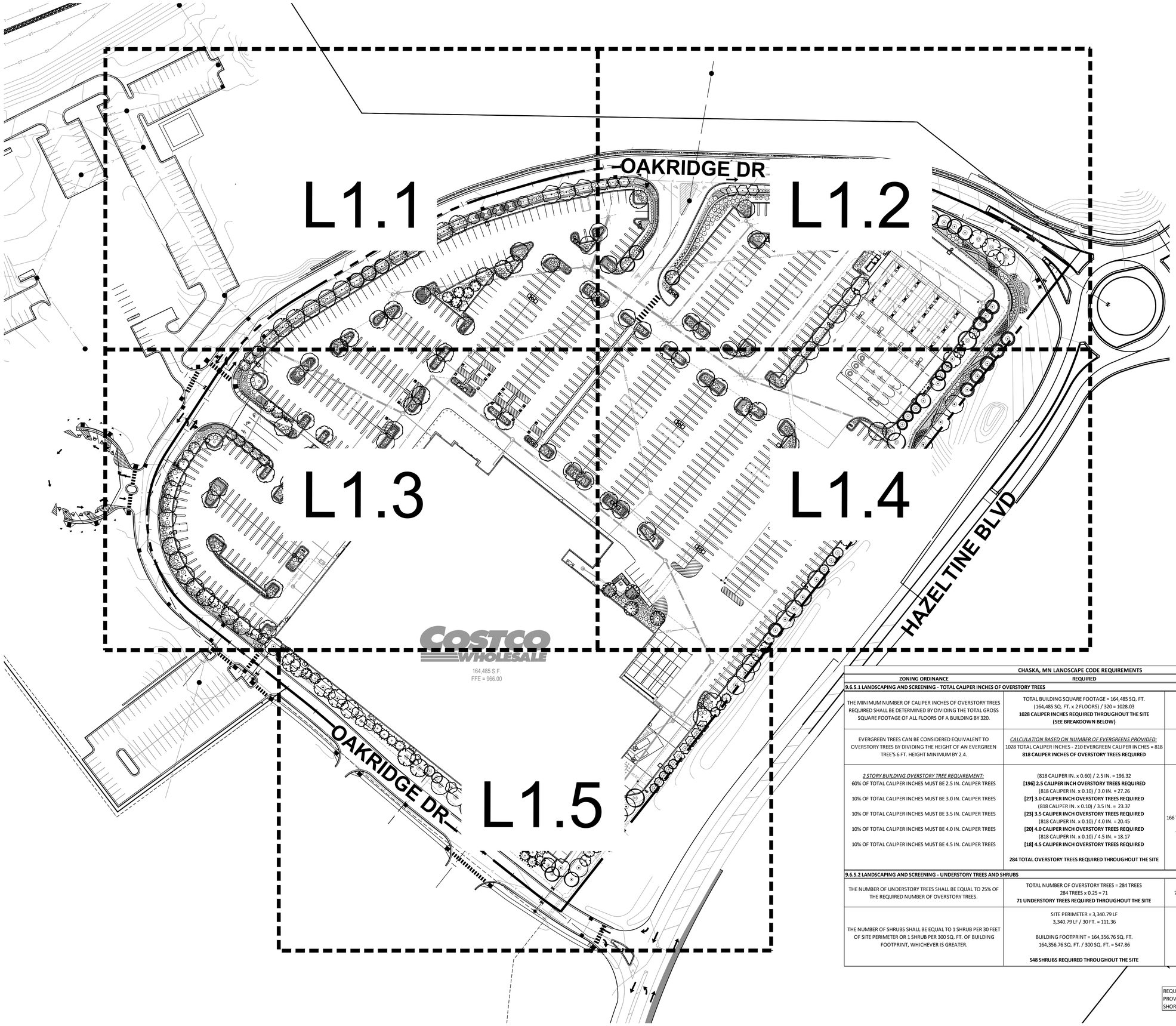

CHASKA, MN LANDSCAPE CODE REQUIREMENTS		
ZONING ORDINANCE	**REQUIRED**	**PROPOSED**
9.6.5.1 LANDSCAPING AND SCREENING - TOTAL CALIPER INCHES OF OVERSTORY TREES		
THE MINIMUM NUMBER OF CALIPER INCHES OF OVERSTORY TREES REQUIRED SHALL BE DETERMINED BY DIVIDING THE TOTAL GROSS SQUARE FOOTAGE OF ALL FLOORS OF A BUILDING BY 320.	TOTAL BUILDING SQUARE FOOTAGE = 164,485 SQ. FT. (164,485 SQ. FT. x 2 FLOORS) / 320 = 1028.03 **1028 CALIPER INCHES REQUIRED THROUGHOUT THE SITE** **(SEE BREAKDOWN BELOW)**	725 CALIPER INCHES PROVIDED THROUGHOUT THE SITE (SEE BREAKDOWN BELOW)
EVERGREEN TREES CAN BE CONSIDERED EQUIVALENT TO OVERSTORY TREES BY DIVIDING THE HEIGHT OF AN EVERGREEN TREE'S 6 FT. HEIGHT MINIMUM BY 2.4.	*CALCULATION BASED ON NUMBER OF EVERGREENS PROVIDED:* 1028 TOTAL CALIPER INCHES - 210 EVERGREEN CALIPER INCHES = 818 **818 CALIPER INCHES OF OVERSTORY TREES REQUIRED**	TOTAL NUMBER OF EVERGREENS PROVIDED = 49 (35 EVERGREEN TREES x 12 FT. HEIGHT) / 2.4 = 175 (14 EVERGREEN TREES x 6 FT. HEIGHT) / 2.4 = 35 **210 CALIPER INCHES OF EVERGREEN TREES PROVIDED**
2 STORY BUILDING OVERSTORY TREE REQUIREMENT: 60% OF TOTAL CALIPER INCHES MUST BE 2.5 IN. CALIPER TREES 10% OF TOTAL CALIPER INCHES MUST BE 3.0 IN. CALIPER TREES 10% OF TOTAL CALIPER INCHES MUST BE 3.5 IN. CALIPER TREES 10% OF TOTAL CALIPER INCHES MUST BE 4.0 IN. CALIPER TREES 10% OF TOTAL CALIPER INCHES MUST BE 4.5 IN. CALIPER TREES	(818 CALIPER IN. x 0.60) / 2.5 IN. = 196.32 **[196] 2.5 CALIPER INCH OVERSTORY TREES REQUIRED** (818 CALIPER IN. x 0.10) / 3.0 IN. = 27.26 **[27] 3.0 CALIPER INCH OVERSTORY TREES REQUIRED** (818 CALIPER IN. x 0.10) / 3.5 IN. = 23.37 **[23] 3.5 CALIPER INCH OVERSTORY TREES REQUIRED** (818 CALIPER IN. x 0.10) / 4.0 IN. = 20.45 **[20] 4.0 CALIPER INCH OVERSTORY TREES REQUIRED** (818 CALIPER IN. x 0.10) / 4.5 IN. = 18.17 **[18] 4.5 CALIPER INCH OVERSTORY TREES REQUIRED** **284 TOTAL OVERSTORY TREES REQUIRED THROUGHOUT THE SITE**	[80] 2.5 CALIPER INCH OVERSTORY TREES PROVIDED [26] 3.0 CALIPER INCH OVERSTORY TREES PROVIDED [23] 3.5 CALIPER INCH OVERSTORY TREES PROVIDED [20] 4.0 CALIPER INCH OVERSTORY TREES PROVIDED [17] 4.5 CALIPER INCH OVERSTORY TREES PROVIDED 166 TOTAL OVERSTORY TREES PROVIDED THROUGHOUT THE SITE TREES HAVE BEEN INSERTED WHEREVER SPACE ALLOWS. RETAINING WALLS ALSO RESTRICT TREE LOCATION. ALL PARKING LOT TREES WILL BE 2.5" CALIPER DUE TO RESTRICTED ROOTBALL AREA IN ISLANDS.
9.6.5.2 LANDSCAPING AND SCREENING - UNDERSTORY TREES AND SHRUBS		
THE NUMBER OF UNDERSTORY TREES SHALL BE EQUAL TO 25% OF THE REQUIRED NUMBER OF OVERSTORY TREES.	TOTAL NUMBER OF OVERSTORY TREES = 284 TREES 284 TREES x 0.25 = 71 **71 UNDERSTORY TREES REQUIRED THROUGHOUT THE SITE**	71 UNDERSTORY TREES PROVIDED THROUGHOUT THE SITE
THE NUMBER OF SHRUBS SHALL BE EQUAL TO 1 SHRUB PER 30 FEET OF SITE PERIMETER OR 1 SHRUB PER 300 SQ. FT. OF BUILDING FOOTPRINT, WHICHEVER IS GREATER.	SITE PERIMETER = 3,340.79 LF 3,340.79 LF / 30 FT. = 111.36 BUILDING FOOTPRINT = 164,356.76 SQ. FT. 164,356.76 SQ. FT. / 300 SQ. FT. = 547.86 **548 SHRUBS REQUIRED THROUGHOUT THE SITE**	1,654 SHRUBS PROVIDED THROUGHOUT THE SITE

REQUIRED CALIPER INCHES:	1028"
PROVIDED CALIPER INCHES:	725"
SHORTAGE:	303"

CONSULTANT
Kimley»Horn
© 2021 KIMLEY-HORN AND ASSOCIATES, INC.
4201 WINFIELD ROAD, SUITE 600
WARRENVILLE, IL 60555
PHONE: 630-487-5550
WWW.KIMLEY-HORN.COM

NORTH

GRAPHIC SCALE IN FEET
0 25 50 100

811 Know what's **below.** **Call** before you dig.

I HEREBY CERTIFY THAT THIS PLAN, SPECIFICATION, OR REPORT WAS PREPARED BY ME OR UNDER MY SUPERVISION AND THAT I AM A DULY LICENSED PROFESSIONAL LANDSCAPE ARCHITECT UNDER THE LAWS OF THE STATE OF MINNESOTA.

SIGNATURE:

RYAN A. HYLLESTED

DATE: 1/05/2022 LIC. NO. 53828

COSTCO WHOLESALE
NWC OF HAZELTINE BLVD & OAKRIDGE DR
CHASKA, MN

DATE	ISSUED FOR	REV

L1.0
OVERALL LANDSCAPE PLAN

AS INDICATED

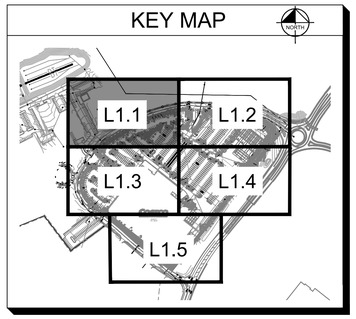

NOTE: SEE SHEET 2.0 FOR PLANT SCHEDULE.

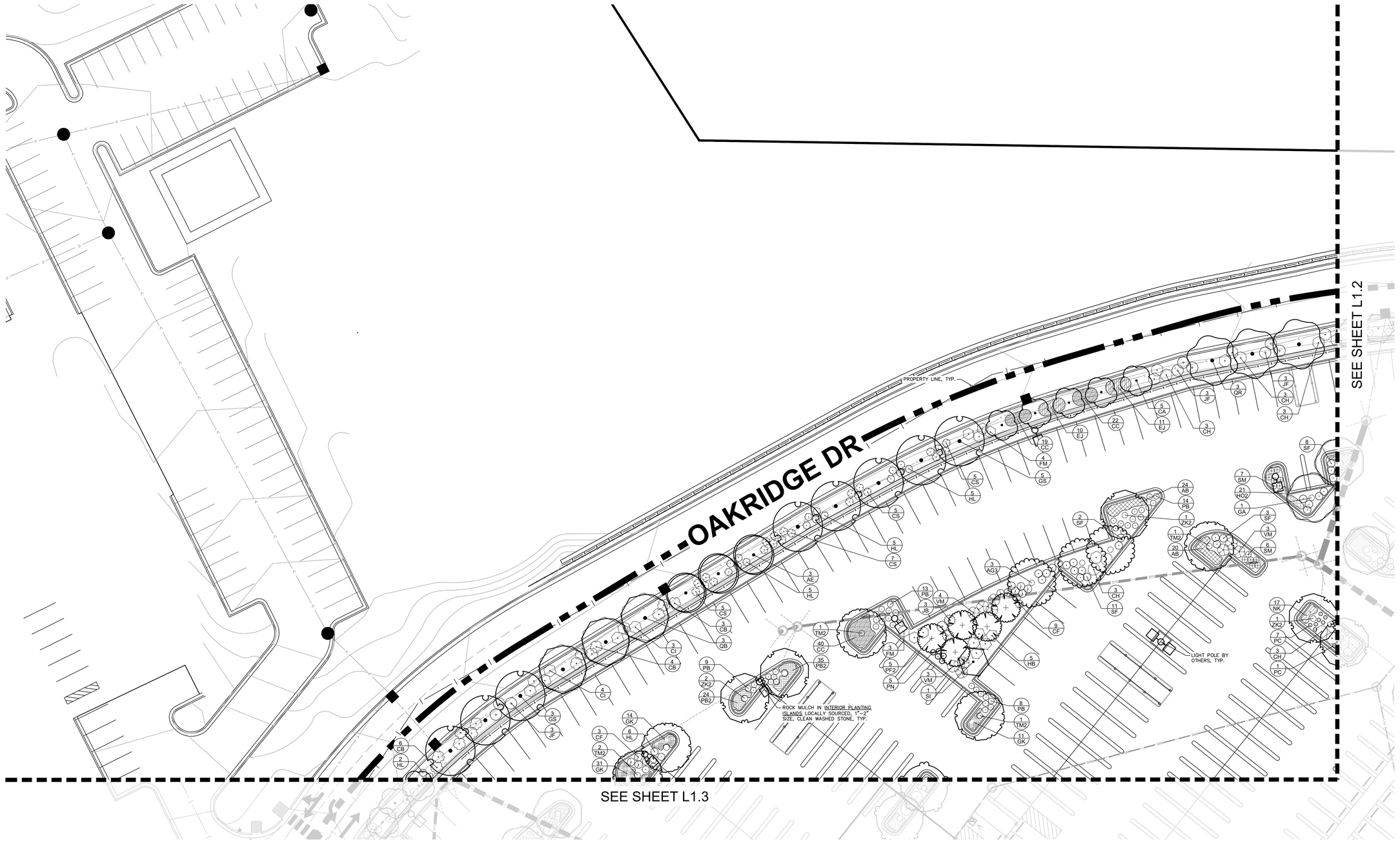

CONSULTANT

Kimley»Horn

© 2021 KIMLEY-HORN AND ASSOCIATES, INC.

4201 WINFIELD ROAD, SUITE 600
WARRENVILLE, IL 60555
PHONE: 630-487-5550
WWW.KIMLEY-HORN.COM

NORTH

GRAPHIC SCALE IN FEET
0 10 20 40

811 Know what's **below.** **Call** before you dig.

I HEREBY CERTIFY THAT THIS PLAN, SPECIFICATION, OR REPORT WAS PREPARED BY ME OR UNDER MY SUPERVISION AND THAT I AM A DULY LICENSED PROFESSIONAL LANDSCAPE ARCHITECT UNDER THE LAWS OF THE STATE OF MINNESOTA.

SIGNATURE:

RYAN A. HYLLESTED

DATE: 1/05/2022 LIC. NO. 53828

COSTCO WHOLESALE

NWC OF HAZELTINE BLVD & OAKRIDGE DR
CHASKA, MN

DATE	ISSUED FOR	REV

L1.1

DETAILED LANDSCAPE PLAN

AS INDICATED

11/5/2021 5:26:54 PM

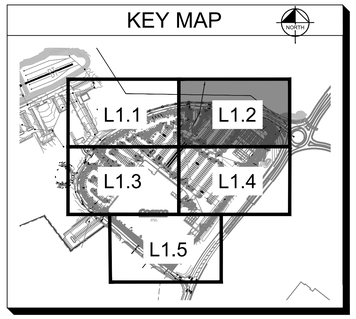

NOTE: SEE SHEET 2.0 FOR PLANT SCHEDULE.

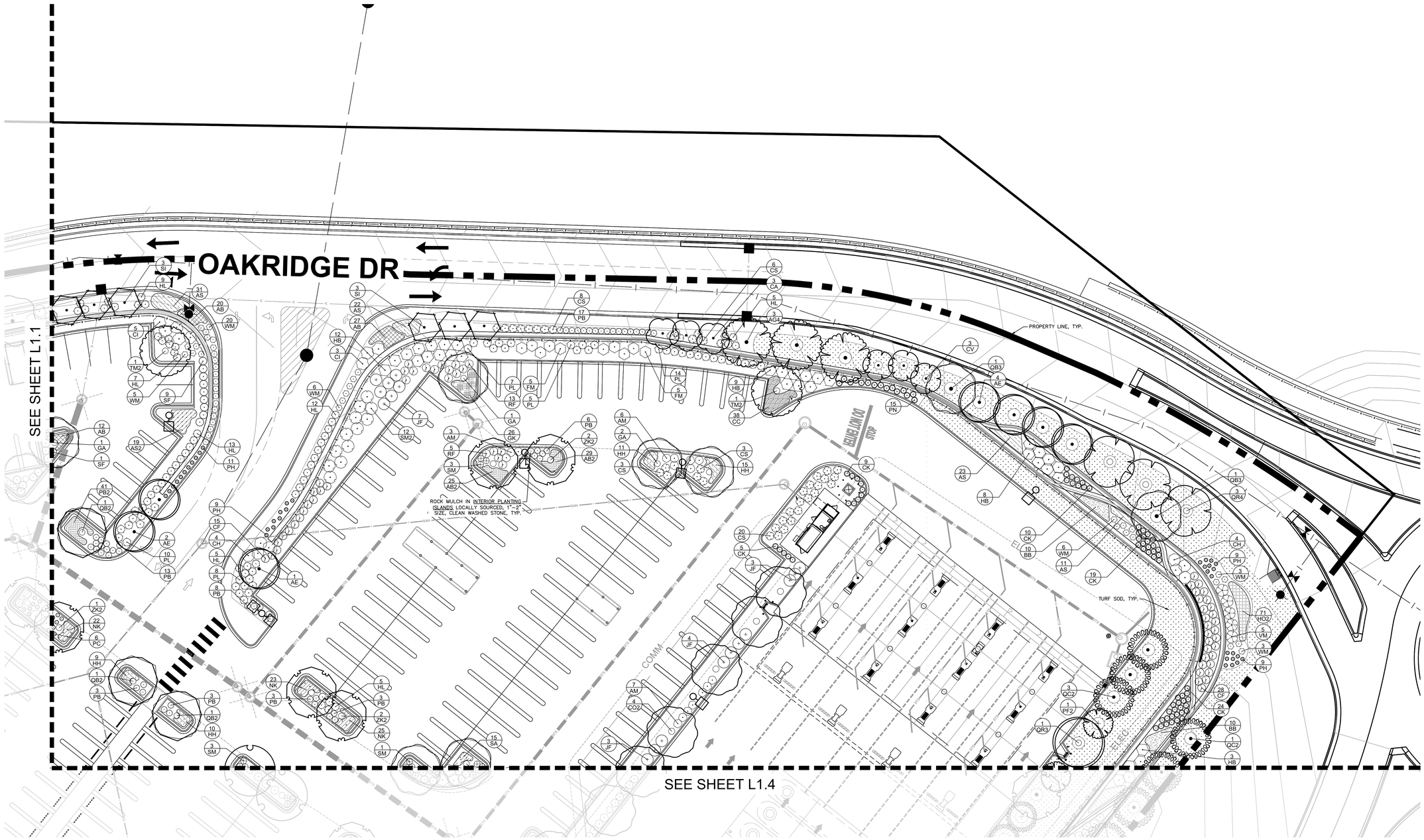

CONSULTANT

Kimley»Horn

© 2021 KIMLEY-HORN AND ASSOCIATES, INC.
4201 WINFIELD ROAD, SUITE 600
WARRENVILLE, IL 60555
PHONE: 630-487-5550
WWW.KIMLEY-HORN.COM

NORTH

GRAPHIC SCALE IN FEET
0 10 20 40

811 Know what's **below.** **Call** before you dig.

I HEREBY CERTIFY THAT THIS PLAN, SPECIFICATION, OR REPORT WAS PREPARED BY ME OR UNDER MY SUPERVISION AND THAT I AM A DULY LICENSED PROFESSIONAL LANDSCAPE ARCHITECT UNDER THE LAWS OF THE STATE OF MINNESOTA.

SIGNATURE:

RYAN A. HYLLESTED

DATE: 1/05/2022 LIC. NO. 53828

COSTCO WHOLESALE

NWC OF HAZELTINE BLVD & OAKRIDGE DR
CHASKA, MN

DATE	ISSUED FOR	REV

L1.2

DETAILED LANDSCAPE PLAN

AS INDICATED

11/5/2021 5:26:54 PM

KEY MAP

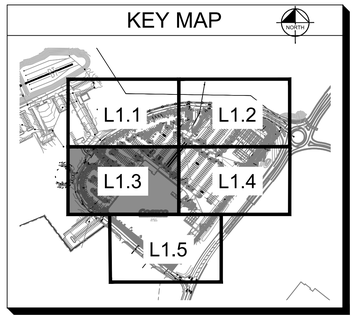

NOTE: SEE SHEET 2.0 FOR PLANT SCHEDULE.

SEE SHEET L1.1

PROPERTY LINE, TYP.

LIGHT POLE BY OTHERS, TYP.

ROCK MULCH IN INTERIOR PLANTING ISLANDS, LOCALLY SOURCED, 1"–2" SIZE, CLEAN WASHED STONE, TYP.

OAKRIDGE DR

SEE SHEET L1.4

SEE SHEET L1.5

CONSULTANT

Kimley»Horn

© 2021 KIMLEY-HORN AND ASSOCIATES, INC.
4201 WINFIELD ROAD, SUITE 600
WARRENVILLE, IL 60555
PHONE: 630-487-5550
WWW.KIMLEY-HORN.COM

NORTH

GRAPHIC SCALE IN FEET
0 10 20 40

811 Know what's **below.** **Call** before you dig.

I HEREBY CERTIFY THAT THIS PLAN, SPECIFICATION, OR REPORT WAS PREPARED BY ME OR UNDER MY SUPERVISION AND THAT I AM A DULY LICENSED PROFESSIONAL LANDSCAPE ARCHITECT UNDER THE LAWS OF THE STATE OF MINNESOTA.

SIGNATURE:

RYAN A. HYLLESTED

DATE: 1/05/2022 LIC. NO. 53828

COSTCO WHOLESALE

NWC OF HAZELTINE BLVD & OAKRIDGE DR
CHASKA, MN

DATE	ISSUED FOR	REV

L1.3

DETAILED LANDSCAPE PLAN

AS INDICATED

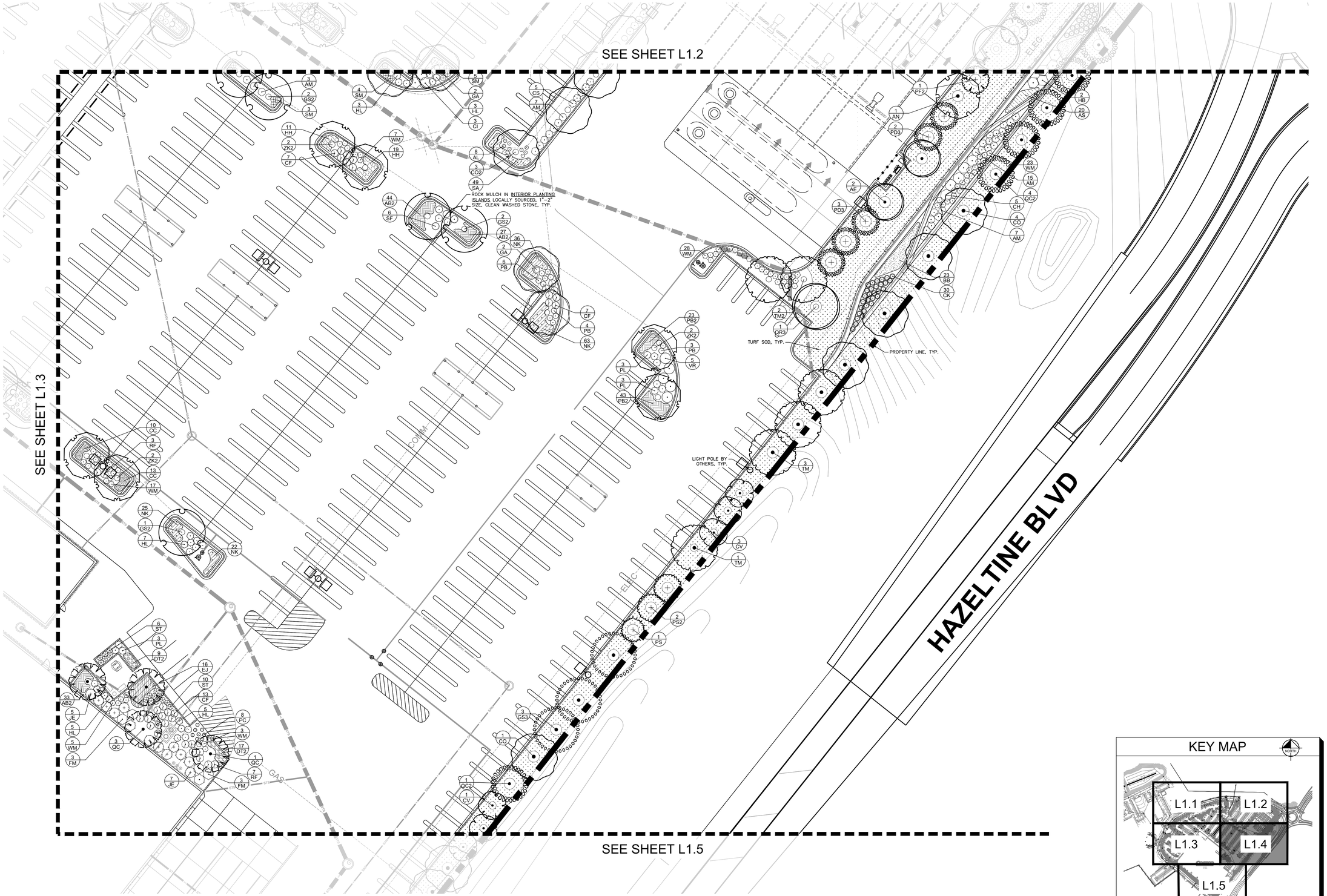

KEY MAP

NOTE: SEE SHEET 2.0 FOR PLANT SCHEDULE.

CONSULTANT

Kimley»Horn

© 2021 KIMLEY-HORN AND ASSOCIATES, INC.
4201 WINFIELD ROAD, SUITE 600
WARRENVILLE, IL 60555
PHONE: 630-487-5550
WWW.KIMLEY-HORN.COM

NORTH

GRAPHIC SCALE IN FEET
0 10 20 40

811 Know what's **below.** **Call** before you dig.

I HEREBY CERTIFY THAT THIS PLAN, SPECIFICATION, OR REPORT WAS PREPARED BY ME OR UNDER MY SUPERVISION AND THAT I AM A DULY LICENSED PROFESSIONAL LANDSCAPE ARCHITECT UNDER THE LAWS OF THE STATE OF MINNESOTA.

SIGNATURE:

RYAN A. HYLLESTED

DATE: 1/05/2022 LIC. NO. 53828

COSTCO WHOLESALE

NWC OF HAZELTINE BLVD & OAKRIDGE DR
CHASKA, MN

DATE	ISSUED FOR	REV

L1.4

DETAILED LANDSCAPE PLAN

AS INDICATED

SEE SHEET L1.3

SEE SHEET L1.4

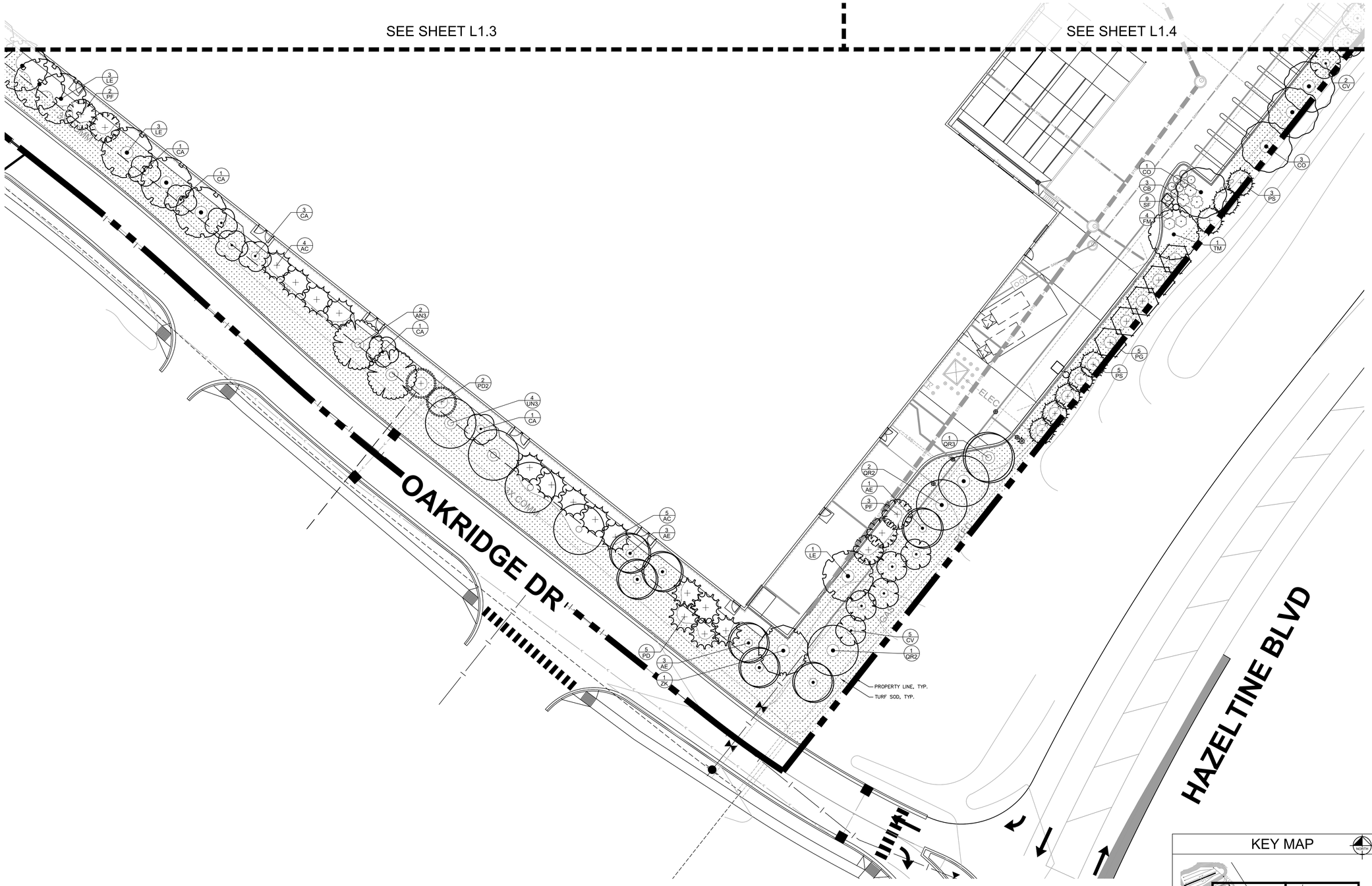

KEY MAP

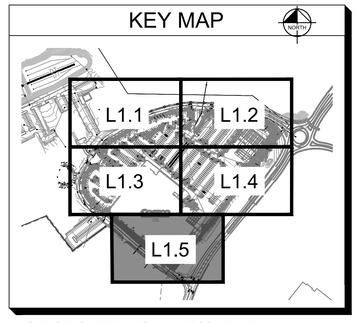

NOTE: SEE SHEET 2.0 FOR PLANT SCHEDULE.

CONSULTANT

Kimley»Horn

© 2021 KIMLEY-HORN AND ASSOCIATES, INC.

4201 WINFIELD ROAD, SUITE 600
WARRENVILLE, IL 60555
PHONE: 630-487-5550
WWW.KIMLEY-HORN.COM

NORTH

GRAPHIC SCALE IN FEET
0 10 20 40

811 Know what's **below.** **Call** before you dig.

I HEREBY CERTIFY THAT THIS PLAN, SPECIFICATION, OR REPORT WAS PREPARED BY ME OR UNDER MY SUPERVISION AND THAT I AM A DULY LICENSED PROFESSIONAL LANDSCAPE ARCHITECT UNDER THE LAWS OF THE STATE OF MINNESOTA.

SIGNATURE:

RYAN A. HYLLESTED

DATE: 1/05/2022 LIC. NO. 53828

COSTCO WHOLESALE

NWC OF HAZELTINE BLVD & OAKRIDGE DR
CHASKA, MN

DATE	ISSUED FOR	REV

L1.5

DETAILED LANDSCAPE PLAN

AS INDICATED

PLANT SCHEDULE

2.5 CALIPER INCH OVERSTORY TREES	CODE	QTY	BOTANICAL / COMMON NAME	CONT	CAL / INSTALL SIZE	MATURE HT.	MATURE SP.	OTHER
	AG3	3	ACER SACCHARUM 'GREEN MOUNTAIN' / GREEN MOUNTAIN SUGAR MAPLE	B & B	2.5" CAL. MIN	40` - 60` HT.	25` - 45` SP.	
	AN2	5	ACER X FREEMANII 'AUTUMN BLAZE' / AUTUMN BLAZE MAPLE	B & B	2.5" CAL. MIN	40` - 55` HT.	30` - 40` SP.	
	CO2	7	CELTIS OCCIDENTALIS / COMMON HACKBERRY	B & B	2.5" CAL. MIN	40` - 60` HT.	40` - 60` SP.	
	GA	13	GINKGO BILOBA 'AUTUMN GOLD' TM / AUTUMN GOLD MAIDENHAIR TREE	B & B	2.5" CAL. MIN	40` - 50` HT.	25` - 30` SP.	
	GS2	7	GLEDITSIA TRIACANTHOS INERMIS 'SHADEMASTER' / SHADEMASTER HONEY LOCUST	B & B	2.5" CAL. MIN	60` - 80` HT.	60` - 80` SP.	
	QB2	8	QUERCUS BICOLOR / SWAMP WHITE OAK	B & B	2.5" CAL. MIN	50` - 60` HT.	50` - 60` SP.	
	TM2	11	TILIA AMERICANA `MCKSENTRY` / SENTRY LINDEN	B & B	2.5" CAL. MIN	40` - 45` HT.	25` - 30` SP.	
	UN2	5	ULMUS AMERICANA 'NEW HARMONY' / NEW HARMONY AMERICAN ELM	B & B	2.5" CAL. MIN	70` HT.	65` SP.	
	ZK2	21	ZELKOVA SERRATA `AUTUMN GLOW` / AUTUMN GLOW JAPANESE ZELKOVA	B & B	2.5" CAL. MIN	35` HT.	25` - 30` SP.	

3.0 CALIPER INCH OVERSTORY TREES	CODE	QTY	BOTANICAL / COMMON NAME	CONT	CAL / INSTALL SIZE	MATURE HT.	MATURE SP.	OTHER
	AG	3	ACER SACCHARUM 'GREEN MOUNTAIN' / GREEN MOUNTAIN SUGAR MAPLE	B & B	3" CAL. MIN	40` - 60` HT.	25` - 45` SP.	
	GS	8	GLEDITSIA TRIACANTHOS INERMIS 'SHADEMASTER' / SHADEMASTER HONEY LOCUST	B & B	3" CAL. MIN	60` - 80` HT.	60` - 80` SP.	
	QB	3	QUERCUS BICOLOR / SWAMP WHITE OAK	B & B	3" CAL. MIN	50` - 60` HT.	50` - 60` SP.	
	QC	4	QUERCUS ROBUR X ALBA 'CRIMSCHMIDT' TM / CRIMSON SPIRE OAK	B & B	3" CAL. MIN	45` HT.	15` SP.	
	QR	3	QUERCUS RUBRA / RED OAK	B & B	3" CAL. MIN	50` - 75` HT.	50` - 75` SP.	
	UN	5	ULMUS AMERICANA 'NEW HARMONY' / NEW HARMONY AMERICAN ELM	B & B	3" CAL. MIN	70` HT.	65` SP.	

3.5 CALIPER INCH OVERSTORY TREES	CODE	QTY	BOTANICAL / COMMON NAME	CONT	CAL / INSTALL SIZE	MATURE HT.	MATURE SP.	OTHER
	AG4	6	ACER SACCHARUM 'GREEN MOUNTAIN' / GREEN MOUNTAIN SUGAR MAPLE	B & B	3.5" CAL. MIN	40` - 60` HT.	25` - 45` SP.	
	AN	3	ACER X FREEMANII 'AUTUMN BLAZE' / AUTUMN BLAZE MAPLE	B & B	3.5" CAL. MIN	40` - 55` HT.	30` - 40` SP.	
	QB3	2	QUERCUS BICOLOR / SWAMP WHITE OAK	B & B	3.5" CAL. MIN	50` - 60` HT.	50` - 60` SP.	
	QC2	9	QUERCUS ROBUR X ALBA 'CRIMSCHMIDT' TM / CRIMSON SPIRE OAK	B & B	3.5" CAL. MIN	45` HT.	15` SP.	
	QR4	3	QUERCUS RUBRA / RED OAK	B & B	3.5" CAL. MIN	50` - 75` HT.	50` - 75` SP.	

4.0 CALIPER INCH OVERSTORY TREES	CODE	QTY	BOTANICAL / COMMON NAME	CONT	CAL / INSTALL SIZE	MATURE HT.	MATURE SP.	OTHER
	CO	9	CELTIS OCCIDENTALIS / COMMON HACKBERRY	B & B	4" CAL. MIN	40` - 60` HT.	40` - 60` SP.	
	GS3	3	GLEDITSIA TRIACANTHOS INERMIS 'SHADEMASTER' / SHADEMASTER HONEY LOCUST	B & B	4" CAL. MIN	60` - 80` HT.	60` - 80` SP.	
	QR3	3	QUERCUS RUBRA / RED OAK	B & B	4" CAL. MIN	50` - 75` HT.	50` - 75` SP.	
	TM	5	TILIA AMERICANA `MCKSENTRY` / SENTRY LINDEN	B & B	4" CAL. MIN	40` - 45` HT.	25` - 30` SP.	

4.5 CALIPER INCH OVERSTORY TREES	CODE	QTY	BOTANICAL / COMMON NAME	CONT	CAL / INSTALL SIZE	MATURE HT.	MATURE SP.	OTHER
	AN3	2	ACER X FREEMANII 'AUTUMN BLAZE' / AUTUMN BLAZE MAPLE	B & B	4.5" CAL. MIN	40` - 55` HT.	30` - 40` SP.	
	LE	7	LIRIODENDRON TULIPIFERA `EMERALD CITY` TM / EMERALD CITY TULIP TREE	B & B	4.5" CAL. MIN	55` HT.	25` SP.	
	QR2	3	QUERCUS RUBRA / RED OAK	B & B	4.5" CAL. MIN	50` - 75` HT.	50` - 75` SP.	
	UN3	4	ULMUS AMERICANA 'NEW HARMONY' / NEW HARMONY AMERICAN ELM	B & B	4.5" CAL. MIN	70` HT.	65` SP.	
	ZK	1	ZELKOVA SERRATA `AUTUMN GLOW` / AUTUMN GLOW JAPANESE ZELKOVA	B & B	4.5" CAL. MIN	35` HT.	25` - 30` SP.	

EVERGREEN TREES	CODE	QTY	BOTANICAL / COMMON NAME	CONT	CAL / INSTALL SIZE	MATURE HT.	MATURE SP.	OTHER
	AC	9	ABIES CONCOLOR / WHITE FIR	B & B	12` HT. MIN.	40` - 50` HT.	15` - 25` SP.	
	PD	5	PICEA GLAUCA 'DENSATA' / BLACK HILLS WHITE SPRUCE	B & B	12` HT. MIN.	25` - 35` HT.	10` - 15` SP.	
	PD2	2	PSEUDOTSUGA MENZIESII / DOUGLAS FIR	B & B	12` HT. MIN.	40` - 60` HT.	15` - 20` SP.	
	PD3	5	PSEUDOTSUGA MENZIESII / DOUGLAS FIR	B & B	6` HT. MIN	40` - 60` HT.	15` - 20` SP.	
	PF	5	PINUS FLEXILIS 'VANDERWOLF'S PYRAMID' / VANDERWOLF'S PYRAMID LIMBER PINE	B & B	12` HT. MIN.	35` HT.	20` SP.	
	PF2	7	PINUS FLEXILIS 'VANDERWOLF'S PYRAMID' / VANDERWOLF'S PYRAMID LIMBER PINE	B & B	6` HT. MIN	35` HT.	20` SP.	
	PG	5	PICEA PUNGENS 'GLAUCA' / BLUE COLORADO SPRUCE	B & B	12` HT. MIN.	55` HT.	20` - 30` SP.	
	PS	9	PINUS STROBUS / WHITE PINE	B & B	12` HT. MIN.	70` HT.	40` SP.	
	PS2	2	PINUS STROBUS / WHITE PINE	B & B	6` HT. MIN	70` HT.	40` SP.	

ORNAMENTAL/UNDERSTORY	CODE	QTY	BOTANICAL / COMMON NAME	CONT	CAL / INSTALL SIZE	MATURE HT.	MATURE SP.	OTHER
	AE	19	AESCULUS X ARNOLDIANA 'AUTUMN SPLENDOR' / AUTUMN SPLENDOR HORSECHESTNUT	B & B	2" CAL. MIN	35` HT.	25` SP.	SINGLE STEM
	CA	23	CARPINUS CAROLINIANA / AMERICAN HORNBEAM	B & B	6` - 8` HT. MIN	25` - 35` HT.	20` SP.	SINGLE STEM
	CV	22	CRATAEGUS CRUS-GALLI INERMIS TM / THORNLESS COCKSPUR HAWTHORN	B & B	6` - 8` HT. MIN	20` - 30` HT.	20` - 30` SP.	SINGLE STEM
	SI	7	SYRINGA RETICULATA 'IVORY SILK' / IVORY SILK JAPANESE TREE LILAC	B & B	6` - 8` HT. MIN	20` - 25` HT.	15` - 20` SP.	SINGLE STEM

SHRUBS	CODE	QTY	BOTANICAL / COMMON NAME	CONT	SPACING	INSTALL SIZE	MATURE HT.	MATURE SP.
	AL	34	ARONIA MELANOCARPA 'UCONNAM165' TM / LOW SCAPE MOUND BLACK CHOKEBERRY	3 GAL	SEE PLAN	15" HT MIN	18" - 24" HT.	18" - 24" SP.
	AM	48	ARONIA MELANOCARPA 'MORTON' TM / IROQUOIS BEAUTY BLACK CHOKEBERRY	5 GAL	SEE PLAN	18" HT MIN	24" - 36" HT.	36" - 48" SP.
	CB	33	CEPHALANTHUS OCCIDENTALIS 'BAILOPTICS' TM / FIBER OPTICS BUTTONBUSH	5 GAL	SEE PLAN	36" HT MIN	6` HT.	5` - 6` SP.
	CF	115	CORNUS SERICEA 'FARROW' TM / ARCTIC FIRE RED TWIG DOGWOOD	3 GAL	SEE PLAN	18" HT. MIN.	36" - 48" HT.	36" - 48" SP.
	CH	36	CORNUS ALBA `BAILHALO` TM / IVORY HALO DOGWOOD	5 GAL	6` OC	36" HT MIN	4` - 6` HT.	4` - 6` SP.
	CI	45	CORNUS SERICEA 'ISANTI' / ISANTI RED TWIG DOGWOOD	5 GAL	6` OC	36" HT MIN	4` - 6` HT.	4` - 6` SP.
	CS	67	CORNUS SERICEA 'SUMMER GOLD' / SUMMER GOLD KOREAN DOGWOOD	7 GAL	48" OC	24" HT MIN	6` - 8` HT.	3` - 4` SP
	FM	36	FORSYTHIA X INTERMEDIA 'MINDOR' TM / SHOW OFF FORSYTHIA	3 GAL	6` OC	36" HT MIN	4` - 6` HT.	4` - 6` SP.
	HB	39	HYDRANGEA PANICULATA `BULK` TM / QUICK FIRE PANICLE HYDRANGEA	5 GAL	SEE PLAN	24" HT MIN	6` - 8` HT.	4` - 6` SP.
	HL	145	HYDRANGEA PANICULATA `JANE` TM / LITTLE LIME PANICLE HYDRANGEA	3 GAL	4` OC	12" HT. MIN.	36" - 48" HT.	36" - 48" SP.
	JB	6	JUNIPERUS SABINA 'BROADMOOR' / BROADMOOR JUNIPER	3 GAL	6` OC	12" HT MIN	24" - 36" HT.	6` - 10` SP.
	JE	12	JUNIPERUS CHINENSIS `FAIRVIEW` / FAIRVIEW JUNIPER	B & B	SEE PLAN	6` HT. MIN.	15` - 20` HT	4` - 6` SP.
	JF	43	JUNIPERUS CHINENSIS 'SEA GREEN' / SEA GREEN JUNIPER	5 GAL	6` OC	24" HT MIN	4` - 6` HT.	6` - 8` SP.
	PB	138	POTENTILLA FRUTICOSA 'HACHLISS' TM / BELLA BELLISSIMA BUSH CINQUEFOIL	3 GAL	36" OC	12" HT MIN	24" - 36" HT.	24" - 36" SP.
	PL	108	PHYSOCARPUS OPULIFOLIUS 'LITTLE DEVIL' TM / LITTLE DEVIL DWARF NINEBARK	5 GAL	SEE PLAN	18" HT MIN	36" - 48" HT.	36" - 48" SP.
	RF	74	ROSA RUGOSA `FRU DAGMAR HASTRUP` / FRU DAGMAR HASTRUP ROSE	5 GAL	SEE PLAN	24" HT MIN	36" - 48" HT.	3` - 4` SP
	SF	59	SPIRAEA JAPONICA 'NEON FLASH' / NEON FLASH JAPANESE SPIREA	3 GAL	SEE PLAN	12" HT MIN	24" - 36" HT.	3` - 4` SP
	SM	77	SPIRAEA JAPONICA 'WALBUMA' / MAGIC CARPET JAPANESE SPIREA	3 GAL	SEE PLAN	6" HT. MIN.	12" - 18" HT.	24" - 36" SP.
	SM2	15	SYRINGA MEYERI `PALIBIN` / DWARF KOREAN LILAC	5 GAL	SEE PLAN	36" HT MIN	4` - 6` HT.	6` - 8` SP.
	ST	48	SPIRAEA BETULIFOLIA 'TOR GOLD' TM / GLOW GIRL BIRCHLEAF SPIREA	3 GAL	SEE PLAN	12" HT MIN	24" - 36" HT.	24" - 36" SP.
	VM	19	VIBURNUM DENTATUM 'BLUE MUFFIN' / BLUE MUFFIN ARROWWOOD VIBURNUM	5 GAL	SEE PLAN	24" HT MIN	4` - 6` HT.	4` - 6` SP.
	VR	11	DIERVILLA RIVULARIS `SMNDRSF` TM / KODIAK BLACK HONEYSUCKLE	3 GAL	6` OC	24" HT MIN	36" - 48" HT.	4` - 6` SP.
	WM	178	WEIGELA FLORIDA 'MINUET' / MINUET WEIGELA	3 GAL	SEE PLAN	15" HT MIN	18" - 24" HT.	24" - 36" SP.

GRASSES	CODE	QTY	BOTANICAL / COMMON NAME	CONT	SPACING	INSTALL SIZE	MATURE HT.	MATURE SP.
	CK	130	CALAMAGROSTIS X ACUTIFLORA 'KARL FOERSTER' / KARL FOERSTER FEATHER REED GRASS	1 GAL	SEE PLAN	18" HT MIN	4` - 6` HT.	24" - 36" SP.
	PC	41	PANICUM VIRGATUM 'CAPE BREEZE' / CAPE BREEZE SWITCH GRASS	1 GAL	SEE PLAN	12" HT MIN	24" - 36" HT.	18" - 24" SP.
	PH	47	PANICUM VIRGATUM 'HEAVY METAL' / HEAVY METAL SWITCH GRASS	1 GAL	SEE PLAN	18" HT MIN	4` - 6` HT.	18" - 24" SP.
	PN	50	PANICUM VIRGATUM 'NORTHWIND' / NORTHWIND SWITCH GRASS	1 GAL	SEE PLAN	18" HT MIN	6` - 8` HT.	24" - 36" SP.

GRASSES AND PERENNIALS	CODE	QTY	BOTANICAL / COMMON NAME	CONT	SPACING	MATURE HT.
	AB	171	AMSONIA X 'BLUE ICE' / BLUE ICE BLUESTAR	1 GAL	24" OC	12" - 18" HT.
	AB2	260	ACHILLEA MILLEFOLIUM 'BALVINWITE' TM / NEW VINTAGE WHITE COMMON YARROW	1 GAL	18" OC	8" - 12" HT.
	AS	207	ALLIUM X 'SUMMER BEAUTY' / SUMMER BEAUTY ORNAMENTAL ONION	1 GAL	24" OC	12" - 18" HT.
	AS2	19	ACHILLEA MILLEFOLIUM 'STRAWBERRY SEDUCTION' / STRAWBERRY SEDUCTION COMMON YARROW	1 GAL	30" OC	18" - 24" HT.
	BB	43	BAPTISIA X `BLUEBERRY SUNDAE` TM / BLUEBERRY SUNDAE DECADENCE WILD INDIGO	1 GAL	36" OC	24" - 36" HT.
	CC	213	COREOPSIS X 'MOONBEAM' / MOONBEAM TICKSEED	1 GAL	24" OC	12" - 18" HT.
	DT2	26	DESCHAMPSIA CESPITOSA / TUFTED HAIR GRASS	1 GAL	24" OC	3` - 4` HT.
	EJ	51	EUPATORIUM DUBIUM 'LITTLE JOE' / LITTLE JOE DWARF JOE PYE WEED	1 GAL	36" OC	3` - 4` HT.
	EP	17	ECHINACEA 'RUBY STAR' / RUBY STAR CONEFLOWER	1 GAL	18" OC	3` - 4` HT.
	GK	172	GERANIUM X CANTABRIGIENSE 'KARMINA' / BIOKOVO CRANESBILL	1 GAL	24" OC	8" - 12" HT.
	HH	107	HEMEROCALLIS X 'HAPPY RETURNS' / HAPPY RETURNS DAYLILY	1 GAL	24" OC	12" - 18" HT.
	HO2	148	HEUCHERA X 'OBSIDIAN' / OBSIDIAN CORAL BELLS	1 GAL	18" OC	8" - 12" HT.
	NK	295	NEPETA X FAASSENII 'KIT KAT' / KIT KAT CATMINT	1 GAL	18" OC	8" - 12" HT.
	PB2	237	PENNISETUM ALOPECUROIDES 'BURGUNDY BUNNY' / BURGUNDY BUNNY DWARF FOUNTAIN GRASS	1 GAL	18" OC	12" - 18" HT.
	SA	154	SEDUM SPECTABILE 'NEON' / NEON STONECROP	1 GAL	18" OC	12" - 18" HT.

GROUND COVERS	BOTANICAL / COMMON NAME
	TURF SOD

CONSULTANT

Kimley»Horn

© 2021 KIMLEY-HORN AND ASSOCIATES, INC.
4201 WINFIELD ROAD, SUITE 600
WARRENVILLE, IL 60555
PHONE: 630-487-5550
WWW.KIMLEY-HORN.COM

811 Know what's **below.** **Call** before you dig.

I HEREBY CERTIFY THAT THIS PLAN, SPECIFICATION, OR REPORT WAS PREPARED BY ME OR UNDER MY SUPERVISION AND THAT I AM A DULY LICENSED PROFESSIONAL LANDSCAPE ARCHITECT UNDER THE LAWS OF THE STATE OF MINNESOTA.

SIGNATURE:

RYAN A. HYLLESTED

DATE: 1/05/2022 LIC. NO. 53828

DATE	ISSUED FOR	REV

COSTCO WHOLESALE
NWC OF HAZELTINE BLVD & OAKRIDGE DR
CHASKA, MN

L2.0

LANDSCAPE NOTES AND DETAILS

AS INDICATED

NOTE: ALL INTERIOR ISLANDS AND FOUNDATION LANDSCAPE TO BE MULCHED WITH DECORATIVE STONE.

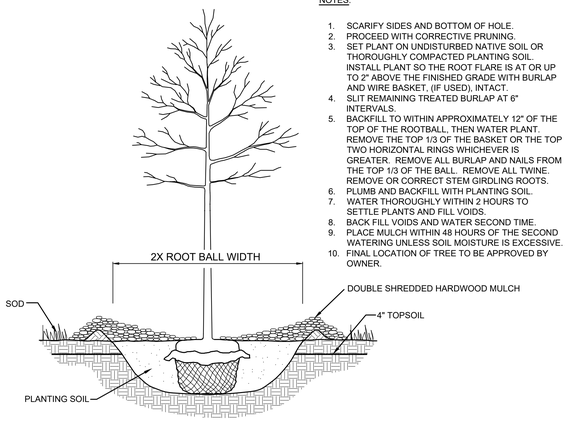

NOTES:

1. SCARIFY SIDES AND BOTTOM OF HOLE.
2. PROCEED WITH CORRECTIVE PRUNING.
3. SET PLANT ON UNDISTURBED NATIVE SOIL OR THOROUGHLY COMPACTED PLANTING SOIL. INSTALL PLANT SO THE ROOT FLARE IS AT OR UP TO 2" ABOVE THE FINISHED GRADE WITH BURLAP AND WIRE BASKET, (IF USED), INTACT.
4. SLIT REMAINING TREATED BURLAP AT 6" INTERVALS.
5. BACKFILL TO WITHIN APPROXIMATELY 12" OF THE TOP OF THE ROOTBALL, THEN WATER PLANT. REMOVE THE TOP 1/3 OF THE BASKET OR THE TOP TWO HORIZONTAL RINGS WHICHEVER IS GREATER. REMOVE ALL BURLAP AND NAILS FROM THE TOP 1/3 OF THE BALL. REMOVE ALL TWINE. REMOVE OR CORRECT STEM GIRDLING ROOTS.
6. PLUMB AND BACKFILL WITH PLANTING SOIL.
7. WATER THOROUGHLY WITHIN 2 HOURS TO SETTLE PLANTS AND FILL VOIDS.
8. BACK FILL VOIDS AND WATER SECOND TIME.
9. PLACE MULCH WITHIN 48 HOURS OF THE SECOND WATERING UNLESS SOIL MOISTURE IS EXCESSIVE.
10. FINAL LOCATION OF TREE TO BE APPROVED BY OWNER.

1 TREE PLANTING

NTS

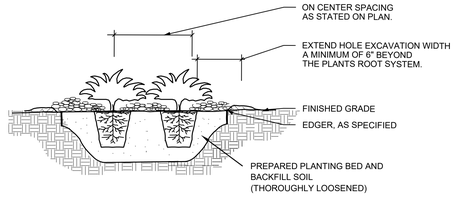

NOTES:

1. SCARIFY SIDES AND BOTTOM OF HOLE.
2. PROCEED WITH CORRECTIVE PRUNING OF TOP AND ROOT.
3. REMOVE CONTAINER AND SCORE OUTSIDE OF SOIL MASS TO REDIRECT AND PREVENT CIRCLING FIBROUS ROOTS. REMOVE OR CORRECT STEM GIRDLING ROOTS.
4. PLUMB AND BACKFILL WITH PLANTING SOIL.
5. WATER THOROUGHLY WITHIN 2 HOURS TO SETTLE PLANTS AND FILL VOIDS.
6. BACK FILL VOIDS AND WATER SECOND TIME.
7. PLACE MULCH WITHIN 48 HOURS OF THE SECOND WATERING UNLESS SOIL MOISTURE IS EXCESSIVE.
8. MIX IN 3-4" OF ORGANIC COMPOST.

2 SHRUB/PERENNIAL PLANTING

NTS

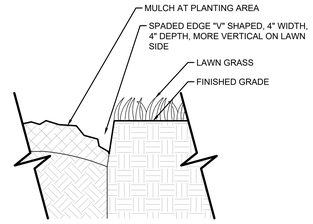

3 SPADED EDGE DETAIL

NTS

LANDSCAPE NOTES

1. CONTRACTOR SHALL CONTACT COMMON GROUND ALLIANCE AT 811 OR CALL811.COM TO VERIFY LOCATIONS OF ALL UNDERGROUND UTILITIES PRIOR TO INSTALLATION OF ANY PLANTS OR LANDSCAPE MATERIAL.
2. ACTUAL LOCATION OF PLANT MATERIAL IS SUBJECT TO FIELD AND SITE CONDITIONS.
3. NO PLANTING WILL BE INSTALLED UNTIL ALL GRADING AND CONSTRUCTION HAS BEEN COMPLETED IN THE IMMEDIATE AREA.
4. ALL SUBSTITUTIONS MUST BE APPROVED BY THE LANDSCAPE ARCHITECT PRIOR TO SUBMISSION OF ANY BID AND/OR QUOTE BY THE LANDSCAPE CONTRACTOR.
5. CONTRACTOR SHALL PROVIDE TWO YEAR GUARANTEE OF ALL PLANT MATERIALS. THE GUARANTEE BEGINS ON THE DATE OF THE LANDSCAPE ARCHITECT'S OR OWNER'S WRITTEN ACCEPTANCE OF THE INITIAL PLANTING. REPLACEMENT PLANT MATERIAL SHALL HAVE A ONE YEAR GUARANTEE COMMENCING UPON PLANTING.
6. ALL PLANTS TO BE SPECIMEN GRADE, MINNESOTA-GROWN AND/OR HARDY. SPECIMEN GRADE SHALL ADHERE TO, BUT IS NOT LIMITED BY, THE FOLLOWING STANDARDS:
   ALL PLANTS SHALL BE FREE FROM DISEASE, PESTS, WOUNDS, SCARS, ETC.
   ALL PLANTS SHALL BE FREE FROM NOTICEABLE GAPS, HOLES, OR DEFORMITIES.
   ALL PLANTS SHALL BE FREE FROM BROKEN OR DEAD BRANCHES.
   ALL PLANTS SHALL HAVE HEAVY, HEALTHY BRANCHING AND LEAFING.
   CONIFEROUS TREES SHALL HAVE AN ESTABLISHED MAIN LEADER AND A HEIGHT TO WIDTH RATIO OF NO LESS THAN 5:3.
7. PLANTS TO MEET AMERICAN STANDARD FOR NURSERY STOCK (ANSI Z60.1-2014 OR MOST CURRENT VERSION) REQUIREMENTS FOR SIZE AND TYPE SPECIFIED.
8. PLANTS TO BE INSTALLED AS PER MNLA & ANSI STANDARD PLANTING PRACTICES.
9. PLANTS SHALL BE IMMEDIATELY PLANTED UPON ARRIVAL AT SITE. PROPERLY HEEL-IN MATERIALS IF NECESSARY; TEMPORARY ONLY.
10. PRIOR TO PLANTING, FIELD VERIFY THAT THE ROOT COLLAR/ROOT FLAIR IS LOCATED AT THE TOP OF THE BALLED & BURLAP TREE. IF THIS IS NOT THE CASE, SOIL SHALL BE REMOVED DOWN TO THE ROOT COLLAR/ROOT FLAIR. WHEN THE BALLED & BURLAP TREE IS PLANTED, THE ROOT COLLAR/ROOT FLAIR SHALL BE EVEN OR SLIGHTLY ABOVE FINISHED GRADE.
11. OPEN TOP OF BURLAP ON BB MATERIALS; REMOVE POT ON POTTED PLANTS; SPLIT AND BREAK APART PEAT POTS.
12. PRUNE PLANTS AS NECESSARY - PER STANDARD NURSERY PRACTICE AND TO CORRECT POOR BRANCHING OF EXISTING AND PROPOSED TREES.
13. WRAP ALL SMOOTH-BARKED TREES - FASTEN TOP AND BOTTOM. REMOVE BY APRIL 1ST.
14. STAKING OF TREES AS REQUIRED; REPOSITION, PLUMB AND STAKE IF NOT PLUMB AFTER ONE YEAR.
15. THE NEED FOR SOIL AMENDMENTS SHALL BE DETERMINED UPON SITE SOIL CONDITIONS PRIOR TO PLANTING. LANDSCAPE CONTRACTOR SHALL NOTIFY LANDSCAPE ARCHITECT FOR THE NEED OF ANY SOIL AMENDMENTS.
16. BACKFILL SOIL AND TOPSOIL TO ADHERE TO MN/DOT STANDARD SPECIFICATION 3877 (SELECT TOPSOIL BORROW) AND TO BE EXISTING TOP SOIL FROM SITE FREE OF ROOTS, ROCKS LARGER THAN ONE INCH, SUBSOIL DEBRIS, AND LARGE WEEDS UNLESS SPECIFIED OTHERWISE. MINIMUM 4" DEPTH TOPSOIL FOR ALL LAWN GRASS AREAS AND 12" DEPTH TOPSOIL FOR TREE, SHRUBS, AND PERENNIALS.
17. MULCH TO BE AT ALL TREE, SHRUB, PERENNIAL, AND MAINTENANCE AREAS. TREE AND SHRUB PLANTING BEDS SHALL HAVE 4" DEPTH OF DOUBLE SHREDDED HARDWOOD MULCH. DOUBLE SHREDDED HARDWOOD MULCH TO BE USED AROUND ALL PLANTS WITHIN TURF AREAS. PERENNIAL AND ORNAMENTAL GRASS BEDS SHALL HAVE 3" DEPTH DOUBLE SHREDDED HARDWOOD MULCH. MULCH TO BE FREE OF DELETERIOUS MATERIAL. ROCK MULCH SHALL BE USED FOR ALL LANDSCAPE ISLANDS WITHIN PARKING LOTS AND INTERIOR OR THE SITE. THE ROCK TYPE SHALL BE LOCALLY SOURCED, DECORATIVE EARTH TONE COLORS OF TAN AND GRAY, 1" TO 2" DIAMETER, AND INSTALLED AT 3" DEPTH OR AS APPROPRIATE FOR THE SELECTED MATERIAL. FILTER FABRIC SHALL BE INSTALLED BELOW THE ROCK MULCH AS A WEED BARRIER.
18. EDGING TO BE COMMERCIAL GRADE COL-MET (OR EQUAL) STEEL EDGING; 3/16" THICK, COLOR BLACK, OR SPADED EDGE, AS INDICATED. STEEL EDGING SHALL BE PLACED WITH SMOOTH CURVES AND STAKED WITH METAL SPIKES NO GREATER THAN 4 FOOT ON CENTER WITH TOP OF EDGER AT GRADE, FOR MOWERS TO CUT ABOVE WITHOUT DAMAGE. UTILIZE CURBS AND SIDEWALKS FOR EDGING WHERE POSSIBLE. SPADED EDGE TO PROVIDE V-SHAPED DEPTH AND WIDTH TO CREATE SEPARATION BETWEEN MULCH AND GRASS. INDIVIDUAL TREE, SHRUB, OR RAIN-GARDEN BEDS TO BE SPADED EDGE, UNLESS NOTED OTHERWISE. EDGING TO MATCH EXISTING CONDITIONS (WHERE APPLICABLE).
19. ALL DISTURBED AREAS TO BE SODDED OR SEEDED, UNLESS OTHERWISE NOTED. SOD TO BE STANDARD MINNESOTA GROWN AND HARDY BLUEGRASS MIX, FREE OF LAWN WEEDS. ALL TOPSOIL AREAS TO BE RAKED TO REMOVE DEBRIS AND ENSURE DRAINAGE. SLOPES OF 3:1 OR GREATER SHALL BE STAKED. SEED AS SPECIFIED AND PER MN/DOT SPECIFICATIONS. IF NOT INDICATED ON LANDSCAPE PLAN, SEE EROSION CONTROL PLAN.
20. PROVIDE IRRIGATION TO ALL PLANTED AREAS ON SITE. IRRIGATION SYSTEM TO BE DESIGN/BUILD BY LANDSCAPE CONTRACTOR. LANDSCAPE CONTRACTOR TO PROVIDE SHOP DRAWINGS TO LANDSCAPE ARCHITECT FOR APPROVAL PRIOR TO INSTALLATION OF IRRIGATION SYSTEM. CONTRACTOR TO PROVIDE OPERATION MANUALS, AS-BUILT PLANS, AND NORMAL PROGRAMMING. SYSTEM SHALL BE WINTERIZED AND HAVE SPRING STARTUP DURING FIRST YEAR OF OPERATION. SYSTEM SHALL HAVE ONE-YEAR WARRANTY ON ALL PARTS AND LABOR. ALL INFORMATION ABOUT INSTALLATION AND SCHEDULING CAN BE OBTAINED FROM THE GENERAL CONTRACTOR.
21. CONTRACTOR SHALL PROVIDE NECESSARY WATERING OF PLANT MATERIALS UNTIL THE PLANT IS FULLY ESTABLISHED OR IRRIGATION SYSTEM IS OPERATIONAL. OWNER WILL NOT PROVIDE WATER FOR CONTRACTOR.
22. REPAIR, REPLACE, OR PROVIDE SOD/SEED AS REQUIRED FOR ANY ROADWAY BOULEVARD AREAS ADJACENT TO THE SITE DISTURBED DURING CONSTRUCTION.
23. REPAIR ALL DAMAGE TO PROPERTY FROM PLANTING OPERATIONS AT NO COST TO OWNER.
24. MAINTAIN TREES, SHRUBS, AND OTHER PLANTS UNTIL PROJECT COMPLETION, BUT IN NO CASE, LESS THAN FOLLOWING PERIOD; 1 YEAR AFTER PROJECT COMPLETION. MAINTAIN TREES, SHRUBS, AND OTHER PLANTS BY PRUNING, CULTIVATING, AND WEEDING AS REQUIRED FOR HEALTHY GROWTH. RESTORE PLANTING SAUCERS. TIGHTEN AND REPAIR STAKE AND GUY SUPPORTS AND RESET TREES AND SHRUBS TO PROPER GRADES OR VERTICAL POSITION AS REQUIRED. RESTORE OR REPLACE DAMAGED WRAPPINGS. SPRAY AS REQUIRED TO KEEP TREES AND SHRUBS FREE OF INSECTS AND DISEASE. REPLENISH MULCH TO THE REQUIRED DEPTH. MAINTAIN LAWNS FOR 45 DAYS AFTER INSTALLING SOD INCLUDING MOWING WHEN SOD RECITES 4" IN HEIGHT. WEED PLANTING BEDS AND MULCH SAUCERS AT MINIMUM ONCE A MONTH DURING THE GROWING SEASON. PROVIDE A MONTHLY REPORT TO THE OWNER ON WEEDING AND OTHER MAINTENANCE RESPONSIBILITIES.
25. SEE ELECTRICAL PLANS FOR SITE LIGHTING DETAILS.

ADDITIONAL TOPSOIL NOTES

1. SUBGRADE MATERIAL SHALL BE PROVIDED IN ALL PLANTING AREAS. MATERIAL SHALL BE FREE OF CONTAMINANTS AND RUBBLE, AND MINIMUM DRAINAGE CHARACTERISTICS TO AVOID STANDING OR DAMMING WATER.
2. HIGH-QUALITY TOP SOIL SHALL BE IMPORTED AND GRADED BY GENERAL CONTRACTOR TO THE FOLLOWING MINIMUM DEPTHS BELOW FINISHED GRADE.
   -PLANTING BEDS: 18 INCHES
   -ALL OTHER AREAS 6 INCHES
3. IMPORTED TOPSOIL SHALL BE SELECT, FERTILE, SCREENED TO ONE-HALF INCH, WELL DRAINED, WEED-FREE, BALANCED MATERIAL COMPOSED OF SAND, COMPOST AND A SMALL AMOUNT OF CLAY/SILT TO BE CLASSIFIED AS SANDY LOAM UNDER USDA CLASSIFICATION.
   -TEST TOPSOIL AT APPROVED TESTING LAB FOR CONFIRMATION OF SOIL TEXTURE AND CLASSIFICATION.
   -IF CLASSIFIED AS SANDY LOAM, THEN TEST FOR PH, TRACE MINERALS, SALINITY, N, P, K AND AMENDMENT RECOMMENDATIONS TO ACHIEVE A PH BALANCED FERTILE TOPSOIL WITH MINIMUM SIX (6%) PERCENT ORGANIC MATERIALS DERIVED FROM VEGETATIVE COMPOST. INCORPORATE STARTER FERTILIZER AND PLANT TABS PLUS FERTILIZER AND SOIL AMENDMENTS AS RECOMMENDED IN REPORT AT NO ADDITIONAL COST.
4. SUBMIT SAMPLES OF EXISTING ONSITE SOIL MATERIALS TO COSTCO WHOLESALE FOR LABORATORY TESTING TO EVALUATE THE SUITABILITY OF THE EXISTING SOILS FOR USE AS TOPSOIL FOR NEW LANDSCAPING.
5. WHERE THE GEOTECHNICAL FINDINGS INDICATE THAT EXISTING NATIVE SOILS EXPECTED TO BE IN PLACE MEET THE USDA SANDY LOAM TOPSOIL CLASSIFICATION WITH THE ADDITION OF COMPOST AND FERTILIZER, THIS MINIMUM REQUIREMENT MAY BE ALTERED PROVIDED THAT COSTCO WHOLESALE APPROVES THIS IN ADVANCE IN WRITING BASED ON:
   -DOCUMENTATION THAT THE MATERIAL MEETS THE TOPSOIL STANDARD NOTED ABOVE UNDER "IMPORT TOPSOIL".
   -THAT SUFFICIENT QUANTITIES TO SATISFY THE MINIMUM DEPTHS ARE READILY AVAILABLE.
   -THAT A COMPLETE SOILS TEST IS UTILIZED EARLY TO IDENTIFY DEFICIENT COMPONENTS (ORGANIC MATTER TO ACHIEVE SIX (6%) PERCENT BY VOLUME, FERTILIZER, AMENDMENTS) AND THESE AMENDMENTS WILL BE PRE-MIXED.
   -THAT A PROTECTED ON-SITE LOCATION IS SUFFICIENT FOR STOCKPILING, SCREENING, AND BLENDING.
   -THAT THE PROJECT CONSTRUCTION DOCUMENTS ARE MODIFIED TO INDICATE ALL OF THE ABOVE.
6. PLACE TOPSOIL AFTER THOROUGHLY ROTOTILLING OR RIPPING ENTIRE SUBGRADE TO ALLOW INTERMIXING OF TOPSOIL AND SUB-SOILS. PLACE IN TWO LIFTS AS FOLLOWS: ROTOTILL OR RIP SUBGRADE AND PLACE HALF OF THE TOPSOIL THOROUGHLY INCORPORATING IT WITH SUBSOIL. THEN CAP WITH THE REMAINING HALF OF TOPSOIL.
7. COSTCO WHOLESALE RESERVES THE RIGHT TO RETEST THE MATERIAL AND REQUIRE ADDITIONAL AMENDMENTS, FERTILIZER, ORGANICS TO ACHIEVE THE STATED STANDARD.

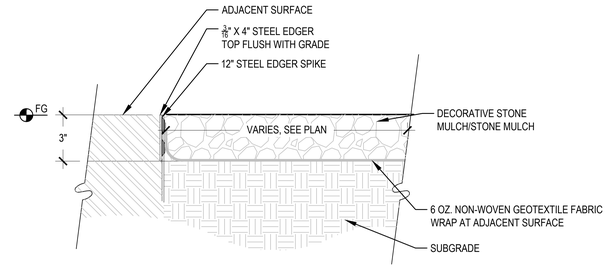

4 STONE MULCH

3" = 1'-0"

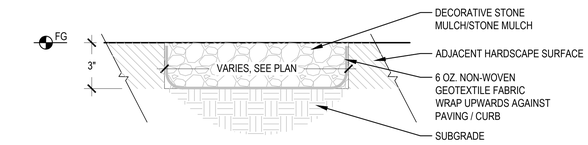

5 STONE MULCH ADJACENT TO HARDSCAPE

3" = 1'-0"

CONSULTANT
Kimley»Horn
© 2021 KIMLEY-HORN AND ASSOCIATES, INC.
4201 WINFIELD ROAD, SUITE 600
WARRENVILLE, IL 60555
PHONE: 630-487-5550
WWW.KIMLEY-HORN.COM

811 Know what's below. Call before you dig.

I HEREBY CERTIFY THAT THIS PLAN, SPECIFICATION, OR REPORT WAS PREPARED BY ME OR UNDER MY SUPERVISION AND THAT I AM A DULY LICENSED PROFESSIONAL LANDSCAPE ARCHITECT UNDER THE LAWS OF THE STATE OF MINNESOTA.

SIGNATURE:

RYAN A. HYLLESTED

DATE: 1/05/2022 LIC. NO. 53828

COSTCO WHOLESALE

NWC OF HAZELTINE BLVD & OAKRIDGE DR
CHASKA, MN

DATE	ISSUED FOR	REV

L2.1

LANDSCAPE NOTES AND DETAILS

AS INDICATED

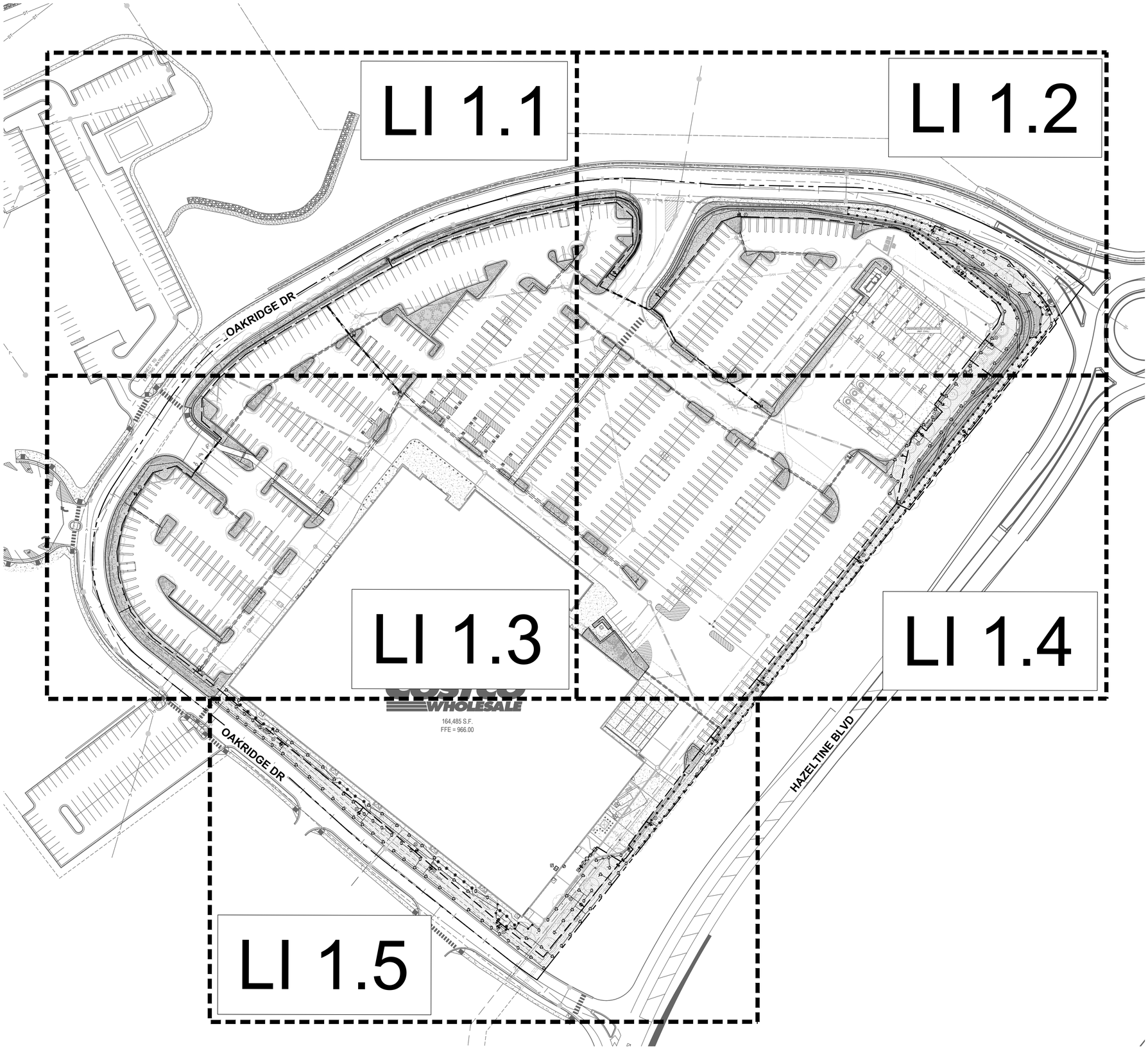

CONSULTANT
Kimley»Horn
© 2021 KIMLEY-HORN AND ASSOCIATES, INC.
767 EUSTIC STREET, SUITE 100
ST. PAUL, MN 55114
PHONE: 651-645-4197
WWW.KIMLEY-HORN.COM

NORTH ARROW AND SCALE

NORTH

GRAPHIC SCALE IN FEET
0 25 50 100

I HEREBY CERTIFY THAT THIS PLAN, SPECIFICATION, OR REPORT WAS PREPARED BY ME OR UNDER MY SUPERVISION AND THAT I AM A DULY LICENSED PROFESSIONAL LANDSCAPE ARCHITECT UNDER THE LAWS OF THE STATE OF MINNESOTA

SIGNATURE:

RYAN A. HYLLESTED

DATE: 01/5/2022 LIC. NO. 53828

COSTCO WHOLESALE

NWC OF HAZELTINE BLVD & OAKRIDGE DR
CHASKA, MN

DATE	ISSUED FOR	REV

LI 1.0

OVERALL IRRIGATION PLAN

AS INDICATED

KEY MAP

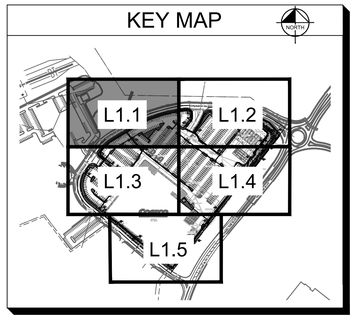

NOTE:
SEE SHEET LI 3.2 FOR IRRIGATION SCHEDULE/ QUANTITIES, AND ADDITIONAL NOTES.

NOTE:
SEE SHEETS LI 3.1 & LI 3.2 FOR DETAILS & SPECIFICATIONS.

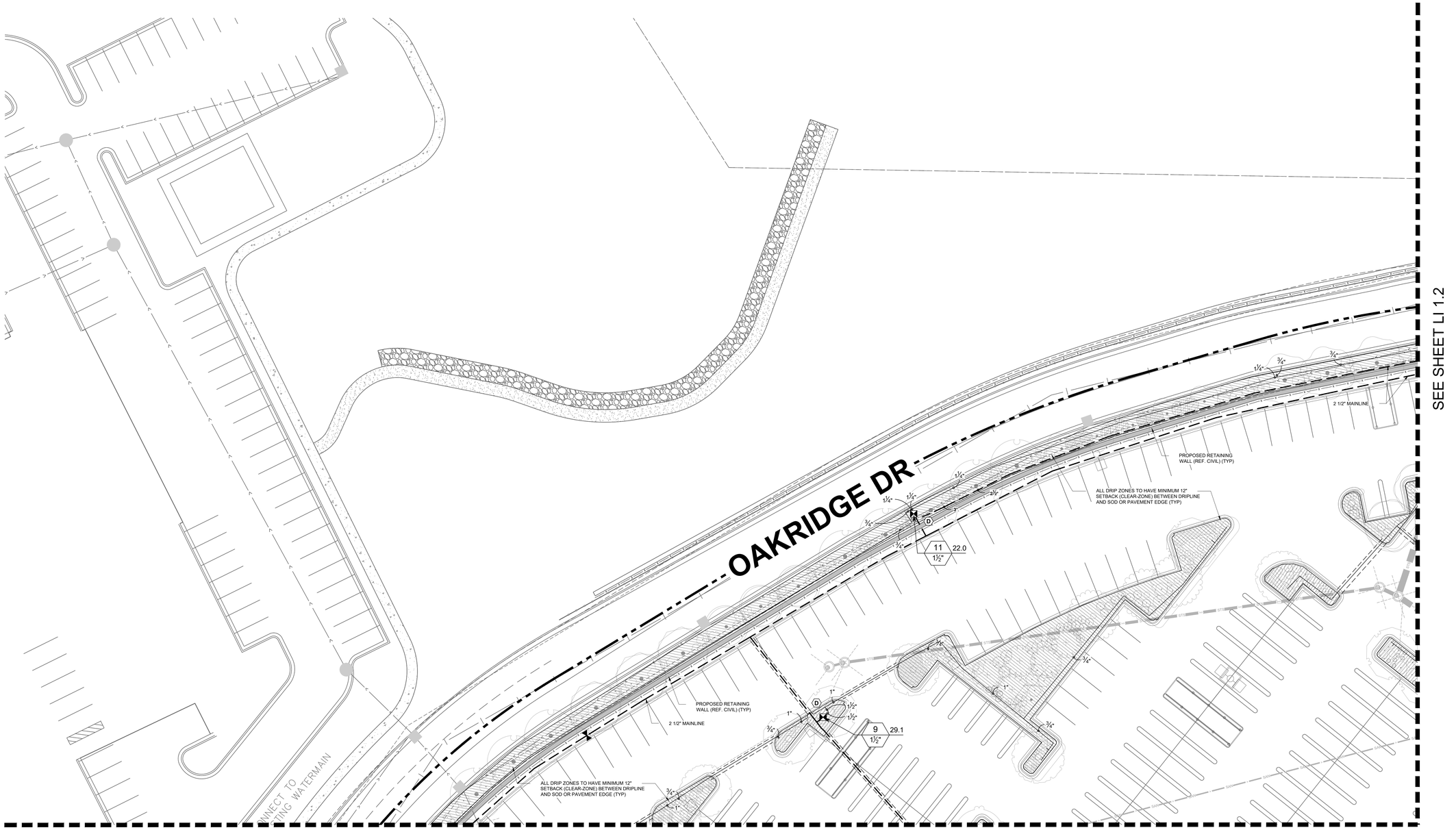

CONSULTANT

Kimley»Horn

© 2021 KIMLEY-HORN AND ASSOCIATES, INC.
767 EUSTIC STREET, SUITE 100
ST. PAUL, MN 55114
PHONE: 651-645-4197
WWW.KIMLEY-HORN.COM

NORTH ARROW AND SCALE

NORTH

GRAPHIC SCALE IN FEET
0 10 20 40

I HEREBY CERTIFY THAT THIS PLAN, SPECIFICATION, OR REPORT WAS PREPARED BY ME OR UNDER MY SUPERVISION AND THAT I AM A DULY LICENSED PROFESSIONAL LANDSCAPE ARCHITECT UNDER THE LAWS OF THE STATE OF MINNESOTA

SIGNATURE:

RYAN A. HYLLESTED

DATE: 01/5/2022 LIC. NO. 53828

COSTCO WHOLESALE

NWC OF HAZELTINE BLVD & OAKRIDGE DR
CHASKA, MN

DATE	ISSUED FOR	REV

LI 1.1

IRRIGATION PLAN

AS INDICATED

KEY MAP

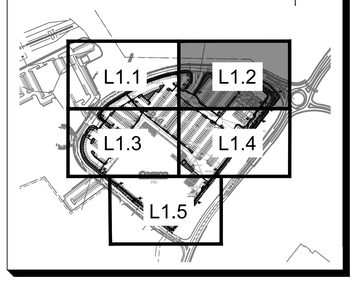

NOTE:
SEE SHEET LI 3.2 FOR IRRIGATION SCHEDULE/ QUANTITIES, AND ADDITIONAL NOTES.

NOTE:
SEE SHEETS LI 3.1 & LI 3.2 FOR DETAILS & SPECIFICATIONS.

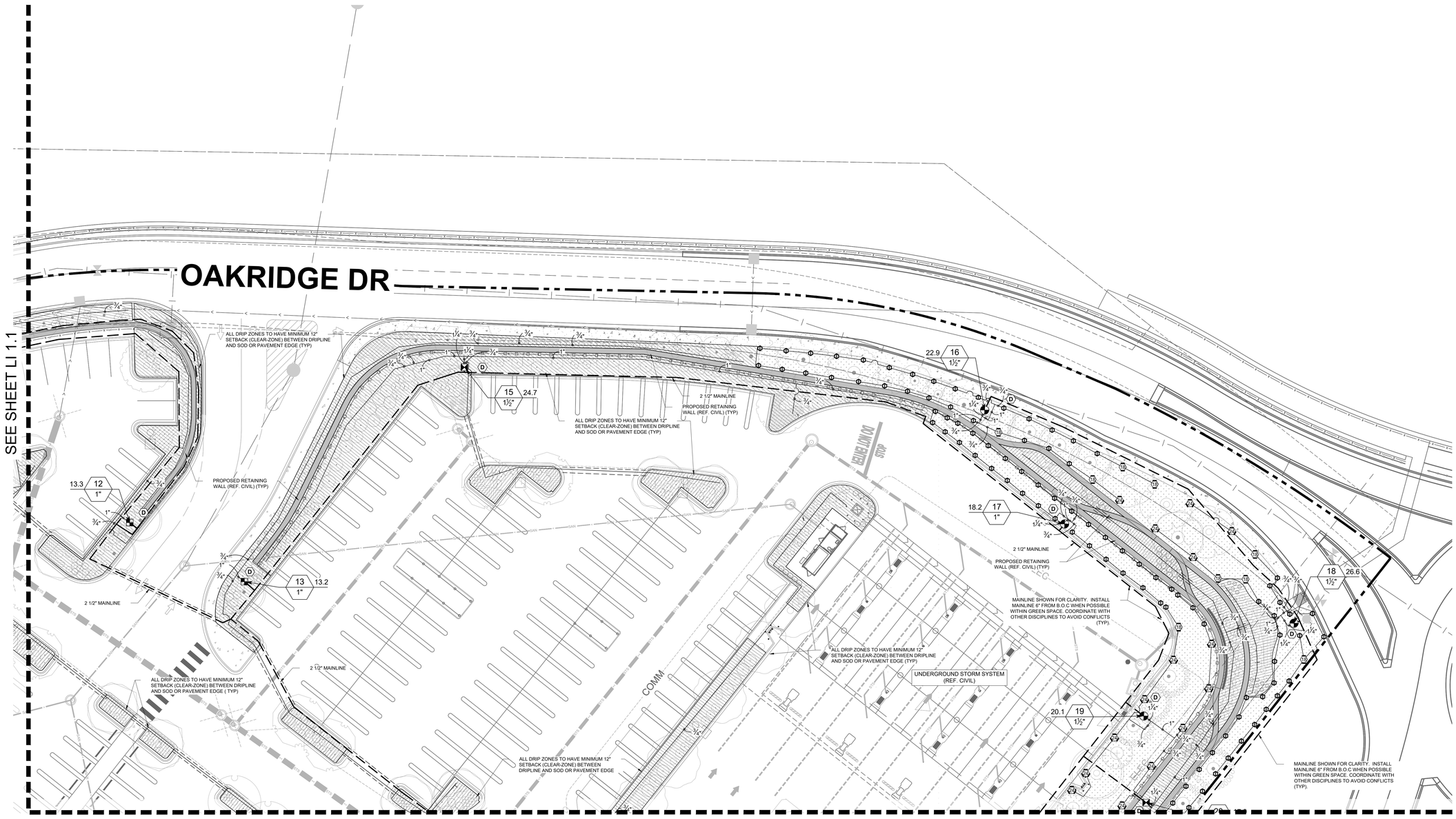

CONSULTANT

Kimley»Horn

© 2021 KIMLEY-HORN AND ASSOCIATES, INC.
767 EUSTIC STREET, SUITE 100
ST. PAUL, MN 55114
PHONE: 651-645-4197
WWW.KIMLEY-HORN.COM

NORTH ARROW AND SCALE

NORTH

GRAPHIC SCALE IN FEET
0 10 20 40

I HEREBY CERTIFY THAT THIS PLAN, SPECIFICATION, OR REPORT WAS PREPARED BY ME OR UNDER MY SUPERVISION AND THAT I AM A DULY LICENSED PROFESSIONAL LANDSCAPE ARCHITECT UNDER THE LAWS OF THE STATE OF MINNESOTA

SIGNATURE:

RYAN A. HYLLESTED

DATE: 01/5/2022 LIC. NO. 53828

COSTCO WHOLESALE

NWC OF HAZELTINE BLVD & OAKRIDGE DR
CHASKA, MN

DATE	ISSUED FOR	REV

LI 1.2

IRRIGATION PLAN

AS INDICATED

KEY MAP

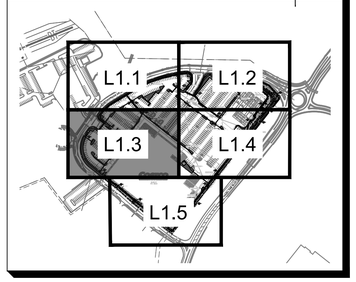

NOTE:
SEE SHEET LI 3.2 FOR IRRIGATION SCHEDULE/ QUANTITIES, AND ADDITIONAL NOTES.

NOTE:
SEE SHEETS LI 3.1 & LI 3.2 FOR DETAILS & SPECIFICATIONS.

SEE SHEET LI 1.1

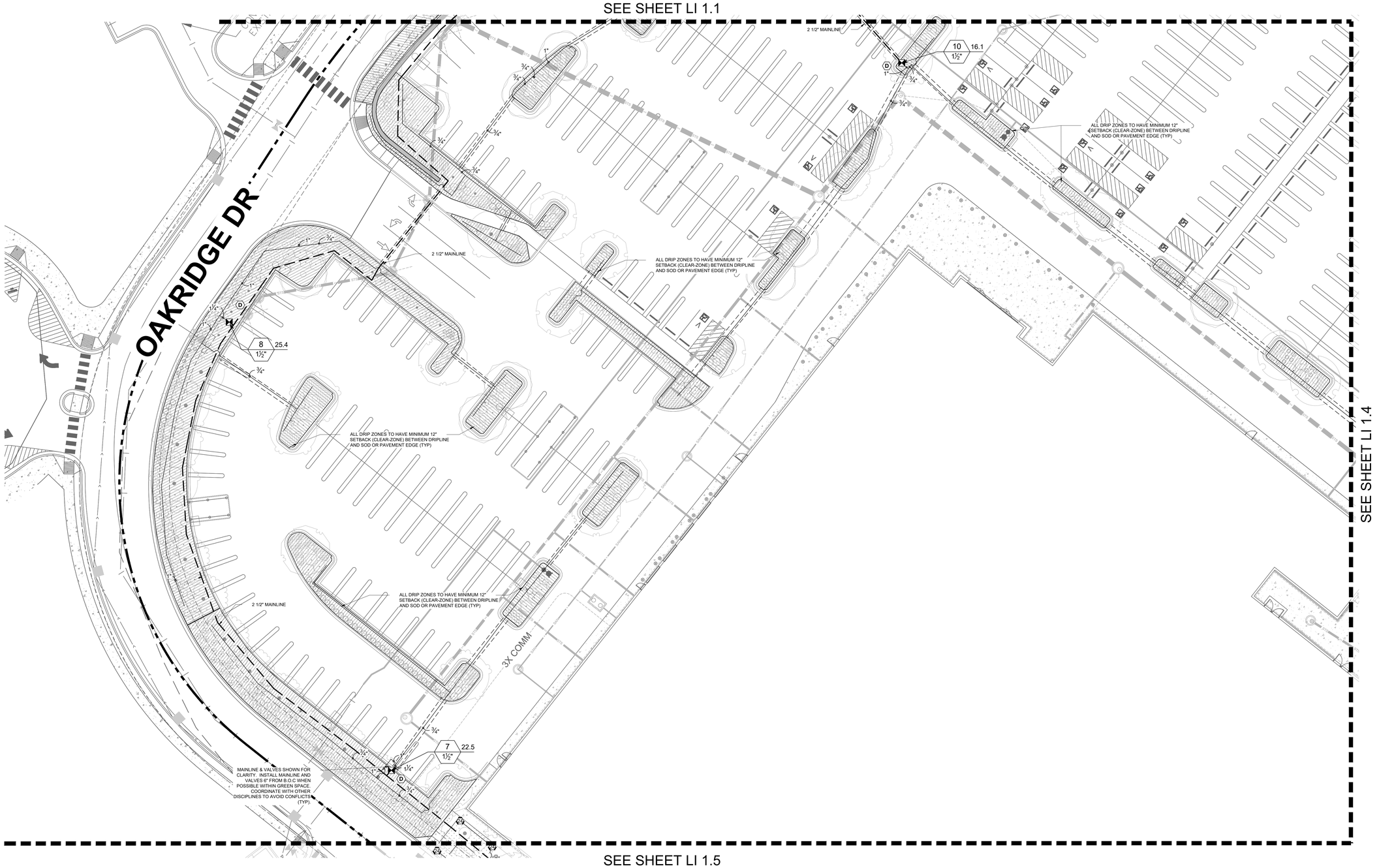

SEE SHEET LI 1.4

SEE SHEET LI 1.5

CONSULTANT

Kimley»Horn

© 2021 KIMLEY-HORN AND ASSOCIATES, INC.
767 EUSTIC STREET, SUITE 100
ST. PAUL, MN 55114
PHONE: 651-645-4197
WWW.KIMLEY-HORN.COM

NORTH ARROW AND SCALE

NORTH

GRAPHIC SCALE IN FEET
0 10 20 40

I HEREBY CERTIFY THAT THIS PLAN, SPECIFICATION, OR REPORT WAS PREPARED BY ME OR UNDER MY SUPERVISION AND THAT I AM A DULY LICENSED PROFESSIONAL LANDSCAPE ARCHITECT UNDER THE LAWS OF THE STATE OF MINNESOTA

SIGNATURE:

RYAN A. HYLLESTED

DATE: 01/5/2022 LIC. NO. 53828

COSTCO WHOLESALE

NWC OF HAZELTINE BLVD & OAKRIDGE DR
CHASKA, MN

DATE	ISSUED FOR	REV

LI 1.3

IRRIGATION PLAN

AS INDICATED

11/5/2021 5:26:54 PM

KEY MAP

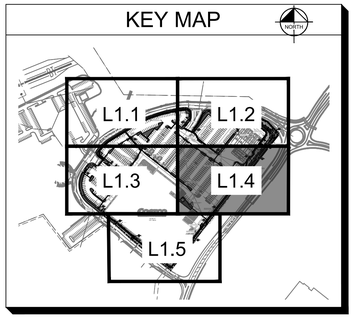

NOTE:
SEE SHEET LI 3.2 FOR IRRIGATION SCHEDULE/ QUANTITIES, AND ADDITIONAL NOTES.

NOTE:
SEE SHEETS LI 3.1 & LI 3.2 FOR DETAILS & SPECIFICATIONS.

SEE SHEET LI 1.2

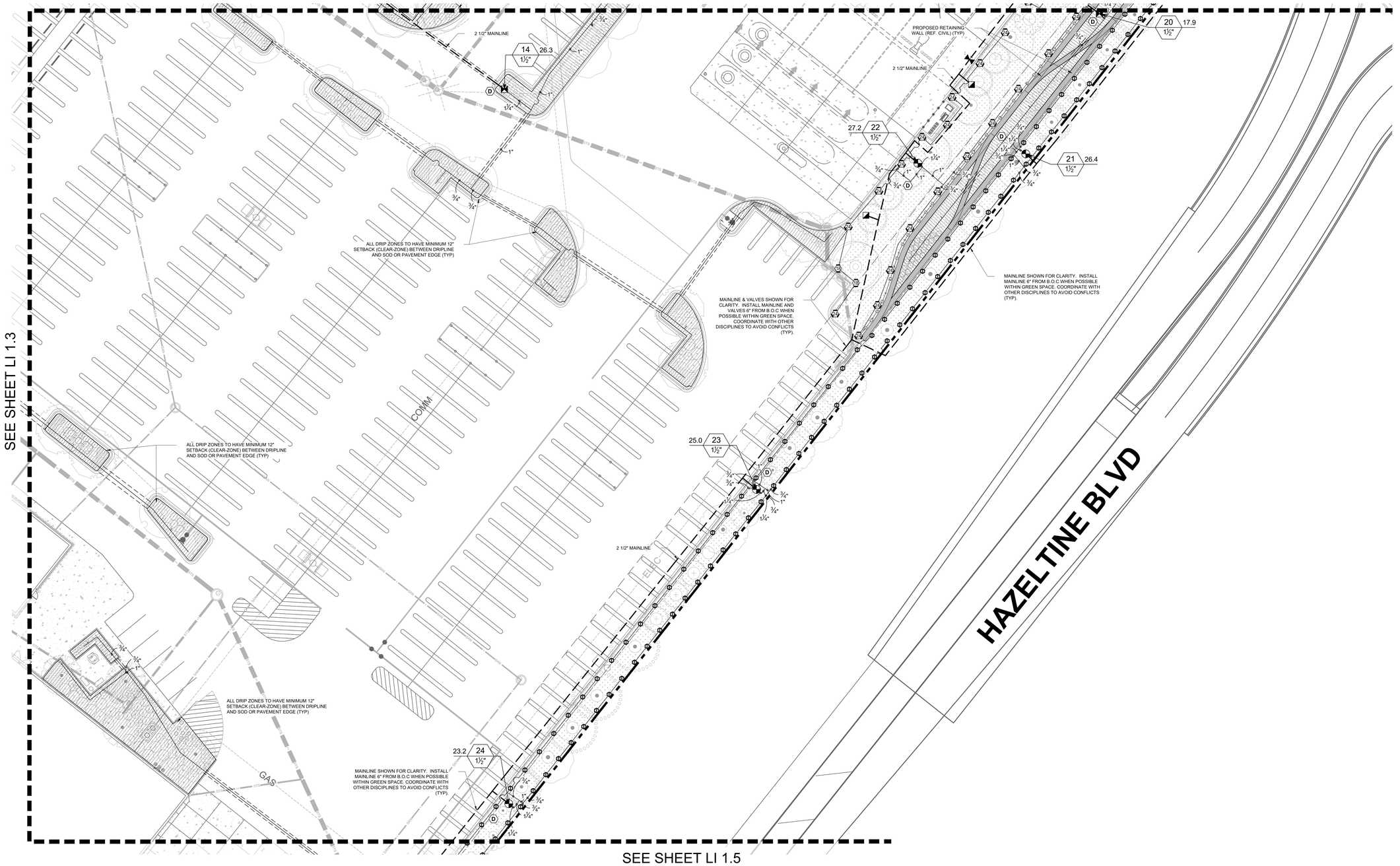

CONSULTANT
Kimley»Horn
© 2021 KIMLEY-HORN AND ASSOCIATES, INC.
767 EUSTIC STREET, SUITE 100
ST. PAUL, MN 55114
PHONE: 651-645-4197
WWW.KIMLEY-HORN.COM

NORTH ARROW AND SCALE

NORTH

GRAPHIC SCALE IN FEET
0 10 20 40

I HEREBY CERTIFY THAT THIS PLAN, SPECIFICATION, OR REPORT WAS PREPARED BY ME OR UNDER MY SUPERVISION AND THAT I AM A DULY LICENSED PROFESSIONAL LANDSCAPE ARCHITECT UNDER THE LAWS OF THE STATE OF MINNESOTA

SIGNATURE:

RYAN A. HYLLESTED

DATE: 01/5/2022 LIC. NO. 53828

COSTCO WHOLESALE

NWC OF HAZELTINE BLVD & OAKRIDGE DR
CHASKA, MN

DATE	ISSUED FOR	REV

LI 1.4

IRRIGATION PLAN

AS INDICATED

SEE SHEET LI 1.3

SEE SHEET LI 1.4

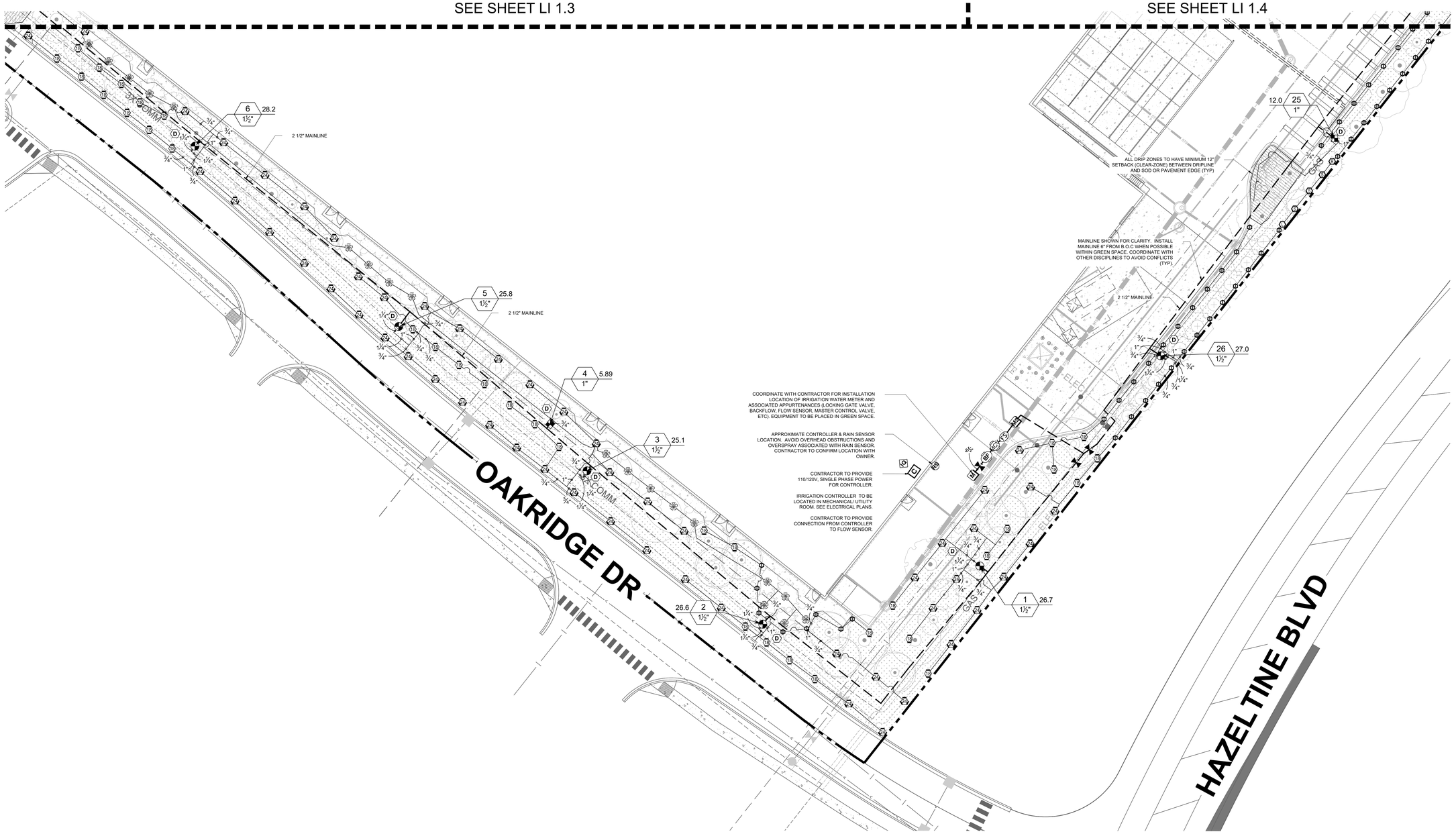

NOTE:
SEE SHEET LI 3.2 FOR IRRIGATION SCHEDULE/ QUANTITIES, AND ADDITIONAL NOTES.

NOTE:
SEE SHEETS LI 3.1 & LI 3.2 FOR DETAILS & SPECIFICATIONS.

KEY MAP

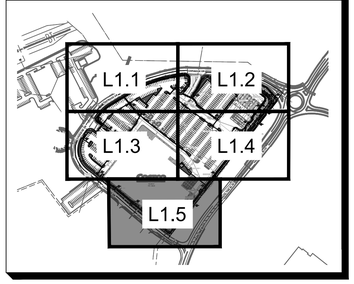

CONSULTANT

Kimley»Horn

© 2021 KIMLEY-HORN AND ASSOCIATES, INC.

767 EUSTIC STREET, SUITE 100
ST. PAUL, MN 55114
PHONE: 651-645-4197
WWW.KIMLEY-HORN.COM

NORTH ARROW AND SCALE

NORTH

GRAPHIC SCALE IN FEET
0 10 20 40

I HEREBY CERTIFY THAT THIS PLAN, SPECIFICATION, OR REPORT WAS PREPARED BY ME OR UNDER MY SUPERVISION AND THAT I AM A DULY LICENSED PROFESSIONAL LANDSCAPE ARCHITECT UNDER THE LAWS OF THE STATE OF MINNESOTA

SIGNATURE:

RYAN A. HYLLESTED

DATE: 01/5/2022 LIC. NO. 53828

COSTCO WHOLESALE

NWC OF HAZELTINE BLVD & OAKRIDGE DR
CHASKA, MN

DATE	ISSUED FOR	REV

LI 1.5

IRRIGATION PLAN

AS INDICATED

11/5/2021 5:26:54 PM

NOTE: All ICD 100 DECODERS SHALL HAVE THE FOLLOWING ADDRESS AND CORRESPONDING COLOR
ADDRESS 1 = Black

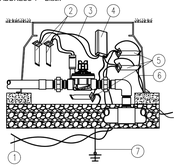

1. ID WIRE PATH TWISTED TO NEXT DECODER
2. DBY (2)
3. TWO BLACK WIRES TO VALVE SOLENOID/UP TO 150 FT /45M
4. MODEL RAIN BIRD FD-101TURF DECODER
5. DBY-6 (3)
6. ID WIRE PATH FROM CONTROLLER ALLOW 5 ft/1.5M SLACK PER DECODER/1/2 ON EITHER SIDE OF DECODER
7. TO EARTH GROUND INSTALLED PER ASIC GUIDELINES. 1 PER 12 DECODERS OR EVERY 1000ft./330M.

RAIN BIRD FD-101TURF DECODER

Scale: N.T.S.

O

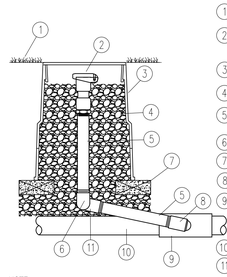

1. FINISH GRADE
2. QUICK-COUPLING VALVE TWO-PIECE BODY WITH 1 INCH INLET AND 1 INCH KEY OUTLET
3. VALVE BOX WITH COVER
4. 3/4" MINUS WASHED GRAVEL
5. PVC SCH 80 NIPPLE-1" (LENGTH AS REQUIRED)
6. PVC SCH 40 STREET ELL-1"
7. BRICK SUPPORTS (2)
8. PVC SCH 40 STREET ELL-1"
9. PVC SCH 40 TEE OR ELL X 1"
10. PVC MAINLINE PIPE
11. PVC SCH 40 ELL-1"

NOTE:
1. FURNISH FITTINGS AND PIPING NOMINALLY SIZED IDENTICAL TO NOMINAL QUICK COUPLING VALVE INLET SIZE.

QUICK COUPLING VALVE

Scale: N.T.S.

K

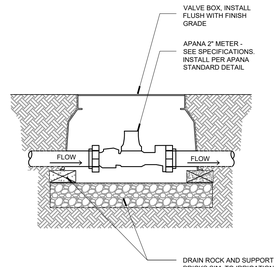

VALVE BOX, INSTALL FLUSH WITH FINISH GRADE

APANA 2" METER - SEE SPECIFICATIONS. INSTALL PER APANA STANDARD DETAIL

DRAIN ROCK AND SUPPORT BRICKS SIM. TO IRRIGATION VALVE BOXES

APANA WATER METER

Scale: N.T.S.

H

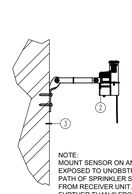

1. WR2 WIRELESS SENSOR RECEIVER
2. MODEL RAINBIRD WR2-RFC
3. MOUNTING SURFACE

NOTE:
MOUNT SENSOR ON ANY SURFACE WHERE IT WILL BE EXPOSED TO UNOBSTRUCTED RAINFALL, BUT NOT IN PATH OF SPRINKLER SPRAY, NO MORE THAN 300' FROM RECEIVER UNIT. MOUNT RECEIVER UNIT NO FURTHER THAN 6' FROM CONTROLLER.

Wireless Rain/Freeze Sensor

Scale: N.T.S.

D

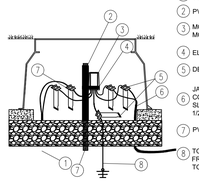

1. JACKETED ID WIRE PATH TO NEXT DECODER
2. PVC PIPE 1" SCH 40
3. MODEL DUAL-S SURGE PROTECTION MODULE
4. ELECTRICAL CABLE TIE - 12"
5. DBRY-6 (5)
6. JACKETED ID WIRE PATH FROM CONTROLLER ALLOW 5 ft/1.5M SLACK PER SURGE DEVICE 1/2 ON EITHER SIDE
7. PVC PIPE .75" SCH 40
8. TO EARTH GROUND 8FT/2.5M FROM DUAL-S AT RIGHT ANGLE TO THE 2-WIRE PATH

DUAL-S SURGE DEVICE

Scale: N.T.S.

N

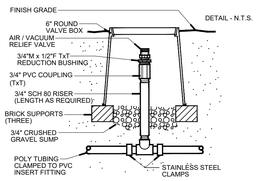

DETAIL - N.T.S.

Air/Vacuum Relief (Plumbed to Poly)

Scale: N.T.S.

J

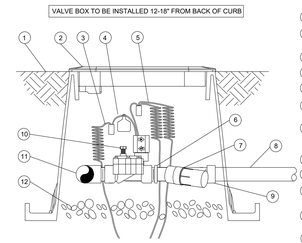

1. FINISH GRADE
2. STANDARD VALVE BOX WITH COVER
3. WATERPROOF CONNECTION
4. VALVE ID TAG
5. 30-INCH LINEAR LENGTH OF WIRE, COILED
6. 1" X ½" REDUCING COUPLING
7. PRESSURE REGULATING FILTER
8. LATERAL PIPE
9. PVC SCH 40 FEMALE ADAPTOR OR REDUCER
10. REMOTE CONTROL VALVE
11. PVC SCH 40 TEE OR ELL TO MANIFOLD
12. 3-INCH MINIMUM DEPTH OF 3/4-INCH WASHED GRAVEL

Drip Control Zone Kit

Scale: N.T.S.

G

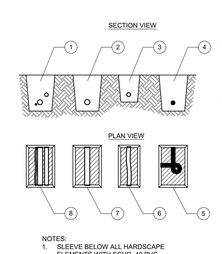

1. MAINLINE, LATERAL AND WIRING IN THE SAME TRENCH - 18" MIN. DEPTH
2. MAINLINE PIPE - 18" MIN. DEPTH
3. LATERAL PIPE - 12" MIN. DEPTH
4. WIRING IN CONDUIT - 12" MIN. DEPTH
5. TIE A 24-INCH LOOP IN ALL WIRING AT CHANGES OF DIRECTION OF 30° OR GREATER. UNTIE AFTER ALL CONNECTIONS HAVE BEEN MADE.
6. ALL SOLVENT WELD PLASTIC PIPING TO BE SNAKED IN TRENCH AS SHOWN.
7. ALL SOLVENT WELD PLASTIC PIPING TO BE RAN IN TRENCH AS SHOWN.
8. RUN WIRING BENEATH AND BESIDE MAINLINE. TAPE AND BUNDLE AT 10-FOOT INTERVALS.

NOTES:
1. SLEEVE BELOW ALL HARDSCAPE ELEMENTS WITH SCHD. 40 PVC TWICE THE DIAMETER OF THE PIPE OR WITH BUNDLE WITHIN.
2. FOR PIPE AND WIRE BURIAL DEPTHS SEE SPECIFICATIONS.

Pipe and Wire Trenching

Scale: N.T.S.

C

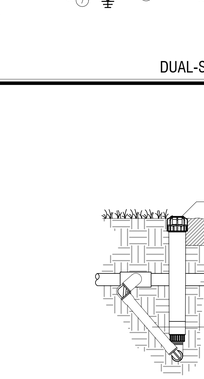

NOTE: ALWAYS FOLLOW LOCAL AND NATIONAL ELECTRIC CODES. CONTRACTOR TO REFERENCE LATEST N.E.C. AND A.S.I.C. REQUIREMENTS ASSOCIATED WITH PROPER GROUNDING OF IRRIGATION SYSTEMS.

CONTROLLER GROUNDING

Scale: N.T.S.

P

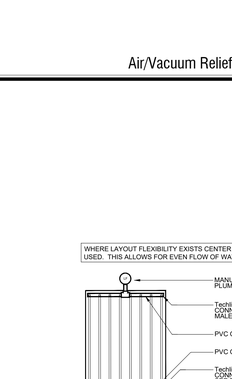

ECO INDICATOR - SWING JOINT

Scale: N.T.S.

M

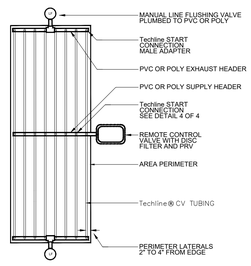

ALL BARBED FITTINGS TO UTILIZE EITHER STAINLESS STEEL HOSE CLAMPS, STEEL CRIMP, OR COMPRESSION RING.

TECHLINE CV-MAXIMUM LENGTH OF A SINGLE LATERAL (FEET)

TECHLINE DRIPPER SPACING	12"				18"				24"	
DRIPPER FLOW RATE (GPH)	0.26	0.4	0.6	0.9	0.26	0.4	0.6	0.9	0.6	0.9
INLET PRESSURE (PSI)										
20	331	242	190	144	468	344	270	204	342	260
25	413	302	238	180	584	429	338	257	430	326
35	518	380	299	227	737	540	426	323	542	412
45	594	436	343	260	845	620	489	371	622	472
55	655	480	378	287	932	684	539	410	686	522
60	681	580	393	298	969	713	561	426	716	544

Techline CV Center Feed Layout

Scale: N.T.S.

I

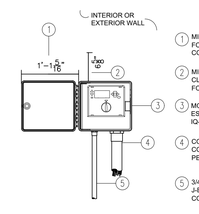

1. MINIMUM CLEARANCE FOR DOOR OPENING CONTRACTOR TO VERIFY PER MODEL***
2. MINIMUM VERTICAL CLEARANCE NEEDED FOR HINGE PIN REMOVAL
3. MODEL RAINBIRD ESP-LXIVM (WITH IQ-CLOUD)
4. CONTROL WIRE IN ELECTRICAL CONDUIT. SIZE AND TYPE PER LOCAL CODE
5. 3/4" POWER SUPPLY CONDUIT J-BOX INSIDE CONTROLLER CONNECT PER LOCAL CODE

NOTE
MOUNT CONTROLLER WITH LCD SCREEN AT EYE LEVEL.
CONTROLLER SHALL BE HARD-WIRED TO GROUNDED 110 or 220 VAC SOURCE.

Controller

Scale: N.T.S.

L

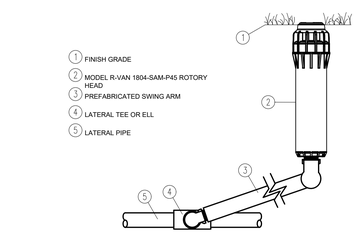

1. FINISH GRADE
2. MODEL R-VAN 1804-SAM-P45 ROTORY HEAD
3. PREFABRICATED SWING ARM
4. LATERAL TEE OR ELL
5. LATERAL PIPE

Rotory Head Detail

Scale: N.T.S.

E

PVC PIPE SIZE	SOLVENT WELD SCH. 40 FITTINGS	BELL AND GASKET FITTINGS	SOCKETED PIPE
1/2"	2"	--	2"
3/4"	2"	--	2"
1"	2 1/2"	--	2 1/2"
1 1/4"	3"	--	3"
1 1/2"	3"	3"	3"
2"	4"	4"	4"
2 1/2"	6"	6"	6"
3"	6"	6"	6"
4"	8"	8"	8"

Sleeve Schedule

Scale: N.T.S.

A

CONSULTANT

Kimley»Horn

© 2021 KIMLEY-HORN AND ASSOCIATES, INC.

767 EUSTIC STREET, SUITE 100
ST. PAUL, MN 55114
PHONE: 651-645-4197
WWW.KIMLEY-HORN.COM

NORTH ARROW AND SCALE

I HEREBY CERTIFY THAT THIS PLAN, SPECIFICATION, OR REPORT WAS PREPARED BY ME OR UNDER MY SUPERVISION AND THAT I AM A DULY LICENSED PROFESSIONAL LANDSCAPE ARCHITECT UNDER THE LAWS OF THE STATE OF MINNESOTA

SIGNATURE:

RYAN A. HYLLESTED

DATE: 01/5/2022 LIC. NO. 53828

COSTCO WHOLESALE

NWC OF HAZELTINE BLVD & OAKRIDGE DR
CHASKA, MN

DATE	ISSUED FOR	REV

LI 3.1

IRRIGATION DETAILS

AS INDICATED

11/8/2021 5:36:54 PM

IRRIGATION LEGEND

SYMBOL	MANUFACTURER/MODEL/DESCRIPTION	QTY
LST SST RST	Rain Bird R-VAN-STRIP 1804-SAM-P45 Shrub Rotary, 5'x15' (LCS and RCS), 5'x30' (SST) Hand Adjustable Multi-Stream Rotary w/ 1800 turf spray body on 4" pop-up, with check valve and 45 psi in-stream pressure regulator. 1/2" NPT Female Threaded Inlet.	5
14 ADJ 14 F	Rain Bird R-VAN14 1804-SAM-P45 Turf Rotary, 8'-14' 45-270 degrees and 360 degrees. Hand Adjustable Multi-Stream Rotary w/1800 turf spray body on 4" pop-up, with check valve and 45 psi in-stream pressure regulator. 1/2" NPT Female Threaded Inlet.	237
18 ADJ 18 F	Rain Bird R-VAN18 1804-SAM-P45 Turf Rotary, 13'-18' 45-270 degrees and 360 degrees. Hand Adjustable Multi-Stream Rotary w/1800 turf spray body on 4" pop-up, with check valve and 45 psi in-stream pressure regulator. 1/2" NPT Female Threaded Inlet.	46
24 ADJ 24 F	Rain Bird R-VAN24 1804-SAM-P45 Turf Rotary, 17'-24' 45-270 degrees and 360 degrees. Hand Adjustable Multi-Stream Rotary w/1800 turf spray body on 4" pop-up, with check valve and 45 psi in-stream pressure regulator. 1/2" NPT Female Threaded Inlet.	88

SYMBOL	MANUFACTURER/MODEL/DESCRIPTION	QTY
	Rain Bird XCZ-100-PRB-LC Wide Flow Drip Control Kit, for Light Commercial Uses. 1" PEB Valve, with 1" Pressure Regulating 40psi Basket Filter. 0.3-20 GPM.	4
	Rain Bird XCZ-150-LCS High Flow Control Zone Kit, for Large Commercial Drip Zones. 1-1/2" PEB Globe Valve with single 1-1/2" Pressure Regulating 40psi Quick-Check Basket Filter. Flow range: 15-62 GPM.	8
	Canopy Tree Ring	19
	Area to Receive Dripline Netafim TLCV-06-18 Techline Pressure Compensating Landscape Dripline with Check Valve. 0.6 GPH emitters at 18" O.C. Dripline laterals spaced at 18" apart, with emitters offset for triangular pattern. 17mm.	33,344 l.f.

SYMBOL	MANUFACTURER/MODEL/DESCRIPTION	QTY
	Rain Bird PEB-PRS-D 1", 1-1/2" Plastic Industrial Valves. Low Flow Operating Capability, Globe Configuration. With Pressure Regulator Module.	14
	Rain Bird 5-RC 1" Brass Quick-Coupling Valve, with Corrosion-Resistant Stainless Steel Spring, Thermoplastic Rubber Cover, and 1-Piece Body.	2
ICV	Isolation Valve	5
ICV	Rain Bird EFB-CP 2" 2" Brass Master Valve, that is Contamination Proof w/Self-Flushing Filter Screen.	1
BF	Febco 825Y 2" Reduced Pressure Backflow Preventer	1
C	Rain Bird ESPLXIVM 60 Station, 2-Wire Controller w/ Smart Valve Technology. (1) ESPLXIVM 60-Station, Indoor/Outdoor, Plastic Wall-Mount Cabinet. System Requirements: Rain Bird LXIVM-XXX Integrated Valve Modules & 2-Wire Devices. Use Paige Electric Cable P107ZD & Rain Bird WC20 Dry Splices ONLY. Ground System w/ (X) LXIVMSD Surge Device in Rain Bird Round Valve Boxes. Install Per Manufactures Recommendations.	1
D	Rain Bird FD-101TURF Field Decoder for Two-Wire system. Install in valve box for valve. Operates one valve/solenoid. Use line surge protection as per manufacturer's directions.	26
IQ	Rain Bird IQ-CM-LXD-LXIVM Connection Module provides IQNet High-Speed Data Cable Connections for ESP-LXD Controller. Installs in ESP-LXD zero Module Slot.	1
RS	Rain Bird WR2-RFC Wireless Rain and Freeze Sensor Combo, includes 1 receiver and 1 rain/freeze sensor transmitter.	1
FS	Rain Bird FS-200-P 2" Flow Sensor for use with Rain Bird Maxicom, SiteControl, and ESP-LXD Central Control Systems. Plastic (PVC) Model. Suggested Operating Range of 10.0 GPM to 200.0 GPM. Sensors should be sized for flow rather than pipe size.	1
M	Water Meter 2"	1
M2	Water Meter 2" APANA COSTCO METER	1
	Irrigation Lateral Line: PVC Class 160 SDR 26	11,626 l.f.
	Irrigation Mainline: PVC Class 200 SDR 21	4,996 l.f.
	Pipe Sleeve: PVC Schedule 40 21 Valve Callout 26 Valve Number Valve Flow Valve Size	1,541 l.f.

NOTES:

THIS IRRIGATION PLAN IS DESIGNED TO THE FOLLOWING STATS: 75 PSI AND 65 GPM. IF WATER PRESSURE DOES NOT MEET DESIGN SPECIFICATIONS A BOOSTER PUMP WILL BE REQUIRED AT COST OF CONTRACTOR. CONTACT LANDSCAPE ARCHITECT PRIOR TO INSTALLATION IF SYSTEM HAS +/- 5 PSI THAN DESIGN PRESSURE.

ABOVE QUANTITIES PROVIDED FOR CONVENIENCE ONLY. CONTRACTOR TO CONFIRM ALL QUANTITIES PRIOR TO BIDDING.

REFERENCE MAXIMUM LATERAL DRIPLINE CHART TO DETERMINE MINIMUM NUMBER OF POINTS OF CONNECTION PER DRIP LINE ZONE.

WHERE LAYOUT FLEXIBILITY EXISTS CENTER FEED LAYOUTS MUST BE USED. THIS ALLOWS FOR EVEN FLOW OF WATER THROUGH THE ZONE.

HUNTER ECO-INDICATOR TO BE PLACED IN ALL DRIP AREAS AT THE FURTHEST POINT OF EACH DRIP RUN.

ZONES LOWER THAN THE CAPACITY OF THE FLOW SENSOR ARE TO BE WIRED IN THE CONTROLLER WITH ANOTHER ZONE SO THAT THE FLOW SENSOR READS BOTH ZONES AS ONE ZONE IN ORDER TO MEET THE FLOW SENSOR'S LOWEST GPM REQUIREMENT. DRIP ZONES REQUIRED TO REMAIN PIPED AS SEPARATE ZONES.

SURGE PROTECTION AND DECODER NOTES

1. SURGE PROTECTION - THE MINIMUM RECOMMENDED LEVEL OF PROTECTION IS TO HAVE ONE DECODER GROUNDED AT THE END OF EACH WIRE PATH AND ONE DECODER GROUNDED EVERY 500 FT. FOR HIGHER LEVELS OF PROTECTION, GROUND THE DECODERS MORE FREQUENTLY. THERE IS NO LIMIT ON THE NUMBER OF GROUND CONNECTIONS IN A DECODER SYSTEM. IT IS IMPORTANT THAT BOTH THE CONTROLLER AND THE DECODERS ARE GROUNDED TO GROUND RODS OR PLATES WITH LESS THAN 10 OHMS RESISTANCE. THE GROUND SHOULD ALWAYS BE MEASURED WITH A GROUND RESISTANCE METER. A "CLAMP ON METER" CANNOT BE USED FOR GROUND MEASUREMENT, SINCE THIS IS AN ISOLATED SYSTEM. GROUND RESISTANCE MEASUREMENTS SHOULD BE PERFORMED WITH A "FALL OF POTENTIAL" TYPE METER IN DECODER SYSTEMS. THE GROUND SHOULD BE TESTED REGULARLY FOR RESISTANCE. SURGE PROTECTION INSIDE THE DECODER CAN WEAR OUT, AND A DECODER SHOULD BE REPLACED WHEN IT MIGHT HAVE BEEN DAMAGED BY A LIGHTNING STRIKE IN THE IMMEDIATE VICINITY. THE DECODER IS A COMPLEX ELECTRONIC PART AND IT IS NOT POSSIBLE TO FULLY TEST WHETHER IT IS WORKING. REPLACE THE DECODER IF THERE IS ANY VISIBLE DAMAGE TO THE DEVICE, OR IF NEARBY DECODERS OR CONTROLLERS HAVE BEEN DAMAGED.
2. IT IS THE RESPONSIBILITY OF THE CONTRACTOR TO GROUND ALL ELECTRICAL EQUIPMENT INSTALLED IN RELATION TO THE IRRIGATION CONTROL SYSTEM. USE GROUNDING ELECTRODES THAT ARE UL LISTED OR MANUFACTURED TO MEET THE MINIMUM REQUIREMENTS OF THE US NATIONAL ELECTRICAL CODE (NEC).
3. THE IRRIGATION SYSTEM SHALL USE A SINGLE TWO-WIRE CABLE FOR ACTIVATION OF ALL VALVES AND SENSORS. CONNECTIONS BELOW GRADE AND IN VALVE BOXES SHALL BE WATERPROOF. THE IRRIGATION CABLE SHALL BE DIRECT BURIAL.
4. MAINLINE TO BE GROUNDED PER MANUFACTURER RECOMMENDATIONS. CONTACT JEFF FEUERBACHER WITH RAIN BIRD AT 214.535.8358.

THE IRRIGATION SYSTEM SHALL USE A SINGLE TWO-WIRE CABLE FOR ACTIVATION OF ALL VALVES AND SENSORS. CONNECTIONS BELOW GRADE AND IN VALVE BOXES SHALL BE WATERPROOF. THE IRRIGATION CABLE SHALL BE DIRECT BURIAL.

GENERAL IRRIGATION NOTES

1. IRRIGATION SYSTEM IS DIAGRAMMATIC, CONTRACTOR TO VERIFY AND DESIGN PER ACTUAL PRESSURE, PER LOCAL CODES, AND PER SITE REQUIREMENTS. FIELD VERIFY LOCATION OF COMPONENTS WITH ACTUAL CONDITIONS PRIOR TO INSTALLATION, ADJUST AS NEEDED FOR COMPLETE COVERAGE. SYSTEM TO INCLUDE ALL PLUMBING AND ELECTRICAL, INCLUDING CONDUIT, SLEEVING, AND WEATHER-PROOF ENCLOSURES. SYSTEM SHALL BE COMPLETE. CONTRACTOR TO PROVIDE SHOP DRAWINGS, DESIGN PRESSURE CALCULATIONS, AND RELATED PRODUCT SHEETS FOR OWNER OR LANDSCAPE ARCHITECT APPROVAL. CONTRACTOR TO PROVIDE "AS-BUILT" DRAWINGS OF IRRIGATION SYSTEM AT THE COMPLETION OF THE PROJECT. SYSTEM SHALL HAVE A ONE-YEAR WARRANTY ON PARTS AND LABOR. THE IRRIGATION SYSTEM SHALL BE INSTALLED AS PER MANUFACTURER'S SPECIFICATIONS. SEE SITE IRRIGATION SPECIFICATION SECTION FOR ADDITIONAL REQUIREMENTS. IF APPLICABLE, ZONE PARAMETERS: TURF AREAS SHALL HAVE SPRAYS/ROTORS, SHRUB/PERENNIAL AREAS SHALL HAVE DRIP, AND TREES SHALL HAVE BUBBLERS.
2. IRRIGATION CONTRACTOR SHALL TEST EXISTING STATIC PRESSURE ON SITE PRIOR TO CONSTRUCTION. SHOULD EXISTING SITE PRESSURE BE BELOW 65 PSI, CONTRACTOR SHALL CONTACT THE IRRIGATION DESIGNER PRIOR TO COMMENCEMENT OF CONSTRUCTION.
3. COORDINATE IRRIGATION INSTALLATION WITH PLANTING PLAN AND SITE CONDITIONS TO PROVIDE COMPLETE 100% COVERAGE WITH MINIMUM OVERSPRAY. THE IRRIGATION CONTRACTOR SHALL MAKE MINOR ADJUSTMENTS TO ENSURE PROPER COVERAGE AT NO ADDITIONAL COST TO THE OWNER.
4. ALL WIRING, BACKFLOW PREVENTOR, AND PLUMBING AS PER LOCAL CODE. WATER CONNECTION BY MECHANICAL AND UTILITY CONTRACTOR. VERIFY POWER CONNECTION WITH ELECTRICAL.
5. ALL CONSTRUCTION SHALL CONFORM TO CITY, COUNTY, STATE, AND FEDERAL REQUIREMENTS. IT SHALL BE THE RESPONSIBILITY OF THE IRRIGATION CONTRACTOR TO ENSURE THAT ALL IRRIGATION EQUIPMENT MEETS GOVERNMENT REGULATIONS. CONTRACTOR SHALL ALSO BE RESPONSIBLE FOR OBTAINING ANY NECESSARY PERMITS OR APPROVALS PRIOR TO COMMENCEMENT OF OPERATIONS ON-SITE. COPIES OF THE PERMITS SHALL BE SENT TO THE OWNER/GENERAL CONTRACTOR.
6. LATERAL PIPE SHALL BE INSTALLED AT A MINIMUM DEPTH OF 12 INCHES. MAINLINE PIPE AND WIRES SHALL BE INSTALLED AT A MINIMUM DEPTH OF 18 INCHES.
7. ELECTRICAL POWER SHALL BE PROVIDED WITHIN 5 FEET OF CONTROLLER LOCATION BY GENERAL CONTRACTOR. LICENSED IRRIGATION CONTRACTOR TO PROVIDE FINAL HARD WIRE TO CONTROLLER.
8. 24 VOLT VALVE WIRE SHALL BE A MINIMUM OF 14 GAUGE. U.L. APPROVED FOR DIRECT BURIAL, SINGLE CONDUCTOR "IRRIGATION WIRE". CONTRACTOR TO CONFIRM WIRE SIZE PRIOR TO INSTALLATION. WIRE SPLICES SHALL BE ENCASED IN A WATERPROOF WIRE CONNECTOR UL APPROVED AND FILLED WITH SILICONE.
9. ALL VALVES, FLOW SENSORS, AND QUICK COUPLERS SHALL BE LOCATED IN VALVE BOXES (SIZED FOR NORMAL MAINTENANCE, FLUSH WITH FINAL GRADE) OR ZONES. PROVIDE DRIP KIT OF VALVE, PRESSURE REDUCER, AND FILTER WITHIN ONE VALVE BOX. DRIP ZONE AIR RELIEF VALVE AND FLUSH VALVE TO BE IN SEPARATE VALVE BOXES.
10. USE PVC SWING JOINT ASSEMBLIES TO CONNECT ALL SPRAY AND ROTOR HEADS.
11. CONTRACTOR IS TO CONTACT APPROPRIATE AUTHORITIES AND LOCATE ALL UTILITIES PRIOR TO CONSTRUCTION. CONTRACTOR SHALL VERIFY ALL DIMENSIONS, ELEVATIONS, EQUIPMENT QUANTITIES, AND UTILITY LOCATIONS PRIOR TO BEGINNING WORK.
12. MINIMUM 4" PVC SCHEDULE 40 SLEEVING SHALL BE REQUIRED UNDER ALL WALKS AND PAVEMENTS FOR IRRIGATION PIPE AND WIRES. PROVIDE 12" LENGTH OF SLEEVE AT EACH TEMPORARILY SEALED END, STAND PIPE, OR OTHER APPROVED METHODS FOR FUTURE LOCATING. EXTEND SLEEVING AT LEAST 1 FOOT BEYOND EDGE OF PAVEMENT. PROVIDE PVC STAND PIPE FOR LOCATING ENDS OF SLEEVING. PROVIDE MINIMUM TWO SIZES LARGER THAN PIPE SIZE. PROVIDE ADDITIONAL SLEEVING FOR WIRING, AS NEEDED. SLEEVE DEPTH IS PRIMARILY 18 INCHES, OR AS REQUIRED. COORDINATE AND PLACE SLEEVING PRIOR TO PAVEMENT INSTALLATION. DIRECTIONAL BORE UNDER PAVEMENT IN EXISTING CONDITIONS TO REMAIN.
13. DRIP LINE SHALL BE PLACED A MINIMUM OF 2" UNDER MULCH. DRIP IRRIGATION TO FOLLOW MANUFACTURERS RECOMMENDATION FOR TYPE, SIZE, AND LOCATION PER LANDSCAPE CONDITION. EACH DRIP ZONE SHALL HAVE ZONE VALVE, PRESSURE REDUCER, AND FILTER, AIR RELIEF VALVE, FLUSH VALVE, SUPPLY LATERAL LINES, DRIP TUBING WITH EMBEDDED EMITTERS, AND OTHER RELATED ITEMS. DRIP TUBING SHALL BE ANCHORED AND UNDER LANDSCAPE MULCH, HIDDEN FROM VIEW, WITH EMITTERS LOCATED AT PLANT LOCATION. DRIP TUBING SHALL ALSO BE LOOPED AND INTERCONNECTED, WITH NO DEAD-ENDS. ANY ADDITIONAL EMITTERS, AS NOTED ON PLAN.
14. LICENSED IRRIGATION CONTRACTOR SHALL ADJUST SPRAY NOZZLES FOR "HEAD-TO-HEAD" COVERAGE AND ADJUST FOR MINIMUM OVERSPRAY ONTO PAVEMENT. NO OVER-SPRAY IS PERMITTED ONTO STREETS OR SIDEWALKS.
15. IRRIGATION CONTRACTOR SHALL SUPPLY AND CONSTRUCT IRRIGATION SYSTEM WITH ALL MATERIALS AND PER MANUFACTURER SPECIFICATIONS SHOWN ON THIS PLAN. IF CONTRACTOR PREFERS MATERIALS THAT DIFFER FROM THE PLAN, THEY SHALL BE APPROVED BY THE IRRIGATION DESIGNER PRIOR TO CONSTRUCTION. INSTALL WEATHER/RAIN SENSOR(S) ON EXTERIOR WEATHER EXPOSED VERTICAL SURFACE(S). COORDINATE WITH OWNER'S AUTHORIZED REPRESENTATIVE AS TO FINAL LOCATION.
16. VERIFY CONTROLLER AND RAIN SENSOR LOCATION AND MAINLINE POINT OF CONNECTION AT PROJECT SITE WITH OWNER.
17. EXISTING TREES TO REMAIN ARE TO BE PROTECTED FROM DAMAGE. DO NOT TRENCH OR EXCAVATE WITHIN THE CRITICAL ROOT ZONE OF ANY TREE.
18. IRRIGATION LATERAL LINES, MAIN LINES AND EQUIPMENT MAY BE SHOWN OUTSIDE PROPERTY LINES ON THIS PLAN. ALL IRRIGATION LINES AND EQUIPMENT ARE TO BE WITHIN AND INSTALLED WITHIN THE LIMITS OF THE PROPERTY LINE.
19. SUPPLY LINE AND METER TO BE PROVIDED BY GENERAL CONTRACTOR. BACKFLOW PREVENTER TO BE PROVIDED BY IRRIGATION CONTRACTOR. IRRIGATION CONTRACTOR'S POINT OF CONNECTION TO BEGIN AFTER THE IRRIGATION WATER METER.
20. FIRST YEAR WINTERIZATION AND SPRING START UP OF SYSTEM SHALL BE PERFORMED BY IRRIGATION CONTRACTOR, UNLESS INDICATED OTHERWISE. IRRIGATION CONTRACTOR SHALL REVIEW WINTERIZATION PROCEDURES FOR IRRIGATION SYSTEM WITH OWNERS REPRESENTATIVE.
21. ALL PLANT MATERIAL IN TREE HOLDING AREAS SHALL BE MANUALLY WATERED/IRRIGATED TO KEEP MOIST UNTIL PLANTED.
22. MAINLINE, VALVES, AND WIRING ARE SHOWN ON DRAWINGS FOR CLARITY, SHOULD BE LOCATED IN ACCESSIBLE GREEN SPACE. CONTRACTOR TO COORDINATE WITH ALL DISCIPLINES TO AVOID CONFLICTS WITH UTILITIES/ STRUCTURES, ETC.
23. INSTALLATION OF WORK SHALL BE COORDINATED WITH OTHER CONTRACTORS IN SUCH A MANNER AS TO ALLOW FOR A SPEEDY AND ORDERLY COMPLETION OF ALL WORK ON THE SITE.
24. SET SPRAY HEADS 4" FROM BACK OF CURB OR 24" IF PAVEMENT HAS NO CURB.
25. CONTRACTOR SHALL PROVIDE "AS-BUILT" DRAWINGS OF THE FINAL INSTALLATION TO OWNER AT SUBSTANTIAL COMPLETION BEFORE RECEIVING FINAL PAYMENT. "AS-BUILT" DRAWINGS TO BE COLOR CODED BY ZONE ON 8.5" X 11", LAMINATED, AND PLACED IN CONTROLLER.
26. ALL DRIP ZONES SHALL BE INSTALLED WITH A SELF-FLUSHING DISC FILTER, OR APPROVED EQUAL.
27. INSTALL ALL IRRIGATION COMPONENTS AS PER MANUFACTURERS REQUIREMENTS.
28. IRRIGATION HEADS AND COMPONENTS SHALL BE LOCATED A MINIMUM OF 24" FROM ALL BUILDINGS TO AVOID ADVERSE PERFORMANCE OF FOUNDATIONS AND SLABS.
29. NO LATERALS LESS THAN 3/4" DIAMETER.
30. ALL PIPE 1.5" OR GREATER SHALL BE SDR 26 CLASS 200 FOR MAINLINE AND CLASS 160 FOR LATERAL LINE PVC PIPE (DO NOT EXCEED 35 GPM FOR 1.5" AND 58 GPM FOR 2"). ALL PIPE 1.25" OR 1" SHALL BE 100 POLY PIPE OR CLASS 160 PVC PIPE, AS INDICATED) DO NOT EXCEED 13 GPM FOR 1" AND 22 GPM FOR 1.25"). PIPE SIZE TO BE IDENTIFIED BY CONTRACTOR PER ZONE REQUIREMENTS.
31. BIDDING CONTRACTORS SHOULD BECOME THOROUGHLY FAMILIAR WITH ALL FACETS OF THE PROPOSED IRRIGATION SYSTEM. FAILURE TO CLARIFY MISUNDERSTANDINGS, OR INTENT OF THESE DRAWINGS AND SPECIFICATIONS BEFORE SUBMITTAL OF BID SHALL BE THE RESPONSIBILITY OF THE CONTRACTOR.
32. SOME AREAS MAY REQUIRE RISER EXTENSIONS FOR SPRINKLER OR A FIXED RISER WITH A SHRUB HEAD OR SHRUB ADAPTER TO OBTAIN PROPER COVERAGE. ROTOR NOZZLES TO PROVIDE PROPER COVERAGE AND MATCH PRECIPITATION, AS REQUIRED. FIELD ADJUST AS NEEDED. SPRAY HEADS IN TURF AREAS TO BE 4" POP-UPS AND IN LANDSCAPE BEDS TO BE 12" POP-UPS. INSTALL ROTOR AND SPRAY HEADS TO LATERAL LINE WITH FLEX TUBING OR SWING JOINTS. BUBBLERS TO BE ON 4" POP-UPS.
33. COORDINATE INSTALLATION OF IRRIGATION SYSTEM WITH OTHER IMPROVEMENTS.
34. CONTRACTOR TO SCHEDULE AND PROGRAM CONTROLLER AND VALVES FOR APPROPRIATE LANDSCAPE WATER REQUIREMENTS. VERIFY WITH OWNER AS TO TIME AND SPECIFIC REQUIREMENTS.

GENERAL IRRIGATION SPECIFICATIONS AND NOTES

A. EXTENT:

INCLUDES FURNISHING ALL LABOR, MATERIALS AND EQUIPMENT FOR THE PROPER INSTALLATION OF THE IRRIGATION SYSTEM. THE WORK INCLUDES, BUT IS NOT LIMITED TO THE FOLLOWING: (1) TRENCHING AND BACKFILL, (2) AUTOMATICALLY CONTROLLED LOW VOLUME IRRIGATION SYSTEM, (3) TEST ALL SYSTEMS AND MAKE OPERATIVE, (4) "AS-BUILT" DRAWINGS.

B. GENERAL:

1. PERMITS AND FEES: OBTAIN ALL PERMITS AND PAY REQUIRED FEES TO ANY GOVERNMENTAL AGENCY HAVING JURISDICTION OVER THE WORK. INSPECTIONS REQUIRED BY LOCAL ORDINANCES DURING THE COURSE OF CONSTRUCTION SHALL BE ARRANGED AS REQUIRED. ON COMPLETION OF THE WORK, SATISFACTORY EVIDENCE SHALL BE FURNISHED TO THE OWNER'S CONSTRUCTION REPRESENTATIVE TO SHOW THAT ALL WORK HAS BEEN INSTALLED IN ACCORDANCE WITH THE STATE AND LOCAL BUILDING/ PLUMBING CODE AND ALL OTHER CODE REQUIREMENTS.
2. APPROVAL: WHEREVER THE TERMS "APPROVE" OR "APPROVED" ARE USED IN THE SPECIFICATIONS, THEY SHALL MEAN THE APPROVAL OF THE OWNER'S CONSTRUCTION REPRESENTATIVE IN WRITING.
3. BEFORE ANY WORK IS STARTED, A CONFERENCE SHALL BE HELD BETWEEN THE CONTRACTOR AND THE OWNER'S CONSTRUCTION REPRESENTATIVE CONCERNING THE WORK UNDER THIS CONTRACT.
4. COORDINATION: COORDINATE AND COOPERATE WITH OTHER CONTRACTORS TO ENABLE THE WORK TO PROCEED AS RAPIDLY AND EFFICIENTLY AS POSSIBLE
5. INSPECTION OF SITE:
   A. CONTRACTOR SHALL ACQUAINT THEMSELVES WITH ALL SITE CONDITIONS. SUBMISSION OF THEIR PROPOSAL SHALL BE CONSIDERED EVIDENCE THAT THE EXAMINATION HAS BEEN CONDUCTED. SHOULD UTILITIES NOT SHOWN ON THE PLANS BE FOUND DURING EXCAVATIONS, CONTRACTOR SHALL PROMPTLY NOTIFY THE OWNER'S CONSTRUCTION REPRESENTATIVE FOR INSTRUCTIONS AS TO FURTHER ACTION. FAILURE TO DO SO WILL MAKE CONTRACTOR LIABLE FOR ANY AND ALL DAMAGE THERETO ARISING FROM HIS OPERATIONS SUBSEQUENT TO DISCOVERY OF SUCH UTILITIES NOT SHOWN IN PLANS.
   B. CONTRACTOR SHALL MAKE NECESSARY ADJUSTMENTS IN THE LAYOUT AS MAY BE REQUIRED TO CONNECT TO EXISTING STUBOUTS, SHOULD SUCH STUBS NOT BE LOCATED EXACTLY AS SHOWN, AND AS MAY BE REQUIRED TO WORK AROUND EXISTING WORK AT NO INCREASE IN COST TO THE OWNER'S CONSTRUCTION REPRESENTATIVE.
6. PROTECTION OF EXISTING PLANTS AND SITE CONDITIONS: THE CONTRACTOR SHALL TAKE NECESSARY PRECAUTIONS TO PROTECT SITE CONDITIONS TO REMAIN. SHOULD DAMAGE BE INCURRED, THE CONTRACTOR SHALL REPAIR THE DAMAGE TO ITS ORIGINAL CONDITION AT THE CONTRACTOR'S EXPENSE.
7. THE OWNER RESERVES THE RIGHT TO SUBSTITUTE, ADD, OR DELETE ANY MATERIAL OR WORK AS THE WORK PROGRESSES. ADJUSTMENTS TO THE CONTRACT PRICE SHALL BE NEGOTIATED IF DEEMED NECESSARY BY THE OWNER ON A PER DIEM BASIS.
8. THE OWNER RESERVES THE RIGHT TO REJECT MATERIAL OR WORK WHICH DOES NOT CONFORM TO THE CONTRACT DOCUMENTS. REJECTED WORK SHALL BE REMOVED OR CORRECTED AT THE EARLIEST TIME POSSIBLE.
9. WORK SCHEDULE: WITHIN 10 DAYS AFTER AWARD OF THE CONTRACT, THE CONTRACTOR SHALL SUBMIT TO THE OWNER A WORK SCHEDULE
10. "AS-BUILT" IRRIGATION DRAWINGS: PREPARE AN "AS-BUILT" DRAWING ON A FULL-SIZE PLAN SET WHICH SHALL SHOW DEVIATIONS FROM THE BID DOCUMENTS MADE DURING CONSTRUCTION AFFECTING THE MAIN LINE PIPE, CONTROLLER LOCATIONS, REMOTE CONTROL VALVES AND QUICK COUPLING VALVE LOCATIONS. THEY SHALL ALSO INDICATE AND SHOW APPROVED SUBSTITUTIONS OF SIZE, MATERIAL AND MANUFACTURERS NAME AND CATALOG NAME AND CATALOG NUMBER. THE DRAWINGS SHALL BE DELIVERED TO THE TENANT'S CONSTRUCTION REPRESENTATIVE BEFORE FINAL ACCEPTANCE OF WORK.
11. FINAL ACCEPTANCE: FINAL ACCEPTANCE OF THE WORK MAY BE OBTAINED FROM THE OWNER'S CONSTRUCTION REPRESENTATIVE UPON THE SATISFACTORY COMPLETION OF ALL WORK.
12. GUARANTEE: ALL WORK SHALL BE GUARANTEED FOR ONE (1) YEAR FROM DATE OF ACCEPTANCE AGAINST ALL DEFECTS IN MATERIAL, EQUIPMENT AND WORKMANSHIP. GUARANTEE SHALL ALSO COVER REPAIR OF DAMAGE TO ANY PART OF THE PREMISES RESULTING FROM LEAKS OR OTHER DEFECTS IN MATERIAL, EQUIPMENT AND WORKMANSHIP TO THE SATISFACTION OF THE TENANT'S CONSTRUCTION REPRESENTATIVE. REPAIRS, IF REQUIRED, SHALL BE DONE PROMPTLY AT NO COST TO THE OWNER.
13. A LAMINATED PLAN (8 1/2 X 11) SHOWING THE DIFFERENT IRRIGATION ZONES IN COLOR, PREPARED BY THE IRRIGATION CONTRACTOR, SHALL BE POSTED IN THE MECHANICAL ROOM OR WITHIN CONTROLLER CABINET.

C. MATERIALS:

1. GENERAL: ALL MATERIALS THROUGHOUT THE SYSTEM SHALL BE NEW AND IN PERFECT CONDITION.
2. PLASTIC PIPING: ALL MAIN LINES AND LATERAL LINES SHALL BE CLASS 200 POLYVINYL CHLORIDE (PVC) PIPE AND SHALL COMPLY WITH ONE OF THE FOLLOWING STANDARDS: ASTM D-1785, ASTM D-2241, AWWA-C-900, OR AWWA C-905. SDR-PR PIPE SHALL HAVE A MINIMUM WALL THICKNESS AS REQUIRED BY SDR-26. PVC GASKETS FITTINGS SHALL CONFORMING TO ASTM D 3139. GASKETS SHALL CONFORM TO ASTM F 477. SOLVENT-WELD PVC FITTINGS SHALL MEET THE REQUIREMENTS OF SCHEDULE 40 AS SET FORTH IN ASTM D 2466. THREADED PVC PIPE FITTINGS SHALL MEET THE REQUIREMENTS OF SCHEDULE 40 AS SET FORTH IN ASTM D 2464. CONFORMING TO ASTM D-1784 AND D-2241
3. PLASTIC FITTINGS: ALL SOLVENT-WELD PVC FITTINGS SHALL MEET THE REQUIREMENTS OF SCHEDULE 40 AS SET FORTH IN ASTM D 2466. SCHEDULE 40 SOLVENT-WELD, POLYVINYL CHLORIDE (PVC) STANDARD WEIGHT AS MANUFACTURED BY SLOANE, LASCO, OR APPROVED EQUAL.
4. SOLVENT CEMENT: PVC CEMENT SHALL MEET ASTM D 2564 AND PVC CLEANER-TYPE SHALL MEET ASTM F 656.
5. SPRINKLER HEAD RISERS: SCHEDULE 40 PVC FOR RISERS. PIPE SHALL BE CUT WITH A STANDARD PIPE CUTTING TOOL WITH SHARP CUTTERS. REAM ONLY TO FULL DIAMETER OF PIPE AND CLEAN ALL ROUGH EDGES OR BURRS. CUT ALL THREADS ACCURATELY WITH SHARP DIES. NOT MORE THAN THREE(3) FULL THREADS SHALL SHOW BEYOND FITTINGS WHEN PIPE IS MADE UP. ASSEMBLIES SHALL BE AS DETAILED.
6. AUTOMATIC CONTROLLER: SEE LEGEND
7. REMOTE CONTROL VALVES: SEE LEGEND
8. CONTROL WIRING: CONVENTIONAL SYSTEMS TO USE 24 VOLT SOLID UL APPROVED FOR DIRECT BURIAL IN GROUND. MINIMUM WIRE SIZE: 14 GAUGE. ALL SPLICES SHALL BE MADE WITHIN VALVE BOX. TWO-WIRE SYSTEMS TO UTILIZE CONTROL WIRING PER MANUFACTURER STANDARDS.
9. SLEEVES FOR CONTROL WIRING: UNDER ALL WALKS AND PAVED AREAS AND WHERE INDICATED ON DRAWINGS. MINIMUM PVC SCHEDULE 40 PLASTIC PIPE.
10. SPRINKLER HEADS/ DRIP LINE: SEE LEGEND
11. QUICK COUPLING VALVES: SHALL BE NOTED ON DRAWINGS.

D. WORKMANSHIP:

1. LAY OUT WORK AS ACCURATELY AS POSSIBLE TO THE DRAWINGS. THE DRAWINGS, THOUGH CAREFULLY DRAWN, ARE GENERALLY DIAGRAMMATIC TO THE EXTENT THAT SWING JOINTS, OFFSETS, AND ALL FITTINGS ARE NOT SHOWN.
2. THE CONTRACTOR SHALL BE RESPONSIBLE FOR FULL AND COMPLETE COVERAGE OF ALL IRRIGATED AREAS AND SHALL MAKE ANY NECESSARY MINOR ADJUSTMENTS AT NO ADDITIONAL COST TO THE OWNER'S CONSTRUCTION REPRESENTATIVE.
3. ANY MAJOR REVISIONS TO THE IRRIGATION SYSTEM MUST BE SUBMITTED AND ANSWERED IN WRITTEN FORM, ALONG WITH ANY CHANGE IN CONTRACT PRICE.

E. INSTALLATION:

1. EXCAVATION AND TRENCHING:
   A. PERFORM ALL EXCAVATIONS AS REQUIRED FOR THE INSTALLATION OF THE WORK INCLUDING UNDER THIS SECTION, INCLUDING SHORING OF EARTH BANKS TO PREVENT CAVE-INS. RESTORE ALL SURFACES, EXISTING UNDERGROUND INSTALLATIONS, ETC., DAMAGED OR CUT AS A RESULT OF THE EXCAVATIONS TO AND IN A MANNER APPROVED BY THE OWNER.
   B. TRENCHES SHALL BE MADE WIDE ENOUGH TO ALLOW A MINIMUM OF 6 INCHES BETWEEN PARALLEL PIPE LINES. TRENCHES FOR PIPE LINES SHALL BE MADE OF SUFFICIENT DEPTHS TO PROVIDE THE MINIMUM COVER FROM FINISH GRADE AS FOLLOWS:
      1) 24" MINIMUM BELOW BOTTOM PAVEMENT PER SLEEVING INSTALLATION DETAIL FOR MAIN LINE; 18" MINIMUM FOR NON-PRESSURIZED LATERALS.
      2) MINIMUM COVER OVER IRRIGATION LINES TO HEADS/ DRIPLINE EXCEPT VEHICLE TRAFFIC AREAS ARE AS FOLLOWS:
         12" COVER OVER LATERALS
         18" COVER OVER MAINLINE
   C. MAINTAIN ALL WARNING SIGNS, SHORING, BARRICADES, FLARES AND RED LANTERNS AS REQUIRED BY THE SAFETY ORDERS OF THE DIVISION OF INDUSTRIAL SAFETY AND LOCAL ORDINANCES.
2. PIPE LINE ASSEMBLY:
   A. INSTALL REMOTE CONTROL VALVES WHERE SHOWN AND GROUP TOGETHER WHERE PRACTICAL. PLACE NO CLOSER THAN 12-18 INCHES TO WALK EDGES, WALLS, AND OTHER PAVEMENTS. PLACE A MINIMUM OF 24" FROM BUILDINGS.
   B. PLASTIC PIPE AND FITTINGS SHALL BE SOLVENT WELDED USING SOLVENTS AND METHODS RECOMMENDED BY MANUFACTURER OF THE PIPE. EXCEPT WHERE SCREWED CONNECTIONS ARE REQUIRED. PIPE AND FITTINGS SHALL BE THOROUGHLY CLEANED OF DIRT, DUST AND MOISTURE BEFORE APPLYING SOLVENT WITH A NON-SYNTHETIC BRISTLE BRUSH.
   C. PIPE MAY BE ASSEMBLED AND WELDED ON THE SURFACE. SNAKE PIPE FROM SIDE TO SIDE OF TRENCH BOTTOM TO ALLOW FOR EXPANSION AND CONTRACTION.
   D. MAKE ALL CONNECTIONS BETWEEN PLASTIC PIPE AND METAL VALVES OR STEEL PIPE WITH THREADED FITTINGS USING PLASTIC MALE ADAPTERS.
   E. JOINTS:
      1. PIPE SIZES 2 1/2 INCH OR SMALLER SHALL HAVE BELL AND SOCKET JOINTS.
      2. PIPE SIZES LARGER THAN 2 1/2 INCH SHALL HAVE SNAP CONNECTIONS WITH RUBBER GASKET JOINTS.
      3. THRUST BLOCKING SHALL BE REQUIRED WHEN PIPE SIZE IS 4" OR GREATER.
3.


LEGEND
PROPOSED STORM SEWER
PROPOSED SANITARY SEWER
PROPOSED WATERMAIN
PIPE INSULATION
PROPOSED CATCH BASIN
PROPOSED SANITARY/STORM MANHOLE
PROPOSED GATE VALVE
PROPOSED HYDRANT
PROPOSED RIP RAP
POST INDICATOR VALVE
WALL MOUNTED POST INDICATOR VALVE
EXISTING STORM SEWER
EXISTING SANITARY SEWER
EXISTING WATERMAIN
EXISTING SANITARY MANHOLE
EXISTING STORM MANHOLE/CATCH BASIN
EXISTING HYDRANT
PROPOSED GAS
PROPOSED TELECOMM
PROPOSED ELECTRIC SERVICE
0 25' 50' 100'
SCALE IN FEET
MCKNIGHT LAKE
MCKNIGHT LAKE OHWL=894 (PER MnDNR LAKEFINDER)
POND
MATCH LINE VIEW 2
MATCH LINE VIEW 1
CHICAGO, MILWAUKEE, ST. PAUL & PACIFIC RAILROAD
DRAINTILE CLEANOUT TYP. OF 2 TOP=924.50 INV=920.00
DRAINTILE TO HAVE MIN. 0.50% SLOPE, TYP.
900 LF (TOTAL) 6" PERFORATED HDPE W/ CLEANOUTS
10-YR HWL=928.68 (EOF MEDIA ELEV=923.00)
LINED FOREBAY W/ RIPRAP PERIMETER TO LEVEL SPREAD FLOWS BASE=921.50 RIPRAP=923.00 (MATCH SAND ELEV.)
CONNECT DRAINTILE TO OCS 2 (SEE DETAIL ON SHEET C-7.4) INV=918.50 LAST 20' OF DRAINTILE INTO OCS 2 SHALL BE SOLID (NON PERFORATED) SCH. 40 PVC
450 SF TURF REINFORCEMENT MAT EXTENDED TO TOE OF BASIN SIDE SLOPE EOF ELEV=929.20
OCS 2 (SEE DETAIL) GRATE=929.00 8" ORIFICE=924.50 INV OUT=918.50
FES 2 W/ 4 CY RIPRAP INV=918.38
FES 600 W/ 12 CY RIPRAP INV=925.07
FES 200 INV=905.50
FES 201 INV=906.50
24.0" of 12" RCP @ 4.17%
46.9' of 12" HDPE @ 0.25%
43.3' of 21" HDPE @ 3.30%
CBMH 600A (DROP) RIM=958.00 INV(N)=955.50 INV(E)=952.14 INV OUT=926.50
INVS0-1 12" INLINE DRAIN W/ 12" DOME GRATE RIM=958.00 INV OUT=955.60
24.1' of 27" HDPE @ 0.62%
CBMH 601 RIM=957.40 INV(SE)=952.29 INV OUT=952.29 SUMP=949.29
SAN MH-2B RIM=958.40 INV(SE)=945.10 INV OUT=945.00
128.9' of 27" HDPE @ 0.55%
6" SAN SERVICE INV=945.50
6" SAN SERVICE INV=947.00
6" C900 WATERMAIN
CBMH 602 RIM=958.25 INV(E)=953.00 INV OUT=953.00
FFE: 959.80 GFE: 959.47
6G FFE: 959.47
56.8' of 27" HDPE @ 0.50%
66.3' of 27" HDPE @ 0.53%
CBMH 603 RIM=958.60 INV(SE)=953.35 INV OUT=953.35
CBMH 603A RIM=963.33 INV(SE)=953.64 INV OUT=953.64
HYDRANT W/ 6" G.V. & 6"X6" TEE
8"X6" REDUCER
SAN MH-2A RIM=961.00 INV(SE)=945.67 INV(NW)=944.30 INV(NE)=946.00 INV OUT=944.25
SAN MH-1 (EXT. DROP) RIM=927.00 INV(NE)=916.65 INV OUT=897.50
CORE DRILL AND CONNECT TO EXISTING SANITARY MANHOLE INV=896.53 INV OUT(EX)=895.51 (VERIFY)
FFE: 964.80 GFE: 964.47
144.4' of 27" HDPE @ 0.44%
8"X6" TEE W/ 6" G.V.
CBMH 604 RIM=963.80 INV(SE)=954.29 INV OUT=954.29
6G FFE: 963.80
97.6' of 27" HDPE @ 0.44%
8" C900 PVC WATERMAIN
8" G.V.
SAN MH-3 RIM=962.00 INV(E)=949.04 INV OUT=948.94
6"X8" SAN WYE INV(AT MAIN)=949.93 6" SAN SERVICE INV(AT BLDG)=951.00
CBMH 605 RIM=962.30 INV(E)=954.72 INV OUT=954.72
108.0' of 24" HDPE @ 0.75%
CBMH 606 RIM=963.10 INV(E)=955.53 INV OUT=955.53
118.3' of 24" HDPE @ 0.60%
CBMH 607 RIM=963.10 INV(N)=956.24 INV(NE)=957.62 INV OUT=956.24
209.1' of 12" HDPE @ 0.85%
SAN MH-4 RIM=964.80 INV(NW)=950.69 INV(NE)=950.69 INV OUT=950.59
8" TEE W/ 6" G.V.
CBMH 616 RIM=963.65 INV(NE)=959.40 INV OUT=959.40
118.8' of 12" HDPE @ 0.44%
CBMH 617 RIM=963.50 INV(NE)=959.92 INV OUT=959.92
CB 617A RIM=963.65 INV OUT=960.00
160 SF TURF REINFORCEMENT MAT EOF ELEV=965.00
700 SF TURF REINFORCEMENT MAT EOF ELEV=964.00
REPAIR EXISTING EROSION, FILL WITH SOIL, PROVIDE SEED AND EROSION CONTROL BLANKET. COORDINATE WITH CITY.
200 SF TURF REINFORCEMENT MAT W/ 8 CY RIPRAP ON DOWNSTREAM END
450 SF TURF REINFORCEMENT MAT W/ 10 CY RIPRAP ON DOWNSTREAM END
CBMH 613 RIM=965.40 INV(N)=961.11 INV OUT=961.11
6"X8" SAN WYE INV=953.45
6" SAN SERVICE INV=955.00
8" C900 PVC WATERMAIN
8"X6" TEE W/ 6" G.V.
261.0' of 15" HDPE @ 0.60%
CB 613A RIM=965.70 INV OUT=961.66 125.6' of 12" HDPE @ 0.44%
SAN MH-7 RIM=967.00 INV(E)=954.23 INV OUT=954.13
CB 503A RIM=966.00 INV OUT=962.00
6"X8" SAN WYE INV=954.70
6" SAN SERVICE INV=955.50
FFE: 968.50 GFE: 968.16
8"X6" TEE W/ 6" G.V.
119.3' of 12" HDPE @ 0.44%
B20E BLDG 6
FFE: 967.50 GFE: 967.17
HYDRANT W/ 6" G.V. & 6"X8" TEE
CBMH 503 RIM=966.25 INV(S)=959.85 INV(W)=961.48 INV OUT=959.85
30.5' of 12" HDPE @ 0.70%
FFE: 967.50
101.8' of 12" HDPE @ 0.44%
SAN MH-6 RIM=965.50 INV(N)=952.79 INV OUT=952.69
6G FFE: 966.00
CBMH 612 RIM=963.10 INV(N)=959.54 INV OUT=959.54
CBMH 611 RIM=965.00 INV(NW)=958.46 INV(NE)=959.08 INV OUT=958.46
98.1' of 15" HDPE @ 1.10%
8"X6" TEE W/ 6" G.V.
CB 614 RIM=965.10 INV OUT=959.15
6"X8" SAN WYE INV(AT MAIN)=952.29 6" SAN SERVICE INV(AT BLDG)=955.00
10.7' of 12" HDPE @ 0.70%
6" SAN SERVICE INV=947.00
6"X8" SAN WYE INV(AT MAIN)=952.09 6" SAN SERVICE INV(AT BLDG)=953.00
B20E BLDG 11
FFE: 965.00 GFE: 964.67
99.0' of 18" HDPE @ 0.70%
CBMH 610 RIM=963.00 INV(NW)=957.77 INV(NE)=959.45 INV OUT=957.77
10.7' of 12" HDPE @ 0.44%
CB 610A RIM=965.10 INV OUT=959.50
8"X6" TEE W/ 6" G.V.
HYDRANT W/ 6" G.V. & 6"X8" TEE
6G FFE: 966.00
B20E BLDG 12
FFE: 965.00 GFE: 964.67
67.6' of 21" HDPE @ 0.60%
CBMH 608 RIM=963.30 INV(NW)=956.79 INV OUT=956.79
126.7' of 24" HDPE @ 0.44%
6"X8" SAN WYE INV(AT MAIN)=949.73 6" SAN SERVICE INV(AT BLDG)=952.50
FFE: 966.00 GFE: 965.67
8"X6" TEE W/ 6" G.V.
CBMH 609 RIM=963.20 INV(NW)=957.20 INV OUT=957.20
114.1' of 21" HDPE @ 0.50%
SAN MH-5 RIM=964.00 INV(NW)=951.16 INV(NE)=951.16 INV OUT=951.06
6" SAN SERVICE INV=952.50
12GS-2
FFE: 966.16
FFE: 966.50
B20E BLDG 9
FFE: 966.50 GFE: 966.16
CB 710 RIM=964.90 INV OUT=961.25
6"X8" SAN WYE INV(AT MAIN)=952.40 6" SAN SERVICE INV(AT BLDG)=953.50
74.4' of 12" HDPE @ 0.66%
CBMH 709 RIM=964.50 INV(W)=960.76 INV OUT=960.76
8"X6" TEE W/ 6" G.V.
HYDRANT W/ 6" G.V. & 6"X8" TEE
8" C900 PVC WATERMAIN
SAN MH-11 RIM=965.50 INV(NW)=952.22 INV(NE)=952.22 INV OUT=952.12
SAN MH-10 RIM=965.00 INV(NW)=951.79 INV(NE)=951.79 INV OUT=951.69
SAN MH-13 RIM=965.00 INV(N)=952.55 INV OUT=952.45
CB 502 RIM=965.60 INV(SW)=959.64 INV OUT=959.64
8" G.V.
CBMH 502 RIM=965.60 INV(SW)=959.64 INV OUT=959.64
6"X8" TEE W/ 6" G.V.
6"X8" SAN WYE INV=955.83
B20E BLDG 3
FFE: 967.00 GFE: 966.67
168.1' of 15" HDPE @ 1.80%
6" SAN SERVICE INV=957.50
SAN MH-9 RIM=965.80 INV(NW)=957.00 INV OUT=956.00
6" C900 PVC WATERMAIN
CBMH 506 RIM=965.00 INV(SE)=959.90 INV OUT=959.90
CBMH 507 RIM=965.00 INV(NE)=960.13 INV OUT=960.13
50.5' of 12" HDPE @ 0.44%
CBMH 505 RIM=964.80 INV(SE)=959.58 INV OUT=959.58
26.7' of 12" HDPE @ 1.20%
6" SAN SERVICE INV=958.75
FFE: 967.00 GFE: 966.67
CBMH 508 RIM=964.65 INV(NW)=960.60 INV OUT=960.60
CB 509 RIM=964.65 INV OUT=960.70
CBMH 511 RIM=963.50 INV(NE)=959.35 INV OUT=957.85
108.1' of 12" HDPE @ 0.44%
35.7' of 24" HDPE @ 0.60%
MH 700 RIM=966.50 INV(SE)=958.05 INV OUT=958.05
122.0' of 24" HDPE @ 0.60%
CBMH 702 RIM=965.00 INV(SW)=959.33 INV OUT=959.33
95.8' of 24" HDPE @ 0.35%
CB 700A RIM=964.25 INV OUT=960.70
10.5' of 24" HDPE @ 0.50%
CBMH 701 RIM=965.15 INV(SW)=958.78 INV(SE)=960.51 INV OUT=958.78
CBMH 703 RIM=964.80 INV(SW)=959.67 INV OUT=959.67
42.8' of 12" HDPE @ 0.44%
6"X8" TEE W/ 6" G.V.
HYDRANT W/ 6" G.V. & 6"X8" TEE
6" SAN SERVICE INV=955.00
FFE: 966.50
HYDRANT W/ 6" G.V. & 6"X10" REDUCER
SAN MH-14 RIM=965.50 INV(W)=954.00 INV OUT=953.62
CB 703A RIM=964.25 INV OUT=960.70
10" STUB W/ 10" G.V. TO COSTCO
10"X12" CROSS
12"X12" TEE W/ 12" G.V.
CB 310A RIM=964.27 INV OUT=959.33
8"X12" TEE W/ 8" G.V.
CONNECT TO EXISTING 8" DIP WATERMAIN
CBMH 310B RIM=963.60 INV(S)=954.63 INV OUT=954.63
57.7' of 18" HDPE @ 0.77%
164.1' of 18" HDPE @ 0.77%
CBMH 309 RIM=963.75 INV(SE)=952.82 INV OUT=952.82
76.3' of 24" RCP @ 1.62%
CBMH 310 RIM=964.27 INV(S)=954.19 INV(SE)=954.06 INV(NE)=959.19 INV OUT=954.06
98.0' of 24" RCP @ 1.70%
12" G.V.
10"x12" TEE W/ 10" G.V. STUB TO COSTCO
31.3' of 12" RCP @ 0.44%
CB 311A RIM=963.59 INV OUT=959.40
31.4' of 12" RCP @ 0.44%
12" C900 PVC WATERMAIN
8"X12" TEE W/ 8" G.V.
8"X12" TEE W/ 8" G.V.
COSTCO WHOLESALE
184,545 S.F. FFE: 966.00
ALLIANT
733 Marquette Avenue
Suite 700
Minneapolis, MN 55402
612.758.3080
www.alliant-inc.com
OAK RIDGE COMMONS
PLANNED UNIT DEVELOPMENT SUBMITTAL
HWY 41 & PEAVEY ROAD
CHASKA, MN
UTILITY PLAN - VIEW 3
I hereby certify that this plan, specification, or report was prepared by me or under my direct supervision and that I am a duly Licensed PROFESSIONAL ENGINEER under the laws of the State of MINNESOTA
CLARK WICKLUND, PE
4-25-22 Date
40922 License No.
QUALITY ASSURANCE/CONTROL
BY DATE
DATE ISSUE
9-7-21 PUD RESUBMITTAL
9-30-21 PROGRESS
10-11-21 PUD RESUBMITTAL
10-22-21 CITY COMMENTS
10-26-21 CITY COMMENTS
11-17-21 CCWMO RESUBMITTAL
11-17-21 BID SET
1-10-22 SIGNAGE UPDATE
2-1-22 PUD RESUBMITTAL
3-15-22 LANDSCAPE PLAN UPDATE
3-28-22 CONSTRUCTION DOCUMENTS
4-25-22 CITY & COUNTY COMMENTS
5-4-22 BASIN QTYS
5-27-22 CITY COMMENTS
PROJECT TEAM DATA
DESIGNED: MK
DRAWN: MLS
PROJECT NO: 221-0004
C-6.3
Drawing name: X:\2021\210004\plan sheets\210004utl.dwg May 27, 2022 - 8:42am

Potential Building Turn Sequence:
CH,1,2,3,7,9,10,14,13,12,11,8,6,5,4

- Mobilization 1
- Mobilization 2
- Mobilization 3
- Mobilization 4
- Mobilization 5
- Mobilization 5A

-Base course will be placed down in the beginning of the project for staging and construction access but final pavement will not be placed until the end of the project when Mobilization 5 completes.



SITE PLAN GENERAL NOTES

1. BUILDING STREET ADDRESS LABEL/BUILDING SIGNAGE (ON EACH BUILDING), TO BE APPROVED BY LOCAL FIRE DEPARTMENT & AHJ AND COORDINATED BY OWNER
2. UNIT NUMBERS (BY OWNER), VERIFY NUMBER REQUIREMENTS WITH LOCAL FIRE DEPARTMENT
3. DURING CONSTRUCTION ALL ACCESS ROADS SHALL COMPLY WITH LOCAL AHJ & FIRE MARSHAL OFFICIALS REQUIREMENTS, BE ABLE TO HANDLE 75,000 LBS AND BE AN ALL-WEATHER DRIVABLE SURFACE
4. DURING CONSTRUCTION AN ADEQUATE WATER SUPPLY TO HANDLE THE FIRE FLOW REQUIREMENTS OF THE LOCAL FIRE CODE SHALL BE AVAILABLE ON SITE PRIOR TO ARRIVAL OF ANY COMBUSTIBLE MATERIAL. THIS MAY BE EITHER THE FIRE HYDRANT SYSTEM OR SOME OTHER FORM OF WATER SUPPLY REVIEWED AND ACCEPTED BY THE LOCAL FIRE MARSHALL
5. REFER TO ALL PROJECT NOTES, GENERAL SPECIFICATIONS, & ACCESSIBILITY STANDARDS, ETC.
6. MAINTAIN REQUIRED CLEARANCES BETWEEN ALL ELECTRICAL EQUIPMENT & CONDENSER UNITS
7. LETTER INDICATION 'A' OR 'B' FOLLOWING BUILDING TYPE NOMENCLATURE INDICATES EXTERIOR FINISH COLOR SCHEME - SEE ELEVATIONS & OWNER FINISH SCHEDULE
8. SLOPE GRADE AWAY FROM BUILDINGS
9. LANDSCAPE AND DECORATIVE HARDSCAPE INFORMATION AND DETAILS BY OTHERS - REFER TO LANDSCAPE DRAWINGS
10. OUTDOOR POOL DESIGN AND DETAILS BY DESIGN-BUILD POOL CONTRACTOR - REFER TO THE ARCHITECTURAL SET FOR REFERENCE ONLY
11. ARCHITECTURAL SITE PLAN SHOWN IS FOR REFERENCE PURPOSES ONLY. FOR COMPLETE DIMENSIONS, GRADING, UTILITY, PARKING, SITE DETAIL INFORMATION, ETC. REFER TO CIVIL DRAWINGS

SITE PLAN LEGEND

- BUILDING(S) TO RECEIVE BEVERAGE CENTER: BUILDING 11
- BUILDING(S) TO RECEIVE STANDING SHOWER: BUILDING(S) 8
- BUILDING(S) TO RECEIVE UPGRADE PACKAGE: BUILDING(S) 2 & 13
- BUILDING(S) TO RECEIVE SMART HOME PACKAGE: BUILDING(S) 5 & 12
- BUILDING(S) TO RECEIVE CUSTOM CLOSETS: BUILDING(S) 7
- ANSI "TYPE A" ACCESSIBLE UNITS
- IMAGINARY PROPERTY LINE
- ACCESSIBLE ROUTE

LOCATION / VICINITY MAP

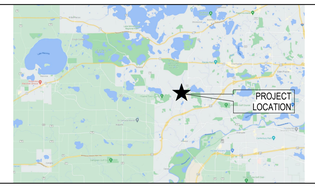

N. CHESTNUT ST. & OAKRIDGE DR.
CHASKA, MN 55318

TRUE NORTH

SITE KEYNOTES

KEY	DESCRIPTION
1	KNOX BOX - COORDINATE LOCATION & TYPE WITH LOCAL FIRE DEPARTMENT
2	POOL ENCLOSURE GATES TO MEET LOCAL CODE AND SAFETY REQUIREMENTS AND SHALL SWING IN THE DIRECTION OF EGRESS AND HAVE HARDWARE THAT COMPLIES WITH LOCAL BUILDING & POOL CODES
4	ACCESSIBLE PARKING STALL AND AISLE WITH ACCESSIBLE PARKING STALL SIGNAGE PER LOCAL CODE REQUIREMENTS
5	MASONRY PIER LOCATIONS AT VEHICLE ENTRY/EXIT GATES. REFER TO SHEET A580 FOR PIER DETAILS.
6	MONUMENT SIGN WITH POWER COORDINATE LOCATION WITH OWNER AND SIGN VENDOR. REFER TO SHEET A590 FOR SIGN DETAILS
7	48" HIGH VINYL COATED CHAINLINK FENCE AND 42" GATE w/ LATCH AT PET PLAYGROUND. REFER TO SHEET A580 FOR FENCE DETAILS
8	CONCRETE PAD WITH BROOM FINISH
10	LOCATION OF (1) 30' FLAG POLE AND (1) 24' FLAG POLE. COORDINATE FINAL LOCATION OF POLES AND LIGHTING WITH OWNER
12	10'-0" X 10'-0" CEDAR PERGOLA STRUCTURE ON 12'-0" X 12'-0" REINFORCED CONCRETE SLAB
13	MANUAL VEHICLE ENTRY GATE - FOR EMERGENCY USE ONLY. REFER TO SHEET A580 FOR GATE DETAILS
14	ENCLOSED YARDS WITH 48" HIGH DECORATIVE ALUMINUM FENCE AND 42" GATE AND LATCH. REFER TO SHEET A580 FOR FENCE DETAILS
15	PEDESTRIAN ACCESS GATE. PROVIDE MAGNETIC LOCK w/ FOB ACCESS AND SPRING HINGES. REFER TO SHEET A580 FOR GATE AND CLEARANCE DETAILS
16	POST MOUNTED MAGNETIC LOCK RELEASE. POST TO BE MIN. 5'-0" FROM FENCE LINE, ADJACENT TO SIDEWALK.

UTILITY KEYNOTES

KEY	DESCRIPTION
E	ELECTRICAL METER BANK LOCATED AT THIS CORNER OF BUILDING
G	GAS METER BANK LOCATED AT THIS CORNER OF BUILDING
I	IRRIGATION SYSTEM CONNECTION LOCATED AT THIS BUILDING
SP	SPRINKLER ROOM LOCATED AT THIS CORNER OF BUILDING
T	TRANSFORMER LOCATION

PLAN NORTH

TRUE NORTH

Sewer Routing Direction

4/5/2022 12:13:57 PM

Kahler Slater

CONTINENTAL PROPERTIES

CONTINENTAL 589 FUND LLC
W134 N8675 EXECUTIVE PARKWAY
MENOMONEE FALLS, WI 53051
262.502.5500 * FAX 262.502.5522

I hereby certify that this plan, specification, or report was prepared by me or under my direct supervision and that I am a duly Licensed Architect under the laws of the state of Minnesota.

Glenn M Roby
License Number 59256
4/8/2022

Revisions

CONSTRUCTION DOCUMENTS

Drawing Date
03/28/2022

SPRINGS AT McKNIGHT LAKE
N. CHESTNUT ST. & OAKRIDGE DR.
CHASKA, MN 55318

Project No.
221001.06

Sheet Title
ARCHITECTURAL SITE PLAN

Copyright © 2022 Kahler Slater, Inc. All rights reserved.

790 North Water Street, Milwaukee, Wisconsin 53202
Telephone 414.272.2000 Fax 414.272.2001

Sheet No.
A100S

Sign Package

Springs at McKnight Lake

Chaska, MN

02.17.22

SPRINGS

APARTMENTS

Sign Systems Inc.

Monument Sign

Double Sided



Side View | Front View | Quantity (1)

SW 7632 Modern Gray
SW 7615 Sea Serpent
SW 7624 Slate Tile
3M 3630-69 Duranodic

Illuminated

46” x 113” = 36 Total Sq Ft





Isometric View

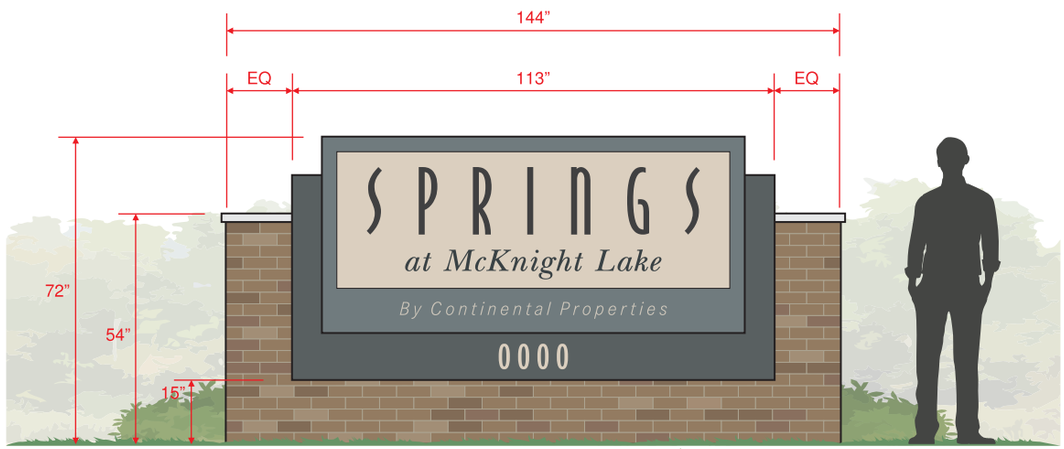

Masonry Base By Others

Simulated Illumination



CLIENT: SPRINGS APARTMENTS

CONTACT: A

SITE: Chaska, MN

FILE:
Sales Rep
CJ Hines
File Name
springs MCKNIGHT LAKE
Design
TDH
Draft: 02.14.22
Rev 1: 02.17.22
Rev 2: 02.17.22
Rev 3:
Rev 4:
Rev 5:
Rev 6:

CLIENT REVIEW
- Approved
- Approved as Noted
- Revise & Re-submit

Name
Title
Date

This is an original unpublished drawing, created by Sign Systems, Inc. It is submitted for your use in connection with the project being planned for by Sign Systems, Inc. It is not to be shown to anyone outside of your organization, nor is it to be used, reproduced, copied, or exhibited in any other fashion without expressed consent from an authorized Sign Systems, Inc representative. All or any part of this design, excluding registered trademarks, remains the property of Sign Systems, Inc. Any use that is not authorized may result in a design fee to be determined by Sign Systems, Inc.

Sign Systems Inc.
www.signsystemsnc.com

Tenant Sign

Double Sided

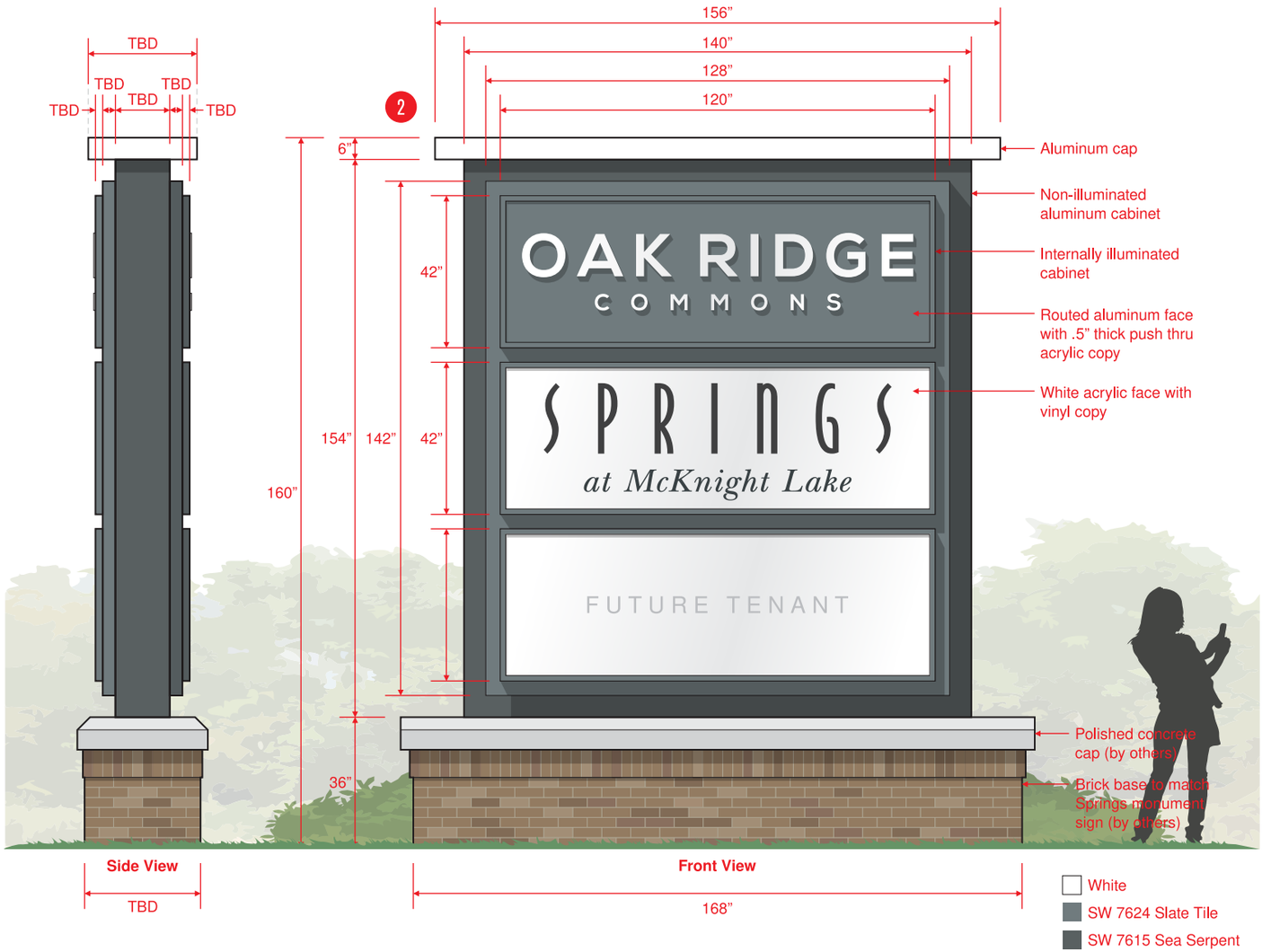

Illuminated

Simulated Illumination



CLIENT: SPRINGS APARTMENTS

CONTACT: A

SITE: Chaska, MN

FILE:
Sales Rep
CJ Hines
File Name
springs MCKNIGHT LAKE
Design
TDH
Draft: 02.14.22
Rev 1: 02.17.22
Rev 2: 02.17.22
Rev 3:
Rev 4:
Rev 5:
Rev 6:

CLIENT REVIEW
- [ ] Approved
- [ ] Approved as Noted
- [ ] Revise & Re-submit

Name

Title

Date

This is an original unpublished drawing, created by Sign Systems, Inc. It is submitted for your use in connection with the project being planned for by Sign Systems, Inc. It is not to be shown to anyone outside of your organization, nor is it to be used, reproduced, copied, or exhibited in any other fashion without expressed consent from an authorized Sign Systems, Inc representative. All or any part of this design, excluding registered trademarks, remains the property of Sign Systems, Inc. Any use that is not authorized may result in a design fee to be determined by Sign Systems, Inc.

Sign Systems Inc.
www.signsystemsnc.com

Wall Sign

Single Sided

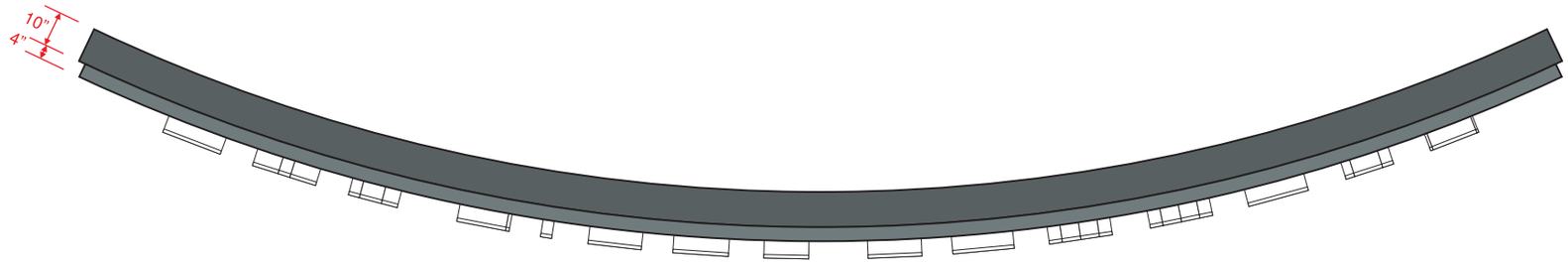

Top View

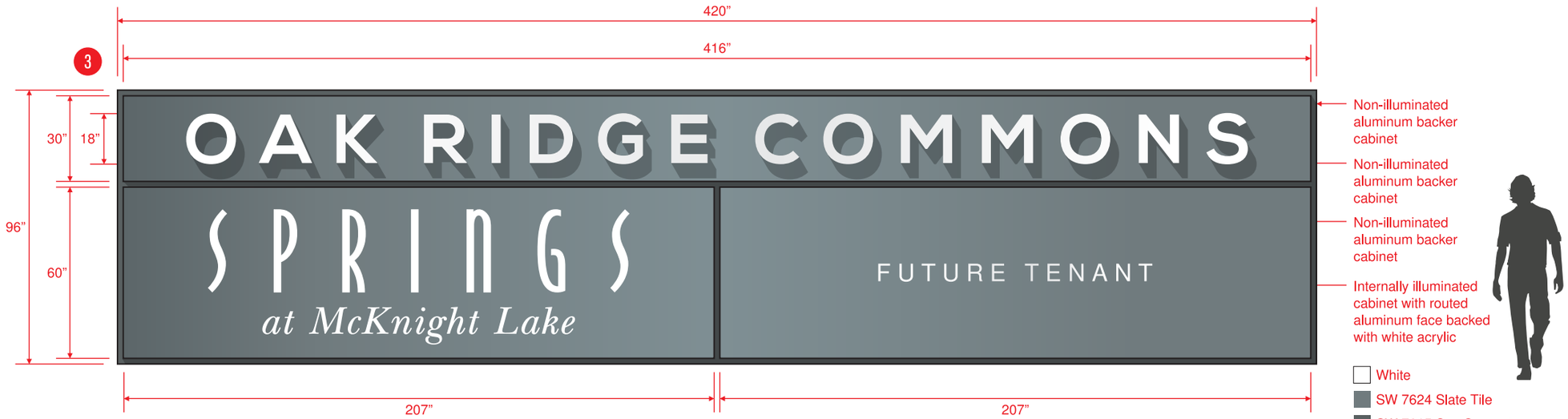

Front View

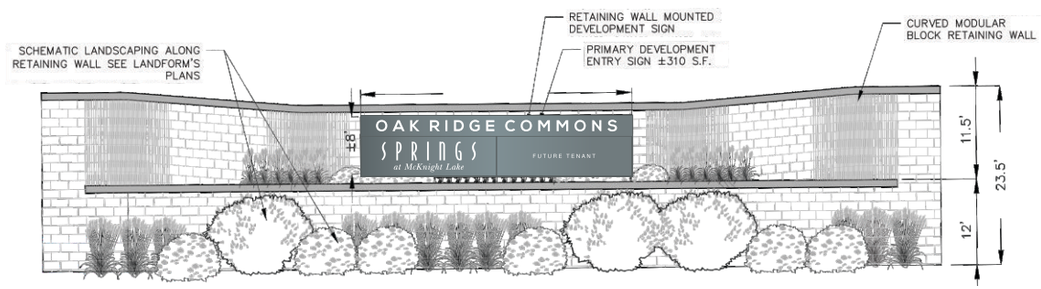

Simulated Illumination



Elevation depiction intended for general concept illustration and is not to exact scale. Actual sizing & perspective will vary slightly from image.

CLIENT: SPRINGS APARTMENTS

CONTACT: A

SITE: Chaska, MN

FILE:
Sales Rep
CJ Hines
File Name
springs MCKNIGHT LAKE
Design
TDH
Draft: 02.14.22
Rev 1: 02.17.22
Rev 2: 02.17.22
Rev 3:
Rev 4:
Rev 5:
Rev 6:

CLIENT REVIEW
- Approved
- Approved as Noted
- Revise & Re-submit

Name

Title

Date

This is an original unpublished drawing, created by Sign Systems, Inc. It is submitted for your use in connection with the project being planned for by Sign Systems, Inc. It is not to be shown to anyone outside of your organization, nor is it to be used, reproduced, copied, or exhibited in any other fashion without expressed consent from an authorized Sign Systems, Inc representative. All or any part of this design, excluding registered trademarks, remains the property of Sign Systems, Inc. Any use that is not authorized may result in a design fee to be determined by Sign Systems, Inc.

Sign Systems Inc.
www.signsystemsnc.com

Site Plan

1



2



3



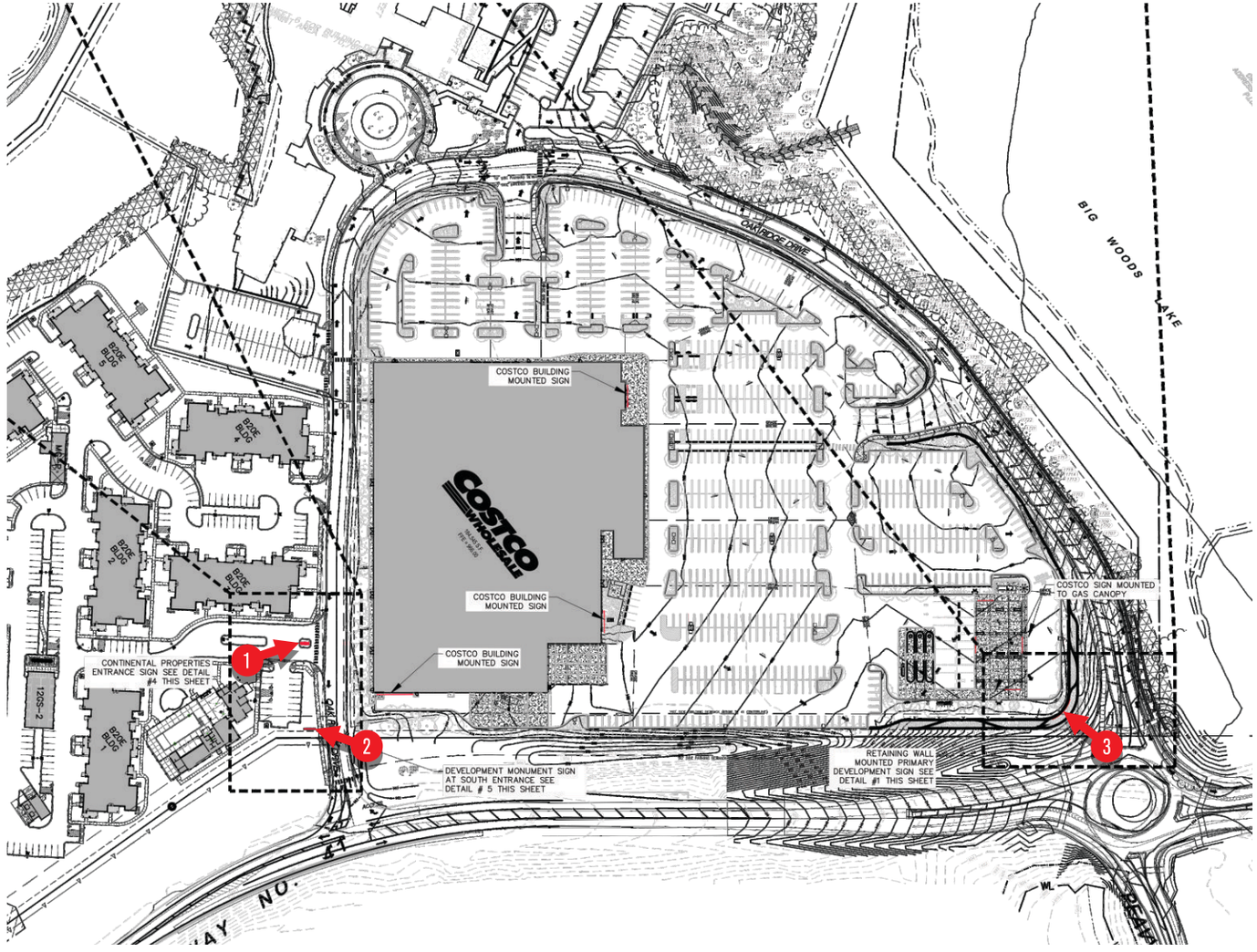

CLIENT: SPRINGS APARTMENTS

CONTACT: A

SITE: Chaska, MN

FILE:
Sales Rep
CJ Hines
File Name
springs MCKNIGHT LAKE
Design
TDH
Draft: 02.14.22
Rev 1: 02.17.22
Rev 2: 02.17.22
Rev 3:
Rev 4:
Rev 5:
Rev 6:

CLIENT REVIEW
- ☐ Approved
- ☐ Approved as Noted
- ☐ Revise & Re-submit

Name

Title

Date

This is an original unpublished drawing, created by Sign Systems, Inc. It is submitted for your use in connection with the project being planned for by Sign Systems, Inc. It is not to be shown to anyone outside of your organization, nor is it to be used, reproduced, copied, or exhibited in any other fashion without expressed consent from an authorized Sign Systems, Inc representative. All or any part of this design, excluding registered trademarks, remains the property of Sign Systems, Inc. Any use that is not authorized may result in a design fee to be determined by Sign Systems, Inc.

Sign Systems Inc.
www.signsystemsnc.com

Oak Ridge Commons
Traffic Impact Study

Chaska, MN

Prepared By:
Nick Grage, PE, PTOE, RSP1

Alliant Engineering, Inc.
733 Marquette Avenue, Suite 700
Minneapolis, MN 55402

ALLIANT

DRAFT Report
September 3, 2021

Table of Contents

1.0 Introduction 1

2.0 Existing Conditions 1

2.1 Study Area Intersections 1
2.2 Data Collection 2
2.3 Traffic Operations Analysis 3

3.0 Proposed Development 5

3.1 Trip Generation and Distribution 7
3.2 Traffic Operations Analysis 8

4.0 Site Plan / Access Review 10

4.1 Site Ingress / Egress 10
4.2 Internal Traffic Circulation 10
4.3 Parking Layout 11

5.0 Conclusions 12

Appendix A: Detailed Peak Hour Traffic Volumes A1

Appendix B: Detailed Intersection Operations Analysis B1

Appendix C: Trip Generation Documentation C1

Appendix D: Parking Deck Preliminary Concept D1

List of Figures

Figure 1. Proposed Site Plan 6

List of Tables

Table 1. Annual Growth Rate 2
Table 2. Roadway Characteristics 3
Table 3. Existing Intersection Characteristics 3
Table 4. Level of Service Criteria 4
Table 5. Existing Year 2019 Operations Analysis Summary 4
Table 6. Construction Year 2022 No Build Operations Analysis Summary 4
Table 7. Proposed Intersection Characteristics 5
Table 8. Site Trip Generation 7
Table 9. Construction Year 2022 Build Operations Analysis Summary 8
Table 10. Forecast Year 2032 Operations Analysis Summary 8
Table 11. Forecast Year 2042 Operations Analysis Summary 9

1.0 Introduction

Alliant Engineering has completed a traffic impact study for the proposed Oak Ridge Commons development located adjacent to the intersections of Minnesota Trunk Highway 41 (TH 41) with Peavey Road and Oakridge Drive in Chaska, MN. The main objectives of this study are to evaluate existing traffic operations within the development, identify potential traffic impacts to the internal roadway network due to development generated trips, and recommend turn lanes and improvements to address any identified issues.

2.0 Existing Conditions

The existing conditions were reviewed to establish a baseline for identifying any future impacts associated with the proposed development. The evaluation of existing conditions includes intersection turning movement counts, field observations, and an intersection operations analysis.

2.1 Study Area Intersections

Existing and future characteristics for TH 41 intersections are summarized as follows:

- **TH 41 & Peavey Road**: Existing side-street stop-controlled intersection – which will add a west leg as part of the development and is recommended for a traffic control change to a hybrid roundabout (dual northbound and southbound lanes, eastbound right-turn bypass) in the completed *TH 41 at Peavey Road Intersection Control Evaluation (August 2021).*
- **TH 41 & Oakridge Drive**: Existing side-street stop-controlled intersection providing access to the Oak Ridge Commons development, recommended as a three-quarter access in Kimley-Horn's *Oak Ridge Development Traffic Impact Analysis (February 2020).*

Along with analyzing the TH 41 intersections, additional intersections internal to the development site were used to document operational performance and identify turn lane needs. They include:

- **Oakridge Drive & North Access**: Proposed three-legged and side-street stop-controlled intersection located 500 feet west of TH 41 / Peavey Road, serving as the primary access to the proposed discount club store and gas station.
- **Oakridge Drive & West Access**: Proposed four-legged and side-street stop-controlled intersection located 150 feet north of the existing Oak Ridge Hotel & Conference Center loading/unloading area, serving as the primary access to the proposed office building and as the secondary access to the proposed discount club store.
- **Oakridge Drive & South Access**: Proposed three-legged and side-street stop-controlled intersection located 250 feet west of TH 41 / Oakridge Drive, serving as the primary access to the proposed multi-family housing.

2.2 Data Collection

Turning movement counts were collected on Wednesday, September 17, 2019, by Kimley-Horn. After discussions with the City of Chaska and Carver County, the intersection of TH 41 / CSAH 18 (not included in this study) was recounted by Kimley-Horn on January 29, 2020; therefore, collected counts used for the analysis are assumed to be from existing year 2019.

2.2.1 Traffic Volumes

The network a.m. and p.m. peak hours, as determined by Kimley-Horn, were 7:30 to 8:30 a.m. and 4:00 to 5:00 p.m., respectively. No seasonal adjustment factors were applied to the collected data.

2.2.2 Traffic Growth Rates

Based on a review of Kimley-Horn's *Oak Ridge Development Traffic Impact Analysis (February 2020)*, which analyzed historical traffic volumes pulled from MnDOT's Traffic Data Mapping Application, a one percent annual growth rate was determined for the study area that includes the TH 41 / Peavey Road intersection. **Table 1** provides a summary of the historical volumes along TH 41, where a -0.24 percent growth rate was calculated utilizing AADT values between 1998 and 2019 (see trendline). Also shown is the 2040 AADT for TH 41 (South of CSAH 18) included in the Chaska 2040 Comprehensive Plan. With consideration of the previous traffic analysis, the declining historical rate, and the forecasted 2040 AADT, the one percent growth rate was selected to develop 2022, 2032, and 2042 forecast volumes to be used for analyses. Detailed peak hour volumes are illustrated in **Appendix A**.

Table 1. Annual Growth Rate

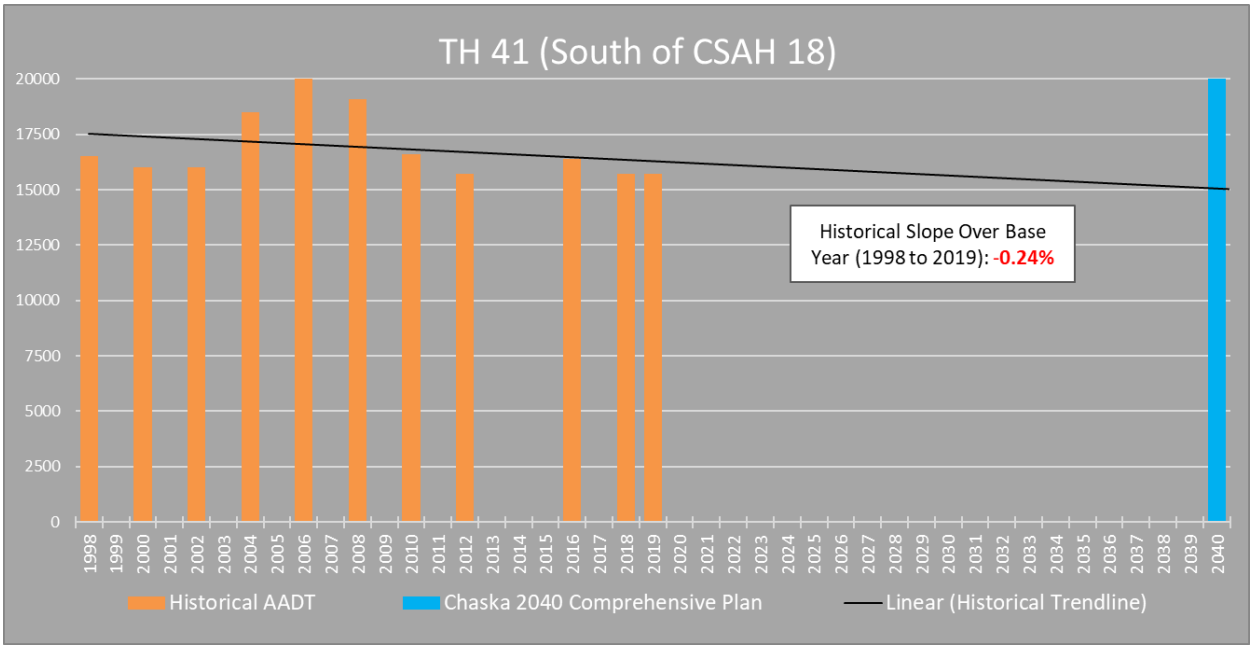

2.2.3 Roadway/Intersection Characteristics

Field observations were completed to identify roadway and intersection characteristics within the immediate study area (i.e., geometry, posted speed limits, traffic control), which are summarized in **Table 2** and **Table 3**.

Table 2. Roadway Characteristics

Roadway	Cross-Section	Speed Limit	Functional Classification
TH 41	2-Lane Undivided	50 mph	Minor Arterial
Peavey Road	2-Lane Undivided	30 mph	Local Roadway
Oakridge Drive	2-Lane Undivided	30 mph	Local Roadway

Table 3. Existing Intersection Characteristics

Intersection	Traffic Control	Lane Designation by Approach [1]			
		NB	SB	EB	WB
TH 41 & Peavey Road	Through / Stop	T / R	L / T [2]	-	LR
TH 41 & Oakridge Drive	Through / Stop	L / T [2]	T / R	LR	-

1: L = Left-Turn, T = Through, R = Right-Turn

2: Bypass-lane provided instead of dedicated turn lanes

2.3 Traffic Operations Analysis

An existing conditions traffic operations analysis was completed using VISSIM software to establish a baseline condition to which future traffic operations could be compared. Operations analysis results identify a Level of Service (LOS), which indicates the quality of traffic flow through an intersection. The LOS results are based on average delay per vehicle, which correspond to the delay threshold values shown in **Table 4**. LOS A indicates the best traffic operation, with vehicles experiencing minimal delays. LOS F indicates an intersection where demand exceeds capacity, or a breakdown of traffic flow. The LOS D/E boundary for overall operations is often used as the indicator of congestion in an urban area. For side-street stop-controlled intersections, a key measure of operational effectiveness is the side-street LOS. Long delays and poor LOS can occur on side-street approaches even if the overall intersection is functioning well, making side-street LOS a valuable design criterion.

Table 4. Level of Service Criteria

Level of Service		Description	Delay per Vehicle (seconds)	
			Signalized Intersection	Unsignalized Intersection
A	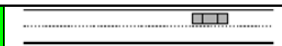	**Free Flow:** Low volumes and no delays.	0 - 10	0 - 10
B		**Stable Flow:** Speeds restricted by travel conditions, minor delays.	> 10 - 20	> 10 - 15
C		**Stable Flow:** Speeds and maneuverability closely controlled due to higher volumes.	> 20 - 35	> 15 - 25
D	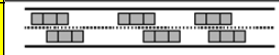	**Stable Flow:** Speeds considerably affected by change in operating conditions. High density traffic restricts maneuverability, volume near capacity.	> 35 - 55	> 25 - 35
E	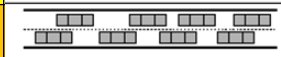	**Unstable Flow:** Low speeds, considerable delay, volume at or slightly over capacity.	> 55 - 80	> 35 - 50
F	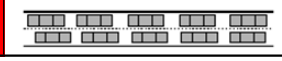	**Forced Flow:** Very low speeds, volume exceed capacity, long delays with stop and go traffic.	> 80	> 50

Source: Highway Capacity Manual, 2010 Edition, Transportation Research Board, Exhibits 18-4 & 19-1.

After LOS, the second component of the traffic operations analysis is a study of vehicular queuing, or the lineup of vehicles waiting to pass through an intersection. An intersection can operate with an acceptable LOS, but if queues from the intersection block entrances to turn lanes or adjacent driveways, unsafe operating conditions could result. The 95th percentile queue, or the length of queue with only a five percent probability of being exceeded during an analysis period, is considered the standard for design purposes.

The existing traffic operations analysis was performed at the study intersections for the observed weekday a.m. and p.m. peak hours. Results of the existing and construction year 2022 No Build traffic operations analysis, presented in **Table 5** and **Table 6**, indicate that each existing study intersection currently operates at overall LOS A or better during weekday peak hours despite the westbound TH 41 / Peavey Road approach operating at LOS F. Westbound left-turning motorists at this intersection have difficulty finding acceptable gaps, resulting in significant delay for a low volume approach. Detailed operations and queuing analysis results are presented in **Appendix B**.

Table 5. Existing Year 2019 Operations Analysis Summary

Intersection	AM Peak Hour		PM Peak Hour	
	LOS	Delay (s)	LOS	Delay (s)
TH 41 & Peavey Road	A / C	1.1 / 15.7	A / F	5.1 / 63.0
TH 41 & Oakridge Drive	A / B	1.2 / 11.5	A / B	1.0 / 12.8

Overall Intersection LOS / Worst Approach LOS
Overall Intersection Delay / Worst Approach Delay

Table 6. Construction Year 2022 No Build Operations Analysis Summary

Intersection	AM Peak Hour		PM Peak Hour	
	LOS	Delay (s)	LOS	Delay (s)
TH 41 & Peavey Road	A / C	1.3 / 17.5	A / F	6.4 / 84.0
TH 41 & Oakridge Drive	A / B	1.3 / 11.8	A / B	1.1 / 14.0

Overall Intersection LOS / Worst Approach LOS
Overall Intersection Delay / Worst Approach Delay

3.0 Proposed Development

The proposed Oak Ridge Commons development site is 66.8 acres and currently includes the Oak Ridge Hotel & Conference Center with one access to TH 41 at Oakridge Drive. The proposed development would convert the hotel and conference center into a 131,000 square foot office building and build a 161,000 square foot discount club store (which includes a gas station with 24 fueling locations) and 280 units of multi-family housing (see **Figure 1**: Proposed Site Plan). The original plan, per Kimley-Horn's *Oak Ridge Development Traffic Impact Analysis (February 2020)*, included 375 units of senior housing which are now being shown as approximately 280 units of multi-family housing. An additional access to TH 41 at Peavey Road is also proposed as part of the development. Proposed intersection characteristics internal to the development and modifications to the existing TH 41 intersections as recommended by the completed *TH 41 at Peavey Road Intersection Control Evaluation (August 2021)* are summarized in **Table 7**.

Table 7. Proposed Intersection Characteristics

Intersection	Traffic Control	Lane Designation by Approach [1]			
		NB	SB	EB	WB
TH 41 & Peavey Road	Roundabout	LT / TR	LT / TR	LT / R	LTR
TH 41 & Oakridge Drive	Through / Stop	L / T	T / R	R	-
Oakridge Drive & North Access	Through / Stop	L / R	-	TR	L / T
Oakridge Drive & West Access	Through / Stop	L / TR	L / TR	LTR	L / TR
Oakridge Drive & South Access	Through / Stop	LR	-	TR	LT

1: L = Left-Turn, T = Through, R = Right-Turn

SITE DATA:

SITE SUMMARY	
OAKRIDGE COMMONS	
PROPERTY AREA	±66.83 AC
ZONING	
EXISTING ZONING	PLANNED MULTI-USE DEVELOPMENT
PROPOSED ZONING	PLANNED MULTI-USE DEVELOPMENT
PARKING SETBACKS	
ROAD SIDE	10'
INTERIOR SIDE YARD	5'
TREED STEEP SLOPE SETBACK	50'
FROM CENTERLINE OF HWY 41	90'
BUILDING SETBACKS	
CITY OUTLOT	40'
RAILROAD	50'
TREED STEEP SLOPE BUILDING SETBACK	50'
FROM CENTERLINE OF HWY 41	150'
BUFFERS	
TREED STEEP SLOPE BUFFER	30'
DELINEATED WETLANDS	30'

LOT SUMMARY	
AREAS	
PROPOSED PROPERTY	**±66.83 AC**
LOT 1 - EXISTING HOTEL & CONFERENCE CENTER	
LOT 1 PROPERTY AREA	**±22.74 AC**
PROPOSED IMPERVIOUS AREA	**±7.53 AC**
PROPOSED PERVIOUS AREA	**±15.49 AC**
EXISTING BUILDING FOOTPRINT (HOTEL & CONFERENCE)	**± 75,815 S.F.**
EXISTING BUILDING FLOOR AREA (HOTEL & CONFERENCE)	**± 171,000 S.F.**
REQUIRED PARKING	**294 STALLS**
PROPOSED PARKING	**286 STALLS**
AUXILIARY PARKING LOT PARKING STALLS	**20 STALLS**
TOTAL PARKING PROVIDED	**306 STALLS**
A.D.A. PARKING STALLS REQUIRED / PROPOSED STALLS PROVIDED	**8 A.D.A. STALLS / 8 A.D.A. STALLS**
LOT 2 - PROPOSED COSTCO DEVELOPMENT	
LOT 2 PROPERTY AREA	**±16.33 AC**
PROPOSED IMPERVIOUS AREA	**±13.82 AC**
PROPOSED PERVIOUS AREA	**±2.54 AC**
BUILDING AREA - RETAIL (COSTCO)	**±164,545 S.F.**
REQUIRED PARKING	**470 STALLS**
PARKING STALLS PROVIDED	**727 STALLS**
AUXILIARY PARKING LOT PARKING STALLS (FROM LOT ONE)	**52 STALLS**
TOTAL PROPOSED PARKING	**779 STALLS**
A.D.A PARKING REQUIRED / PROPOSED STALLS PROVIDED	**17 A.D.A. STALLS / 17 A.D.A. STALLS**
LOT 3 - MULTIFAMILY	
LOT 3 PROPERTY AREA	**±27.76 AC**
PROPOSED IMPERVIOUS AREA	**16.33 AC (60.2%)**
PROPOSED PERVIOUS AREA	**10.83 AC (39.8%)**
STEEP SLOPE AREA	**± 3.28 AC**
PROPOSED DWELLING UNITS	**280 UNITS**
REQUIRED PARKING	**560 STALLS**
PROPOSED PARKING	**576 STALLS (2.06 PER UNIT)**

PARKING DATA:

PARKING REQUIREMENTS SUMMARY
HOTEL
1 STALL / ROOM
CONFERENCE CENTER
15 STALLS PLUS 1 STALL / 300 S.F. OVER 2,000 S.F.
RETAIL
1 STALL / 350 S.F. GENERAL FLOOR AREA
MULTIFAMILY
2 STALLS / 1 DWELLING UNIT
SENIOR LIVING
1 STALL / 2 DWELLING UNITS

PARKING LOT LANDSCAPE CALCULATIONS	
INTERNAL PARKING LANDSCAPING REQUIRED IS 10% OF THE TOTAL PARKING AREA	
LOT 1 NORTH PARKING LOT	**%**
IMPERVIOUS PARKING AREA	131,696 S.F.
LANDSCAPE ISLAND AREA	47,455 S.F. (36.03%)
LOT 2 - COSTCO PARKING LOT	**%**
IMPERVIOUS PARKING AREA	437,800 S.F.
LANDSCAPE ISLAND AREA	44,493 S.F. (10.16%)
LOT 3 - MULTIFAMILY	**%**
IMPERVIOUS PARKING AREA	210,762 S.F.
LANDSCAPE ISLAND AREA	25,042 S.F. (11.88%)

LEGEND:

- PROPOSED CURB & GUTTER
- PROPOSED OUTFALL CURB & GUTTER (PROVIDE 5' CURB TRANSITION)
- MOUNTABLE CURB (PROVIDE 5' CURB TRANSITION)
- CURB & GUTTER (BY OTHERS)
- CONCRETE PAVEMENT
- HEAVY DUTY BITUMINOUS PAVEMENT
- LIGHT DUTY BITUMINOUS PAVEMENT
- EXISTING DECIDUOUS TREE TO REMAIN
- EXISTING EVERGREEN TREE TO REMAIN

NOTE:
SEE INDIVIDUAL TREE SYMBOLS FOR CALIPER SIZE

- CONSTRUCTION LIMITS
- LOT LINE
- PROPERTY LINE
- DRAINAGE & UTILITY EASEMENT
- BUILDING SETBACK
- EXISTING WETLAND
- WETLAND SETBACK
- 30' TREED STEEP SLOPE BUFFER
- 50' TREED STEEP SLOPE BUILDING SETBACK

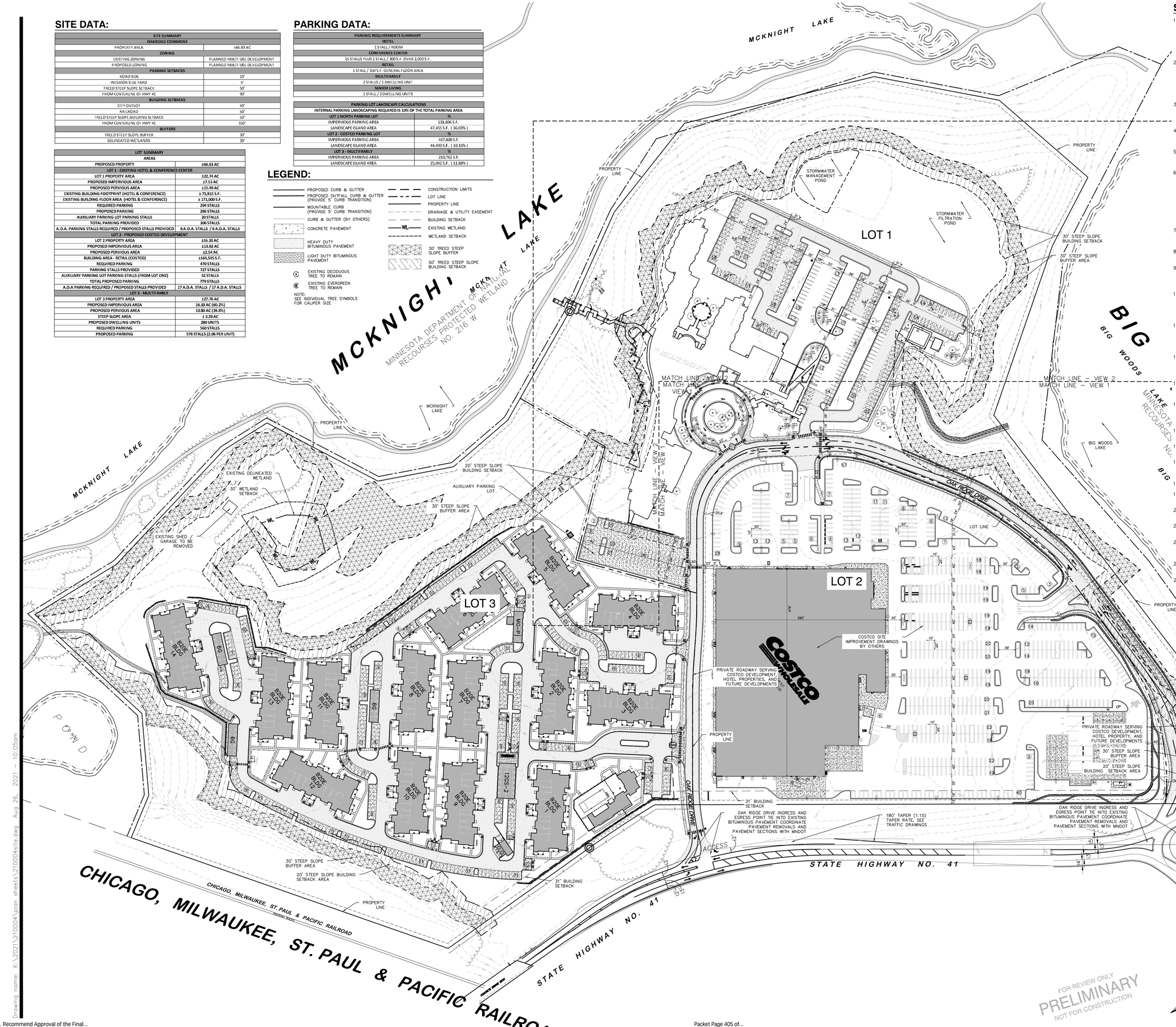

SITE NOTES

1. PRIOR TO STARTING CONSTRUCTION, THE CONTRACTOR SHALL BE RESPONSIBLE TO MAKE SURE THAT ALL REQUIRED PERMITS AND APPROVALS HAVE BEEN OBTAINED. NO CONSTRUCTION OR FABRICATION SHALL BEGIN UNTIL THE CONTRACTOR HAS RECEIVED AND THOROUGHLY REVIEWED ALL PLANS AND OTHER DOCUMENTS APPROVED BY ALL OF THE PERMITTING AUTHORITIES.
2. CONTRACTOR SHALL FIELD VERIFY THE LOCATIONS AND ELEVATIONS OF EXISTING UTILITIES AND TOPOGRAPHIC FEATURES, SUCH AS EXISTING GUTTER GRADES AT THE PROPOSED DRIVEWAYS, PRIOR TO THE START OF SITE GRADING. THE CONTRACTOR SHALL IMMEDIATELY NOTIFY THE ENGINEER OF ANY DISCREPANCIES OF VARIATIONS FROM THE PLANS.
3. ALL WORK SHALL BE PERFORMED IN ACCORDANCE WITH THESE PLANS AND SPECIFICATIONS AND THE REQUIREMENTS AND STANDARDS OF THE LOCAL GOVERNING AUTHORITY.
4. CONTRACTOR IS RESPONSIBLE FOR DEMOLITION & REMOVAL OF ALL EXISTING STRUCTURES WHICH INTERFERE WITH NEW WORK AS SHOWN.
5. CONCRETE SIDEWALK AND CURB & GUTTER SHALL BE REMOVED TO NEAREST CONSTRUCTION JOINT OUTSIDE THE REMOVAL LIMITS.
6. ALL DIMENSIONS, GRADES, EXISTING AND PROPOSED INFORMATION SHOWN ON THE PLANS SHALL BE FIELD VERIFIED BY THE CONTRACTOR PRIOR TO CONSTRUCTION. CONTRACTOR SHALL NOTIFY THE CONSTRUCTION MANAGER IF ANY DISCREPANCIES EXIST PRIOR TO PROCEEDING WITH CONSTRUCTION FOR NECESSARY PLAN OR GRADE CHANGES. NO EXTRA COMPENSATION SHALL BE PAID TO THE CONTRACTOR FOR WORK HAVING TO BE REDONE DUE TO INFORMATION SHOWN INCORRECTLY ON THESE PLANS IF SUCH NOTIFICATION HAS NOT BEEN GIVEN.
7. DIMENSIONS SHOWN ARE TO FACE OF CURB, CENTER OF STRUCTURE, EDGE OF SIDEWALK OR EXTERIOR OF BUILDING.
8. ALL CONCRETE SIDEWALK ADJACENT TO BUILDING SHALL BE SEPARATED BY A 1/2" EXPANSION JOINT.
9. PROTECT EXISTING CONCRETE SIDEWALKS DURING ALL PHASES OF CONSTRUCTION. CONTRACTOR TO REPLACE ANY CRACKED OR BROKEN PANELS CAUSED BY SITE CONSTRUCTION.
10. CONTRACTOR IS RESPONSIBLE FOR THE REMOVAL & DISPOSAL OF THE EXISTING BITUMINOUS. BITUMINOUS SHALL BE SAW CUT OR JACK HAMMERED FOR STRAIGHT EDGES. TACK SHALL BE USED ON BITUMINOUS EDGE PRIOR TO PATCHING. MATCH EXISTING GRADES.
11. CONTRACTOR SHALL PROTECT ADJOINING PROPERTIES & STRUCTURES FROM HAZARDS ASSOCIATED WITH HIS CONSTRUCTION ACTIVITIES & SHALL BE RESPONSIBLE FOR ALL DAMAGES TO PROPERTIES & STRUCTURES THAT OCCUR AS A RESULT OF THESE ACTIVITIES.
12. CONTRACTOR SHALL NOT IMPEDE EXISTING TRAFFIC CIRCULATION TO ADJACENT BUSINESSES OR HOMES. PROVIDE TRAFFIC CONTROL DURING CONSTRUCTION PER MNDOT STANDARDS.
13. CONTRACTOR SHALL PERFORM SWEEPING ON PRIVATE PARKING AREAS AND PUBLIC STREETS AT LEAST ONCE A WEEK, ONCE A DAY IF NEEDED.
14. CONTRACTOR SHALL BE HELD FULLY RESPONSIBLE TO PREVENT AND ELIMINATE ANY DUST NUISANCE OCCASIONED BY AND DURING CONSTRUCTION, UNTIL THE PROJECT HAS BEEN COMPLETED AND HANDED OVER.
15. REFER TO ARCHITECTURAL DRAWINGS FOR CONCRETE STOOPS ADJACENT TO PROPOSED BUILDING.
16. CONTINUOUS CONCRETE CURB & GUTTER WHICH CHANGES TYPE SHALL HAVE A FIVE FOOT TRANSITION.
17. ALL CONCRETE CURB AND GUTTER ADJACENT TO CONCRETE WALK BE SEPARATED BY A 1/2 INCH EXPANSION JOINT.
18. PARKING LOT STRIPING SHALL BE 4 INCH WHITE.
19. ALL WORK WITHIN THE R.O.W. STALL COMPLY WITH MNDOT ENGINEERING DESIGN STANDARDS.
20. ALL CURB AND GUTTER TO BE CONCRETE B612 CURB UNLESS NOTED OTHERWISE.
21. CONCRETE APRONS TO BE INSTALLED FOR ALL ACCESS DRIVES ONTO PUBLIC STREETS PER CITY STANDARDS.
22. ALL CONCRETE PADS TO BE 3000 PSI AIR ENTRAINED 6" CONCRETE WITH #4 BARS @ 12" O.C. AND BROOM FINISHED
23. REFER TO PHOTOMETRIC PLAN FOR LOCATIONS, FOOTCANDLE PRINT OUT AND SPECIFICATIONS.
24. RETAINING WALLS, WHERE HEIGHT IS MORE THAN 30" FROM FINISHED GRADE, SHALL HAVE A 42" GUARDRAIL OR FENCE ATOP THE WALL UNLESS OTHERWISE NOTED ON PLANS.

ALLIANT
733 Marquette Avenue
Suite 700
Minneapolis, MN 55402
612.758.3080
www.alliant-inc.com

OAK RIDGE COMMONS
PLANNED UNIT DEVELOPMENT SUBMITTAL
HWY 41 & PEAVEY ROAD
CHASKA, MN

OVERALL SITE PLAN

I hereby certify that this plan, specification, or report was prepared by me or under my direct supervision and that I am a duly Licensed PROFESSIONAL ENGINEER under the laws of the State of MINNESOTA

CLARK WICKLUND, PE

Date License No.

QUALITY ASSURANCE/CONTROL

BY	DATE

DATE	ISSUE
1-18-21	GRADING PROGRESS
2-17-21	PROGRESS SITE PLANS
3-11-21	SCHEMATIC UTIL. ROUTINGS
4-6-21	PUD SUBMITTAL
4-7-21	PUD SUBMITTAL
4-8-21	PARKING CLARIFICATION
4-30-21	DEMOLITION REV.
6-18-21	SITE PLAN REVIEW
8-26-21	PROGRESS

PROJECT TEAM DATA

DESIGNED:	MK
DRAWN:	MLS
PROJECT NO:	221-0004

C-3.0

Drawing name: X:\2021\210004\plan sheets\210004site.dwg Aug 26, 2021 - 10:05am

3.1 Trip Generation and Distribution

Trip generation estimates for the proposed Oak Ridge Commons development reflect values and assumptions made in Kimley-Horn's *Oak Ridge Development Traffic Impact Analysis (February 2020)*, which were calculated using the *Institute of Transportation Engineers (ITE) Trip Generation Manual, 10th Edition*. Results of the trip generation estimates, shown in **Table 8**, indicate the proposed development is expected to generate approximately 309 a.m. peak hour and 750 p.m. peak hour gross trips. Per Kimley-Horn's *Oak Ridge Development Traffic Impact Analysis (February 2020)* an anticipated 28 percent of trips would be pass-by-trips during the p.m. peak, while the a.m. peak would not include pass-by-trips as trips would be primarily workers and deliveries. Accounting for pass-by trips, the proposed development is expected to generate approximately 309 a.m. peak hour and 522 p.m. peak hour net new trips.

Table 8. Site Trip Generation

Land Use (ITE Code)	Size	AM Peak Hour			PM Peak Hour		
		Trips In	Trips Out	Total Trips	Trips In	Trips Out	Total Trips
Multifamily Housing (Mid-Rise) (221)	280 Units	26	75	101	38	24	62
General Office Building (710)	131,457 SF	125	15	140	14	99	113
Discount Club[1] (857)	161,000 SF	49	19	68	286	289	575
Total Site Generated Trips		**200**	**109**	**309**	**338**	**412**	**750**
Pass-By Trip Reduction (28% Pass-By Trips) PM Peak		*0*	*0*	*0*	*-114*	*-114*	*-228*
Total Net New Traffic		**200**	**109**	**309**	**224**	**298**	**522**

Source: Oak Ridge Development Traffic Impact Analysis, Kimley-Horn and Associates, Inc. (February 2020).

1: Discount Club raw trip generation data includes fueling positions.

The distribution of development generated trips was based on current traffic patterns in the area, as documented in Kimley-Horn's *Oak Ridge Development Traffic Impact Analysis (February 2020)*, which is included in **Appendix C**. This trip distribution (45 percent of trips to/from the north and 55 percent of trips to/from the south) was then applied to the estimated proposed development generated trips in the future conditions analysis.

3.2 Traffic Operations Analysis

To determine potential traffic impacts associated with the proposed development, future conditions at internal site intersections were evaluated using Synchro/SimTraffic software. Construction year 2022 was chosen to coincide with the anticipated opening of the proposed development. Detailed operations and queuing analysis results are presented in **Appendix B**.

Construction Year 2022 Build

Results of the construction year 2022 build traffic operations analysis, presented in **Table 9**, indicate that each study intersection would operate at overall LOS A or better during weekday peak hours once the development is complete. Eastbound right-turning motorists at TH 41 / Oakridge Drive would have difficulty finding acceptable gaps, resulting in moderate delay.

Table 9. Construction Year 2022 Build Operations Analysis Summary

Intersection	AM Peak Hour		PM Peak Hour	
	LOS	Delay (s)	LOS	Delay (s)
TH 41 & Peavey Road	A / A	2.8 / 6.3	A / A	3.9 / 6.4
TH 41 & Oakridge Drive	A / A	1.5 / 6.9	A / C	2.7 / 20.5
Oakridge Drive & North Access	A / A	0.8 / 1.3	A / A	2.6 / 2.8
Oakridge Drive & West Access	A / A	1.2 / 4.5	A / A	2.3 / 3.9
Oakridge Drive & South Access	A / A	2.3 / 4.2	A / A	1.3 / 3.7

Overall Intersection LOS / Worst Approach LOS
Overall Intersection Delay / Worst Approach Delay

Forecast Year 2032

Results of the forecast year 2032 traffic operations analysis, presented in **Table 10**, indicate that each study intersection would continue to operate at overall LOS A or better during weekday peak hours despite eastbound right-turning motorists at TH 41 / Oakridge Drive having difficulty finding acceptable gaps, resulting in significant delay.

Table 10. Forecast Year 2032 Operations Analysis Summary

Intersection	AM Peak Hour		PM Peak Hour	
	LOS	Delay (s)	LOS	Delay (s)
TH 41 & Peavey Road	A / A	3.3 / 8.0	A / B	5.2 / 10.9
TH 41 & Oakridge Drive	A / A	1.8 / 7.5	A / E	4.7 / 39.8
Oakridge Drive & North Access	A / A	0.9 / 1.3	A / A	2.6 / 2.8
Oakridge Drive & West Access	A / A	1.2 / 3.7	A / A	2.4 / 3.9
Oakridge Drive & South Access	A / A	2.4 / 4.2	A / A	1.3 / 3.7

Overall Intersection LOS / Worst Approach LOS
Overall Intersection Delay / Worst Approach Delay

Forecast Year 2042

Results of the forecast year 2042 traffic operations analysis, presented in **Table 11**, indicate that each study intersection would continue to operate at overall LOS B or better during weekday peak hours despite eastbound right-turning motorists at TH 41 / Peavey Road and TH 41 / Oakridge Drive having difficulty finding acceptable gaps, resulting in significant delay.

Table 11. Forecast Year 2042 Operations Analysis Summary

Intersection	AM Peak Hour		PM Peak Hour	
	LOS	Delay (s)	LOS	Delay (s)
TH 41 & Peavey Road	A / B	3.9 / 11.0	B / E	11.9 / 45.0
TH 41 & Oakridge Drive	A / A	2.2 / 7.4	B / F	11.0 / 135.4
Oakridge Drive & North Access	A / A	1.0 / 1.4	A / A	5.1 / 7.2
Oakridge Drive & West Access	A / A	1.2 / 3.5	A / A	2.4 / 4.5
Oakridge Drive & South Access	A / A	2.5 / 4.4	A / A	1.3 / 3.9

Overall Intersection LOS / Worst Approach LOS
Overall Intersection Delay / Worst Approach Delay

It should be noted that maximum queues for eastbound approaches at both TH 41 / Peavey Road (Oakridge Drive / North Access) and TH 41 / Oakridge Drive (Oakridge Drive / South Access) reach their respective adjacent intersections under p.m. peak hour traffic volumes, however, intersections queues dissipated within a short timeframe. To address increased delay and queuing along these eastbound approaches, resulting directly from high-volume conflicting movements preventing adequate gaps, a capacity expansion of the TH 41 corridor should be considered.

4.0 Site Plan / Access Review

A review of the proposed site plan was completed to identify any issues and recommend potential improvements regarding site ingress / egress, internal traffic circulation, and parking layout.

4.1 Site Ingress / Egress

Based on the planned location of associated land uses within the proposed development, motorists are expected to enter the site via both existing TH 41 intersections. Motorists destined to the discount club are more likely to utilize the northern intersection of TH 41 / Peavey Road, whereas motorists destined to multi-family housing are more likely to utilize the southern intersection of TH 41 / Oakridge Drive. Motorists destined for the general office building may utilize both intersections depending on their origin, the time of day, and/or the current traffic conditions.

With the recommend modification of TH 41 / Oakridge Drive to three-quarter access, per the recommendations included in *Kimley-Horn's Oak Ridge Development Traffic Impact Analysis (February 2020)*, site egress will be concentrated at the intersection of TH 41 / Peavey Road for motorists with a destination north along TH 41. Motorists leaving multi-family housing or the general office building with a destination south along TH 41 would still be able to utilize the right-out at TH 41 / Oakridge Drive, in addition to discount club motorists who wish to avoid the TH 41 / Peavey Road intersection.

4.2 Internal Traffic Circulation

The proposed internal roadways appear wide enough to adequately accommodate typical passenger vehicles. However, within each parking lot turning movements should be reviewed to ensure design vehicles such as garbage or delivery trucks have adequate accommodations to negotiate internal roadways. Internal intersections and associated lane configurations operate with acceptable levels of delay and queueing. Additional discussion related, specifically as it relates to lane configurations, is included below.

- **Oakridge Drive & North Access**: Proposed three-legged and side-street stop-controlled intersection with a dedicated westbound left-turn lane, a northbound left-turn lane, a northbound channelized right-turn lane, and a shared eastbound through / right-turn lane. Key conclusions include:
    - **Westbound**: The proposed dedicated left-turn lane is recommended to keep Oakridge Drive clear of turning vehicles, improving safety, and providing for more efficient operations. Additional signing for the eastbound approach may be needed as traffic volumes increase in the future to avoid eastbound peak hour queues from blocking westbound left-turns.
    - **Eastbound**: It is unlikely that there would be a significant number of eastbound right-turns, therefore the shared eastbound through / right-turn lane is adequate.

- **Oakridge Drive & West Access**: Proposed four-legged and side-street stop-controlled intersection with dedicated northbound and southbound left-turn lanes; this access also includes two westbound discount club exiting lanes. Key conclusions include:
    - **Northbound**: The proposed dedicated left-turn lane is recommended for safety due to the proximity of a horizontal curve less than 200 feet to the south. It would also provide for more efficient intersection operations.
- **Oakridge Drive & South Access**: Proposed three-legged and side-street stop-controlled intersection with no dedicated turn lanes. Key conclusions include:
    - **Westbound**: A dedicated left-turn lane is not needed based on peak hour traffic volumes, as entering volumes are relatively low and the restricted eastbound left-turn movement at TH 41 / Oakridge Drive reduces the volume for conflicting eastbound movements by requiring exiting development trips destined to the north to use the intersection of TH 41 / Peavey Road.

4.3 Parking Layout

A review of the proposed site plan was completed to identify any issues and recommend potential improvements regarding parking lots and the required number of parking stalls for each land use based on City of Chaska Zoning Ordinance Section 9. Overall the proposed parking layout appears to adequately serve the development site.

- **Multi-Family Housing**: The proposed development includes 280 units of multi-family housing, which would require two parking stalls per dwelling unit. The proposed site plan includes 576 stalls (out of 560 required) which is adequate.
- **General Office Building**: The proposed development would convert the hotel and conference center into a 131,000 square foot office building, which would require one parking stall for every 250 square feet of office space. The existing parking lot includes 306 stalls (out of 547 required based on 136,800 square feet), however, a three-story parking deck would increase that total to 566 stalls which would be adequate. A preliminary concept for the parking deck is included in **Appendix D**.
- **Discount Club**: The proposed development includes a 161,000 square foot discount club store (which includes a gas station with 24 fueling locations), which would require one stall for every 350 square feet of retail space. The proposed site plan includes 727 stalls (out of 470 required based on 164,545 square feet) in addition to another 52 stalls in an auxiliary parking lot which would be adequate.

5.0 Conclusions

The following traffic impact study conclusions are offered for consideration:

- Results of the existing traffic operations analysis indicate that both TH 41 study intersection currently operates at overall LOS A or better during the weekday peak hours.
- The proposed Oak Ridge Commons development would convert the existing hotel and conference center into a 131,000 square foot office building and build a 161,000 square foot discount club store (which includes a gas station with 24 fueling locations) and 280 units of multi-family housing. Access to the development is expected to be maintained at the TH 41 / Oakridge Drive intersection with primary access via TH 41 / Peavey Road.
    - The proposed development is expected to generate approximately 309 a.m. peak hour and 750 p.m. peak hour daily gross trips. Accounting for pass-by and diverted-link trips, the proposed development is expected to generate approximately 309 a.m. peak hour and 522 p.m. peak hour daily net new trips.
- A multi-lane roundabout with eastbound right-turn bypass is recommended at the intersection of TH 41 / Peavey Road to provide adequate operations into the future. A three-quarter access was recommended at the intersection of TH 41 / Oakridge Drive, initially by Kimley-Horn's *Oak Ridge Development Traffic Impact Analysis (February 2020)* and was further supported by the results of a subsequent intersection operations analysis.
    - Peak hour traffic volumes and operations should be monitored to ensure that the eastbound approaches of both the TH 41 / Peavey Road and TH 41 / Oakridge Drive intersections perform adequately beyond forecast year 2032, as significant queueing for these movements could impact intersections internal to the site. It should be noted that this queueing results directly from high-volume conflicting movements preventing adequate gaps. A capacity expansion of the TH 41 corridor should be considered, as additional lanes along TH 41 may be needed to increase gaps and improve eastbound operations. Detailed analysis and recommendations for the TH 41 intersections are summarized in the *TH 41 at Peavey Road Intersection Control Evaluation (August 2021).*
- Results of forecast year traffic operations analysis indicate that all study intersections are expected to operate at overall LOS B or better during the weekday peak hours.
    - Background traffic growth and development trips are expected to have a negligible impact on intersections internal to the site. No other significant delay or queuing issues were observed in the traffic simulations related to those intersections.
- Generally, the proposed development is expected to have minimal impact on internal site area traffic operations. Therefore, no geometric or traffic control improvements to the proposed site plan are required from an operations perspective.

Appendix A:

Detailed Peak Hour Traffic Volumes

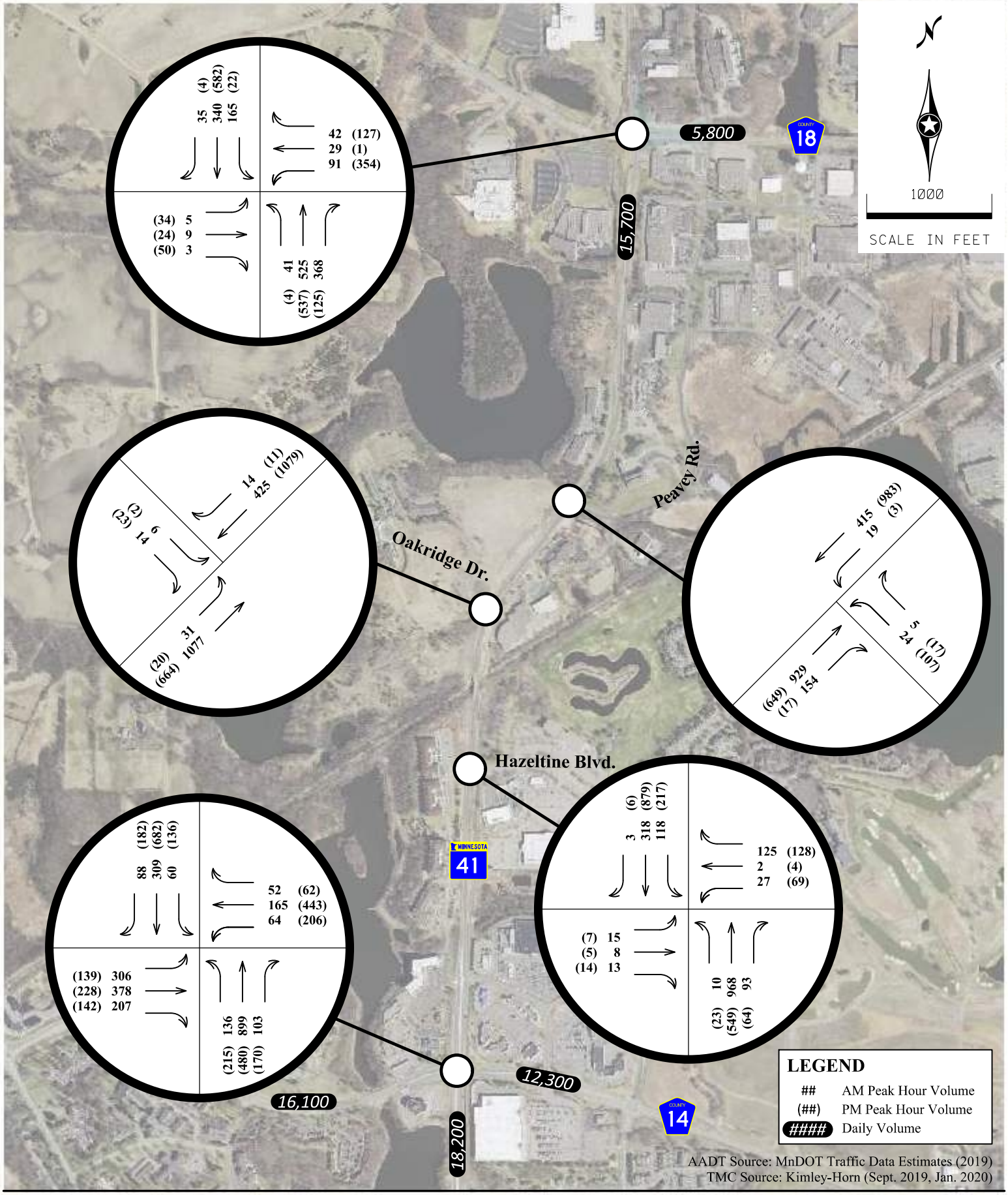

TH 41 & Peavey Road ICE

Figure 5
Existing 2019 Traffic Volumes

ALLIANT

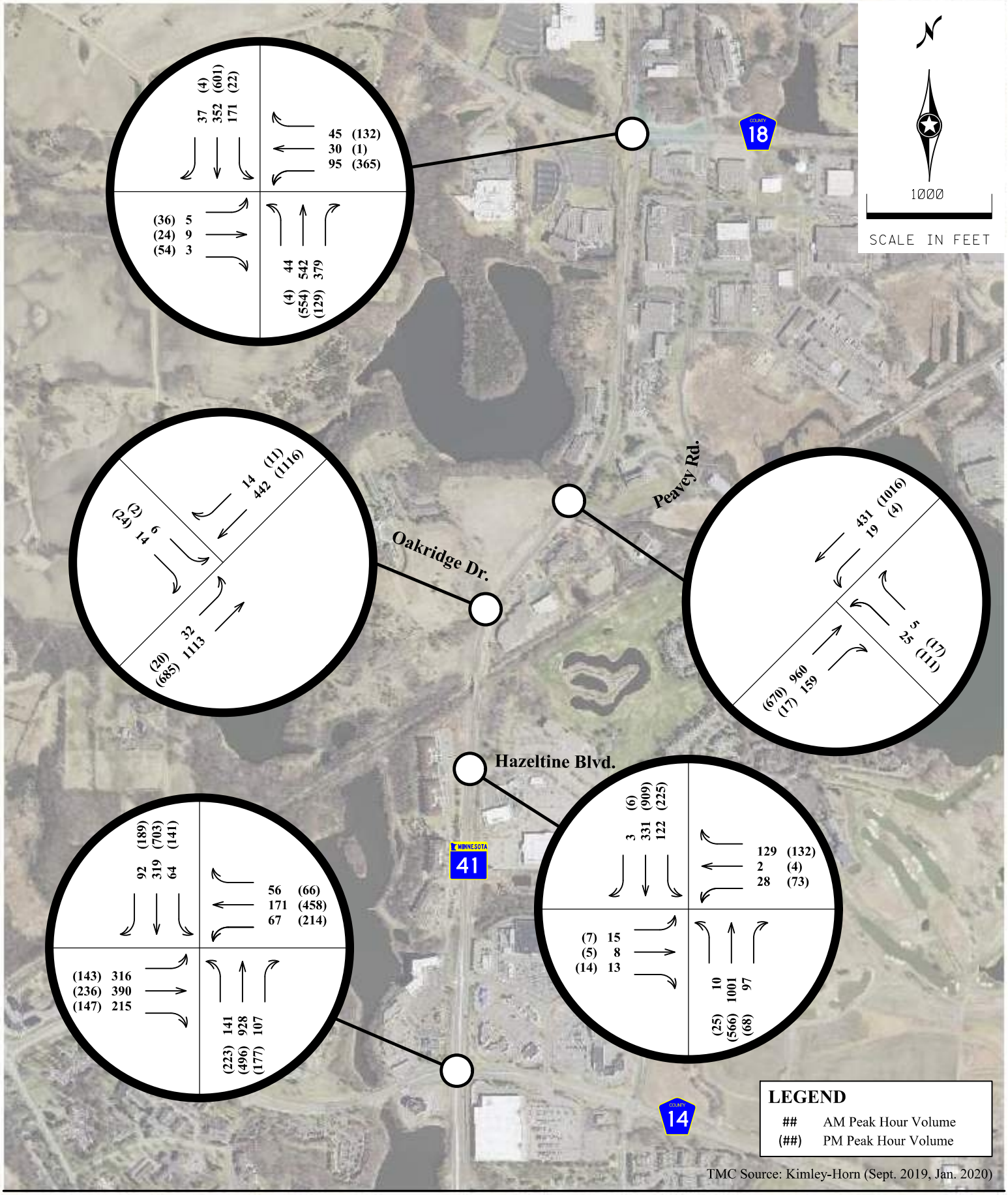

TMC Source: Kimley-Horn (Sept. 2019, Jan. 2020)

TH 41 & Peavey Road ICE

Figure 6
Construction Year 2022 (No-Build) Traffic Volumes

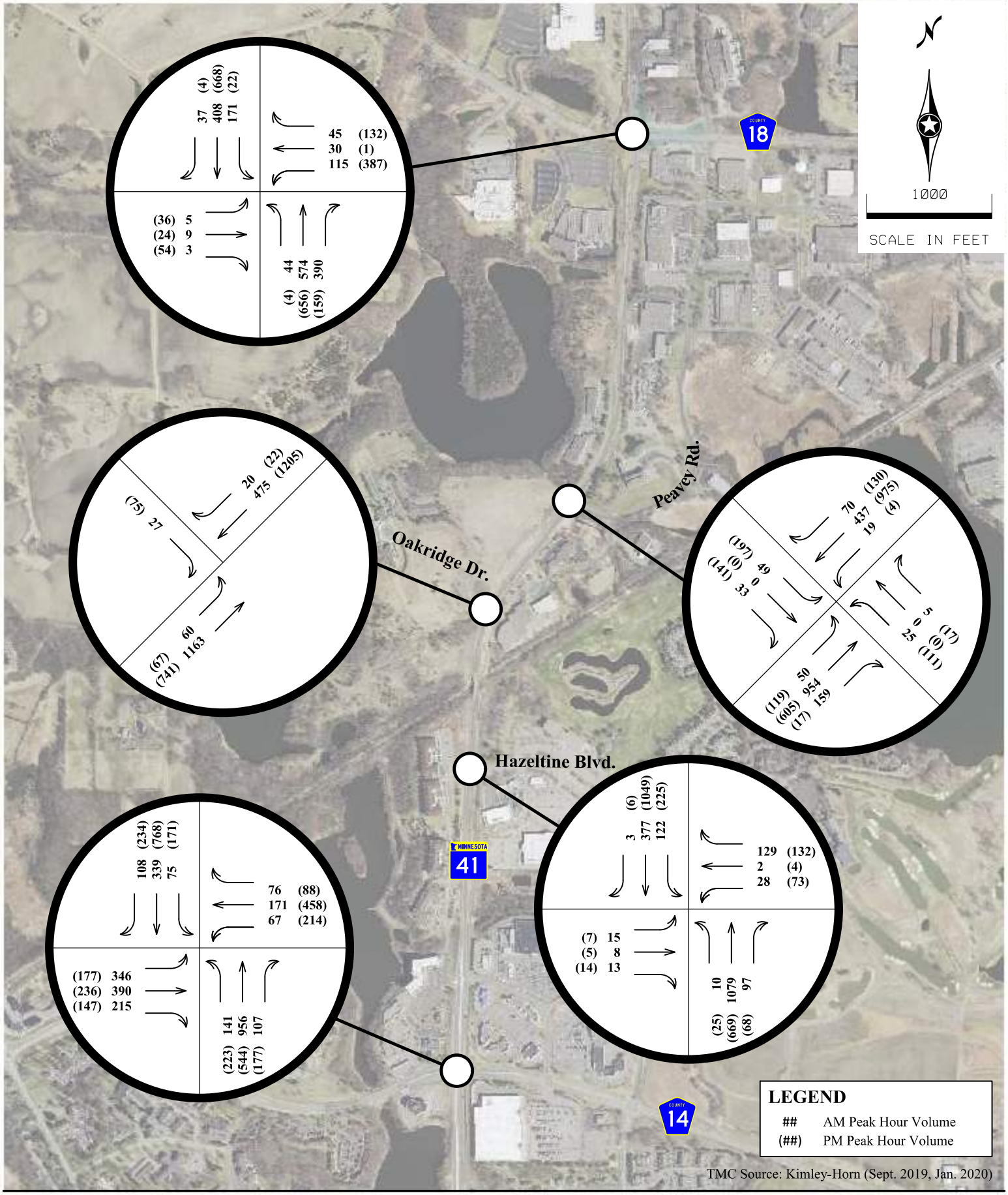

TMC Source: Kimley-Horn (Sept. 2019, Jan. 2020)

TH 41 & Peavey Road ICE

Figure 7
Construction Year 2022 (Build) Traffic Volumes

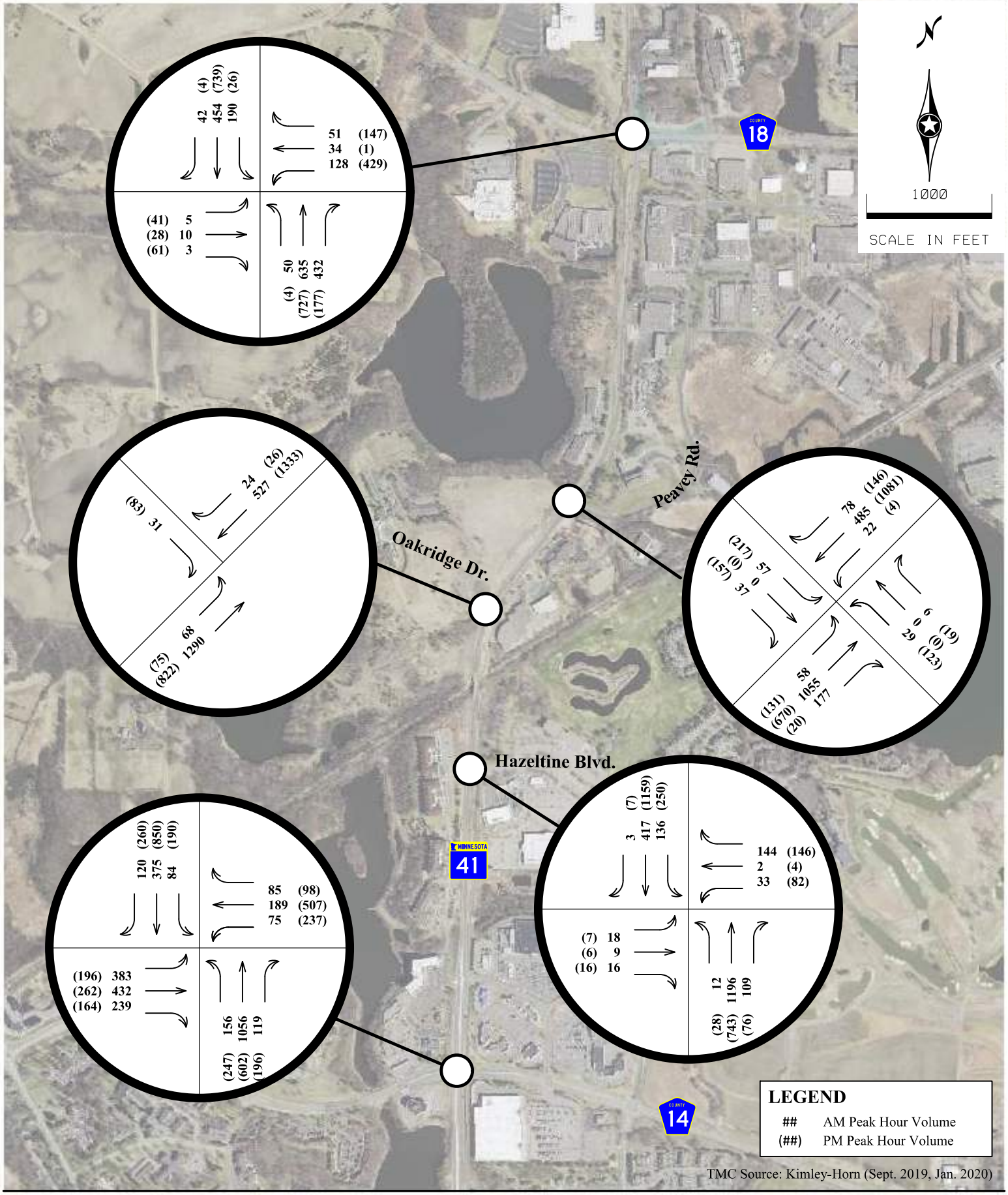

TMC Source: Kimley-Horn (Sept. 2019, Jan. 2020)

TH 41 & Peavey Road ICE

Figure 8
Forecast 2032 Traffic Volumes

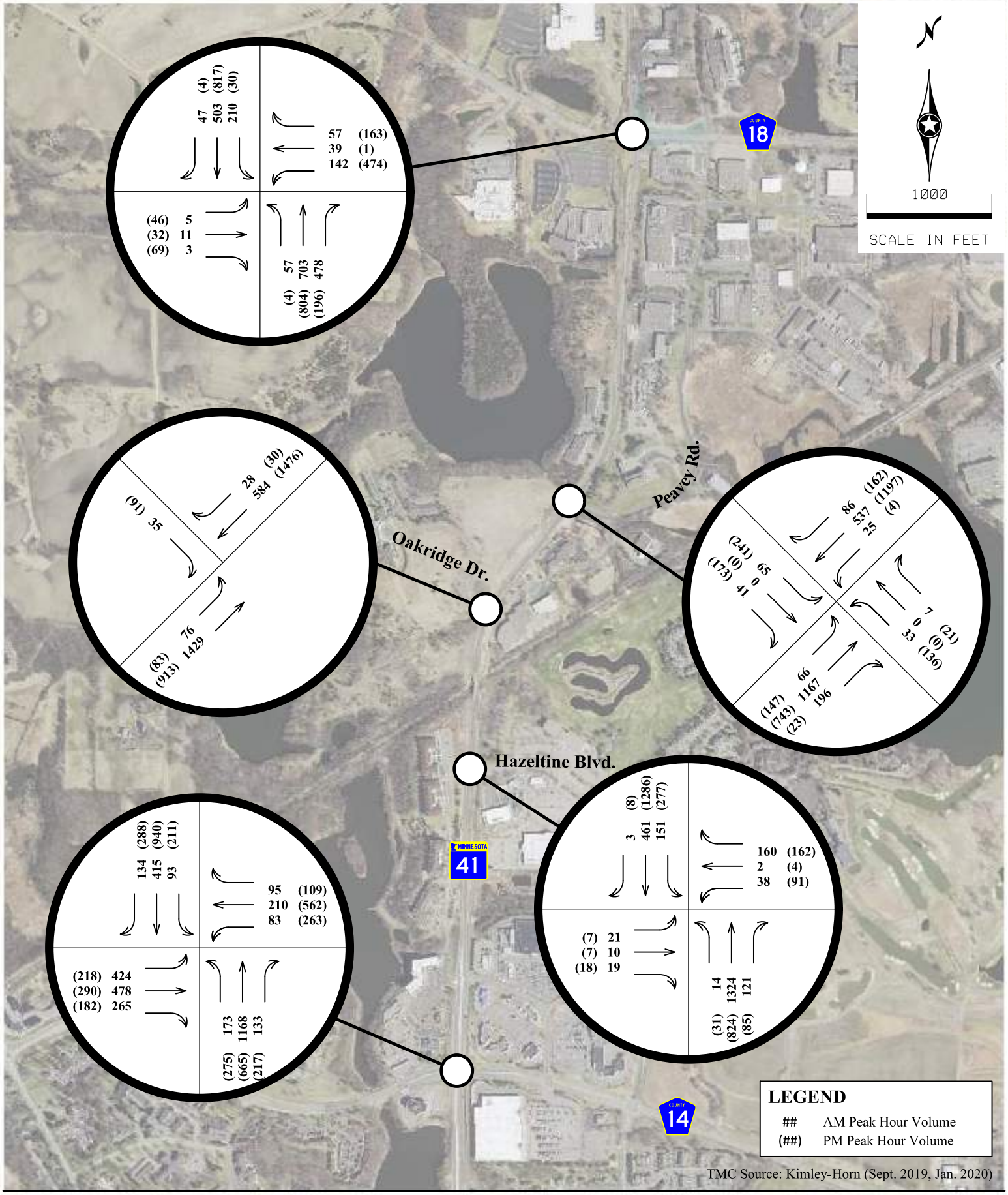

TMC Source: Kimley-Horn (Sept. 2019, Jan. 2020)

TH 41 & Peavey Road ICE

Figure 9
Forecast 2042 Traffic Volumes

Appendix B:

Detailed Intersection Operations Analysis

Oak Ridge Development - VISSIM Analysis - 2019 Existing Delay & LOS

Intersection	Approach or Movement	AM Peak Hour										PM Peak Hour									
		EB		WB		NB		SB		Intersection		EB		WB		NB		SB		Intersection	
		Delay (s/v)	LOS	Delay (s/v)	LOS	Delay (s/v)	LOS	Delay (s/v)	LOS	Delay (s/v)	LOS	Delay (s/v)	LOS	Delay (s/v)	LOS	Delay (s/v)	LOS	Delay (s/v)	LOS	Delay (s/v)	LOS
TH 41 & Lyman Blvd	Approach	2.0	A	3.5	A	3.4	A	2.3	A	3.0	A	9.1	A	5.4	A	2.7	A	4.7	A	4.4	A
	Left	1.9	A	3.5	A	3.1	A	2.4	A			6.0	A	5.0	A	2.8	A	4.3	A		
	Through	1.9	A	2.8	A	3.3	A	2.3	A			6.2	A	2.4	A	2.9	A	4.8	A		
	Right	2.3	A	4.1	A	3.5	A	1.6	A			12.4	B	6.3	A	2.1	A	1.7	A		
TH 41 & Peavey Rd	Approach	-	-	15.7	C	0.8	A	1.0	A	1.1	A	-	-	***63.0***	F	0.3	A	1.1	A	5.1	A
	Left	-	-	16.4	C	-	-	11.6	B			-	-	***64.6***	F	-	-	6.2	A		
	Through	-	-	-	-	0.7	A	0.5	A			-	-	-	-	0.3	A	1.1	A		
	Right	-	-	12.3	B	1.7	A	0.0	A			-	-	***52.1***	F	0.8	A	0.0	A		
TH 41 & Oak Ridge Dr	Approach	11.5	B	-	-	1.4	A	0.2	A	1.2	A	12.8	B	-	-	1.1	A	0.6	A	1.0	A
	Left	22.1	C	-	-	3.9	A	-	-			22.7	C	-	-	10.9	B	-	-		
	Through	-	-	-	-	1.4	A	0.2	A			-	-	-	-	0.8	A	0.6	A		
	Right	6.9	A	-	-	-	-	0.8	A			12.4	B	-	-	-	-	1.1	A		
TH 41 & Hazeltine Blvd	Approach	42.8	D	24.4	C	6.7	A	6.6	A	9.1	A	34.0	C	30.4	C	6.5	A	5.4	A	8.7	A
	Left	61.4	E	71.1	E	5.9	A	18.0	B			55.6	E	70.5	E	11.3	B	9.3	A		
	Through	72.2	E	63.3	E	7.0	A	2.2	A			69.5	E	55.5	E	6.6	A	4.5	A		
	Right	5.4	A	14.1	B	3.5	A	1.7	A			7.1	A	8.5	A	3.4	A	1.7	A		

Oak Ridge Development - VISSIM Analysis - 2022 No Build Delay & LOS

Intersection	Approach or Movement	AM Peak Hour										PM Peak Hour									
		EB		WB		NB		SB		Intersection		EB		WB		NB		SB		Intersection	
		Delay (s/v)	LOS	Delay (s/v)	LOS	Delay (s/v)	LOS	Delay (s/v)	LOS	Delay (s/v)	LOS	Delay (s/v)	LOS	Delay (s/v)	LOS	Delay (s/v)	LOS	Delay (s/v)	LOS	Delay (s/v)	LOS
TH 41 & Lyman Blvd	Approach	2.4	A	3.9	A	3.5	A	2.4	A	3.2	A	12.4	B	5.8	A	2.8	A	5.3	A	5.0	A
	Left	1.6	A	3.6	A	3.3	A	2.5	A			8.8	A	5.7	A	2.5	A	5.2	A		
	Through	2.2	A	3.6	A	3.4	A	2.5	A			8.0	A	2.8	A	3.0	A	5.3	A		
	Right	3.2	A	4.7	A	3.6	A	1.6	A			16.4	C	6.3	A	2.1	A	2.2	A		
TH 41 & Peavey Rd	Approach	-	-	17.5	C	1.0	A	1.0	A	1.3	A	-	-	***84.0***	F	0.3	A	1.2	A	6.4	A
	Left	-	-	18.7	C	-	-	11.7	B			-	-	***85.5***	F	-	-	5.2	A		
	Through	-	-	-	-	0.8	A	0.5	A			-	-	-	-	0.3	A	1.2	A		
	Right	-	-	11.9	B	1.8	A	0.0	A			-	-	***72.6***	F	0.9	A	0.0	A		
TH 41 & Oak Ridge Dr	Approach	11.8	B	-	-	1.6	A	0.2	A	1.3	A	14.0	B	-	-	1.2	A	0.7	A	1.1	A
	Left	23.2	C	-	-	4.4	A	-	-			26.1	D	-	-	12.7	B	-	-		
	Through	-	-	-	-	1.5	A	0.2	A			-	-	-	-	0.9	A	0.7	A		
	Right	7.0	A	-	-	-	-	0.8	A			13.5	B	-	-	-	-	1.1	A		
TH 41 & Hazeltine Blvd	Approach	42.9	D	26.0	C	7.6	A	7.0	A	9.8	A	33.2	C	30.8	C	6.9	A	6.0	A	9.1	A
	Left	61.3	E	73.8	E	5.9	A	18.8	B			54.0	D	68.6	E	13.8	B	9.5	A		
	Through	72.3	E	57.1	E	8.0	A	2.4	A			68.1	E	67.7	E	7.0	A	5.2	A		
	Right	5.7	A	15.3	B	4.3	A	1.3	A			7.1	A	9.1	A	3.5	A	2.3	A		

Oak Ridge Development - VISSIM Analysis - 2022 Build - Roundabout Option Delay & LOS

Intersection	Approach or Movement	AM Peak Hour										PM Peak Hour									
		EB		WB		NB		SB		Intersection		EB		WB		NB		SB		Intersection	
		Delay (s/v)	LOS	Delay (s/v)	LOS	Delay (s/v)	LOS	Delay (s/v)	LOS	Delay (s/v)	LOS	Delay (s/v)	LOS	Delay (s/v)	LOS	Delay (s/v)	LOS	Delay (s/v)	LOS	Delay (s/v)	LOS
TH 41 & Lyman Blvd	Approach	2.8	A	4.0	A	4.1	A	2.7	A	3.6	A	14.1	B	7.5	A	3.2	A	6.1	A	5.7	A
	Left	2.0	A	3.7	A	3.9	A	2.8	A			8.8	A	7.1	A	4.2	A	5.3	A		
	Through	2.9	A	3.5	A	4.0	A	2.7	A			8.3	A	5.7	A	3.3	A	6.1	A		
	Right	3.2	A	4.9	A	4.3	A	1.8	A			19.9	C	8.5	A	2.5	A	1.5	A		
TH 41 & Peavey Rd	Approach	1.4	A	6.3	A	3.3	A	1.9	A	2.8	A	6.3	A	6.4	A	2.7	A	3.6	A	3.9	A
	Left	1.9	A	6.1	A	3.7	A	2.0	A			10.1	B	6.4	A	3.2	A	4.0	A		
	Through	0.0	A	0.0	A	3.4	A	1.9	A			0.0	A	0.0	A	2.6	A	3.7	A		
	Right	0.5	A	7.4	A	2.5	A	1.6	A			1.2	A	6.3	A	1.5	A	2.7	A		
TH 41 & Oak Ridge Dr	Approach	6.9	A	-	-	1.8	A	0.4	A	1.5	A	20.5	C	-	-	2.9	A	1.5	A	2.7	A
	Left	0.0	A	-	-	4.9	A	-	-			0.0	A	-	-	21.9	C	-	-		
	Through	-	-	-	-	1.7	A	0.4	A			-	-	-	-	1.1	A	1.5	A		
	Right	6.9	A	-	-	-	-	1.0	A			20.5	C	-	-	-	-	1.8	A		
TH 41 & Hazeltine Blvd	Approach	45.9	D	27.1	C	8.7	A	7.0	A	10.5	B	36.7	D	31.4	C	6.6	A	6.8	A	9.4	A
	Left	65.7	E	72.4	E	6.2	A	20.3	C			59.4	E	68.8	E	17.8	B	11.8	B		
	Through	75.0	E	76.1	E	9.1	A	2.5	A			71.6	E	72.8	E	6.6	A	5.9	A		
	Right	5.8	A	16.9	B	5.0	A	1.4	A			9.4	A	9.9	A	2.4	A	2.4	A		

2022 Build - AM Peak Hour

Intersection	MOE	Eastbound Approach			Westbound Approach			Northbound Approach			Southbound Approach			Intersection Total
		EBL	EBT	EBR	WBL	WBT	WBR	NBL	NBT	NBR	SBL	SBT	SBR	
Oakridge Drive & South Access	Movement Delay (sec/veh)	0.0	0.4	0.7	1.6	0.4	0.0	4.7	0.0	2.9	0.0	0.0	0.0	2.3
	Total Delay (hr)	0.0	0.0	0.0	0.0	0.0	0.0	0.1	0.0	0.0	0.0	0.0	0.0	0.1
	Movement LOS	A	A	A	A	A	A	A	A	A	A	A	A	A
	Movement Volume	0	7	1	25	57	0	52	0	19	0	0	0	161
	Movement 95th Queue (ft)	0	0	0	0	0	0	51	0	51	0	0	0	
	Storage Bay Distance (ft)	0	0	0	0	0	0	0	0	0	0	0	0	
	Approach Delay (sec/veh)	0.4			0.8			4.2			0.0			
	Approach LOS	A			A			A			A			

Intersection	MOE	Eastbound Approach			Westbound Approach			Northbound Approach			Southbound Approach			Intersection Total
		EBL	EBT	EBR	WBL	WBT	WBR	NBL	NBT	NBR	SBL	SBT	SBR	
Peavey Road & West Access	Movement Delay (sec/veh)	2.4	0.4	0.0	0.8	0.0	0.2	4.8	0.0	3.8	5.1	0.0	2.7	1.2
	Total Delay (hr)	0.0	0.0	0.0	0.0	0.0	0.0	0.0	0.0	0.0	0.0	0.0	0.0	0.0
	Movement LOS	A	A	A	A	A	A	A	A	A	A	A	A	A
	Movement Volume	49	59	0	1	0	66	2	0	1	8	0	6	192
	Movement 95th Queue (ft)	18	0	0	0	2	2	13	13	11	34	34	34	
	Storage Bay Distance (ft)	50	0	0	0	0	0	0	0	0	0	0	0	
	Approach Delay (sec/veh)	1.3			0.2			4.5			4.1			
	Approach LOS	A			A			A			A			

Intersection	MOE	Eastbound Approach			Westbound Approach			Northbound Approach			Southbound Approach			Intersection Total
		EBL	EBT	EBR	WBL	WBT	WBR	NBL	NBT	NBR	SBL	SBT	SBR	
Peavey Road & North Access	Movement Delay (sec/veh)	0.0	0.2	0.1	2.3	0.2	0.0	0.0	0.0	1.3	0.0	0.0	0.0	0.8
	Total Delay (hr)	0.0	0.0	0.0	0.0	0.0	0.0	0.0	0.0	0.0	0.0	0.0	0.0	0.0
	Movement LOS	A	A	A	A	A	A	A	A	A	A	A	A	A
	Movement Volume	0	68	1	47	66	0	0	0	16	0	0	0	198
	Movement 95th Queue (ft)	0	0	0	27	0	0	6	0	0	0	0	0	
	Storage Bay Distance (ft)	0	0	0	150	0	0	0	0	0	0	0	0	
	Approach Delay (sec/veh)	0.2			1.1			1.3			0.0			
	Approach LOS	A			A			A			A			

2022 Build - PM Peak Hour

Intersection	MOE	Eastbound Approach			Westbound Approach			Northbound Approach			Southbound Approach			Intersection Total
		EBL	EBT	EBR	WBL	WBT	WBR	NBL	NBT	NBR	SBL	SBT	SBR	
Oakridge Drive & South Access	Movement Delay (sec/veh)	0.0	0.4	0.3	2.1	0.6	0.0	5.0	0.0	2.7	0.0	0.0	0.0	1.3
	Total Delay (hr)	0.0	0.0	0.0	0.0	0.0	0.0	0.0	0.0	0.0	0.0	0.0	0.0	0.0
	Movement LOS	A	A	A	A	A	A	A	A	A	A	A	A	A
	Movement Volume	0	62	1	37	52	0	10	0	13	0	0	0	175
	Movement 95th Queue (ft)	0	0	0	17	17	0	40	0	40	0	0	0	
	Storage Bay Distance (ft)	0	0	0	0	0	0	0	0	0	0	0	0	
	Approach Delay (sec/veh)	0.4			1.2			3.7			0.0			
	Approach LOS	A			A			A			A			

Intersection	MOE	Eastbound Approach			Westbound Approach			Northbound Approach			Southbound Approach			Intersection Total
		EBL	EBT	EBR	WBL	WBT	WBR	NBL	NBT	NBR	SBL	SBT	SBR	
Peavey Road & West Access	Movement Delay (sec/veh)	1.5	0.7	0.2	1.5	0.0	0.1	3.9	0.0	0.0	4.5	0.0	2.9	2.3
	Total Delay (hr)	0.0	0.0	0.0	0.0	0.0	0.0	0.0	0.0	0.0	0.1	0.0	0.0	0.1
	Movement LOS	A	A	A	A	A	A	A	A	A	A	A	A	A
	Movement Volume	5	12	44	1	0	8	8	0	0	42	0	55	175
	Movement 95th Queue (ft)	0	0	0	0	0	0	26	26	6	50	50	50	
	Storage Bay Distance (ft)	0	0	0	0	0	0	0	0	0	0	0	0	
	Approach Delay (sec/veh)	0.4			0.3			3.9			3.6			
	Approach LOS	A			A			A			A			

Intersection	MOE	Eastbound Approach			Westbound Approach			Northbound Approach			Southbound Approach			Intersection Total
		EBL	EBT	EBR	WBL	WBT	WBR	NBL	NBT	NBR	SBL	SBT	SBR	
Peavey Road & North Access	Movement Delay (sec/veh)	0.0	0.8	0.6	2.9	0.6	0.0	5.9	0.0	2.7	0.0	0.0	0.0	2.6
	Total Delay (hr)	0.0	0.0	0.0	0.2	0.0	0.0	0.0	0.0	0.2	0.0	0.0	0.0	0.4
	Movement LOS	A	A	A	A	A	A	A	A	A	A	A	A	A
	Movement Volume	0	52	2	233	8	0	1	0	282	0	0	0	578
	Movement 95th Queue (ft)	0	0	0	46	0	0	10	0	22	0	0	0	
	Storage Bay Distance (ft)	0	0	0	150	0	0	0	0	0	0	0	0	
	Approach Delay (sec/veh)	0.8			2.8			2.7			0.0			
	Approach LOS	A			A			A			A			

Oak Ridge Development - VISSIM Analysis - 2032 Build Delay & LOS

Intersection	Approach or Movement	AM Peak Hour										PM Peak Hour									
		EB		WB		NB		SB		Intersection		EB		WB		NB		SB		Intersection	
		Delay (s/v)	LOS	Delay (s/v)	LOS	Delay (s/v)	LOS	Delay (s/v)	LOS	Delay (s/v)	LOS	Delay (s/v)	LOS	Delay (s/v)	LOS	Delay (s/v)	LOS	Delay (s/v)	LOS	Delay (s/v)	LOS
TH 41 & Lyman Blvd	Approach	3.6	A	4.9	A	4.7	A	3.2	A	4.2	A	33.9	D	12.4	B	3.8	A	10.1	B	9.6	A
	Left	2.9	A	4.6	A	4.5	A	3.3	A			19.7	C	12.4	B	3.3	A	9.7	A		
	Through	2.5	A	3.8	A	4.6	A	3.3	A			16.8	C	9.4	A	4.1	A	10.2	B		
	Right	5.0	A	6.3	A	4.9	A	1.9	A			49.2	E	12.3	B	2.9	A	3.0	A		
TH 41 & Peavey Rd	Approach	1.6	A	8.0	A	3.9	A	1.9	A	3.3	A	9.6	A	10.9	B	3.4	A	4.3	A	5.2	A
	Left	2.3	A	8.0	A	4.1	A	2.1	A			15.7	C	11.1	B	3.9	A	5.6	A		
	Through	0.0	A	0.0	A	4.1	A	2.0	A			0.0	A	0.0	A	3.4	A	4.5	A		
	Right	0.6	A	7.7	A	3.1	A	1.7	A			1.5	A	9.5	A	1.7	A	2.8	A		
TH 41 & Oak Ridge Dr	Approach	7.5	A	-	-	2.2	A	0.5	A	1.8	A	39.8	E	-	-	4.6	A	2.7	A	4.7	A
	Left	0.0	A	-	-	5.6	A	-	-			0.0	A	-	-	37.2	E	-	-		
	Through	-	-	-	-	2.0	A	0.5	A			-	-	-	-	1.5	A	2.7	A		
	Right	7.5	A	-	-	-	-	0.9	A			39.8	E	-	-	-	-	2.2	A		
TH 41 & Hazeltine Blvd	Approach	45.8	D	32.3	C	15.5	B	10.8	B	16.3	B	36.1	D	32.0	C	9.1	A	10.0	A	12.0	B
	Left	65.2	E	71.5	E	11.7	B	34.1	C			64.4	E	67.4	E	26.5	C	17.7	B		
	Through	71.4	E	61.6	E	16.1	B	3.0	A			55.4	E	73.7	E	9.1	A	8.3	A		
	Right	5.9	A	23.4	C	10.3	B	1.5	A			9.6	A	11.4	B	2.9	A	5.6	A		

2032 Build - AM Peak Hour

Intersection	MOE	Eastbound Approach			Westbound Approach			Northbound Approach			Southbound Approach			Intersection Total
		EBL	EBT	EBR	WBL	WBT	WBR	NBL	NBT	NBR	SBL	SBT	SBR	
Oakridge Drive & South Access	Movement Delay (sec/veh)	0.0	0.3	0.3	1.7	0.5	0.0	4.7	0.0	3.0	0.0	0.0	0.0	2.4
	Total Delay (hr)	0.0	0.0	0.0	0.0	0.0	0.0	0.1	0.0	0.0	0.0	0.0	0.0	0.1
	Movement LOS	A	A	A	A	A	A	A	A	A	A	A	A	A
	Movement Volume	0	8	1	26	63	0	59	0	25	0	0	0	182
	Movement 95th Queue (ft)	0	0	0	8	8	0	57	0	57	0	0	0	
	Storage Bay Distance (ft)	0	0	0	0	0	0	0	0	0	0	0	0	
	Approach Delay (sec/veh)	0.3			0.9			4.2			0.0			
	Approach LOS	A			A			A			A			

Intersection	MOE	Eastbound Approach			Westbound Approach			Northbound Approach			Southbound Approach			Intersection Total
		EBL	EBT	EBR	WBL	WBT	WBR	NBL	NBT	NBR	SBL	SBT	SBR	
Peavey Road & West Access	Movement Delay (sec/veh)	2.5	0.5	0.0	2.5	0.0	0.2	5.9	0.0	1.4	4.7	0.0	2.3	1.2
	Total Delay (hr)	0.0	0.0	0.0	0.0	0.0	0.0	0.0	0.0	0.0	0.0	0.0	0.0	0.0
	Movement LOS	A	A	A	A	A	A	A	A	A	A	A	A	A
	Movement Volume	56	64	0	1	0	70	1	0	1	7	0	8	208
	Movement 95th Queue (ft)	22	0	0	0	0	0	9	9	8	35	35	35	
	Storage Bay Distance (ft)	50	0	0	0	0	0	0	0	0	0	0	0	
	Approach Delay (sec/veh)	1.4			0.2			3.7			3.4			
	Approach LOS	A			A			A			A			

Intersection	MOE	Eastbound Approach			Westbound Approach			Northbound Approach			Southbound Approach			Intersection Total
		EBL	EBT	EBR	WBL	WBT	WBR	NBL	NBT	NBR	SBL	SBT	SBR	
Peavey Road & North Access	Movement Delay (sec/veh)	0.0	0.2	0.2	2.3	0.3	0.0	4.2	0.0	1.2	0.0	0.0	0.0	0.9
	Total Delay (hr)	0.0	0.0	0.0	0.0	0.0	0.0	0.0	0.0	0.0	0.0	0.0	0.0	0.0
	Movement LOS	A	A	A	A	A	A	A	A	A	A	A	A	A
	Movement Volume	0	71	2	65	72	0	1	0	20	0	0	0	231
	Movement 95th Queue (ft)	0	0	0	23	0	0	8	0	0	0	0	0	
	Storage Bay Distance (ft)	0	0	0	150	0	0	0	0	0	0	0	0	
	Approach Delay (sec/veh)	0.2			1.2			1.3			0.0			
	Approach LOS	A			A			A			A			

2032 Build - PM Peak Hour

Intersection	MOE	Eastbound Approach			Westbound Approach			Northbound Approach			Southbound Approach			Intersection Total
		EBL	EBT	EBR	WBL	WBT	WBR	NBL	NBT	NBR	SBL	SBT	SBR	
Oakridge Drive & South Access	Movement Delay (sec/veh)	0.0	0.4	0.3	2.1	0.8	0.0	4.9	0.0	2.9	0.0	0.0	0.0	1.3
	Total Delay (hr)	0.0	0.0	0.0	0.0	0.0	0.0	0.0	0.0	0.0	0.0	0.0	0.0	0.0
	Movement LOS	A	A	A	A	A	A	A	A	A	A	A	A	A
	Movement Volume	0	72	1	45	61	0	11	0	18	0	0	0	208
	Movement 95th Queue (ft)	0	0	0	23	23	0	43	0	43	0	0	0	
	Storage Bay Distance (ft)	0	0	0	0	0	0	0	0	0	0	0	0	
	Approach Delay (sec/veh)	0.4			1.4			3.7			0.0			
	Approach LOS	A			A			A			A			

Intersection	MOE	Eastbound Approach			Westbound Approach			Northbound Approach			Southbound Approach			Intersection Total
		EBL	EBT	EBR	WBL	WBT	WBR	NBL	NBT	NBR	SBL	SBT	SBR	
Peavey Road & West Access	Movement Delay (sec/veh)	2.0	0.6	0.4	1.3	0.0	0.0	4.1	0.0	2.1	4.5	0.0	3.0	2.4
	Total Delay (hr)	0.0	0.0	0.0	0.0	0.0	0.0	0.0	0.0	0.0	0.1	0.0	0.1	0.2
	Movement LOS	A	A	A	A	A	A	A	A	A	A	A	A	A
	Movement Volume	7	10	54	1	0	8	11	0	1	45	0	63	200
	Movement 95th Queue (ft)	0	0	0	0	0	0	32	32	8	54	54	54	
	Storage Bay Distance (ft)	0	0	0	0	0	0	0	0	0	0	0	0	
	Approach Delay (sec/veh)	0.6			0.1			3.9			3.6			
	Approach LOS	A			A			A			A			

Intersection	MOE	Eastbound Approach			Westbound Approach			Northbound Approach			Southbound Approach			Intersection Total
		EBL	EBT	EBR	WBL	WBT	WBR	NBL	NBT	NBR	SBL	SBT	SBR	
Peavey Road & North Access	Movement Delay (sec/veh)	0.0	0.8	0.5	2.9	0.7	0.0	0.0	0.0	2.7	0.0	0.0	0.0	2.6
	Total Delay (hr)	0.0	0.0	0.0	0.2	0.0	0.0	0.0	0.0	0.2	0.0	0.0	0.0	0.4
	Movement LOS	A	A	A	A	A	A	A	A	A	A	A	A	A
	Movement Volume	0	55	1	264	10	0	0	0	316	0	0	0	646
	Movement 95th Queue (ft)	0	0	0	41	0	0	9	0	22	0	0	0	
	Storage Bay Distance (ft)	0	0	0	150	0	0	0	0	0	0	0	0	
	Approach Delay (sec/veh)	0.8			2.8			2.7			0.0			
	Approach LOS	A			A			A			A			

Oak Ridge Development - VISSIM Analysis - 2042 Build Delay & LOS

Intersection	Approach or Movement	AM Peak Hour										PM Peak Hour									
		EB		WB		NB		SB		Intersection		EB		WB		NB		SB		Intersection	
		Delay (s/v)	LOS	Delay (s/v)	LOS	Delay (s/v)	LOS	Delay (s/v)	LOS	Delay (s/v)	LOS	Delay (s/v)	LOS	Delay (s/v)	LOS	Delay (s/v)	LOS	Delay (s/v)	LOS	Delay (s/v)	LOS
TH 41 & Lyman Blvd	Approach	4.2	A	5.5	A	5.1	A	3.9	A	4.7	A	***113.4***	F	21.3	C	5.0	A	21.6	C	20.5	C
	Left	3.6	A	5.1	A	4.9	A	4.1	A			48.5	E	22.6	C	6.1	A	21.5	C		
	Through	3.4	A	5.2	A	5.0	A	4.0	A			39.6	E	9.9	A	5.4	A	21.7	C		
	Right	5.4	A	6.5	A	5.3	A	2.1	A			***185.5***	F	17.6	C	3.6	A	8.2	A		
TH 41 & Peavey Rd	Approach	1.8	A	11.0	B	4.6	A	2.2	A	3.9	A	45.0	E	18.4	C	4.0	A	7.0	A	11.9	B
	Left	2.6	A	10.2	B	4.9	A	2.6	A			***61.6***	F	18.7	C	5.0	A	8.2	A		
	Through	0.0	A	0.0	A	4.8	A	2.2	A			0.0	A	0.0	A	3.8	A	7.5	A		
	Right	0.6	A	13.2	B	3.6	A	1.9	A			22.9	C	15.8	C	2.0	A	3.3	A		
TH 41 & Oak Ridge Dr	Approach	7.4	A	-	-	2.8	A	0.6	A	2.2	A	***135.4***	F	-	-	7.5	A	6.7	A	11.0	B
	Left	0.0	A	-	-	6.6	A	-	-			0.0	A	-	-	***63.9***	F	-	-		
	Through	-	-	-	-	2.6	A	0.6	A			-	-	-	-	2.2	A	6.8	A		
	Right	7.4	A	-	-	-	-	1.1	A			***135.4***	F	-	-	-	-	4.7	A		
TH 41 & Hazeltine Blvd	Approach	46.0	D	39.1	D	41.8	D	13.9	B	34.1	C	33.8	C	34.9	C	11.2	B	15.2	B	15.9	B
	Left	70.2	E	67.4	E	42.5	D	46.8	D			58.4	E	69.0	E	31.1	C	27.1	C		
	Through	69.6	E	72.4	E	42.5	D	3.1	A			61.6	E	65.1	E	11.2	B	12.7	B		
	Right	5.9	A	32.6	C	34.3	C	1.1	A			11.0	B	16.1	B	3.8	A	9.0	A		

2042 Build - AM Peak Hour

Intersection	MOE	Eastbound Approach			Westbound Approach			Northbound Approach			Southbound Approach			Intersection Total
		EBL	EBT	EBR	WBL	WBT	WBR	NBL	NBT	NBR	SBL	SBT	SBR	
Oakridge Drive & South Access	Movement Delay (sec/veh)	0.0	0.3	0.6	1.7	0.5	0.0	4.8	0.0	3.2	0.0	0.0	0.0	2.5
	Total Delay (hr)	0.0	0.0	0.0	0.0	0.0	0.0	0.1	0.0	0.0	0.0	0.0	0.0	0.1
	Movement LOS	A	A	A	A	A	A	A	A	A	A	A	A	A
	Movement Volume	0	8	1	30	75	0	74	0	23	0	0	0	211
	Movement 95th Queue (ft)	0	0	0	5	5	0	53	0	53	0	0	0	
	Storage Bay Distance (ft)	0	0	0	0	0	0	0	0	0	0	0	0	
	Approach Delay (sec/veh)	0.3			0.8			4.4			0.0			
	Approach LOS	A			A			A			A			

Intersection	MOE	Eastbound Approach			Westbound Approach			Northbound Approach			Southbound Approach			Intersection Total
		EBL	EBT	EBR	WBL	WBT	WBR	NBL	NBT	NBR	SBL	SBT	SBR	
Peavey Road & West Access	Movement Delay (sec/veh)	2.6	0.5	0.0	1.9	0.0	0.2	4.7	0.0	2.1	4.5	0.0	2.3	1.2
	Total Delay (hr)	0.0	0.0	0.0	0.0	0.0	0.0	0.0	0.0	0.0	0.0	0.0	0.0	0.0
	Movement LOS	A	A	A	A	A	A	A	A	A	A	A	A	A
	Movement Volume	68	80	0	1	0	76	1	0	2	10	0	8	246
	Movement 95th Queue (ft)	28	0	0	0	0	0	8	8	12	37	37	37	
	Storage Bay Distance (ft)	50	0	0	0	0	0	0	0	0	0	0	0	
	Approach Delay (sec/veh)	1.5			0.2			3.0			3.5			
	Approach LOS	A			A			A			A			

Intersection	MOE	Eastbound Approach			Westbound Approach			Northbound Approach			Southbound Approach			Intersection Total
		EBL	EBT	EBR	WBL	WBT	WBR	NBL	NBT	NBR	SBL	SBT	SBR	
Peavey Road & North Access	Movement Delay (sec/veh)	0.0	0.3	0.0	2.4	0.4	0.0	4.7	0.0	1.3	0.0	0.0	0.0	1.0
	Total Delay (hr)	0.0	0.0	0.0	0.0	0.0	0.0	0.0	0.0	0.0	0.0	0.0	0.0	0.0
	Movement LOS	A	A	A	A	A	A	A	A	A	A	A	A	A
	Movement Volume	0	91	1	74	76	0	1	0	27	0	0	0	270
	Movement 95th Queue (ft)	0	0	0	27	0	0	9	0	0	0	0	0	
	Storage Bay Distance (ft)	0	0	0	150	0	0	0	0	0	0	0	0	
	Approach Delay (sec/veh)	0.3			1.4			1.4			0.0			
	Approach LOS	A			A			A			A			

2042 Build - PM Peak Hour

Intersection	MOE	Eastbound Approach			Westbound Approach			Northbound Approach			Southbound Approach			Intersection Total
		EBL	EBT	EBR	WBL	WBT	WBR	NBL	NBT	NBR	SBL	SBT	SBR	
Oakridge Drive & South Access	Movement Delay (sec/veh)	0.0	0.4	0.2	2.1	0.8	0.0	4.7	0.0	2.9	0.0	0.0	0.0	1.3
	Total Delay (hr)	0.0	0.0	0.0	0.0	0.0	0.0	0.0	0.0	0.0	0.0	0.0	0.0	0.0
	Movement LOS	A	A	A	A	A	A	A	A	A	A	A	A	A
	Movement Volume	0	73	2	44	61	0	15	0	13	0	0	0	208
	Movement 95th Queue (ft)	0	0	0	17	17	0	44	0	44	0	0	0	
	Storage Bay Distance (ft)	0	0	0	0	0	0	0	0	0	0	0	0	
	Approach Delay (sec/veh)	0.4			1.3			3.9			0.0			
	Approach LOS	A			A			A			A			

Intersection	MOE	Eastbound Approach			Westbound Approach			Northbound Approach			Southbound Approach			Intersection Total
		EBL	EBT	EBR	WBL	WBT	WBR	NBL	NBT	NBR	SBL	SBT	SBR	
Peavey Road & West Access	Movement Delay (sec/veh)	1.9	0.3	0.4	1.5	0.0	0.1	4.5	0.0	1.5	4.4	0.0	3.1	2.4
	Total Delay (hr)	0.0	0.0	0.0	0.0	0.0	0.0	0.0	0.0	0.0	0.1	0.0	0.1	0.2
	Movement LOS	A	A	A	A	A	A	A	A	A	A	A	A	A
	Movement Volume	7	12	55	2	0	9	10	0	0	51	0	63	209
	Movement 95th Queue (ft)	0	0	0	0	0	0	29	29	7	55	55	55	
	Storage Bay Distance (ft)	0	0	0	0	0	0	0	0	0	0	0	0	
	Approach Delay (sec/veh)	0.5			0.4			4.5			3.7			
	Approach LOS	A			A			A			A			

Intersection	MOE	Eastbound Approach			Westbound Approach			Northbound Approach			Southbound Approach			Intersection Total
		EBL	EBT	EBR	WBL	WBT	WBR	NBL	NBT	NBR	SBL	SBT	SBR	
Peavey Road & North Access	Movement Delay (sec/veh)	0.0	1.6	0.5	3.3	0.9	0.0	9.7	0.0	7.2	0.0	0.0	0.0	5.1
	Total Delay (hr)	0.0	0.0	0.0	0.3	0.0	0.0	0.0	0.0	0.7	0.0	0.0	0.0	1.0
	Movement LOS	A	A	A	A	A	A	A	A	A	A	A	A	A
	Movement Volume	0	63	1	289	11	0	1	0	360	0	0	0	725
	Movement 95th Queue (ft)	0	11	11	52	0	0	92	0	136	0	0	0	
	Storage Bay Distance (ft)	0	0	0	150	0	0	0	0	0	0	0	0	
	Approach Delay (sec/veh)	1.6			3.2			7.2			0.0			
	Approach LOS	A			A			A			A			

Appendix C:

Trip Generation Documentation

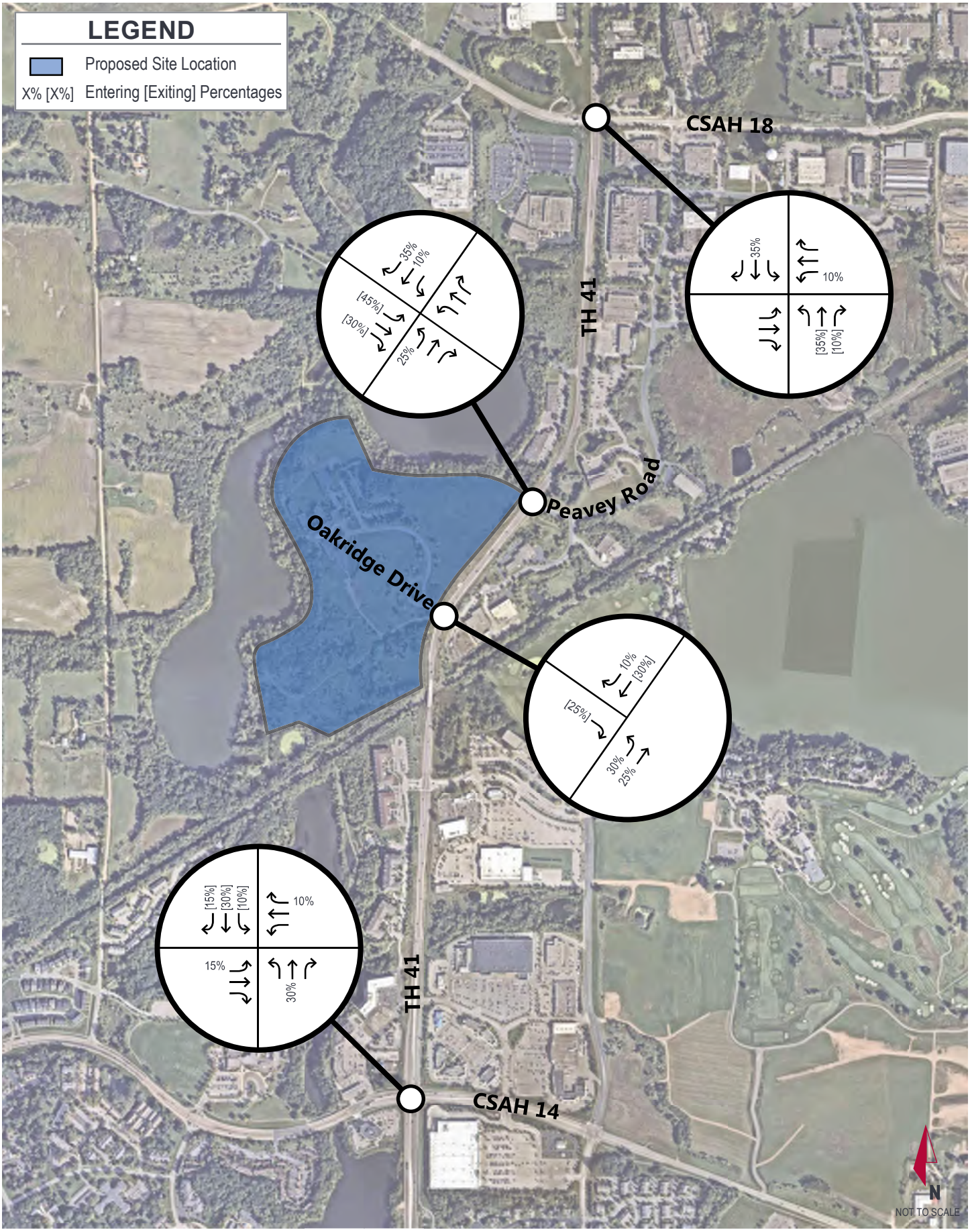

Kimley»Horn

EXHIBIT 5

TRIP DISTRIBUTION PERCENTAGES

OAK RIDGE DEVELOPMENT, CHASKA, MN

Appendix D:

Parking Deck Prelminary Concept

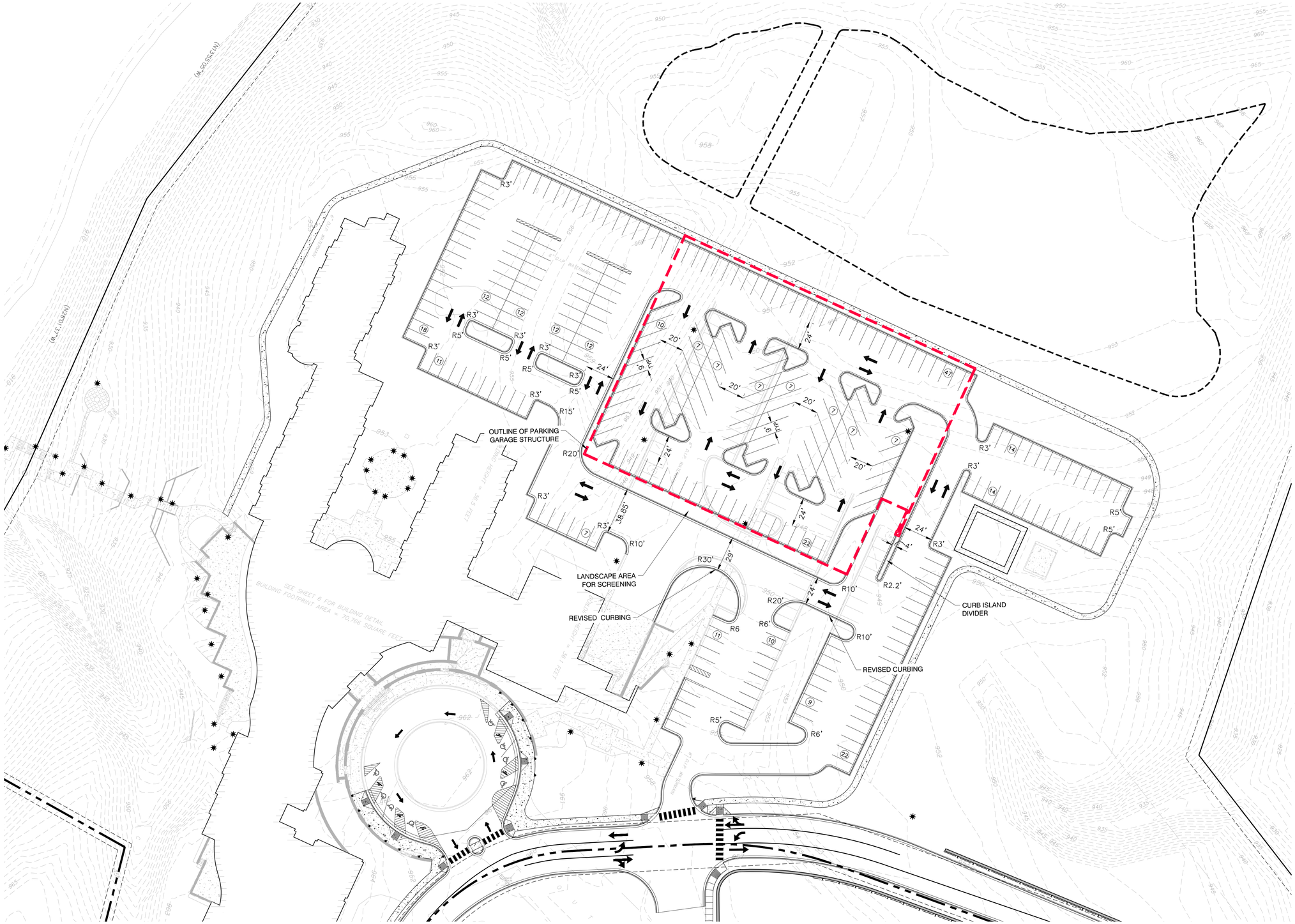

x:\2021\210004\exhibits\garage structure parking option\210004-garage parking exhibit - 2.dwg

OAKRIDGE COMMONS PARKING DECK - OPTION 2

CHASKA, MN

8-31-21

REQUIRED PARKING:

ONE STALL FOR EVERY 250 SF OF OFFICE OR CLINIC AREA:	171,000 S.F. (EXISTING BUILDING) 171,000 * 0.80 = 136,800 SF 136,800 / 250 = 547 STALLS REQUIRED

PARKING:

PROPOSED PARKING PROVIDED WITH PARKING STRUCTURE (CURRENT LAYOUT):	566 PARKING STALLS
	266 PARKING STRUCTURE STALLS (TWO FLOORS)
	300 SURFACE STALLS

0 10 20 40
SCALE IN FEET

ALLIANT ENGINEERING

SK-1

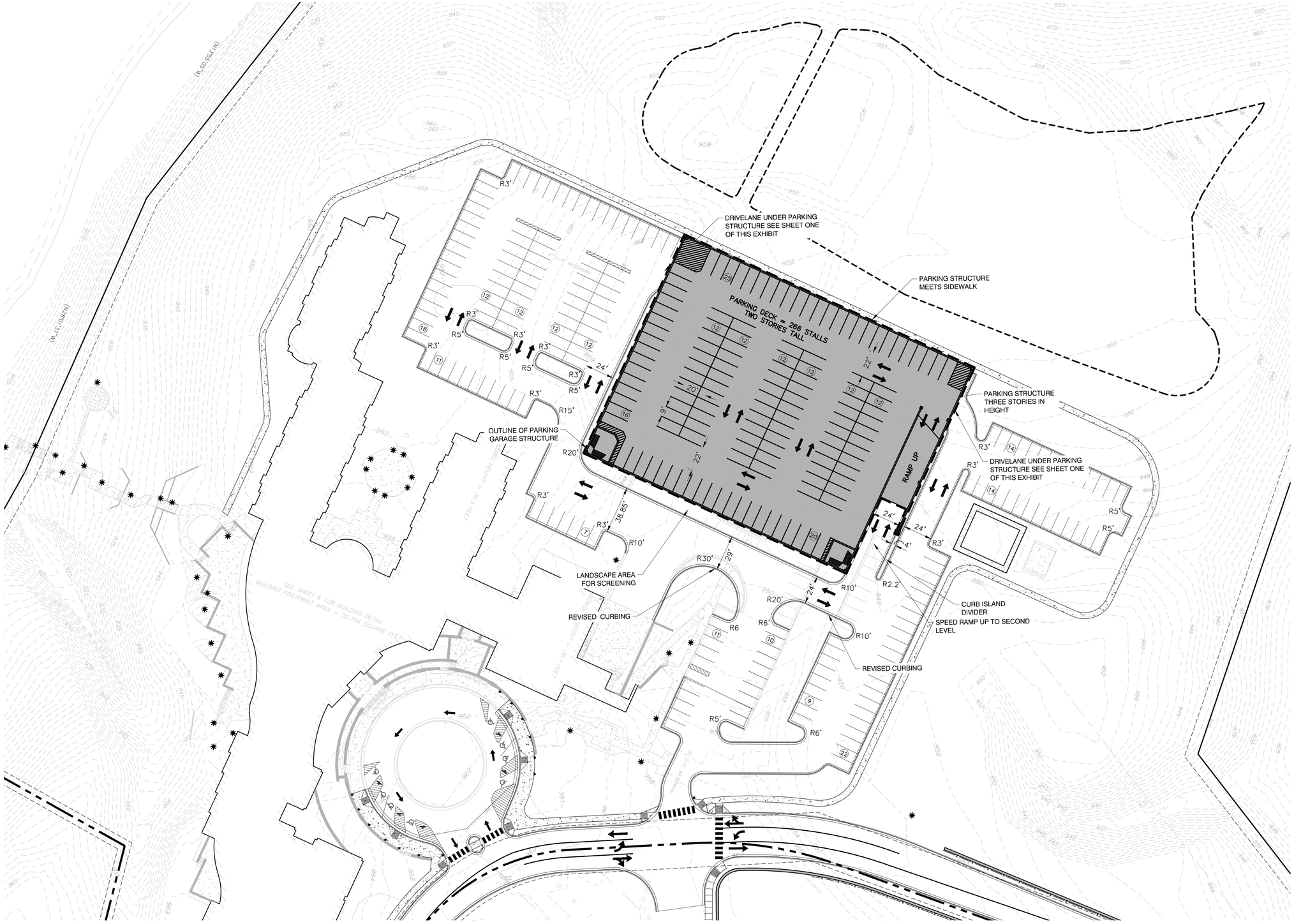

REQUIRED PARKING:

ONE STALL FOR EVERY 250 SF OF OFFICE OR CLINIC AREA:

171,000 S.F. (EXISTING BUILDING)
171,000 * 0.80 = 136,800 SF
136,800 / 250 = 547 STALLS REQUIRED

PARKING:

PROPOSED PARKING PROVIDED WITH PARKING STRUCTURE (CURRENT LAYOUT):

566 PARKING STALLS

266 PARKING STRUCTURE STALLS (TWO FLOORS)

300 SURFACE STALLS

x:\2021\210004\exhibits\garage structure parking option\210004-garage parking exhibit - 2.dwg

OAKRIDGE COMMONS PARKING DECK - OPTION 2

CHASKA, MN

8-31-21

0 10 20 40
SCALE IN FEET

ALLIANT ENGINEERING

SK-2

COSTCO WHOLESALE

164,545 S.F.
FFE = 966.00

45' EASEMENT

85'

6'

12' TURN LANE

R30'
R30'

R30'
R30'

16.87'
16.9'
13.5'
13.5'

57' (WIDENED EASEMENT)

6' OFFSET WIDENING

6' OFFSET WIDENING

6'

6'

R60'
R60'

R40'
R40'

POOL

FOR REVIEW ONLY
PRELIMINARY
NOT FOR CONSTRUCTION

0 15 30 60
SCALE IN FEET

ALLIANT
733 Marquette Avenue
Suite 700
Minneapolis, MN 55402
612.758.3080
www.alliant-inc.com

OAK RIDGE DRIVE TURN LANE EXHIBIT

OAK RIDGE COMMONS
CHASKA, MN

I hereby certify that this plan, specification, or report was prepared by me or under my direct supervision and that I am a duly Licensed PROFESSIONAL ENGINEER under the laws of the State of MINNESOTA

Date License No.

QUALITY ASSURANCE/CONTROL

BY DATE

DATE	ISSUE
5-27-22	SK-2

PROJECT TEAM DATA
DESIGNED:
DRAWN:
PROJECT NO:

SK-2

Drawing name: X:\2021\210004\exhibits\5-24-22 Oak Ridge Drive widening for continental access\210004-bas-widening-linework-only.dwg May 27, 2022 - 8:33am

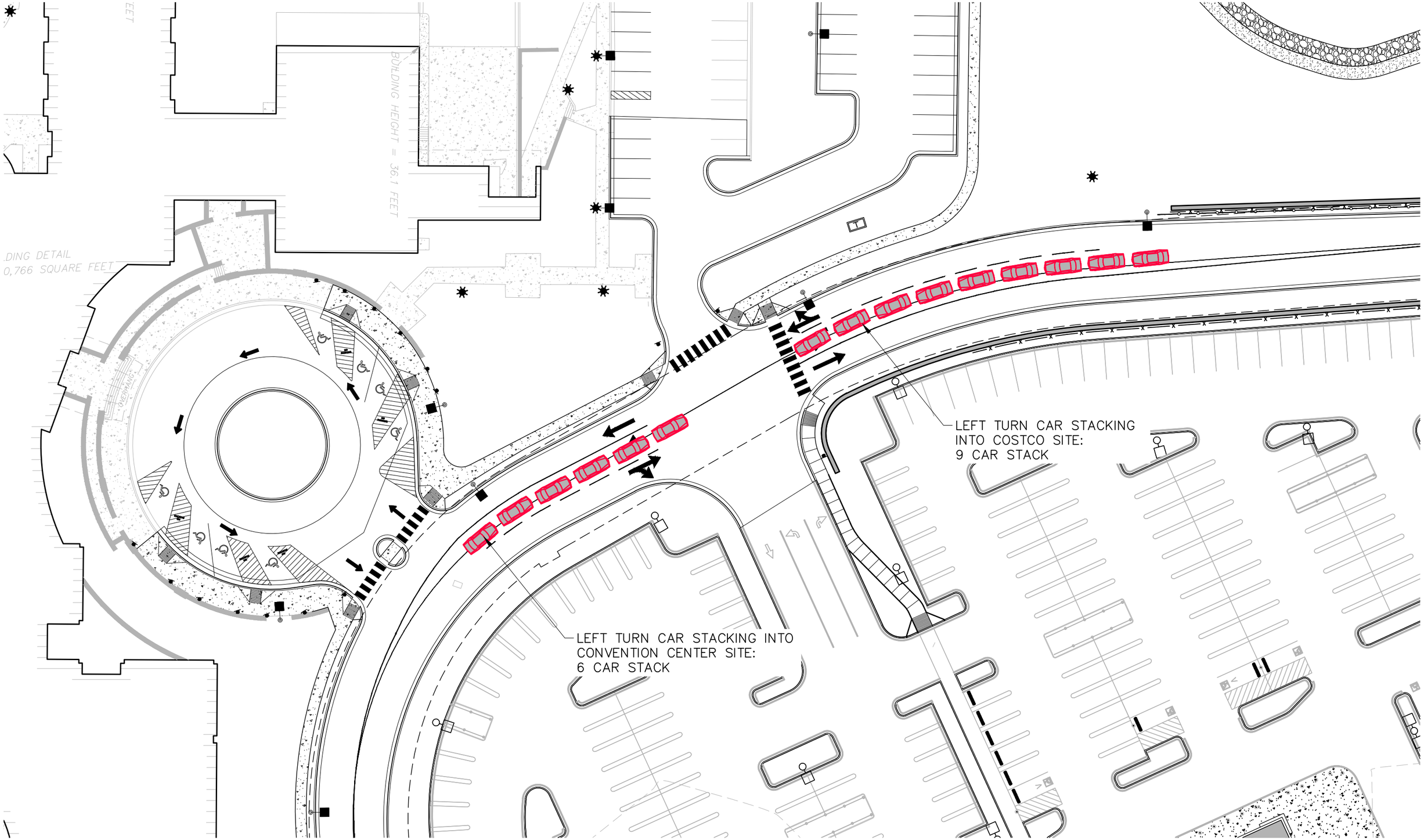

x:\2021\210004\exhibits\5-25-22 - turn lane stacking exhibit - conference center\210004-turn lane stacking exhibit - conference center.dwg

OAK RIDGE COMMONS - CAR STACKING EXHIBIT

CHASKA, MN

5-27-22

ALLIANT ENGINEERING

SK-1

Mark Kronbeck

From: Nick Grage
Sent: Sunday, March 6, 2022 1:28 PM
To: Mark Kronbeck
Subject: RE: [EXTERNAL]Mass Grading and Erosion Control Plan
Attachments: Incomplete Submittal Letter - Oak Ridge - Final Plan - 02.18.2022.pdf; Oak Ridge Commons_TIS_20210903_LTLs.pdf; RE: Oak Ridge, Chaska

Mark,

Section 4.0 (pages 10 & 11) of the attached Oak Ridge Commons Traffic Impact Study addresses the left-turn lanes into all three ring road access locations. To re-summarize the conclusions from the traffic analysis completed as part of the TIS and answer question #2:

- A westbound LTL is recommended at the north access (primary Costco access).
- A northbound LTL is recommended at the west access (convention center access) and a mirrored southbound LTL is included in the site plan (secondary Costco access).
- A westbound LTL is NOT recommended at the south access (housing access) due to left-turn volumes into the housing development being low (less than 100 vehicles per hour). Queuing observed in the models was minimal throughout both peak hours under 2042 traffic volumes. If desired, we can revise the TIS to include the following language as we did for the north access:
    - *Additional signing for the eastbound approach may be needed as traffic volumes increase in the future to avoid eastbound peak hour queues from blocking westbound left-turns.*

To address a few additional items that you mentioned during our discussion but are not explicitly included in the attached incomplete submittal letter:

- When would the housing access need a LTL? We would recommend a LTL at the housing access IF the left-turn volumes were more than 100 vehicles per hour (not anticipated given development size) OR safety became a concern once the development is built (not expected given lower speeds and adequate sight lines).
- Convention Center versus General Office Building comparison: The attached email includes the revised trip generation table that estimates convention center trips (66 AM / 57 PM) which was developed for the pavement design. The attached TIS includes the original trip generation table that estimates general office building trips (140 AM / 113 PM), roughly twice as many trips for each peak hour.
- Would the convention center/office property need dual exiting lanes? While developing the TIS we modeled the more conservative volumes using trips for a general office building. Under 2042 PM peak hour traffic volumes the 95th percentile queuing exiting the west access was approximately 2 vehicles, with average queues between 1-2 vehicles. As such, there does not appear to be a need for dual exiting lanes given the proposed land use.

If you have questions or need additional clarification please let me know.

Thank you,

Nick Grage, PE (MN, IA, WI), PTOE, RSP$_1$
SENIOR TRAFFIC ENGINEER
612.584.4760 DIRECT | 612.758.3080 MAIN

From: Mark Kronbeck <mkronbeck@alliant-inc.com>
Sent: Monday, February 21, 2022 10:01 AM

To: Nick Grage <ngrage@alliant-inc.com>
Subject: FW: [EXTERNAL]Mass Grading and Erosion Control Plan

Nick,

See #2 of the attached. Didn't we already respond to this left turn lane into Continental? Please advise.

Thanks,

Mark Kronbeck, PLA, ASLA
ASSOCIATE
Alliant Engineering, Inc.
733 Marquette Ave, Ste 700, Minneapolis, MN 55402
612.767.9338 DIRECT | **612.758.3080** MAIN

Building better communities with excellence and passion.
ALLIANT // An employee-owned company.

From: Elizabeth Hanson <EHanson@chaskamn.com>
Sent: Friday, February 18, 2022 4:32 PM
To: Mark Kronbeck <mkronbeck@alliant-inc.com>; Willy Boulay <wboulay@lsblack.com>; Michael Hudson <mhudson@lsblack.com>; Stephen Cross <scross@crossengineering.net>; Eric E Thom <ethom@cproperties.com>
Cc: Clark Wicklund <cwicklund@alliant-inc.com>; Nicole Gulick <ngulick@alliant-inc.com>; Kevin Ringwald <KRingwald@chaskamn.com>; Mike Shannon <mshannon@alliant-inc.com>; Spencer Tolliver <stolliver@alliant-inc.com>; Nate Kabat <nkabat@chaskamn.com>; Matt Clark <MClark@chaskamn.com>; Brent Alcott <balcott@chaskamn.com>
Subject: RE: [EXTERNAL]Mass Grading and Erosion Control Plan

All,

Please find attached the incomplete submittal letter. The next available deadline is Tuesday, March 1st to make the April 13th Planning Commission and April 18th City Council meetings.

Elizabeth Hanson, AICP
City Planner
City of Chaska
952-448-9200

From: Mark Kronbeck <mkronbeck@alliant-inc.com>
Sent: Wednesday, February 2, 2022 1:24 PM
To: Matt Clark <MClark@chaskamn.com>; Willy Boulay <wboulay@lsblack.com>; Elizabeth Hanson <EHanson@chaskamn.com>; Nate Kabat <nkabat@chaskamn.com>; Michael Hudson <mhudson@lsblack.com>; Stephen Cross <scross@crossengineering.net>; Eric E Thom <ethom@cproperties.com>
Cc: Clark Wicklund <cwicklund@alliant-inc.com>; Nicole Gulick <ngulick@alliant-inc.com>; Kevin Ringwald <KRingwald@chaskamn.com>; Mike Shannon <mshannon@alliant-inc.com>; Spencer Tolliver <stolliver@alliant-inc.com>
Subject: [EXTERNAL]Mass Grading and Erosion Control Plan

Matt and et al,

Here is a link to the Oak Ridge Mass Grading and Erosion Control Plans. We will need to get a grading permit from MnDOT as part of the retaining wall installation and mass grading efforts.

2-2-22 Mass Grading + Erosion Control Set

Please let us know if you have any questions or comments.

Thank you,

Mark Kronbeck, PLA, ASLA
ASSOCIATE
Alliant Engineering, Inc.
733 Marquette Ave, Ste 700, Minneapolis, MN 55402
612.767.9338 DIRECT | **612.758.3080** MAIN

Building better communities with excellence and passion.
ALLIANT // An employee-owned company.

From: Matt Clark <MClark@chaskamn.com>
Sent: Wednesday, February 2, 2022 10:24 AM
To: Willy Boulay <wboulay@lsblack.com>; Elizabeth Hanson <EHanson@chaskamn.com>; Nate Kabat <nkabat@chaskamn.com>; Michael Hudson <mhudson@lsblack.com>; Mark Kronbeck <mkronbeck@alliant-inc.com>; Stephen Cross <scross@crossengineering.net>; Eric E Thom <ethom@cproperties.com>
Cc: Clark Wicklund <cwicklund@alliant-inc.com>; Nicole Gulick <ngulick@alliant-inc.com>; Kevin Ringwald <KRingwald@chaskamn.com>
Subject: RE: [EXTERNAL]RE: Oak Ridge - Project Timeline Round 2

Attached are comments with the project work plan as well as the most recent communications proposal for services related to the roundabout construction to the north. The costs associated with the work plan are something that will be incorporated into the DA and project schedule and look forward to hearing back with next steps.

From: Willy Boulay <wboulay@lsblack.com>
Sent: Monday, January 24, 2022 11:00 AM
To: Elizabeth Hanson <EHanson@chaskamn.com>; Nate Kabat <nkabat@chaskamn.com>; Matt Clark <MClark@chaskamn.com>; Michael Hudson <mhudson@lsblack.com>; Mark Kronbeck <mkronbeck@alliant-inc.com>; Stephen Cross <scross@crossengineering.net>; Eric E Thom <ethom@cproperties.com>
Cc: Clark Wicklund <cwicklund@alliant-inc.com>; Nicole Gulick <ngulick@alliant-inc.com>
Subject: [EXTERNAL]RE: Oak Ridge - Project Timeline Round 2

Hi All,

Please see attached current MnDOT schedule and adjusted Roundabout Work plan with names.

Matt, let us know your thoughts on the schedule and how we back into our City schedule with these dates. How is it best to reach out to MnDOT for a call, if that's still needed at this time to discuss the project and Cooperative Agreement?

We will work towards a submission of the items I outlined in #3 below by the end of this week.

Thanks!
Willy

WILLY BOULAY
LS Black Development
Developer & Vice President
C: 952.465.7165

From: Willy Boulay
Sent: Wednesday, January 19, 2022 4:34 PM
To: Elizabeth Hanson <EHanson@chaskamn.com>; Nate Kabat <nkabat@chaskamn.com>; Matt Clark <MClark@chaskamn.com>; Michael Hudson <mhudson@lsblack.com>; Mark Kronbeck <mkronbeck@alliant-inc.com>; Stephen Cross <scross@crossengineering.net>; Eric E Thom <ethom@cproperties.com>
Subject: RE: Oak Ridge - Project Timeline Round 2

Hi All,

Great meeting today, thanks for the time. We know this is a complex project and appreciate the willingness to work together to make it all come to life!

Notes/follow ups from the meeting:

1. Willy/Mike to send MnDOT bar chart schedule by end of this week. City to review and decide where City meetings/approvals fit into process.
2. Alliant (Traffic – Nicole) to add names to the MnDOT work plan and send to City; Matt Clark and Clark Wicklund to discuss this week. Team to reach out to MnDOT for a meeting to discuss the remaining process and Cooperative Agreement.
3. Alliant (Civil – Mark) to create overall plan sheets for all common site work. Willy/Mike to send this, plus costs for the work and the near-final REA, to this entire group mid-next week so the City can begin drafting the Development Agreement.
    a. Leaving door open for early grading (no infrastructure installations) prior to MnDOT approval, but first things first getting this information over.
4. Alliant (Civil – Mark) to submit Final PUD & Plat submission in early February as planned. Liz and Nate at the City to determine what is needed from Willy/Mike to extend the review time if necessary to time out with MnDOT approvals.

We will get to work – be in touch soon.

Thanks!
Willy

WILLY BOULAY
LS Black Development
Developer & Vice President
C: 952.465.7165

-----Original Appointment-----
From: Elizabeth Hanson <EHanson@chaskamn.com>
Sent: Tuesday, January 11, 2022 4:23 PM
To: Elizabeth Hanson; Nate Kabat; Matt Clark; Willy Boulay; Michael Hudson; Mark Kronbeck; Stephen Cross; Eric E Thom

Subject: Oak Ridge - Project Timeline Round 2
When: Wednesday, January 19, 2022 2:30 PM-3:30 PM (UTC-06:00) Central Time (US & Canada).
Where: https://us02web.zoom.us/j/84290725578?pwd=WURNQTBrWVBneWVraGtEMkRwaGhaQT09

Elizabeth Hanson is inviting you to a scheduled Zoom meeting.

Join Zoom Meeting
https://us02web.zoom.us/j/84290725578?pwd=WURNQTBrWVBneWVraGtEMkRwaGhaQT09

Meeting ID: 842 9072 5578
Passcode: 615986
One tap mobile
+13017158592,,84290725578#,,,,*615986# US (Washington DC)
+13126266799,,84290725578#,,,,*615986# US (Chicago)

Dial by your location
+1 301 715 8592 US (Washington DC)
+1 312 626 6799 US (Chicago)
+1 646 558 8656 US (New York)
+1 253 215 8782 US (Tacoma)
+1 346 248 7799 US (Houston)
+1 669 900 9128 US (San Jose)
877 853 5247 US Toll-free
888 788 0099 US Toll-free
833 548 0276 US Toll-free
833 548 0282 US Toll-free
Meeting ID: 842 9072 5578
Passcode: 615986
Find your local number: https://us02web.zoom.us/u/kevN7bhGCZ

This City of Chaska email and any attachments may contain confidential information. If the reader of this email is not the intended recipient, please delete this email and any attachments immediately and notify me. Thank you.

CAUTION: This email originated from outside of the organization. Do not click links, open attachments, or respond unless you recognize the sender and know the content is safe.

Any attached files are the property of Alliant Engineering, Inc. and are transmitted for your exclusive use and convenience. By accepting and using these files you assume all responsibility for the content. Hard copies, signed and dated, will govern over any electronic files furnished herein.

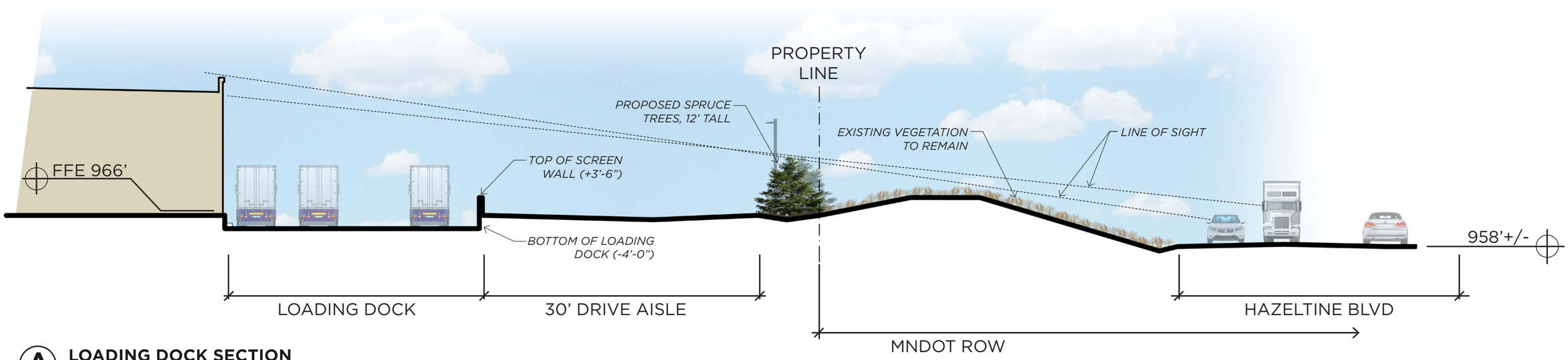

A **LOADING DOCK SECTION**
SCALE: NTS

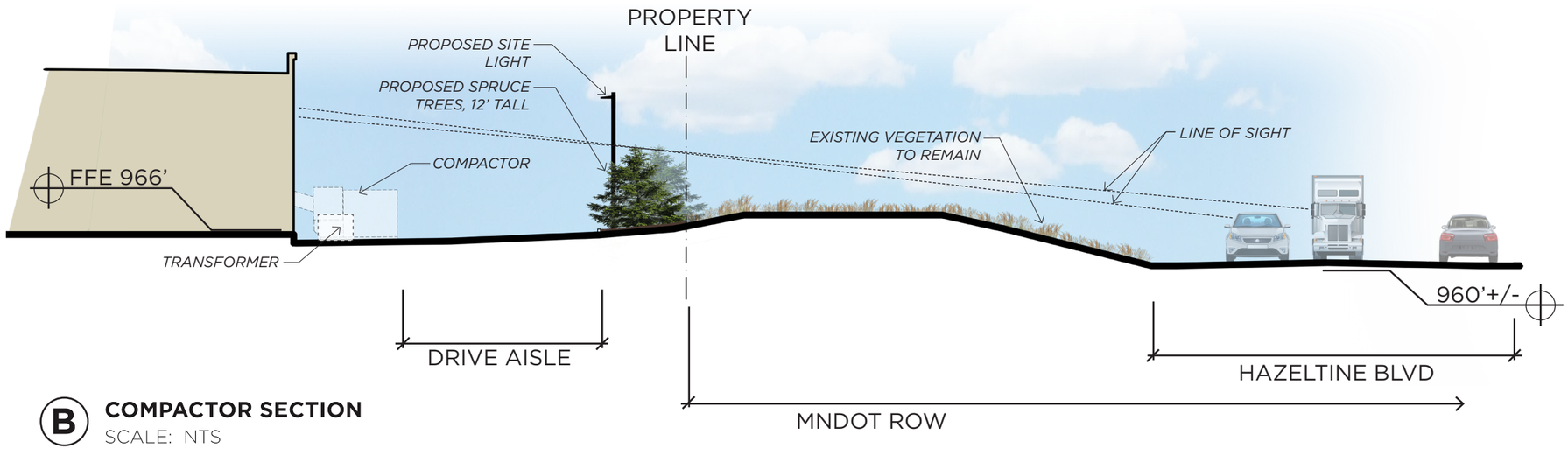

B **COMPACTOR SECTION**
SCALE: NTS

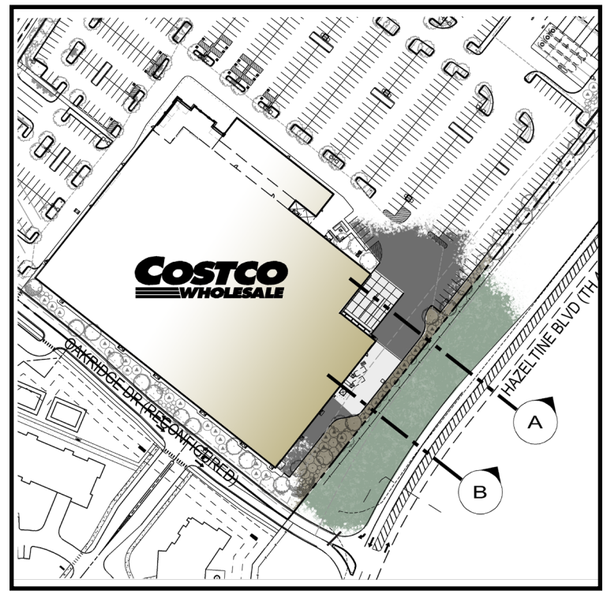

SITE PLAN
SCALE: NTS

SEPTEMBER 30, 2021
PROJECT # 19-5374-01
CHASKA, MN

PRELIMINARY SITE SECTIONS FROM HAZELTINE BLVD

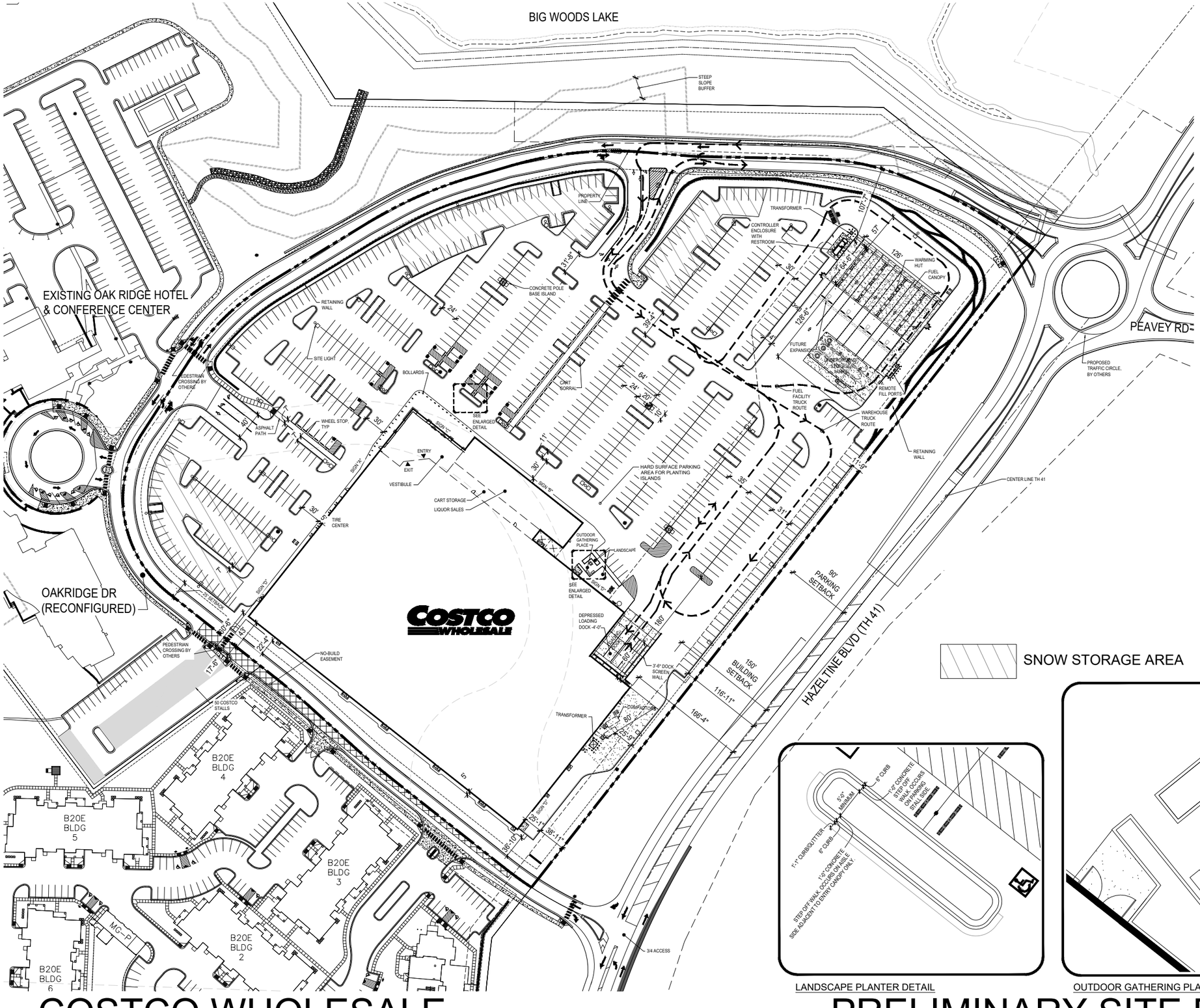

SNOW STORAGE AREA

LANDSCAPE PLANTER DETAIL

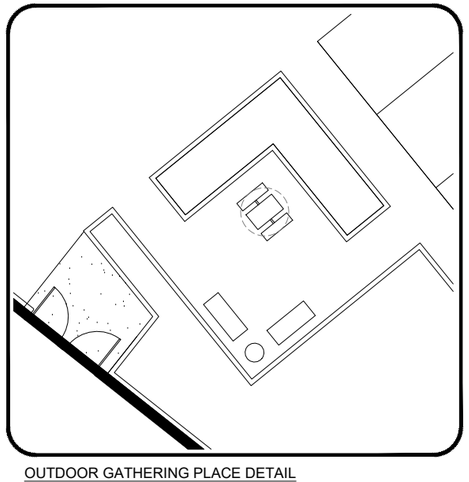

OUTDOOR GATHERING PLACE DETAIL

PROJECT DATA

CLIENT:	COSTCO WHOLESALE 999 LAKE DRIVE ISSAQUAH, WA 98027
PROJECT ADDRESS:	NWC OF HAZELTINE BLVD & OAKRIDGE DR CHASKA, MN

SITE DATA:

TOTAL COSTCO SITE AREA:	16.96 ACRES (738,855 SF)
JURISDICTION:	CITY OF CHASKA
ZONING:	PMD - PLANNED MULTI-USE DISTRICT
BUILDING SETBACKS:	
FROM CENTERLINE OF TH 41 ROADWAY	150'
FROM PROPERTY LINE FRONT/SIDE/REAR	20'
PARKING SETBACKS:	
FROM CENTERLINE OF TH 41 ROADWAY	90'
FROM PROPERTY LINE FRONT/SIDE/REAR	10'
TOTAL GREEN AREA:	103,401 SF / 713,003 = 14.5%
10% HARD SURFACE PARKING PARKING AREA FOR PLANTING ISLANDS:	36,286 SF / 351,730 SF = 10.3%

BUILDING DATA:

TOTAL BUILDING FOOTPRINT AREA:	165,027 SF
INCLUDES:	
NET MAIN SALES (151,074 SF - 1 bay 5,862 SF)	**144,873 SF**
NET MECHANICAL / FIRE	2,415 SF
NET ENCLOSED VESTIBULE	4,909 SF
NET ENCLOSED CART STORAGE	2,761 SF
NET LIQUOR SALES	7,978 SF
BUILDING ENVELOPE	2,091 SF

PARKING DATA:

TOTAL PARKING:	720 STALLS
INCLUDES:	
① 10' WIDE STALLS	703 STALLS
⑤ ACCESSIBLE STALLS	17 STALLS
NUMBER OF STALLS PER 1000 SF OF BUILDING AREA:	4.39 STALLS
OFFSITE PARKING:	50 STALLS

NOTES:
EXISTING CONDITIONS TO BE FIELD VERIFIED.

0 25' 50' 100'
1" = 50'-0"

COSTCO WHOLESALE
CHASKA, MN

CHASKA, MN
MG2

19-5374-01
OCTOBER 1, 2021

PRELIMINARY
SITE PLAN

DD11-19

© MG2, Inc. All rights reserved. No part of this document may be reproduced in any form or by any means without permission in writing from MG2.

COSTCO WHOLESALE

CHASKA, MINNESOTA

PRELIMINARY SITE PLAN

PRELIMINARY PUD SUBMITTAL OCTOBER 1, 2021

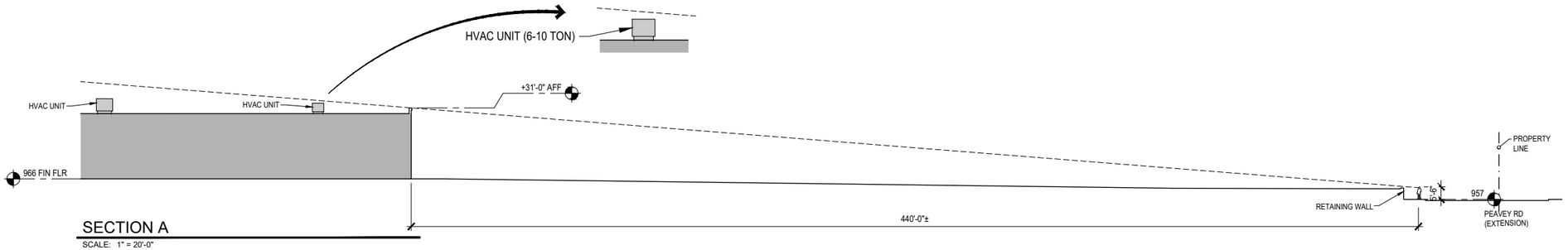

SECTION A

SCALE: 1" = 20'-0"

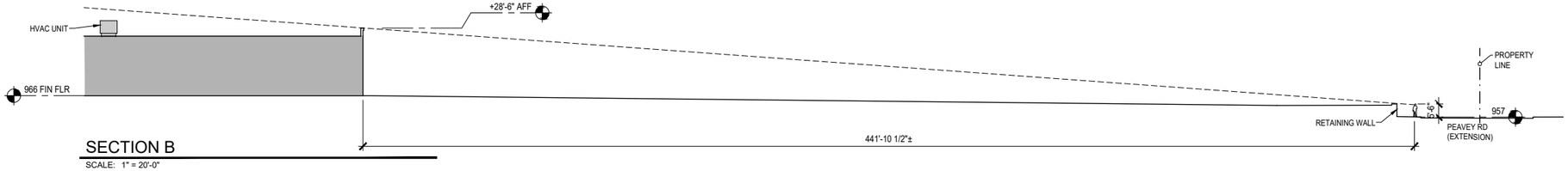

SECTION B

SCALE: 1" = 20'-0"

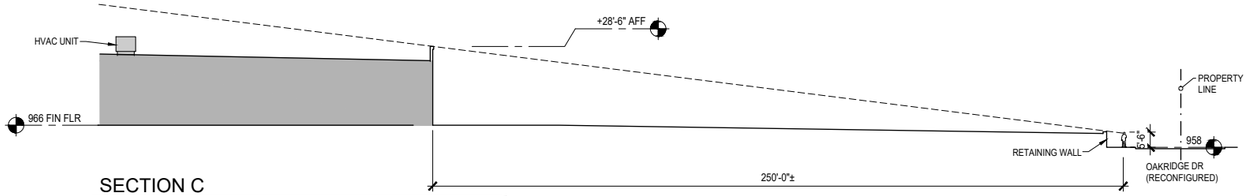

SECTION C

SCALE: 1" = 20'-0"

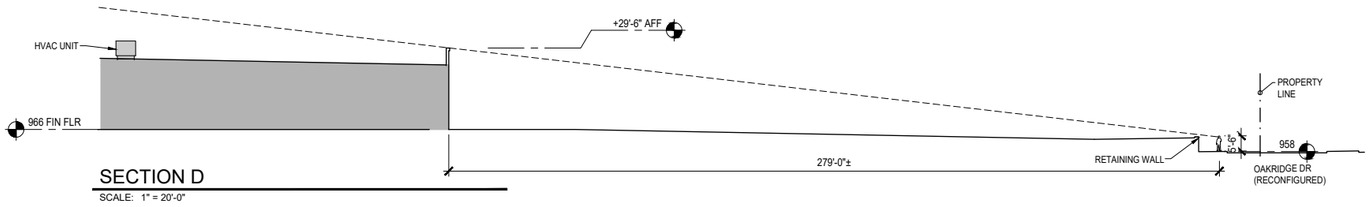

SECTION D

SCALE: 1" = 20'-0"

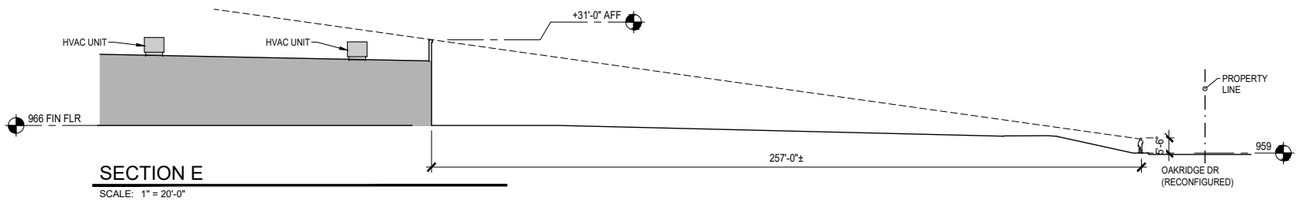

SECTION E

SCALE: 1" = 20'-0"

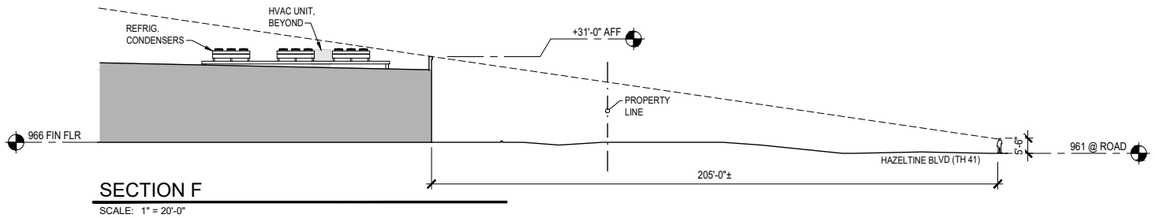

SECTION F

SCALE: 1" = 20'-0"

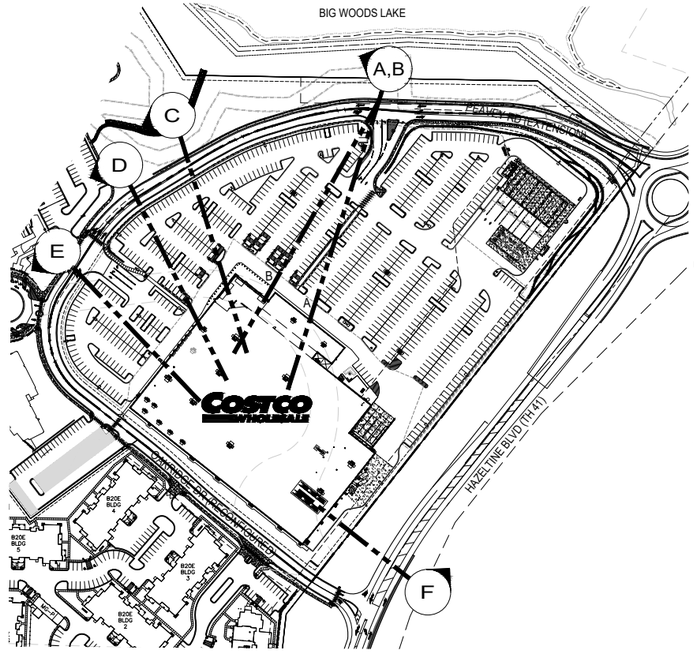

COSTCO WHOLESALE

CHASKA, MN

CHASKA, MN

MG2

19-5374-01
OCTOBER 3, 2021

PRELIMINARY SITE PLAN

P13-04

© MG2, Inc. All rights reserved. No part of this document may be reproduced in any form or by any means without permission in writing from MG2.

COSTCO WHOLESALE

CHASKA, MINNESOTA

PRELIMINARY SITE SECTIONS

OCTOBER 3, 2021



MG2

OCTOBER 5TH, 2021
19-5374-01
CHASKA, MN

PROPERTY BOUNDARY

COSTCO WHOLESALE

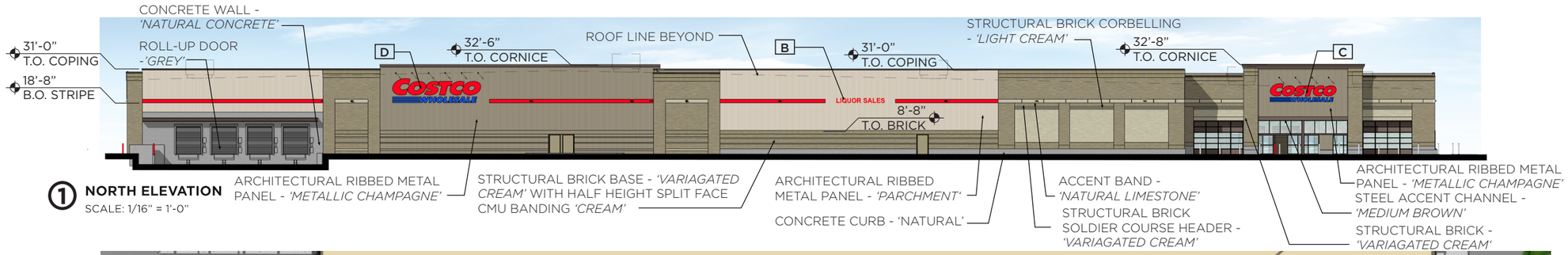

1 NORTH ELEVATION
SCALE: 1/16" = 1'-0"

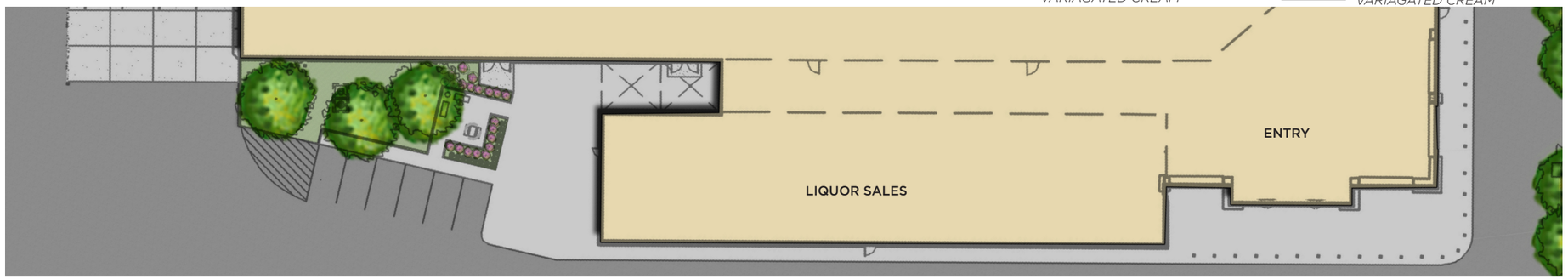

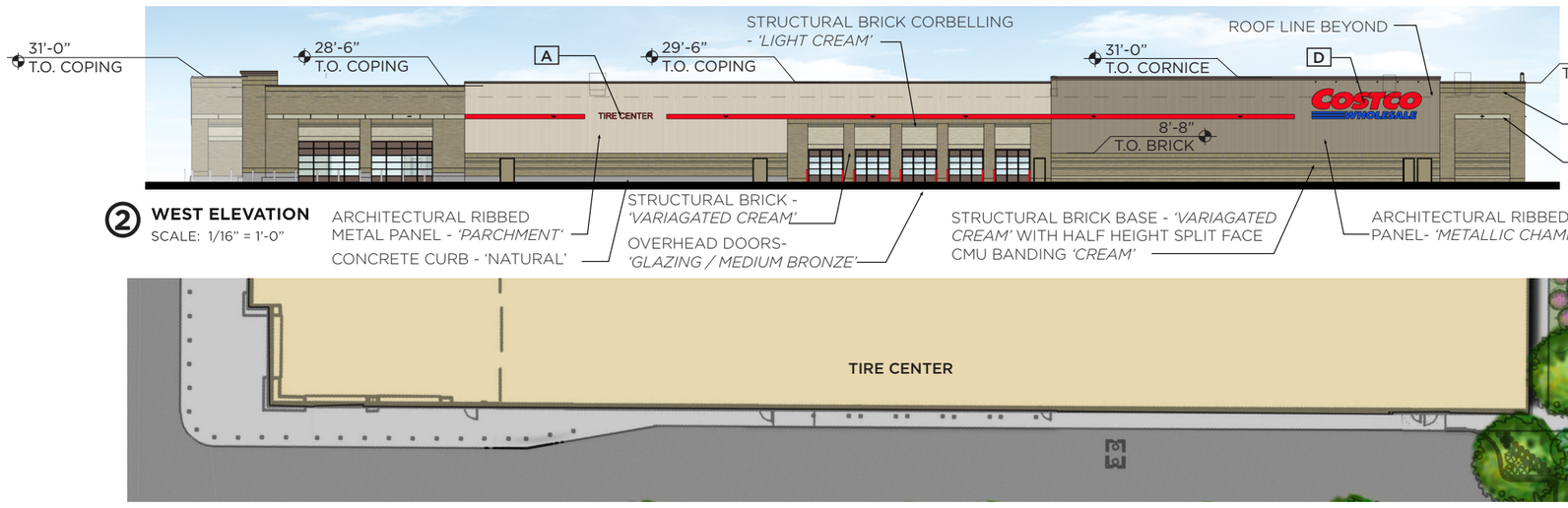

2 WEST ELEVATION
SCALE: 1/16" = 1'-0"

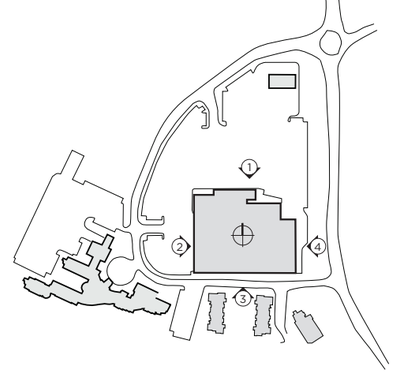



5 SIGNAGE DETAILS

SIGN TABLE

	QUANTITY	SIGN	SIZE	AREA (EACH)	TOTAL SF
A	1	TIRE CENTER	17'-4" x 1'-9"	31 SF	31 SF
B	1	LIQUOR SALES	18'-0" x 1'-9"	35 SF	35 SF
C	1	COSTCO WHOLESALE	6'-7" X 24'-0"	158 SF	158 SF
D	3	COSTCO WHOLESALE	8'-9" X 32'-0"	280 SF	840 SF
				TOTAL SIGN AREA	1,064 SF

MG2

OCTOBER 5TH, 2021
PROJECT #19-5374-01
CHASKA, MN

PRELIMINARY WAREHOUSE ELEVATIONS

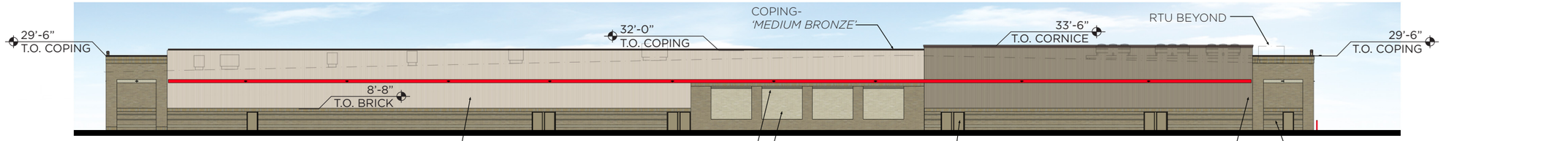

③ SOUTH ELEVATION
SCALE: 1/16" = 1'-0"

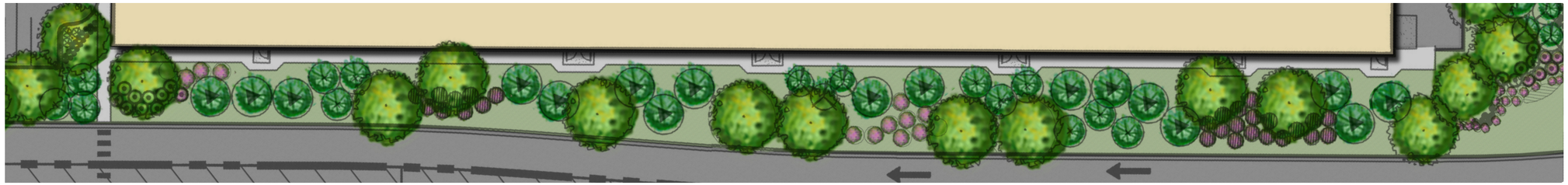

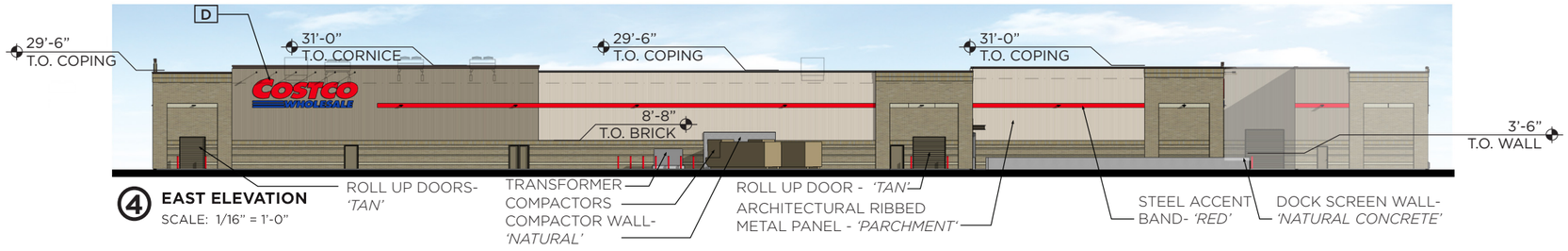

④ EAST ELEVATION
SCALE: 1/16" = 1'-0"

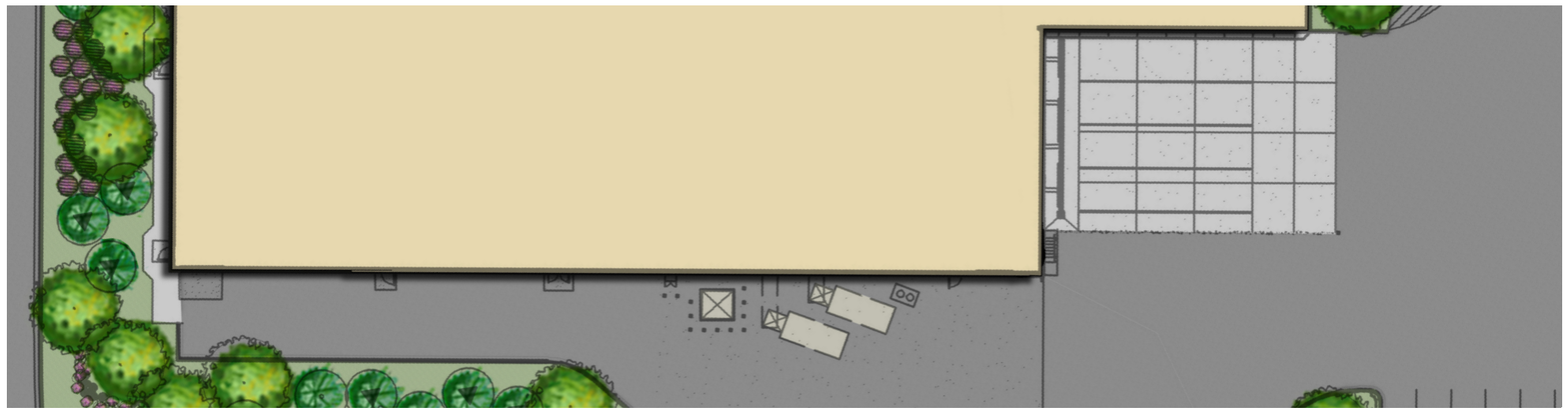

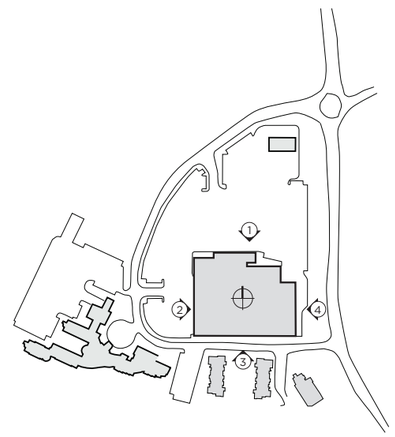

North Elevation		
MATERIAL	SQUARE FOOTAGE	PERCENTAGE
STRUCTURAL BRICK	5869	42%
LIMESTONE	194	1%
ARCHITECTURAL METAL PANEL	6108	43%
CONCRETE	1110	8%
GLASS	800	6%
TOTAL	14081	100%

West Elevation		
MATERIAL	SQUARE FOOTAGE	PERCENTAGE
STRUCTURAL BRICK	5031	44%
LIMESTONE	132	1%
ARCHITECTURAL METAL PANEL	5100	44%
CONCRETE	204	2%
GLASS	998	9%
TOTAL	11465	100%

South Elevation		
MATERIAL	SQUARE FOOTAGE	PERCENTAGE
STRUCTURAL BRICK	5717	39%
LIMESTONE	41	0%
ARCHITECTURAL METAL PANEL	8981	61%
CONCRETE	0	0%
GLASS	0	0%
TOTAL	14739	100%

East Elevation		
MATERIAL	SQUARE FOOTAGE	PERCENTAGE
STRUCTURAL BRICK	4808	43%
LIMESTONE	72	1%
ARCHITECTURAL METAL PANEL	6080	54%
CONCRETE	207	2%
GLASS	0	0%
TOTAL	11167	100%

Totals					
MATERIAL	SQUARE FOOTAGE	PERCENTAGE	CLASS 1	CLASS 2	CLASS 3
STRUCTURAL BRICK	21425	42%		•	
LIMESTONE	439	1%	•		
ARCHITECTURAL METAL PANEL	26269	51%		•	
CONCRETE	1521	3%			•
GLASS	1798	3%	•		
TOTAL	51452	100%	4.3%	92.7%	3.0%

⑥ MATERIAL CALCULATIONS
SCALE: NTS

MG2

OCTOBER 5TH, 2021
PROJECT #19-5374-01
CHASKA, MN

PRELIMINARY WAREHOUSE ELEVATIONS

COSTCO WHOLESALE



MG2

OCTOBER 5TH, 2021
PROJECT #19-5374-01
CHASKA, MN

ENTRY CANOPY PERSPECTIVE

COSTCO WHOLESALE



MG2

OCTOBER 5TH, 2021
PROJECT #19-5374-01
CHASKA, MN

NORTHEAST PERSPECTIVE

COSTCO WHOLESALE



OCTOBER 5TH, 2021
PROJECT #19-5374-01
CHASKA, MN

SOUTHWEST PERSPECTIVE





SOLDIER COURSE

COLUMNS / PILASTERS

INSET FIELD

CORBELING

COLUMNS



CURLING CENTER



CITY HALL

TEXTURED BANDING

INSET FIELD



OAK RIDGE CONFERENCE CENTER

LIMESTONE HEADER

BASE DETAILING

MG2

OCTOBER 5TH, 2021
PROJECT #19-5374-01
CHASKA, MN

CONTEXT / DETAILING

COSTCO WHOLESALE



① CANOPY AND DISPENSER ELEVATION (NORTH/SOUTH)
SCALE: 1/4" = 1'-0"



② CANOPY AND DISPENSER ELEVATION (EAST/WEST)
SCALE: 1/4" = 1'-0"

④ CANOPY SIGN
SCALE:NTS

SIGN TABLE

SIGN	*SIZE*	*AREA (EACH)*	*TOTAL SF*
COSTCO WHOLESALE	2'-6" x 8'-7"	21 SF	84 SF
		TOTAL SIGN AREA	84 SF

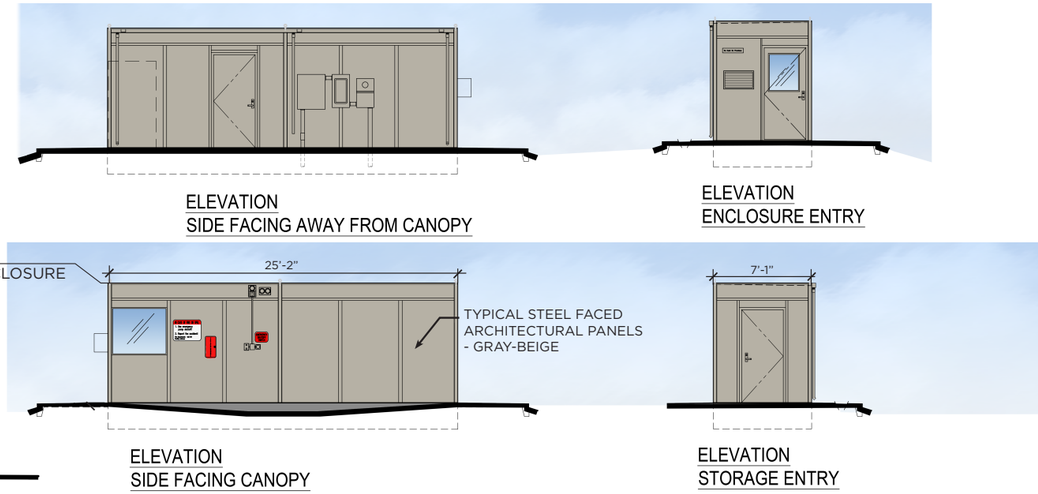

④ CONTROLLER ENCLOSURE EXTERIOR ELEVATIONS
SCALE:1/4" = 1'-0"

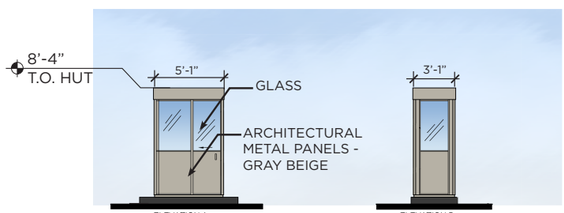

⑤ WARMING HUT ELEVATIONS
SCALE: 1/4" = 1'-0"

MG2

OCTOBER 5TH, 2021
PROJECT #19-5374-01
CHASKA, MN

PRELIMINARY FUEL ELEVATIONS

COSTCO WHOLESALE

SHEET INDEX

SHEET NO.	SHEET NAME
ASK.1	COVER SHEET
ASK.2	CONTEMPORARY SCHEME - FRONT & REAR ELEVATIONS
ASK.3	CONTEMPORARY SCHEME - SIDE ELEVATIONS
ASK.4	CRAFTSMAN SCHEME - FRONT & REAR ELEVATIONS
ASK.5	CRAFTSMAN SCHEME - SIDE ELEVATIONS
ASK.6	RANCH SCHEME - FRONT & REAR ELEVATIONS
ASK.7	RANCH SCHEME - SIDE ELEVATIONS
ASK.8	PRAIRIE SCHEME - FRONT & REAR ELEVATIONS
ASK.9	PRAIRIE SCHEME - SIDE ELEVATIONS

CONTEMPORARY BUILDING STYLE



MASONRY: CHASKA BRICK

ENTRANCE DOOR
SHERWIN WILLIAMS: SLATE TILE (SW 7624)

OVERHEAD DOOR
SHERWIN WILLIAMS: EXTRA WHITE (SW 7006)

TRIM COLOR
SHERWIN WILLIAMS: EXTRA WHITE (SW 7006)
JAMESHARDIE: ARCTIC WHITE

SIDING 3: FLAT PANEL
SHERWIN WILLIAMS: DORIAN GRAY (SW 7017)
JAMESHARDIE: PEARL GRAY

SIDING 2: BOARD & BATTON
SHERWIN WILLIAMS: CLASSIC FRENCH GRAY (SW 0077)
JAMESHARDIE: GRAY SLATE

SIDING 1: LAP SIDING
SHERWIN WILLIAMS: SLATE TILE (SW 7624)
JAMESHARDIE: EVENING BLUE



SHINGLE 1: TAMKO
WEATHERD WOOD

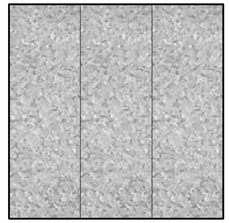

METAL ROOF 1: PAC CLAD
GALVALUME

CRAFTSMAN BUILDING STYLE

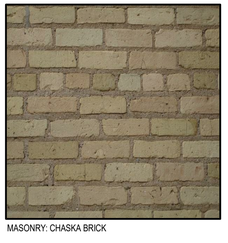

MASONRY: CHASKA BRICK

ENTRANCE DOOR
SHERWIN WILLIAMS: CARRIAGE DOOR (SW 7594)

OVERHEAD DOOR
SHERWIN WILLIAMS: ROYCROFT BRONZE GREEN (SW 2846)
JAMESHARDIE: AUTUMN TAN

TRIM COLOR
SHERWIN WILLIAMS: ROYCROFT BRONZE GREEN (SW 2846)
JAMESHARDIE: AUTUMN TAN

SIDING 3: FLAT PANEL
SHERWIN WILLIAMS: EXTRA WHITE (SW 7006)
JAMESHARDIE: ARCTIC WHITE

SIDING 2: BOARD & BATTON
SHERWIN WILLIAMS: EXTRA WHITE (SW 7006) &
DORIAN GRAY (SW 7017)
JAMESHARDIE: PEARL GRAY &
ARCTIC WHITE

SIDING 3: LAP SIDING
SHERWIN WILLIAMS: ROYCROFT BRONZE GREEN (SW 2846)
JAMESHARDIE: AUTUMN TAN

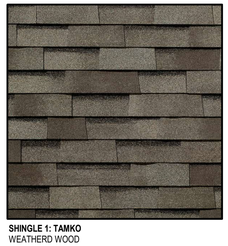

SHINGLE 1: TAMKO
WEATHERD WOOD

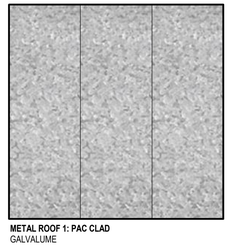

METAL ROOF 1: PAC CLAD
GALVALUME

RANCH BUILDING STYLE



MASONRY: CHASKA BRICK

ENTRANCE DOOR
SHERWIN WILLIAMS: WOOL SKEIN (SW 6148)

OVERHEAD DOOR
SHERWIN WILLIAMS: BASKET BEIGE (SW 6143)

TRIM COLOR
SHERWIN WILLIAMS: WOOL SKEIN (SW 6148)
JAMESHARDIE: COBBLESTONE

SIDING 3: FLAT PANEL
SHERWIN WILLIAMS: BASKET BEIGE (SW 6143)
JAMESHARDIE: MONTEREY TAUPE

SIDING 3: BOARD & BATTON
SHERWIN WILLIAMS: ROYCROFT BRONZE GREEN (SW 2846)
JAMESHARDIE: AUTUMN TAN

SIDING 1: LAP SIDING
SHERWIN WILLIAMS: BASKET BEIGE (SW 6143)
JAMESHARDIE: MANTERY TAUPE



SHINGLE 1: TAMKO
WEATHERD WOOD

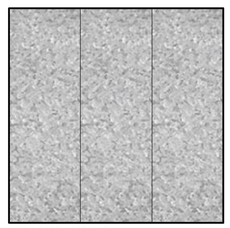

METAL ROOF 1: PAC CLAD
GALVALUME

PRAIRE BUILDING STYLE

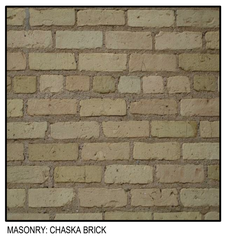

MASONRY: CHASKA BRICK

ENTRANCE DOOR
SHERWIN WILLIAMS: COPPER MOUNTAIN (SW 7356)

OVERHEAD DOOR
SHERWIN WILLIAMS: ROYCROFT BRONZE GREEN (SW 2846)

TRIM COLOR
SHERWIN WILLIAMS: WOOL SKEIN (SW 6148)
JAMESHARDIE: COBBLESTONE

SIDING 3: FLAT PANEL
SHERWIN WILLIAMS: ROYCROFT BRONZE GREEN (SW 2846)
JAMESHARDIE: AUTUMN TAN

SIDING 2: BOARD & BATTON
SHERWIN WILLIAMS: DOWNING STONE (SW 2821)
JAMESHARDIE: HERB GARDEN

SIDING 1: LAP SIDING
SHERWIN WILLIAMS: DOWNING STONE (SW 2821)
JAMESHARDIE: HERB GARDEN



SHINGLE 1: TAMKO
WEATHERD WOOD

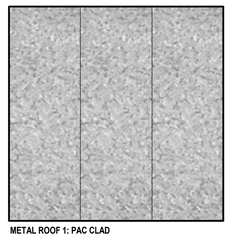

METAL ROOF 1: PAC CLAD
GALVALUME

Copyright © 2017 Kahler Slater, Inc. All rights reserved.

Kahler Slater

CONTINENTAL PROPERTIES
SPRINGS AT McKNIGHT LAKE

COVER SHEET

ASK.1 | 10/01/2021

CONTINENTAL PROPERTIES



2 REAR ELEVATION
1/8" = 1'-0"

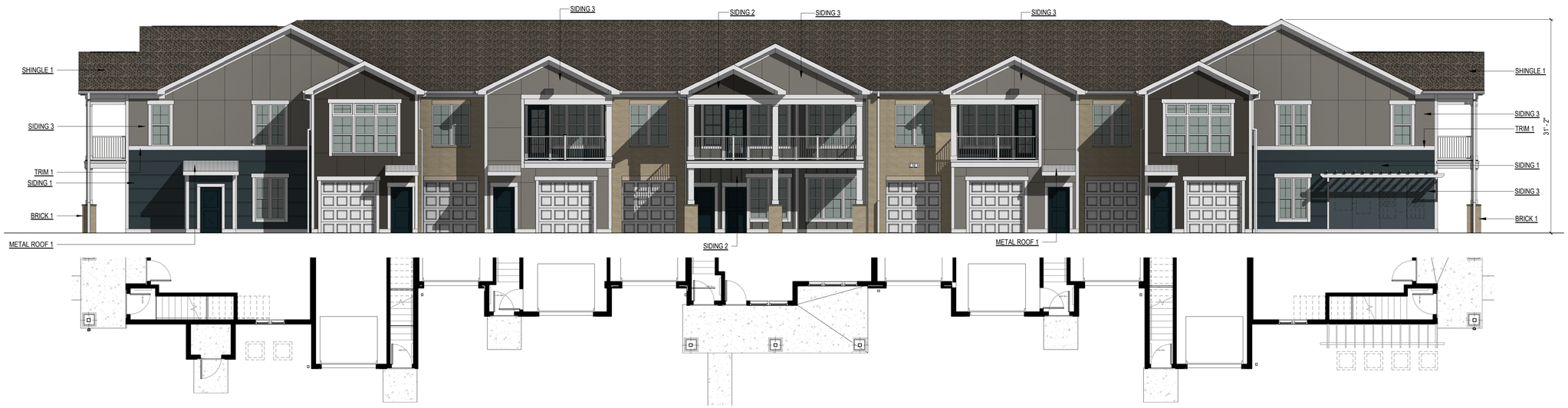

1 FRONT ELEVATION
1/8" = 1'-0"

CONTEMPORARY SCHEME - FRONT & REAR ELEVATIONS

Copyright © 2017 Kahler Slater, Inc. All rights reserved.

Kahler Slater

CONTINENTAL PROPERTIES
SPRINGS AT McKNIGHT LAKE

ASK.2 | 10/01/2021

CONTINENTAL PROPERTIES



2 LEFT ELEVATION - PRESENTATION
1/8" = 1'-0"



1 RIGHT ELEVATION - PRESENTATION
1/8" = 1'-0"

CONTEMPORARY SCHEME - SIDE ELEVATIONS

Copyright © 2017 Kahler Slater, Inc. All rights reserved.

Kahler Slater

CONTINENTAL PROPERTIES
SPRINGS AT McKNIGHT LAKE

ASK.3 | 10/01/2021

CONTINENTAL PROPERTIES



2 REAR ELEVATION
1/8" = 1'-0"

1 FRONT ELEVATION
1/8" = 1'-0"

CRAFTSMAN SCHEME - FRONT & REAR ELEVATIONS

Copyright © 2021 Kahler Slater, Inc. All rights reserved.

Kahler Slater

CONTINENTAL PROPERTIES
SPRINGS AT McKNIGHT LAKE

ASK.4 | 10/01/2021

CONTINENTAL PROPERTIES



2 LEFT ELEVATION
1/8" = 1'-0"



1 RIGHT ELEVATION
1/8" = 1'-0"

CRAFTSMAN SCHEME - SIDE ELEVATIONS

Copyright © 2021 Kahler Slater, Inc. All rights reserved.

Kahler Slater

CONTINENTAL PROPERTIES
SPRINGS AT McKNIGHT LAKE

ASK.5 | 10/01/2021

CONTINENTAL PROPERTIES



2 REAR ELEVATION
1/8" = 1'-0"

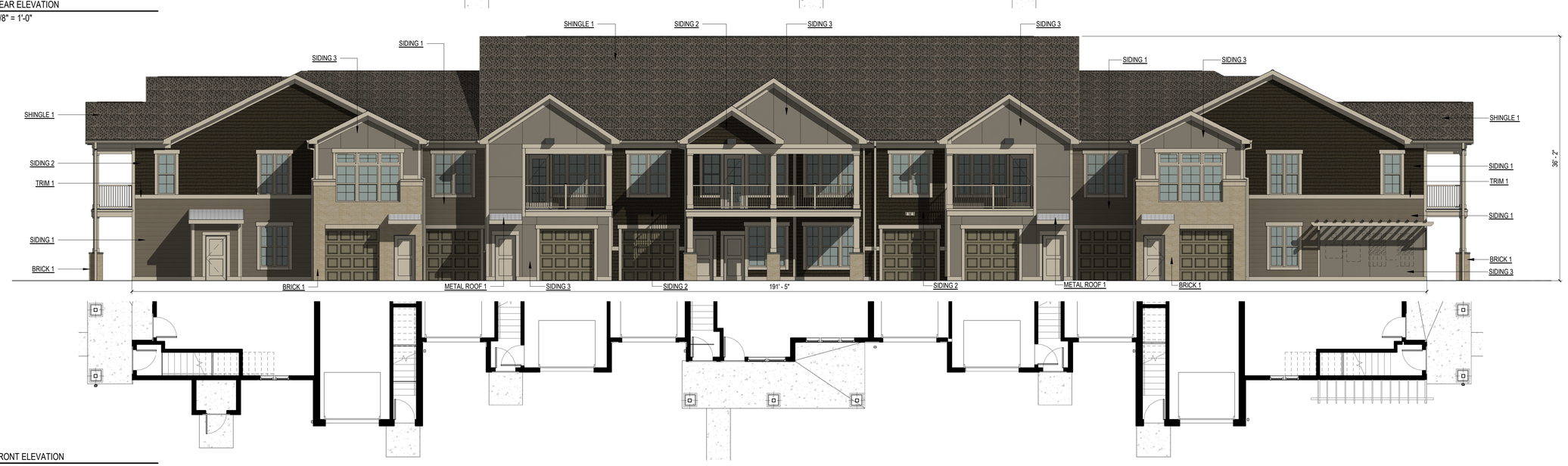

1 FRONT ELEVATION
1/8" = 1'-0"

RANCH SCHEME - FRONT & REAR ELEVATIONS

Copyright © 2021 Kahler Slater, Inc. All rights reserved.

Kahler Slater

CONTINENTAL PROPERTIES
SPRINGS AT McKNIGHT LAKE

ASK.6 | 10/01/2021

CONTINENTAL PROPERTIES

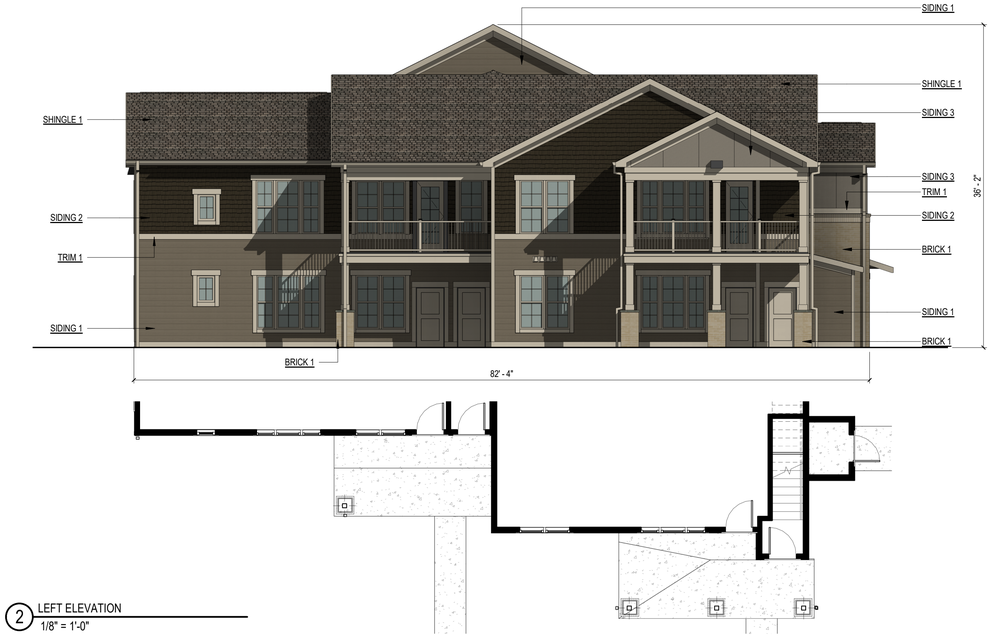

2 LEFT ELEVATION
1/8" = 1'-0"

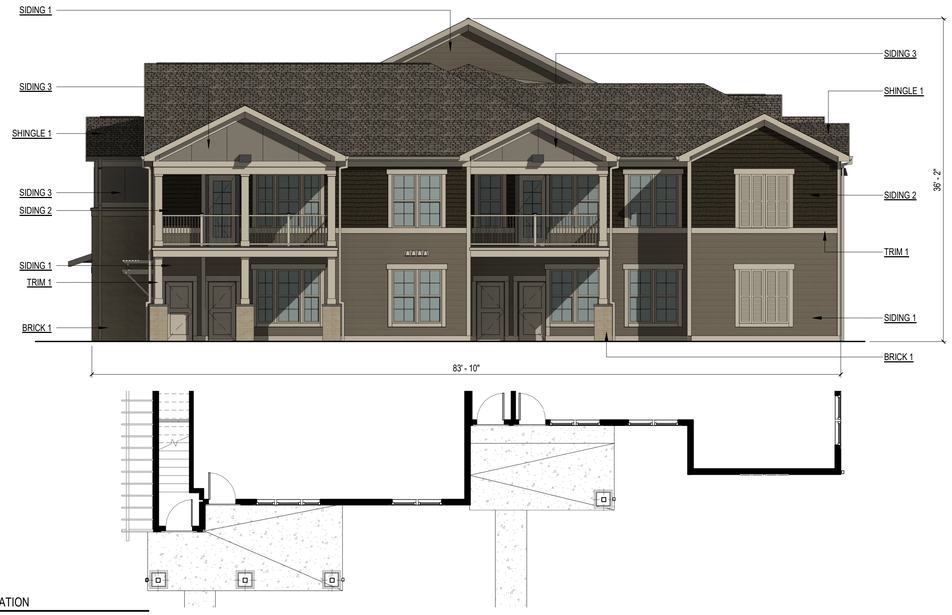

1 RIGHT ELEVATION
1/8" = 1'-0"

RANCH SCHEME - SIDE ELEVATIONS

Copyright © 2021 Kahler Slater, Inc. All rights reserved.

Kahler Slater

CONTINENTAL PROPERTIES
SPRINGS AT McKNIGHT LAKE

ASK.7 | 10/01/2021

CONTINENTAL PROPERTIES

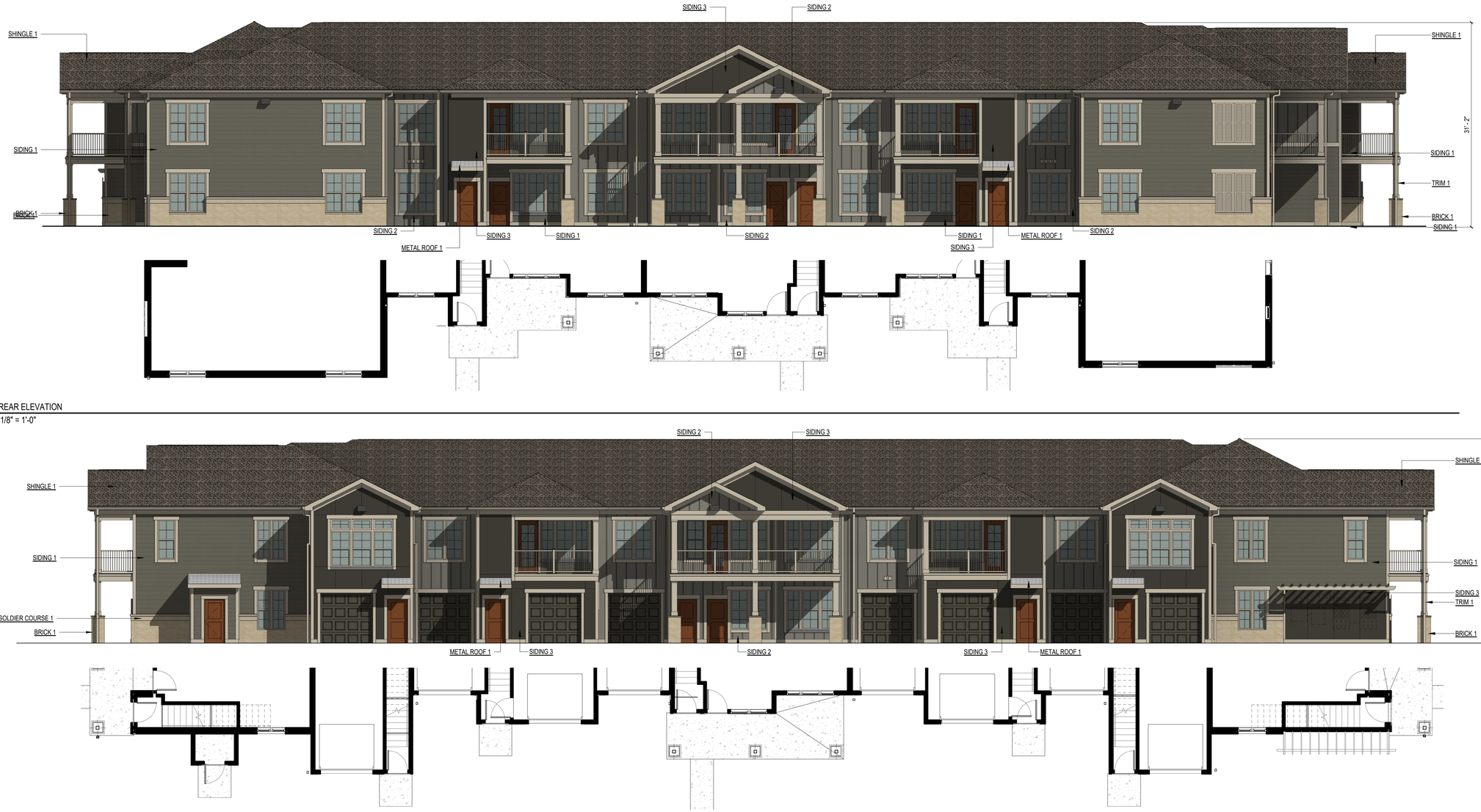

2 REAR ELEVATION
1/8" = 1'-0"

1 FRONT ELEVATION
1/8" = 1'-0"

PRAIRIE SCHEME - FRONT & REAR ELEVATIONS

Copyright © 2021 Kahler Slater, Inc. All rights reserved.

Kahler Slater

CONTINENTAL PROPERTIES
SPRINGS AT McKNIGHT LAKE

ASK.8 | 10/01/2021

CONTINENTAL PROPERTIES

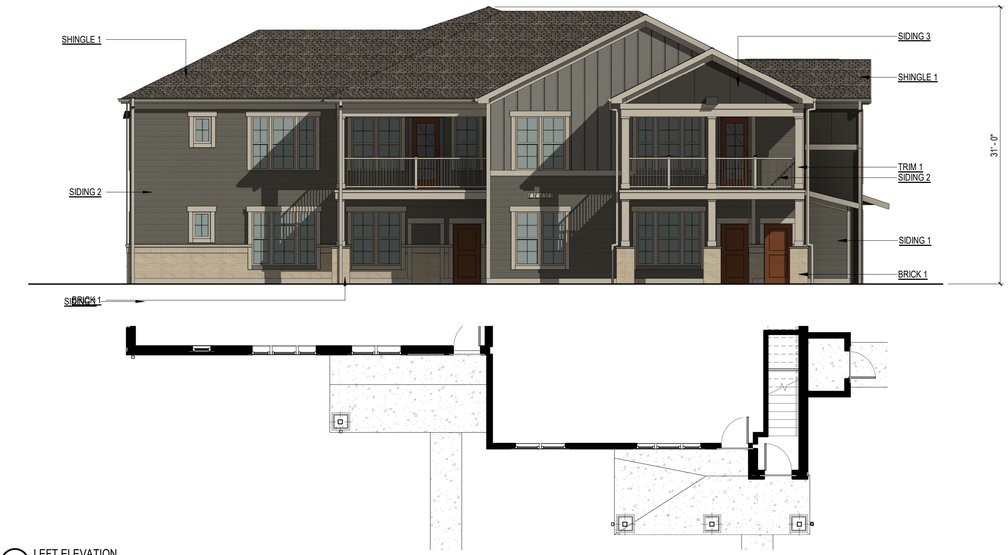

2 LEFT ELEVATION
1/8" = 1'-0"

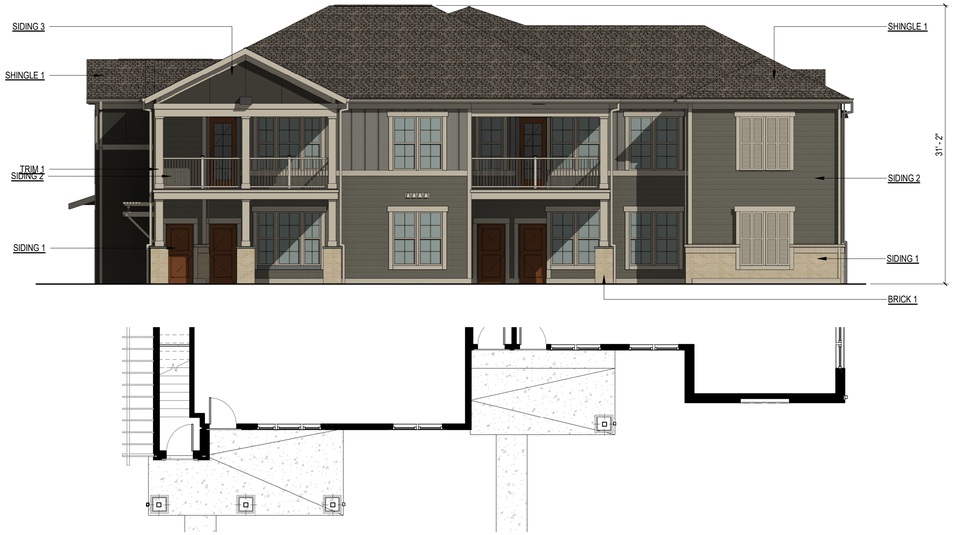

1 RIGHT ELEVATION
1/8" = 1'-0"

PRAIRIE SCHEME - SIDE ELEVATIONS

Copyright © 2021 Kahler Slater, Inc. All rights reserved.

Kahler Slater

CONTINENTAL PROPERTIES
SPRINGS AT McKNIGHT LAKE

ASK.9 | 10/01/2021

CONTINENTAL PROPERTIES

REQUEST FOR ACTION
CHASKA PLANNING COMMISSION
06/08/2022

Subject: **CONTINUED FROM MAY 11, 2022 PLANNING COMMISSION: Guardian Angels School & Convent Building and Block 42 – Concept Plan**

Applicant: Community Asset Development Group

Location: 201, 207, 213 & 215 2nd Street West and 115 Pine Street North; west of Cedar Street, east of Pine Street, south of 2nd Street W, and north of 1st Street W for all of Block 42 of downtown Chaska

Case No.: 2022-30

Synopsis: Applicant seeks to obtain approval of a concept plan for multi-family residential in the existing Guardian Angels school building, office/storage in the existing Guardian Angels convent building, community gathering space in the existing gym space, and 3 new single-family lots on the southeast block for all of Block 42 in downtown Chaska

Prepared By: Elizabeth Hanson

Staff Recommendation: Motion to recommend approval

BACKGROUND

The west half of Block 42 is encompassed by the existing Guardian Angels school, convent, and gym buildings (213 & 215 2nd Street West). The Guardian Angels school was built in 1913 and the convent building was built in 1916. They are both constructed from red brick, however, they both have some Chaska brick in the interiors. The school building has exclusively been used by Guardian Angels school since its conception. Because of declining enrollment in the school, Guardian Angels parish elected to close the school in 2021 and put the parish owned property south of 2nd street on the market. The convent building, was also used by the school and in earlier years housed the nuns that taught at the school. It is currently being used as church offices. Both the school and convent buildings are local historic resources in Chaska.

The gym addition on the southside of the school building was constructed around 1956. It is not deemed historic.

The east half of Block 42 is encompassed by 3 private residences, plus the Guardian Angels school yard. One residence (207 2nd Street West) is owned by Guardian Angels. The other two are privately owned, however, the developer has agreements with each property owner should a redevelopment plan move forward.



CHANGES SINCE MAY 11, 2022 PLANNING COMMISSION

At the May 11, 2022 Planning Commission meeting the Block 42 Concept Plan was tabled with the request to work on several items of the plan before coming back. Those items were as follows:

- Parking to meet residential uses on site
- Working with the scale of the new buildings with the existing buildings on and near the site
- Refine the gym use/user
- Work to set up a neighborhood meeting with representatives of the neighborhood

The applicant has made the final changes in their updated Concept Plan:

- Parking was revised to meet the residential uses on site
- Removed the 44 unit apartment building and 7 unit townhome building; replaced the 44 unit site with 3 single-family lots
- Provided more information surrounding the gym user; the gym use would have 3 main purposes:
    - School activities
    - Church gatherings
    - Community activities, particularly youth sports (practices, games)

  The developer has also identified 3 priority users with the above uses; Guardian Angels Church, Chaska Junior Olympic Volleyball, and Chaska Youth Basketball Association. The end user/property owner would be identified prior to preliminary submittal.
- Held another neighborhood meeting on Thursday, June 2 to go over the updated plan

The original concept plan envisioned removing two residential structures on the northeast side of the site for 7 townhomes and converting the southeast portion of the block to a 44-unit

market rate apartment. Because of the challenges in meeting the required parking and open space requirements along with changing economics for the project, the two structures on the northeast side will now remain.

PUBLIC ENGAGEMENT

The following has been done up to this meeting in terms of public notification and involvement:

- May 6, 2022 Developer Led Neighborhood Meeting; the developer was provided a mailing list from the City to notify neighbors of this meeting (however it was stated by the developer that they only notified the property owners that were directly adjacent to the block, and did not use the full mailing list provided by staff)
- May 11, 2022 Planning Commission Meeting; the City notified all property owners within 350 feet of the subject site. The project was tabled at this meeting to be reviewed at the June 8, 2022 Planning Commission meeting.
- June 2, 2022 Developer Led Neighborhood Meeting: the developer used a mailing list to provide notice to the neighbors of the updated project (it is unknown what mailing list was used)
- June 8, 2022 Planning Commission Meeting; the City notified all property owners within 350 feet of the subject site of the continuation of the project.

R-2 & COMPREHENSIVE PLAN

The property is zoned as R-2 (Medium Density Residence).

The 2040 Comprehensive Plan guides the subject property as Public/Semi Public for the west half and southeasterly portion of Block 42, and Medium Density Residential for the northeasterly portion. The Public/Semi Public designation in the Comprehensive Plan is designed to create *lots or parcels guided for public, semi-public and private educational facilities, places of worship, hospitals, convalescent homes, penal facilities, and facilities of local, state, and federal governments*. The Medium Density Residential designation in the Comprehensive Plan is designed to create *lots or parcels guided for single-family attached dwellings, manufactured housing parks and mid-rise multiple-family housing such as apartments and condominiums. Density range allowed is six (6) to 11 dwelling units per net acre including local access streets*.

It would appear that the Comprehensive Plan designations may have to change with this block. When the Comprehensive Plan was adopted it was done in the matter of the school use remaining. Now that the school use has permanently ended, the guidance for the property is no longer consistent, and the probability of having another school use occupy the building is unlikely. Re-guiding the entire block would also be the most efficient.

The 2040 Comprehensive plan references the Downtown Master Plan that was adopted in 2012 as it relates to the goals, visions, and overall land use of Downtown Chaska. The goals, vision, and land use guidance of the Downtown Master Plan informs the evaluation of Block 42.

DOWNTOWN MASTER PLAN

In 2012, the City approved the Chaska Downtown Master Plan. This plan lays out a downtown vision, guiding principles, downtown destinations & connections concepts, land use plan map, market positioning objective/strategies/priorities, redevelopment priorities and strategies, and three catalyst redevelopment site concepts. In general, any infill development, redevelopment,

and public space and infrastructure investments should be guided by the Downtown Master Plan.

Downtown Guiding Principles
The Downtown Master Plan has the following guiding principles:

1. Enhance the community's pride and historic sense of place in downtown
2. Reinvigorate the variety and vitality of downtown's main street destinations
3. Create signature community gathering places
4. Preserve and strengthen downtown as the hub for community institutions
5. Expand downtown's role as an employment center
6. Enhance downtown's neighborhoods and housing options
7. Create inviting downtown streets, sidewalks and trails
8. Strengthen downtown partnerships to achieve common goals

Guiding principles #1, and 6 are particularly relevant to the proposal for Block 42, so the full langue describing that principle follows:

1. *Enhance the community's pride and historic sense of place in downtown. Downtown should serve as the community's priority location for major activities, celebrations, and creating a sense of community identity. Downtown's future character and improvements should physically reflect Chaska's unique historic character, traditional small town design and values. Downtown's rich heritage and remaining historic assets should be preserved, enhanced and celebrated as major assets of the revitalized downtown and its unique character. Enhancement of community pride and historic assets will benefit from interpreting and celebrating downtown's unique character and features through public art, wayfinding signage, and heritage preservation. Known as "Minnesota's Brick City", downtown will be revitalized as the physical and visual embodiment of the community's unique heritage of brickmaking and community building. The prevalence of Chaska brick buildings remaining in downtown significantly contributes to a visually unique downtown environment. Chaska brick commercial buildings in downtown are not only of similar scale and form, they are also very similar in color. An important component of downtown's revitalization will be to enhance and expand the unique character of Chaska brick buildings in downtown. Existing Chaska brick buildings should be restored to highlight their Chaska brick character and new buildings should be designed to complement the scale, form and color of Chaska brick buildings. Existing and new buildings will be encouraged to design their storefronts with large window openings, individual street level entrances, and located up to the sidewalk. The focus will be on attracting more retail, restaurant, entertainment and service businesses to both renovated and new street level storefronts.*

6. Enhance downtown's neighborhoods and housing options As the community's oldest neighborhoods, the Downtown East and Downtown West neighborhoods have the strongest small town character. Due to the age of the downtown neighborhoods and that some areas were in the river floodplain in the past, they are ripe for housing reinvestment and neighborhood enhancements. Revitalization of existing housing and addition of new housing options is encouraged to strengthen downtown as a complete neighborhood with desirable housing options and amenities. The City should initiate public improvements and assistance programs that target revitalization of downtown's neighborhoods to become great places to live.

The Downtown Master Plan also states the following under Chapter 5 for Residential Market Opportunities: *Absent a substantial "value premium" for locations in Chaska's historic downtown core, prospective multi-family developers will find it easier and more profitable to build on undeveloped land outside of downtown. In pursuing such development, the City must consider two countervailing factors:*
» Multi-family residential development may offer the best means for creating new street-front retail space.
» On the other hand, as revitalization proceeds, downtown Chaska can gain the "value premium" necessary to support higher-end multi-family development. The City should not preclude such higher-end development by promoting less desirable developments on its prime redevelopment opportunity sites.

Block 42 falls under what is dubbed "Downtown West Neighborhood" under the Downtown Master Plan's Chapter 6: Downtown Districts and Neighborhoods and it states the following: *The future identity of this downtown neighborhood is envisioned as a traditional small town neighborhood that celebrates its historic character, traditional mix of housing styles, connections to the river's natural open spaces, and convenient access to downtown's services and amenities. Building upon the existing mix of activities along Pine Street, future changes along Pine Street may include higher density housing or neighborhood-friendly businesses.*

CONCEPT PLAN
The City has received an application for a Concept Plan to redevelop the Guardian Angels school block (Block 42) in downtown Chaska, which is being proposed by Community Asset Development Group and Carver County CDA. The redevelopment would include the following:

- Redevelop the school building into 22 rental apartment units while preserving the building's exterior architecture (Carver County CDA) (local historic resource)
- Preserve the convent building for office and storage use (Carver County CDA) (local historic resource)
- Utilize the gym as a community gathering space owned either by a governmental entity or community nonprofit (user TBD)
- Redevelop the southeast portion of the block to 3 single-family lots (Community Asset Development Group)

CONSISTENCY WITH THE DOWNTOWN MASTER PLAN
In connection with the Downtown Master Plan's Guiding Principle #1, the concept plan that is proposed seeks to preserve the historic amenities that exist on site by providing new uses that will strengthen their sustainability. Currently the school building sits vacant with the school use coming to an end. The best way to preserve historic buildings is to ensure continued productive use occurs in the buildings.

In connection with the Downtown Master Plan's Guiding Principle #6, the plan shows a proposal that will enhance the housing options that are provided in downtown. Many of the other apartment buildings in downtown are predominantly catered to the senior community (i.e. Auburn Manor, Chaska Zen Apartments , and The Landing). The new apartments proposed on the Block 42 site will bring in a newer housing option catering to those looking for a unique upscale option, which the Downtown Master Plan identifies as a corridor for higher density

housing. Another benefit of an apartment typically generates expendable income. Having expendable income in downtown is good for the economy and surrounding businesses, and as the Master Plan mentions, can create new street-front retail space opportunities.

Project Goals. The applicant stated their project goals as:

- Redevelop the Guardian Angels school block into uses that preserves its historic character and enhances the Chaska downtown
- Preserve Guardian Angels Church as a long-term community gathering place
- Preserve the existing historic buildings with uses that will be viable for the long term while at the same time maintaining the architectural integrity of the buildings
- Maintain the community gather aspects of the existing facilities especially the gymnasium

Site Data

Existing Use:	School/office/gym space/residential
Comprehensive Plan:	Public/Semi Public and Medium Density Residential
Zoning:	R-2
Size:	2 acres
Utilities:	All utilities are available to service property
Road Access:	Pine Street, Cedar Street, 1st Street West, and 2nd Street West

Surrounding Area			
Direction	**Existing Use**	**Comp Plan**	**Zoning**
North	Guardian Angels Church, residential	Public/Semi Public Medium Density Residential	R-2
East	Commercial Residential	Downtown Mixed Use	C-3 & R-2
South	Residential	Medium Density Residential	R-2 & PMD
West	Residential	Medium Density Residential	R-2

Existing Conditions. The property is a fully developed block in downtown Chaska. The Guardian Angels School, Convent and Gym comprise the western half of Block 42. The eastern half contains the Guardian Angels school yard and 3 private residences, one of which is owned by Guardian Angels. Access to the site is from the mid-block alleyway which accesses onto 1st Street West and 2nd Street West. The existing Guardian Angels residence also has access on the mid-block alleyway. The remaining two residences have access on Pine Street North.

The site is served by City water and sanitary sewer. A new set of connections will be required for the apartment with service coming off of First Street. In the mid 1990's the Church with the assistance of the City installed a complete fire sprinkler system in the school, convent and gym. Currently, stormwater is collected in the existing street stormwater systems and flows into the river. With the recent reconstruction of adjacent streets, the City upgraded the storm sewer pipes to accommodate future redevelopment. The topography of the site drops from an

elevation of 732 on the north to 720 on First St to the south. The main portion of the site is relatively flat with the grade change requiring a retaining wall on the south side.

The 4 Uses. For the purposes of review, we will break down the site into the 5 Uses as shown in the Concept Site Plan. The 5 Uses are: **1.**, the existing Guardian Angels school building converted to 22 apartment units; **2.**, the existing Guardian Angels convent building converted to office space; **3.**, the existing Guardian Angels gym space used for community gathering space; and lastly **4.** the 3 single-family lots.

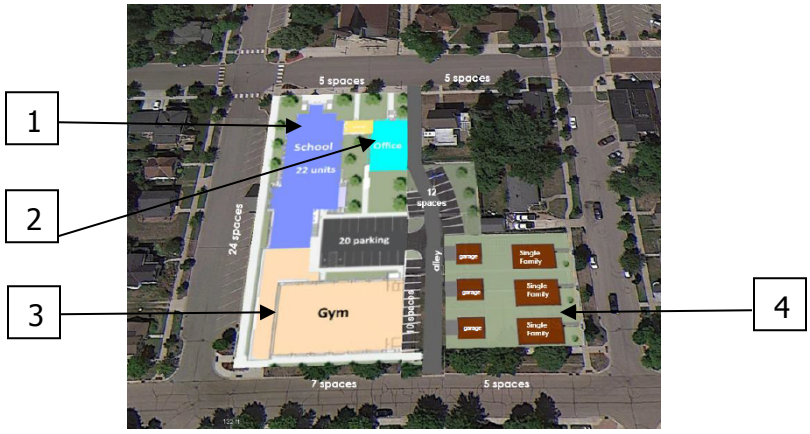

1. ***Guardian Angels School; 22 Unit Apartment Building (Carver County CDA).*** The proposal for the school renovation will be to convert the three floors of classrooms into a mix of studio, 1 and 2 bedroom rental units. The anticipated unit mix is: 3 studios, 9 one bedroom and 10 two bedroom units. Little changes are envisioned for the building exterior. There is possibility that a new front entrance will be required with the basic architectural elements being maintained. New mechanical and electrical systems may be necessary for the rental units. Structurally, the building is in generally good condition and is fully served by a fire sprinkler system.

   The applicant is stating that 32 stalls would be accommodated for this use by the construction of 20 new stalls in the courtyard of the existing school. The remaining 12 stalls are proposed within the alleyway directly adjacent to the courtyard area. In addition to new apartment parking stalls, a garden courtyard area will be developed for use by the residents.

   Staff notes:

   - *<u>Building Design & Materials.</u> The City has certain requirements for the design and materials of multi-family buildings (zoning Section 15.28.120). This is an existing building that is also historically designated, and because of that this ordinance doesn't apply. The goal of this project is to preserve the exterior by all means necessary. There may be some cosmetic/maintenance changes that need to occur, and those will need to be reviewed appropriately by both staff and the Heritage Preservation Commission (HPC).*

- *Usable Open Space. The City has certain usable open space requirements for multi-family residential uses. These spaces need to provide for a level of outdoor recreation, scenic amenities, or space that people can gather in and use. The applicant will have to show in their preliminary submittal how they plan to meet this requirement per our Section 15.28.120.F1.*

- *Parking. At 22 dwelling units, the parking code requires 44 parking stalls (2 per dwelling unit). The site plan is only showing 32 stalls accommodated on site in the courtyard area and alleyway of the block. In recent projects, the City has analyzed other multi-family apartment buildings to meet a one parking stall per bedroom unit requirement. This is stemming from Lake Jonathan Flats, Chaska Place Apartments and recently the Clover Ridge Apartment buildings who all show the same parking provision. In staff's perspective this is an adequate provision for parking. If this formula was applied on this site it would require 32 parking stalls (32 total bedrooms). With their 32-stall provision, they are sufficient in meeting the requirement on-site. The applicant will have to provide details in their preliminary submittal how the 12 parking stalls on the alleyway will be owned and maintained. There are questions on snow removal and designated signage to ensure that these spaces will be readily available for the tenants of the apartment building.*

2. Guardian Angels Convent; Office (Carver County CDA). Located on 2nd Street the convent originally was the home for the 20+ nuns who served the Guardian Angels parish and school. This building was constructed in 1916 and is in generally good condition. Currently, the first and second floors are used by the parish as their parish offices. As with the other church owned buildings on the block, the heating, water and fire protection services are centrally located in the school building, thus creating a separate ownership opportunity is difficult. The vision for this building is to lease the first floor for office space and utilize the upper floors for office user storage. Potential users of the office space would be area non-profits. Parking for the office us would be met by utilizing the existing on street parking on 2nd Street.

Staff notes:

- *Storage Use. The proposal indicates the storage would be a use in the building. The storage use is allowed as long as it is ancillary to the principal use in the building. Or, in essence, is accessory under the primary use. Storage as a singular user would not be permissible.*
- *Outdoor Gathering Place. These office spaces can further be enhanced for their users if outdoor areas are provided on-site. The usable open space areas could be looked at as a shared implementation with the multi-family locating in the school building. The applicant will need to address this in their preliminary submittal.*

- *Parking. The site is composed of a roughly 2,200 square foot building footprint that is two stories tall. The applicant is stating to maintain the first level as office space and that it would be leased out. Today, the building relies solely on on-street parking. There is no proposal to add parking for this building/use. The building size requires 9 parking stalls. As noted below, the proposed office use will need to be further reviewed for parking provisions. Due to the historic nature of the building and site, parking is*

limited. Other office buildings/uses in downtown typically rely on on-street parking (which included the Guardian Angels school and convent building). With this existing historic building that application of parking would be appropriate. The applicant will have to provide a parking analysis of this in the preliminary submittal.

3. Guardian Angels Gym Space; Community Gathering Space. Constructed in 1956, the gymnasium has been both an integral part of the parish and used as a community gathering place. One of the goals for the redevelopment to create agreements whereby the gym can continue to be a gathering place for both the parish and community. The gym space includes not only the athletic floor space, but also a commercial kitchen, stage and restroom facilities. The building is planned to remain intact, although an upgraded HVAC system may be desirable and added locker/changing rooms may be necessary. The building is structurally sound and has been well maintained by the Church. Recently the Church and City partnered to create handicapped access to the building. The gym parking is proposed to be accommodated by on-street parking and 10 off-street stalls on the east side of the building. The vision for the building is to enter into a long-term lease with a public entity or local nonprofit to manage the facility as a venue for youth sport organizations and to be a facility for other community gatherings including parish related activities. The applicant has stated that they have 3 priority users contemplating the ownership of the gym; Guardian Angels Church, Chaska Junior Olympic Volleyball or Chaska Youth Basketball Association. The goal would be that there is one owner and it could be used by them and other interested parties for school activities, church gatherings, and community activities for youth sports.

Staff notes:

- *<u>Parking</u>. The building is roughly 9,200 square feet in size. As a gathering/assembly type use it would require 43 parking stalls. 10 stalls will be provided on site for this building. The applicant will have to provide a more defined use of this building at preliminary so that parking can be analyzed appropriately. The proposed gym/gathering use will need to be further reviewed for parking provisions. Due to the historic nature of the surrounding buildings and site, parking is limited. Other institutional uses in downtown typically rely on on-street parking (which included the Guardian Angels school and convent building). With this existing building that application of parking would be appropriate. The applicant will have to provide a parking analysis of this in the preliminary submittal.*

- *<u>End User & Uses</u>. The City was approached by the developer in hopes of the City wanting to be an end-user for the gym space. It was looked at by City Staff for potential park and recreation space or programming space for City activities. The commissioned a facility needs analysis by RJM to evaluate costs of transitioning the building to a standalone building separate from the school building and costs to bring the building into compliance with City standards for a Parks & Rec facility. The analysis identified over $2 million in building improvement costs. Presently, the City has significant building improvement needs that are actively being evaluated for its Municipal Services Building, City Hall, Public Safety Facilities, Library, and Community Center. With these needs in mind, staff will be recommending to the Parks & Recreation Commission*

not to proceed with obtaining the GA Gym facility at the Commission's May 10th meeting. The Park Board agreed with staff's recommendations.

As noted before the developer has identified 3 potential end users of the gym. These users would receive priority in scheduling. Once the priority users are scheduled, gym space would be made available to other organizations on a first come, first serve basis. Other potential users would be youth baseball, youth softball, youth organizations outside of Chaska, Chaska Cubs, adult basketball or volleyball and private parties. The developers anticipates the gym would be rented on weekdays from 6:00pm to 10:00pm and from 8:00am to 10:00pm on weekends. Daytime use during the weekdays is anticipated to be limited and will be more focused on adult activities such as potentially basketball, pickleball or fitness classes. Another daytime use that is being explored is a pre school and after school program for grade school age students whose parents' work.

Separate from the gym is the commercial kitchen. One use will be using the commercial kitchen for meal and food preparation for programs such as meals on wheels, meal distribution and an on-site weekly free meal. Although the facility has a large commercial kitchen, certain upgrades will be required to bring it up to code. The upgraded kitchen will be of significant value to the Church as they wish to continue the historic uses such as Friday fish fries, pancake breakfasts and Beef and Sausage Dinners.

Use of the gym for the youth organizations will be the primary driver of parking demand. For youth volleyball the facility can accommodate two volleyball courts and assuming 12 players and coaches per team, 48 persons will be participating when volleyball is utilizing the courts. For basketball the facility can accommodate two small courts resulting in a similar number of participants.

According to the developer, prior to submitting plans for preliminary site and building approvals, definitive agreements on the gym ownership and uses will be in place and shared with the City.

4. ***3 Single Family Lots.*** Located on the southeast portion of the site is the existing school yard. As a second phase of the redevelopment, this school yard would be removed and replaced with 3 single-family lots. The homes would be designed to have 2 parking spaces per unit with detached parking garages. Parking would access from the rear through the alleyway. The new two-story homes would be designed to be architecturally compatible with the traditional homes in the neighborhood incorporating front porches with a rear garages accessing off the alley. Lot widths proposed would be 40 feet wide by 120 feet deep. Setbacks proposed are 5 feet side yard setbacks with 15 feet front yard setbacks. Rear yard setbacks were not identified.

   Staff notes:

   - *<u>Setbacks & Lot Widths.</u> The applicant is requesting setbacks and lot widths that are below the R-2 zoning requirements, which this site and most of the downtown residential lots are zoned. R-2 zoning requires 20 foot front, 20 foot corner, 5 foot side, and 25 foot rear setbacks. Accessory buildings require 20 foot front, 20 foot corner, 5*

foot side, and 5 foot rear setbacks. The R-2 zoning also requires a minimum lot width of 60 feet. It is typical in downtown that the lots vary in terms of lot width and setbacks; not all lots meet minimum requirements for the R-2 zoning district however these homes have been in existence for many years. The applicant is proposing minimum requirements that are different from the R-2 district, but have not provided specific analysis as to the reasoning of such other than that they believe they are generally consistent with existing homes in the neighborhood. Staff would advise that R-2 zoning district minimums be met or that the applicant provide a more thorough analysis of this setback and lot width deviation in their preliminary submittal if further advised by Planning Commission and City Council.

- *Parking. At 3 dwelling units, the parking code requires 6 parking stalls (2 per dwelling unit). The site plan is showing that each dwelling would be able to accommodate that with the proposed two-stall garages.*

Parking, Access & Traffic.
48 on-site parking spaces are proposed as a part of this site plan. The following chart summarizes the overall parking demand on the site, based on the approximated sizes of the conceptual uses.

Uses	Approx. Size	Code Req.	Est. Parking Req.
Multi-Family	22 units (32 bedrooms	1ps/bedroom	32 parking spaces
Single-Family	3 units	2ps/dwelling unit	6 parking spaces
Office	2,200 sf	1ps/250 sf	9 parking spaces
Gym Space	9,200 sf	12ps + 1ps/300 sf	43 parking spaces
		REQUIRED	**90 parking spaces**
		PROVIDED	**48 parking spaces**

The table shows that the site plan is not meeting the parking requirements for the proposed uses (42 stall deficiency). The office and gym space are the only uses that do not show adequate on-site parking. The residential uses are sufficient. It will be important in the preliminary to understand the end use of the gym space to properly determine parking needs. It should be noted that downtown approaches parking a little differently than other areas in the City due to its historic, compact and pedestrian oriented nature. For example, the C-3 zoning district allows for up to a 75% reduction in parking requirements for Commercial, Office, and Institution type uses. Because of this and due to the historic nature of the Guardian Angels site, it would be appropriate to consider lesser standards to the proposed Office and Gym/Gathering uses as they are located in existing buildings in downtown. Parking flexibility can be considered as the applicant further defines the intended uses of these facilities and parking demand that will be expected from them. Context of the surrounding residential uses will also be important in determining the most appropriate parking solution for this proposal. This approach would be consistent with other existing commercial, institution and office uses in downtown that rely heavily on on-street parking to support their uses. Of note, any changes to the existing on street parking configuration (ie. conversion of parallel spaces to perpendicular spaces) will need to be evaluated with the City engineer for feasibility and compatibility with the street layout and neighboring properties, particularly due to the grade changes that exist

around the block. This same exception would not apply to the residential uses proposed. The residential uses shall provide their own on-site parking meeting parking requirements.

The concept plan is also showing on-street parking stalls around the edge of the block. It appears there is a total of roughly 56 existing on-street parking stalls that directly abut the edges of this block.

There are two proposed site accesses from the existing alleyway access off of 1st Street West and 2nd Street West. The alleyway is shown to be realigned so that on site parking can be accommodated for the gym and apartment sites. It will be important in the preliminary for the developer to indicate the owner of the alleyway and who will be maintaining it as 22 parking stalls will be accessed from it. There are questions surrounding the accessibility these stalls will have specifically in the winter time when snow removal is common.

Setbacks. Proposed buildings and parking shall meet the following setbacks:

BUILDING SETBACKS	
Direction	**Setback**
Front	20 feet
Side, interior	5 feet
Side, corner	5 feet
Rear	25 feet

PARKING SETBACKS	
Direction	**Setback**
Interior Property Lines	5 feet
Property Lines Abutting ROW or residential	10 feet

Freestanding signs are required to be setback at least 10 feet from all property lines.

Utilities & Stormwater. Water and sewer are available to serve the site. It will be important to understand each use's proposed impact on the sewer capacity as well. The project's storm water design will have to meet the City's and Carver County Water Management's requirements.

Lighting. Lighting will have to meet the City's lighting ordinance (Section 15.28.250). Fixtures used will have to be downcast and fully shield. A photometric plan and proposed lighting specs will need to be submitted during preliminary submittal for all lots.

Parkland and Parks & Recreation Commission. The area which makes up this Concept Plan does not contain areas required for city parks per the Comprehensive Plan or Downtown Master Plan. The Comprehensive Plan and Downtown Master Plan both indicate that there is a park search area defined on the west side of Highway 41, which the Parks and Recreation Commission will review. The developer will be responsible for paying park dedication fees during the platting process.

The Parks and Recreation Commission reviewed this concept plan at their May 10, 2022 meeting. The discussion focused on the developer's request that the City obtain and operate the existing GA Gym facility. The Parks and Recreation Commission aligned with staff's recommendations to not pursue the gym facility. They also indicated that the park search area be focused on Hickory Park for potential revisions.

Sidewalks & Trails. The block currently contains sidewalks on all edges of the block. These sidewalks will remain with the proposed project. One major change to the block will occur within the alleyway. The alleyway is shown to be realigned to accommodate more parking on site. The developer should look at ways to enhance the pedestrian connections on site by exploring concepts from other 'Paseo' projects in downtown.

There are no public trails proposed or planned for this block per the Comprehensive Plan and Downtown Master Plan.

Screening & Landscaping. Because this development abuts residential, it will be important to provide adequate screening and landscaping along the edges of the site that are being redeveloped (primarily near the new parking areas). Beneficially the parking areas are oriented in the center of the block so screening will primarily be achieved by the existing and proposed buildings. The developer should further evaluate the edges of the parking areas to mitigate any headlight glare into neighboring properties. The other open areas of the site shall be enhanced appropriately and per zoning code Section 15.28.070.

Development Costs (Infrastructure Improvements)
The City of Chaska has a number of area-wide development cost such as, but not limited to:

- New Signal/Lane Improvements
- Storm Sewer
- Trails
- Parks

Prior to final platting, the developer will need to work with City Staff to determine which of these are applicable and what those fees will be.

Heritage Preservation Commission May 3, 2022
The HPC conducted a meeting on Tuesday, May 3rd to informally review the Concept Plan for Block 42. The comments provided pertained to the careful consideration of the new buildings and how they fit in with the overall area in terms of massing, scale, design, etc.

Neighborhood Meeting May 6, 2022 and June 2, 2022
The developer conducted a neighborhood meeting on May 6, 2022 to introduce the concept plan. The developer indicated that people wish to see the historic buildings preserved, but there are concerns with traffic, density and overall fitting into the context.

The developer also conducted a neighborhood meeting on June 2, 2022 to introduce the revised concept plan. The developer stated that 7 people attended this meeting and were favorable of the new changes.

Deadline for Agency Actions. The City of Chaska received the complete application for this request on Friday, April 22, 2022. Pursuant to Minnesota State Statutes the City must act on this request by **Tuesday, June 21, 2022 (60 days)**, unless the City provides the petitioner with written reasons for an additional 60-day review period. The additional review period would extend to Saturday, August 20, 2022. The City may with the petitioner's consent extend the review period beyond the Saturday, August 20, 2022 date. Lastly, if the City denies the petitioners request "… it must state in writing the reasons for the denial at the time it denies the request."

PLANNING COMMISSION ACTION REQUESTED:

Motion to recommend to City Council approval of the Concept Plan for Guardian Angels School & Convent Buildings and Block 42, subject to the following conditions:

1. **Approvals shall be based on the following graphic exhibits:**
    a. **Concept Plan (pgs 1-14), submitted by Community Asset Development Group**
2. **Adherence with the City Engineer's Memo dated May 11, 2022.**
3. **Creation of a high-quality outdoor gathering space for the office use and to be shown at preliminary submittal.**
4. **Provision that the storage use is ancillary to the principal use in the convent building.**
5. **Provision that a definitive agreement, end user/owner, and defined uses occupying the gym space to be specifically defined at preliminary submittal.**
6. **Adherence to the City's Boulevard Tree Policy and local street section design.**
7. **Prior to final plat approval, developer shall enter into an agreement with the City for the provision of necessary infrastructure and associated development costs.**
8. **Provision of a storm water management plan meeting City and Carver County WMO standards.**
9. **Provision that Planting Islands Section 15.28.070.E4 will be met.**
10. **Provision that all multi-family uses meet Usable Open Space Section 15.28.120.F1. and be addressed at preliminary submittal.**
11. **Provision of a parking analysis be provided for the gym and office uses on where parking stalls will be accommodated, and to be submitted at preliminary submittal.**
12. **Provision that Section 15.28 Special Regulations of the zoning ordinance is complied with in full.**
13. **Provision to further explore 'paseo' concepts through the site and to be addressed at preliminary submittal.**
14. **Provision to further evaluate screening along the edges of the site and parking areas, and to be addressed at preliminary submittal.**
15. **Provision to provide a more detailed analysis of the 12 apartments parking stalls on the alleyway in terms of ownership/maintenance, snow removal,**

and designated signage, and to be addressed at preliminary submittal.

16. **Provision to provide a more detailed analysis of the alleyway and who will be owning/maintaining it, and to be addressed at preliminary submittal.**
17. **Provision of a detailed analysis of the lot width and setback provisions for the site and the reasoning of such, and to be addressed at preliminary submittal.**
18. **Provision that the single-family homes meet R-2 zoning standards.**

City of Chaska
Memorandum

To: **Planning Commission**
From: **Matt Clark, City Engineer**
Date: **May 11th, 2022**
Subject: **Guardian Angels Block 42 Redevelopment – Assisted Living Concept Plan**

The concept plan development of the new site proposes a number of changes in uses and buildings over the site and assumes changes with adding diagonal parking to streets that currently allow for only parallel. If on-street parking is pursued, a comprehensive review of the overall streets will be necessary to fully understand the impacts with the preliminary design process. The developer should be aware that providing diagonal parking along First Street was considered previously at the request of the Church with the downtown street program. However, due to the impacts to the gym stairs, and entrance this option was found not feasible. The diagonal parking along Pine Street needs to be further vetted since the street was designed for parallel parking and is restricted by retaining walls that would allow for angled parking. To consider adding diagonal parking may require right of way to allow for the street to be reconfigured and provide sidewalk connections.

As a part of the City's downtown street program upgrades to City utilities have been made that would support this type of redevelopment. Sewer and water utilities surround the site and are available however services are not configured in a way to serve the proposed uses. Numerous street cuts may be needed to properly allow for sewer and water services to the proposed uses which are far in excess of what exists today, and full street reconstruction of certain street sections would need to be considered. A comprehensive stormwater analysis that includes the public system would be in order with the preliminary design as the sight is being intensified. The next step with preliminary design in regard to layout, right of way, setbacks, street configurations, sidewalks and utilities should continue to be coordinated with City staff.

ONE CITY HALL PLAZA/CHASKA, MN 55318-1962/PH: (952) 448-2851/ FX: (952) 448-9300

GUARDIAN ANGELS SCHOOL REDEVELOPMENT CONCEPT PLAN



Community Asset Development Group

Overview Community Asset Development Group is proposing to acquire and redevelop the property currently owned by Guardian Angels Parish south of 2nd Street. The Carver County Community Development Agency would own and renovate the building west of the alley and CADG would develop the three homes and facilitate the reuse of the gym and convent..

Project Goals

- *Redevelop the Guardian Angels school block into uses that preserves its historic character and enhance Chaska's downtown*
- *Preserve Guardian Angels Church as a long term community gathering place*
- *Preserve the existing historic buildings with uses that are viable for the long term while at the same time maintaining the architectural integrity of the buildings*
- *Maintain the "community gather" aspects of the existing facilities especially the gymnasium*

Site Because of declining enrollment in the school, Guardian Angle parish elected to permanenting close the school in 2021 and put the church owned property south of 2nd street on the market. The site consists of the following:

- Two story brick convent constructed in 1916 and currently used for church offices
- Three story brick school constructed in 1913
- Single story brick gymnasium and kitchen constructed in 1956
- Playground, open space and interior courtyard
- A church owned single family home on 2nd street that is rented

Also located on the block are two privately owned parcels, a duplex at 201 2ND Street and a single-family home at 115 Pine St.

Neighborhood Context The Guardian Angels Church complex is one of the key activity hubs and community gathering location in downtown Chaska. Historically, small town downtowns developed around small retail, civic buildings and churches which is the case in Chaska. On the north side of 2nd St is the Guardian Angels Church, friary and parish hall. That use in not intended to change. Along Pine street is a large public parking lot, commercial buildings and three single family homes. With the completion of the flood control project in the mid 1990's, redevelopment of land south of First St occurred with the construction of a hotel and the River Bend urban townhome developments. The remaining land on the south side of First St and to the west of the school site on Cedar is single family residential. All of Block 42 is presently zoned R-3 The site is located in the Chaska Downtown Master Plan West Neighborhood. That plan states that *"the future identity of this downtown neighborhood is envisioned as a traditional small-town neighborhood that celebrates its historic character, traditional mix of housing styles, connections to the river's natural open spaces, and convenient access to downtown's services and amenities. Building upon the existing mix of activities along Pine Street, future changes along Pine Street may include higher density housing or neighborhood-friendly businesses."* The Downtown plan further envisions that future development should seek to take advantage of river views. Based on this guidance the proposed redevelopment seeks to preserve the existing character of the neighborhood.

Redevelopment Strategy

The proposed redevelopment will consist of four separate elements

- Redeveloping the school building into 22 rental apartment units preserving the exterior architecture
- Utilize the gym as a community gather place owned by a community nonprofit focused on providing activities for youth
- Preserve the convent for offices on the first floor and storage above
- Redeveloping the southeast portion of the site into three single family lots

The original concept plan envisioned removing the two residential structures east of the alley on 2nd Street for townhouses. Because of the challenges in meeting the required parking and open space requirements along with changing economics for the project, the two structures are now proposed to remain.

Details of each element are provided in greater detail in the remaining portion of our plan.

By providing viable alternative uses for the existing church related buildings, the long-term viability of the Church in downtown Chaska will be maintained.

City Utilities

The site is served by City water and sanitary sewer. A new set of connections will be required for the three homes with service coming off Pine Street.

In the mid 1990's the Church with the assistance of the City installed a complete fire sprinkler system in the school, convent and gym.

The topography of the site drops from an elevation of 732 on the north to 720 on First St to the south. The main portion of the site is relatively flat with the grade change on the south side requiring a retaining wall. Currently, stormwater is collected in the existing street stormwater systems and flows into the river. With the recent reconstruction of adjacent streets, the City upgraded the storm sewer pipes to accommodate future redevelopment.

No significant utility or infrastructure changes are required for the redevelopment.

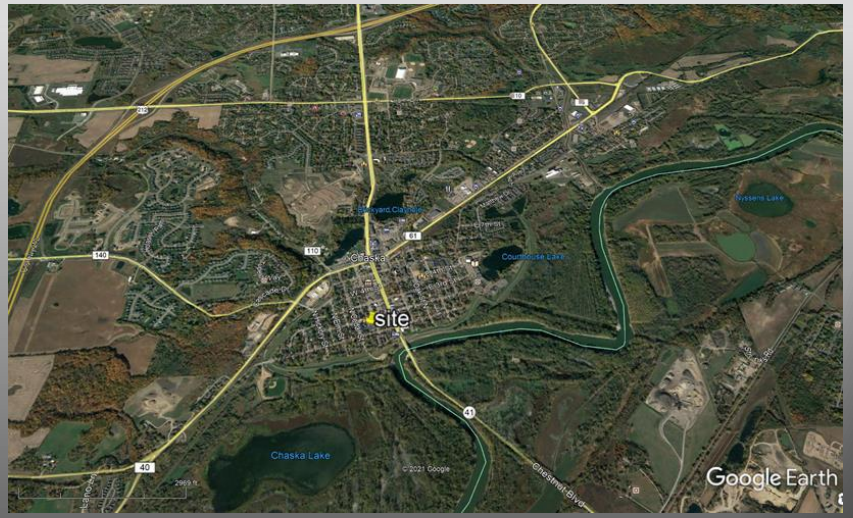

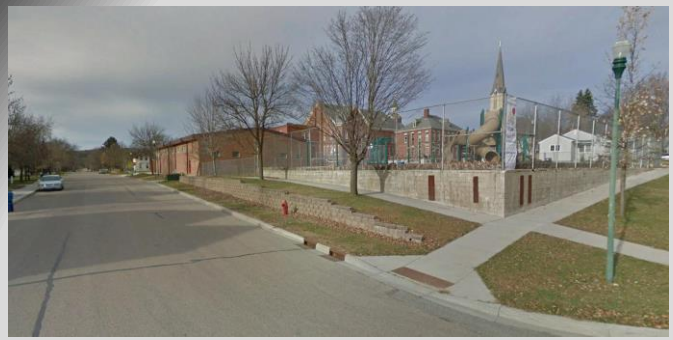






West 1st Street
North Pine Street
North Cedar Street
West 2nd Street







Block 42


2nd St W
1st St W
1st St W
Cedar St N
Pine St N
740'
Carver County GIS

TOPOGRAPHY



Cedar St west



Pine St east



First St looking east



First St looking west

NEIGHBORING PROPERTIES



The basic concept of the master plan is to identify desirable reuses for the existing buildings west of the alley and propose alternative new uses for the land east of the alley. As with any redevelopment, planning for adequate parking is one of the key issues. City staff has indicated that the required parking for each of the uses would be as follows:

School apartments	32 spaces
Covent offices	9 spaces
Gym	43 spaces
Single family	6 spaces
Total required	**90 spaces**

The staff further recommended that the residential parking be accommodated off the street. The concept, as now proposed, meets these criteria.

School apartments	32 spaces off street
Covent offices	9 spaces on street
Gym	10 spaces off street
Gym	36 on street
Single family	6 spaces off street
Total provided	**93 spaces**

To address the requirement for 15% useable opens space, a courtyard area which is currently asphalt will be converted to green space east of the school. The portion of the site allocated to the school/apartment is 20,600 sq ft and the useable open space in the courtyard is 4,600 sq ft or 22%. Detailed plans for the courtyard will be developed in the next phase of planning

MASTER PLAN

A unique aspect of parking demand in the neighborhood relates to paring for church services. To understand this demand, parking usage was monitored for 4 Sundays during Guardian Angels 10:00 service for the month of December. The map to the right depicts the average parking usage in the various parking areas adjacent to the church for these 4 Sundays.



Church parking

The goal of the school renovation will be to convert the three floors of classrooms into a mix of studio, 1 and 2 bedroom rental units. The anticipated unit mix is: 3 studios, 9 one bedroom and 10 two bedroom units.
Little change is envisions for the building exterior. A new front entrance and an elevator will be required with the basic architectural elements being maintained. New mechanical and electrical systems may be necessary for the rental units. Structurally the building is in generally good condition and is fully served by a fire sprinkler system. Based on the PUD requirement of one parking stall per bedroom a total of 32 parking spaces would be required. To the rear of the building 32 off street stalls will be developed with access of the relocated alley A garden courtyard area will be developed for use by residents in the existing courtyard area.

The interior of the building is defined by the high ceilings and numerous windows. By maintaining these characteristics we believe that the renovated units can provide a unique rental experience in Chaska. The target market will be young singles and couples. Rents will be affordable in the range of $1,000 to $1,350/ month.

.





Ground Level



1st Floor



2nd Floor

SCHOOL RENOVATION



EXAMPLES OF SCHOOL TO APARTMENT CONVERSIONS









EXAMPLES OF SCHOOL TO APARTMENT CONVERSIONS

Constructed in 1956, the gymnasium has been both an integral part of the parish as a community gathering place. One of our goals for the redevelopment to create a structure whereby the gym can continue to be a gathering place for both the parish and community. The gym space includes not only the athletic floor space but also a commercial kitchen, stage and restroom facilities. The building is planned to remain intact, although an upgraded HVAC system may be desirable and added locker/changing rooms may be necessary. The building is structurally sound and has been well maintained by the Church. Recently the Church and City partnered to create handicapped access to the building. Required parking for the use is 43 spaces. To add additional off parking it is proposed that the alley be shifted slightly to the east with 10 spaces developed adjacent to the gym. The remaining parking requirement would be met by using the 24 existing spaces adjacent to the school on Cedar and using the existing 12 spaces on the north side of First Street. The developer has entered into a letter of understanding with two users that would use both the gym and the kitchen. The gym would be rented to youth organizations and the kitchen would be used by a local non profit for meals preparation and food distribution.









Located on 2nd Street the convent originally was the home for the 20 + nuns who served the Guardian Angels parish and school. This building was constructed in 1916 and is in generally good condition. Currently, the first and second floors used by the parish as their parish offices. As with the other church owned buildings on the block, the heating, water and fire protection services are centrally located in the school building, thus crating a separate ownership opportunity is difficult. The vision for this building lease the first floor for office space and utilize the upper floor for storage. Potential users of the office space would be area non profits.

GYM/CONVENT

To accommodate the open space and off street parking requirements, the apartment concept has been removed from the plan and replaced with 3 single family homes. This portion of the property is currently the school playground and a portion of the parking area. The original concept required the removal of the existing home on Pine Street. Under the revised plan that home would remain.

The new two story single family homes would be designed to be architecturally compatible with the traditional homes in the neighborhood incorporating front porches with a rear garage accessing off of the alley. Lot widths would be 40ft by 120ft with 5ft side yard and 15 ft front yard setbacks which are generally consistent with existing homes in the neighborhood.



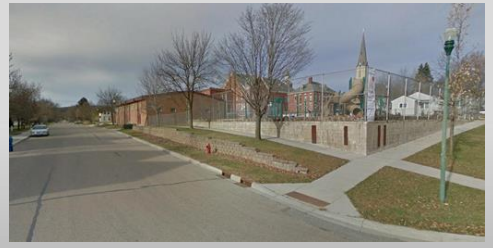











PINE STREET HOMES

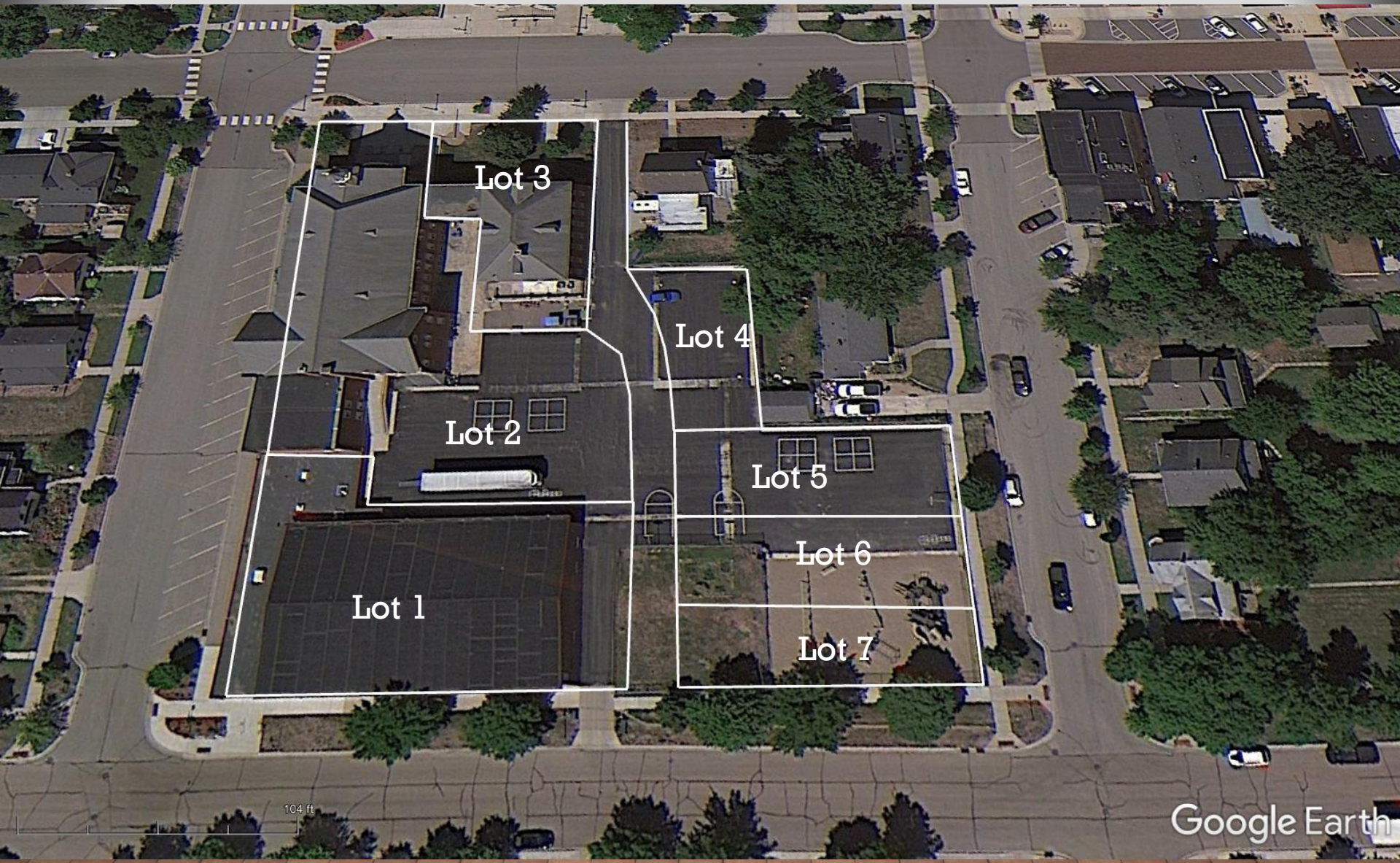
Lot 3
Lot 4
Lot 2
Lot 5
Lot 6
Lot 1
Lot 7
104 ft
Google Earth

COMMUNITY ASSET
DEVELOPMENT GROUP
1110 Yellow Brick Road
Chaska, Mn 55318
612-703-5709

5/29/22

Elizabeth Hanson, Planner
City of Chaska
One City Hall Plaza
Chaska, MN 55318

Dear Ms. Hanson,

In conjunction with our proposed concept plan for the Block 42 Redevelopment staff asked if we could provide addition information on the intended use of the gymnasium and, in particular, how it will impact parking demand. Historically, the Guardian Angles gym has been used for three main purposes:

- School activities
- Church gatherings
- Community activities particularly youth sports

Although we have not yet formally executed agreements regarding the ownership and use of the gym, our discussion with users has been focused on maintaining similar uses in the future. We have identified 3 priority users of the gym. These users would be:

- Guardian Angels Church
- Chaska Junior Olympic volleyball
- Chaska Youth basketball Association.

These users would receive priority in scheduling. Once the priority users are scheduled, gym space would be made available to other organizations on a first come, first serve basis. Other potential users would be youth baseball, youth softball, youth organizations outside of Chaska, Chaska Cubs, adult basketball or volleyball and private parties. We anticipate the gym would be rented on weekdays from 6:00pm to 10:00pm and from 8:00am to 10:00pm on weekends. Daytime use during the weekdays is anticipated to be limited and will be more focused on adult activities such as potentially basketball, pickleball or fitness classes. Another daytime use that is being explored is a pre school and after school program for grade school age students whose parents' work.

Separate from the gym is the commercial kitchen. One use will be using the commercial kitchen for meal and food preparation for programs such as meals on wheels, meal distribution and an on-site weekly free meal. Although the facility has a large commercial kitchen, certain upgrades will be required to bring it up to code. The upgraded kitchen will be of significant value to the Church as they wish to continue the

historic uses such as Friday fish fries, pancake breakfasts and Beef and Sausage Dinners.

Prior to submitting plans for preliminary site and building approvals, definitive agreements on the gym ownership and uses will be in place and shared with the City.

The building is roughly 9,200 square feet in size. Based on a “general assembly use”, City staff has calculated the gym would require 43 parking stalls. Use of the gym for the youth organizations will be the primary driver of parking demand. For youth volleyball the facility can accommodate two volleyball courts and assuming 12 players and coaches per team, 48 persons will be participating when volleyball is utilizing the courts. For basketball the facility can accommodate two small courts resulting in a similar number of participants.

If you need additional information, please contact me at your convenience.

Sincerely,

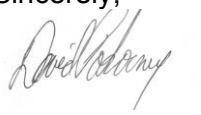

David Pokorney
Community Asset Development Group
davepokorney@gmail.com

REQUEST FOR ACTION
CHASKA PLANNING COMMISSION
06/08/2022

Subject: **Clover Ridge Apartments – Final Site & Building Plan, Final Plat and Variance**

Applicant: AV Development, LLC

Location: South of Pioneer Trail, West of Clover Ridge Drive, North of Twin Cities & Western Railroad

Case No.: 2022-35

Synopsis: Applicant seeks to obtain approval of a 119-unit apartment development on approximately 6 acres of land just north of Clover Ridge, and approval of a Variance request from zoning section 15.16.020.F.1 regarding PRD building setbacks

Prepared By: Elizabeth Hanson

Staff Recommendation: Motion to recommend approval

BACKGROUND

Back in 2000 when the Clover Ridge development was being planned, the property just north of the Twin Cities & Western railroad was also conceptually looked at for use as multi-family and apartments. The site being reviewed this evening was guided for Apartments. See below.

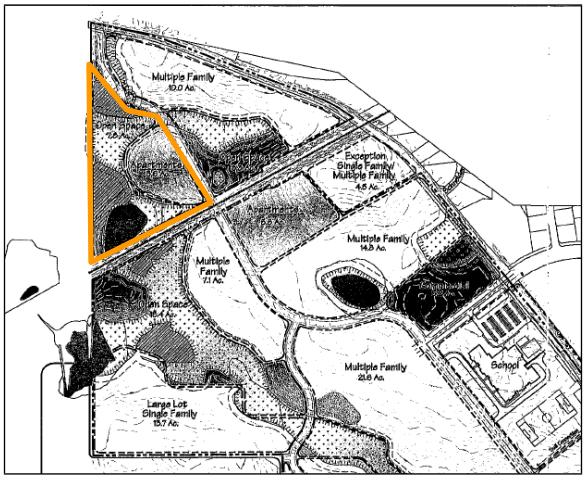

In December 2021, the Concept Plan for Clover Ridge Apartments was approved. In April 2022, the Preliminary Site & Building Plan, Preliminary Plat and Rezoning were approved.

CHANGES SINCE PRELIMINARY APPROVAL

The following are changes that have been done since preliminary approvals:

- **Design**. The architect/developer have worked on providing elements within the building to allow it to fit into the context of Chaska more in order to meet a condition of approval from preliminary. The developer has done the following to meet this condition:
    - Smaller scale through use of materials, rooflines, and groupings to create "townhouse" elements
    - Materials and elements applied to all sides for one building
    - Awnings create horizontal element to break up scale
    - Use of materials, such as Chaska brick and cedar, to tie into city and nature of immediate context

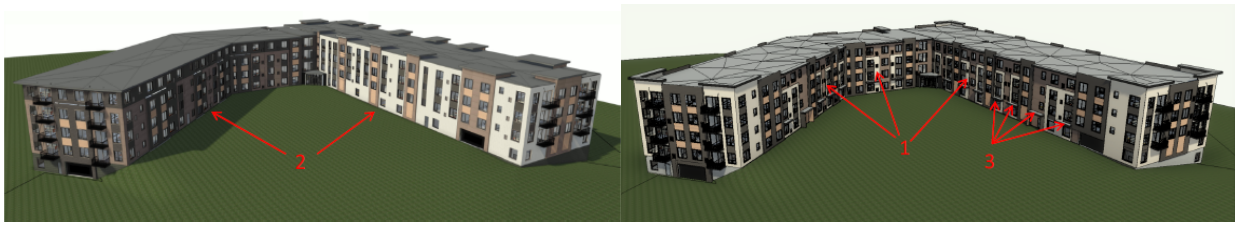

(Left: April 2022 Preliminary Plan; Right: Final Plan)

Project Goals
The identified goals in creating this new neighborhood include the following:

- Provide Chaska with an upscale residential apartment complex close to nearby retail amenities
- Views of the natural amenities
- Provide a welcoming place to live
- Promote an active and healthy lifestyle

Comprehensive Plan & Land Use
The Comprehensive Plan guides this area to be High Density Residential and Open Space. The proposal tonight is consistent with this guidance.

The parcel of land that this development encompasses is currently zoned Planned Residential Development (PRD-84).

Adherence With Section 15.16.020.F Planned Residential Development District Development Standards

- **Building Setbacks.** *Building setbacks from all property lines which form the perimeter of the total property in the PRD or from all exterior dedicated street right-of-way lines shall be at least 30 feet or the height of the building, whichever is greater. Minimum spacing between principal buildings shall be 25 feet.*
    - **Proposed: Building height is 42 feet; the nearest setback to the property line which forms the perimeter of the total property is 20 feet on the east side of the property. *The applicant is requesting a variance from this section of the code.***
- **Lot Coverage.** *The total ground area occupied by buildings in a PRD shall not exceed 20 percent of the total site area in the project. If the total project is to be staged over a period of time, open space shall be provided so that the ground coverage of any one stage shall not exceed 30 percent of the applicable site.*

    - **Proposed: 6% (35,000 square foot building divided by 552,066 square foot total site area)**
- **Floor Area Ratio (FAR).** *There shall be a maximum floor area ratio of 0.5. Floor area ratio shall be determined by dividing the sum total of the building floor area by the gross area of the total site.*
    - **Proposed: 0.25 (140,000 square foot floor area divided by 552,066 square foot gross area of the total site)**
- **Common Open Space.** *400 square feet per multiple family unit, (walkup apartments, high rise apartments, etc.) (47,600 square feet required for 119 units)*
    - **Proposed: ~400,000 square feet (includes plazas, trails, and wetland)**

Adjacent properties
The site is bound on the south by the Twin Cities & Western railway and the Clover Ridge development; to the east by Clover Ridge Drive and Pioneer Vista; the north by Pioneer Trail; and the west by property owned by the Kelzer family.

Existing Conditions
The site is 12 gross acres in size, approximately 6 of which are to be developable, and is currently vacant open space. There is a wetland complex that surrounds the 6 acre site on its north, west, and south edges. There are a couple stormwater ponds that sprinkle the property on the north side that were put in with the development of Clover Ridge Drive. The topography includes a high point off of Clover Ridge Drive, which is an ideal spot for development, then it gradually slopes down towards the surrounding wetlands. The site offers beautiful and unobstructed views of the wetlands and woodlands beyond. These natural features will create a natural buffer for the project from surrounding land uses.

CURRENT PROPOSAL
The request is for final site & building plan, final plat and a variance from zoning section 15.16.020.F.1. The proposed Clover Ridge Apartment project would consist of approximately 119 market-rate units on 3.2 acres of land (38 units/acre net density).

The existing wetland complex is intended to remain undisturbed. The existing stormwater ponds will also remain and may be expanded to incorporate this new development. An amenity and gathering area is proposed on the west edge of the site near the wetland area.

Layout
The apartment site will be directly accessed off the west side of Clover Ridge Drive. The building is angled and will surround the surface parking lot that faces out towards Clover Ridge Drive. The underground parking can be accessed from two different levels and by two separate points on the building; one on the northeast side, and the other on the south side. The northeast access will be at grade and provide 21 sheltered parking stalls. The south access will be below grade and provide 92 underground parking stalls.

Building Design & Height
The building is angled with the front façade facing Clover Ridge Drive. The building will contain approximately 119 units (195 total bedrooms) in four stories (42 feet high). These units will be a mixture of studio, one-bedroom, two-bedroom, and three-bedroom units. There will be one

level of underground parking. Some of the site and project amenities will include a community room with full kitchen, large screen TV and high-quality sound system, fully equipped fitness room, media room, pet washing station and play area.

According to the applicant the target resident for the project will be empty nesters, families, as well as millennials; those that are renting by choice because of their lifestyle and having access to more amenities from an apartment complex.

The building is proposed to be constructed out of glass, modular brick, architectural precast concrete, and fiber cement siding. The City of Chaska has certain building design and material requirements for multi-family residential buildings. A portion of it is stated as follows:

"Multi-family buildings shall use at least three (3) Class I materials and shall be composed of at least eighty (80) percent Class I materials, and no more than five (5) percent Class III materials

Building Materials	
Class I	Glass, face brick modular, fiber cement siding (88%)
Class II	Architectural Precast Concrete (12%)
Class III	Not provided
CLASS I REQUIRED	80%; three different materials
CLASS III REQUIRED	Shall not exceed 5%
CLASS I PROVIDED	88%; three different materials
CLASS III PROVIDED	None

The applicant is showing that their building meets the requirements. The applicant has provided a conceptual renderings of the building. The building's exterior appearance appears to show a well-balanced application of colors and depth. The building will have 360 degree viewsheds and thus the balance of materials and articulation are important. The applicant has provided revisions within their design to show how it can fit into Chaska. That analysis from the applicant is as follows:

1. We are creating more material/color variation around all sides of the building, achieved through additional bump outs, roofline variation with parapets, eaves, and cornices, material variation between brick, split face block, panel siding, and lap siding. We are also proposing some 3-story brick elements (the beige/Chaska brick areas) that group windows together and have an awning element to try to nod to a townhome/rowhome scale since that seemed desirable to several community members. Attached is a snip of a typical area I'm referring to.

2. These materials and elements have been applied throughout the exterior on all sides to create one cohesive building instead of two contrasting buildings.
3. The awnings mentioned in #1 on the courtyard side create a horizontal element that breaks up the tall walls and lends human scale on the courtyard side of the building where pedestrians would interact up close with the building.
4. We are proposing a tan/beige brick very similar to the Chaska type brick found in many buildings in historic Chaska, see elevation page showing our proposed materials. Additionally, we feel that the added detail around the walls and roof tie into the surrounding area better, including the existing 4 story buildings in Clover Ridge. Additionally, the warm/earthy colors with wood-look accent material palette was developed to nod to the unique natural setting, so while that isn't tying into other buildings necessarily, we feel it does tie into the natural setting of the wetlands that will be preserved.

The height of the building will be approximately 42 feet tall and four stories. Generally speaking, four stories fits with other apartment buildings built in Clover Ridge (i.e. Cloverfield Marketplace and Clover Ridge Condominiums).

Setbacks
Namely, the front yard setback should be no less than 20 feet. The rear yard setback should be 20 feet. The side yard setback should be 10 feet. Corner lots should have a side yard setback of 20 feet. In addition to these setbacks, there are other setbacks that may apply to this site. See below:

SETBACKS	
Direction	**Setback**
Railway	50 feet

PARKING SETBACKS	
Direction	**Setback**
ROW	10 feet
Interior Property Lines	5 feet

Parking/Access/Circulation/Traffic
195 parking spaces are proposed as a part of this project; 120 underground stalls and 75 above ground stalls. The following chart summarizes the overall parking demand on the site, based on the approximated sizes of the conceptual uses.

Uses	Approx. Size	Code Req.	Est. Parking Req.
Multi-Family Res.	119 dwelling units	2ps/dwelling unit	238 parking spaces
		REQUIRED	**238 parking spaces**
		PROVIDED	**195 parking spaces**

According to this table the applicant is not meeting the required amount of parking spaces needed for the proposed use of the site. The site is providing 195 stalls (43 stall deficiency) and meets a 1.65 parking stall per dwelling unit ratio (0.35 ratio deficiency). The developer completed a parking analysis which concluded that their size of building would require 148 stalls based on comparable suburban apartment complexes. The building is proposing to provide 195 total bedrooms, which the parking will provide a 1:1 ratio for.

For relatable comparison, the Lake Jonathan Flats project is very comparable in size and parking. Lake Jonathan Flats was approved for 117 dwelling units (156 total bedrooms) and a reduced amount of parking. Their site showed 199 stalls on site, which was equivalent to 1.7 parking stalls per dwelling unit. The Lake Jonathan Flats building has since been constructed and operating. Staff has not noticed nor has been notified of any parking issues here.

During the analysis of the Lake Jonathan Flats building it was also determined that a 1 parking stall per bedroom ratio was a sufficient way to provide parking for an apartment. A summary provided showed examples of other apartment complexes in the Twin Cities area. It identified the dwelling unit and bedroom counts and parking accommodations for each apartment complex to give one a realistic understanding of the parking needs for this type of apartment product. Upon comparison, the Lake Jonathan Flats proposal met or exceeded the parking totals necessary for this type of product as it relates to parking stalls per dwelling unit and parking stalls per bedroom unit.

Staff also wanted to understand this 1:1 parking space to bedroom unit ratio first-hand by relating it to an existing project in the City. Staff looked at the Chaska Place Apartments (fka. North Meadows Apartments) located just west of the Fire Station on Engler Boulevard. The program make-up in this complex equals 127 units with a total of 259 bedrooms. By ordinance, this complex was required to provide 254 parking stalls, however, the total amount of parking provided was 259 stalls. If the amount of bedroom units dictated the amount of parking stalls required then this complex would be in compliance. By all accounts, this apartment complex provides adequate parking for their residents based on the notions that street parking has not been observed or a parking deficiency has not been brought up. With that in mind, staff finds that the parking space to bedroom ratio is an appropriate way of determining adequate parking.

The Lake Jonathan Flats building incorporates 22% studios, 45% one-bedroom, and 33% two-bedroom units (156 total bedrooms). The Clover Ridge Apartment building incorporates 8% studios, 42% one-bedroom, and 37% two-bedroom, and 13% 3-bedroom units (195 total bedrooms).

Overall, the parking information provided by the applicant, field observations of existing examples (including a very comparable example of Lake Jonathan Flats), and parking based on bedroom counts all suggest that the parking proposed will accommodate the Clover Ridge Apartments project.

The access into the site will be from one ingress/egress point on Clover Ridge Drive. The underground parking lot and surface parking lot will be accessed from this ingress/egress point.

A traffic study was completed for this project. The study concluded that the project the will have appropriate access to the sites and to the surrounding roadway network. The traffic operational analysis indicates there is available capacity on the roadways surrounding the site to accommodate site-generated traffic.

Construction access will enter and exit from Pioneer Trail to the north. Construction traffic will be precluded from going south on Clover Ridge Drive per the developer's construction access plan.

Pedestrian Connections
Pedestrian systems currently exist on both sides of Clover Ridge Drive. A sidewalk on the east side and a public trail on the west side that stubs up to Pioneer Trail. Internal sidewalks from the site will provide access to the public trail. Another multi-use trail stubs north of the apartment building that provides access to the existing stormwater pond. The site plan shows this stormwater access to be relocated on the north side of the pond.

Landscaping
The table below indicates the landscaping requirements for this site:

LANDSCAPING REQUIREMENTS & PROPOSED		
	Required	**Proposed**
Overstory Trees	442 caliper inches	447 caliper inches
Understory Trees	36	36
Shrubs	471	471

Usable Open Space
Multi-Family residential building sites are required to provide sufficient, usable open space, which is defined as defined as "a portion of a lot which provides the purpose for outdoor recreation, scenic amenity, and/or shared exterior space for people to gather and use". A minimum of 15% of the gross site area shall be shared open area. The applicant is showing that 28% of their site will be usable open space.

The site is showing three different areas for usable open space. One area is shown on the west side of the building for an outdoor patio, which can be accessed via the building. This patio space will be elevated over the underground parking area and contain seating and eating areas. The other patio near the southeast portion of the building will contain grilling area and picnic tables. The other area for usable open space is situated on the south portion of the site. It will contain benches, a natural path that will meander through the landscaping, and provide pleasant views of the adjacent wetland area.

Lighting
Any lighting proposed for this plan should be fully screened and face downward. The specs proposed will meet this. Parking lot poles will be 22 feet high.

Utilities
Water and sewer are available to serve this site.

Stormwater
The applicant will work with the City to determine the drainage necessities for the site. They will need to meet City and County standards.

Development Costs (Infrastructure Improvements)
The City of Chaska has a number of area-wide development cost such as, but not limited to:

- Storm Sewer
- Trails
- Parks

Prior to final platting, the developer will need to work with City Staff to determine which of these are applicable and what those fees will be.

Final Plat
The site will be platted into one lot for the apartment site. The following are the proposed outlots and their dispositions:

- Outlot A: wetland and stormwater ponding to be owned by the City of Chaska

Variance from Zoning Section 15.16.020.F.1
The applicant is requesting a variance from zoning section 15.16.020.F.1. which speaks to building setbacks in PRD zoning districts. The code states as follows: *Building setbacks from all property lines which form the perimeter of the total property in the PRD or from all exterior dedicated street right-of-way lines shall be at least 30 feet or the height of the building, whichever is greater. Minimum spacing between principal buildings shall be 25 feet.* Based on this code the site would have to meet a 42 foot setback from all site property lines. The site plan is showing a 20 foot setback from the eastern property line, which is the only area that does not meet this requirement.

A variance may be granted if there are conditions on a property that create a hardship that are not present on similar sized lots, and if relationships with abutting property will not be adversely affected by the Variance.

The site has unique physical characteristics that are not similar to others. The wetlands that surround the site are of higher quality, which create larger buffer requirements compared to most wetlands within the City. Wetlands are assessed and classified based on the characteristics they have related to plant diversity, connectivity to habitats, and locations within the watershed. A wetland will get a higher classification if the characteristics are more significant. This site, for example, contains two different classified wetlands; one that is classified as a "Manage 3 Wetland" and one that is classified as a "Unique Wetland". These are the top 2 classifications (out of 4 total) for wetlands with "Unique" being at the top. Both these wetlands flank the west edge of the site. Unique wetlands are only found in 10 other locations within the City. These other Unique Wetlands are only within undevelopable areas primarily.

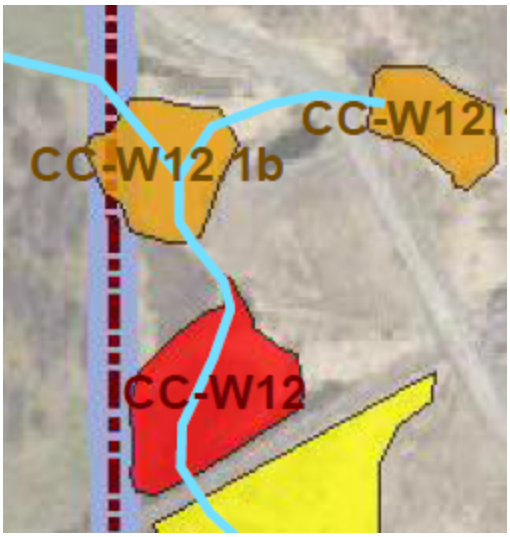

Excerpt from City of Chaska's Surface Water Management Plan
(Manage 3 Wetland = Orange; Unique Wetland = Red)

Because of the fact that these are top tier wetlands there are significant buffer requirements on the west edge of the site (50 feet on the northwest side and 75 feet on the southwest side). The building and parking are oriented more to the north and east of the site to avoid encroachment into these buffers.

Precedence & Staff Analysis
The request to provide a 20 foot setback on the east edge is not atypical to other building setbacks in the area. For example, Pioneer Vista, which is the multi-family development across the street (Clover Ridge Drive) from this project, also has a 20 foot setback requirement from the property line that abuts Clover Ridge Drive. Other residential facilities in Clover Ridge provide a variety of setbacks from Clover Ridge Drive including zero lot lines for two apartment buildings off of Hundertmark Drive and Clover Ridge Drive. The request to deviate from the 42 foot setback would not set a bad precedent from staff's perspective.

In addition, the applicant's site plan is avoiding the wetlands and their buffer requirements entirely. The priority was to push the building and parking away versus encroaching into the buffer areas with the idea to preserve the quality of the wetlands. If the wetland buffers did not exist the site would be able to meet the 42 foot setback. The applicant has also oriented the building in a way so that it's shortest edge of the building would be encroaching into that building setback. In other words, the building layout towards the street side is minimal.

The preliminary site & building plan was approved in April 2022, which showed the 20 foot setback on the east edge. A discussion also took place at this meeting that indicated a variance would be needed. At this point, the Variance request is a formality based on the previous approvals that have occurred for this project. The variance request to provide a 20 foot setback on the east property line does not pose a concern from staff's perspective as precedence has already been set on neighboring properties and the unique characteristics of the property create a natural hardship that the site plan is adhering to.

Schedule
The developer's goal is to start construction of the project at the end of April/beginning of May

2022. The construction of the project takes approximately 18-20 months, with the anticipation to be completed by Spring of 2024.

Deadline for Agency Action

The City of Chaska received the complete application for this request on May 25, 2022. Pursuant to Minnesota State Statutes the City must act on this request by **Sunday, July 24, 2022 (60 days)**, unless the City provides the petitioner with written reasons for an additional 60-day review period. The additional review period would extend to Thursday, July 22, 2022. The City may with the petitioner's consent extend the review period beyond the Thursday, July 22, 2022 date. Lastly, if the City denies the petitioners request "… it must state in writing the reasons for the denial at the time it denies the request."

PLANNING COMMISSION ACTION REQUESTED:

Motion to recommend to City Council approval of the Clover Ridge Apartment Final Site & Building Plan and Final Plat for 119 units, subject to the following conditions:

1. **Approvals shall be based on the following graphic exhibits:**
    a. **Project Narrative (pgs 1-4), prepared by AV Development, LLC, dated May 25, 2022**
    b. **Final Plat (pgs 1-2), prepared by Sambatek, undated**
    c. **Existing Conditions Survey, prepared by Sambatek, dated January 5, 2021**
    d. **Construction Access Plan, undated**
    e. **Photometric Site Plan, prepared by Mlazgar Associates, dated March 7, 2022**
    f. **Title Sheet (pg C1.01), prepared by Sambatek, dated May 3, 2022**
    g. **Demolition Plan (pg C2.01), prepared by Sambatek, dated May 3, 2022**
    h. **Site Plan (pg C3.01), prepared by Sambatek, dated March 31, 2022**
    i. **Grading Plan (pg C4.01), prepared by Sambatek, dated May 3, 2022**
    j. **Grading Notes (pg C4.02), prepared by Sambatek, dated May 3, 2022**
    k. **Phase 1 Erosion Control (pg C5.01), prepared by Sambatek, dated May 3, 2022**
    l. **Phase 2 Erosion Control (pg C5.02), prepared by Sambatek, dated May 3, 2022**
    m. **Erosion Notes (pg C5.03), prepared by Sambatek, dated May 3, 2022**
    n. **SWPP (pgs C5.04-C5.05), prepared by Sambatek, dated May 3, 2022**
    o. **Utility Plan (pg C6.01), prepared by Sambatek dated May 3, 2022**
    p. **Details (pgs C9.01-C9.03), prepared by Sambatek, dated May 3, 2022**
    q. **Landscape Plan (pg L1.01), prepared by Sambatek, dated May 3, 2022**
    r. **Landscape Details and Notes (pg L1.02), prepared by Sambatek, dated May 3, 2022**
    s. **Fire Truck Turning Exhibit, prepared by Sambatek, dated March 7, 2022**
    t. **Open Space Exhibit, prepared by Sambatek, dated March 31, 2022**
    u. **Clover Ridge Apartments (pgs A101-A105), prepared by J Corp, dated January 28, 2022**
    v. **Clover Ridge Apartments (pgs A201-A202), prepared by J Corp, dated March 7, 2022**
    w. **Clover Ridge Apartments (pg A203), prepared by J Corp, dated March 31, 2022**
2. **Adherence to the following setbacks for Clover Field Apartments:**
    a. **Front: 20 feet**
    b. **Rear: 20 feet**
    c. **Side: 10 feet**
    d. **Side (corner): 20 feet**
3. **Provision of 360 degree architecture be used on all facades.**
4. **Prior to final plat approval, developer shall enter into an agreement with the City for the provision of necessary infrastructure and associated development costs.**
5. **Provision of a storm water management plan meeting City and Carver County WMO standards.**
6. **Provision of a construction traffic plan to be coordinated and approved by the**

City Engineer.

7. **Provision that if masonry is used that they are natural stone and/or full face modular brick in order to be considered Class I materials.**
8. **Provision that mechanical equipment will be completely screened from view.**
9. **Provision that section 15.28 Special Regulations are complied with.**
10. **Provision that light poles do not exceed 25 feet in height and comply with zoning section 15.28.250.**

Motion to recommend approval of the Variance from Section 15.16.020.F.1.

AV Development, LLC
11800 Singletree Lane Suite 301
Eden Prairie, MN 55344

May 25, 2022

Elizabeth Hanson
City Planner
City of Chaska
One City Hall Plaza
Chaska, MN 55318

Re: Request for Final Plat, Final Building/Site Plan Review Approval
Clover Ridge Chaska Apartments

Dear Ms. Hanson,

AV Development, LLC is requesting final plat and final building & site plan approval from the City of Chaska for a new ground up luxury apartment complex on 12.0 acre parcel of land located on Clover Ridge Drive (Outlot B Pioneer Vista, PID #305000560). We are submitting an Application Fee and Processing Fee per the requirements.

Goal of the Project:

The apartment project will provide Chaska with an upscale residential apartment complex closer to everyday conveniences and within a beautiful setting that integrates itself with trails and woodlands. The property's natural attributes and nearby retail amenities make an apartment residential complex the highest and best use of the land / property. As visioned, the apartment project would be a welcoming place to live, promoting an active and healthy lifestyle, which will allow Chaska to continue and realize its vision as "The Best Small Town in Minnesota".

The Property:

The proposed apartment project will occupy approximately 6.0 acres of the total 12.0-acre parcel. Refer to the project documents for further depiction of the site and location.

Existing Conditions:

The site is an undeveloped parcel with the railroad creating the southern boundary and Clover Ridge Drive curving to create the eastern and northern boundary to the site. There are already a couple of storm ponds from the development of the Clover Ridge Rd that could easily be expanded to accommodate storm water from our project. The topography includes high point off of Clover Ridge Drive, an ideal spot for development, and it slopes down to the surrounding wetlands. The site offers beautiful and unobstructed views west of the surrounding wetlands and mature woodlands beyond. These natural features will create a natural buffer for the project from surrounding land uses as half of the site is proposed to remain in its natural state.

Additionally, every effort will be made to preserve natural features adjacent to the building area, including existing trees to the extent feasible.

In order to facilitate development, we anticipate the site will need to export soil to allow for the subsurface parking and allow for natural grades to hit the building at a slope that feels as if the building is emerging from the land.

Description of Apartment Project:

The apartment project will contain 119 market rate units in a four-story structure with a variety of modern floor plan designs including a mixture of bedroom units (studios, one, two, and three). There will be one level of underground parking and additional surface parking which will provide a parking still for each unit. Green space will be maximized with preservation of the wetland, and the inclusion of outdoor patios, grills, and community room that enhance community interaction amongst the residents. Since the proposed complex is not large in scale, the residential units will be easily absorbed with current rental property demand in the community.

The apartment project will be a luxury, market-rate residential complex offering its resident a wide array of amenities within the units themselves as well as within the overall complex. Some of the site and project amenities will include: community room with full kitchen, large screen TV and high-quality sound system, fully equipped fitness room, media room with USB ports, pet washing station and play area. Residential units will include: walk-in closets, high speed internet, in-unit washers and dryers, private balcony or patio, full stainless-steel kitchen appliances.

The target resident for the project will be empty nesters, families, as well as Millennials, those that are renting by choice because of their lifestyle and are seeking more amenities from an apartment complex.

The building and project will fit in with surrounding neighborhoods by utilizing similar and complimentary exterior materials consisting of modular brick and fiber cement lap and panel siding, a complimentary color scheme of warm earth tones, and building massing consisting of parapet walls and low-slope roofs that tie into the multi-family projects in the vicinity as well as smaller portions with varying materials applied to break down the scale of the building.

The project will comply with City of Chaska site lighting requirements. Exterior lighting will not be directed upon adjacent land or the public right-of-way.

Parking:

The project requires a parking ratio of 2 parking stalls per dwelling unit per City requirements. The developable area of the site is prohibitive to provide the amount of surface parking necessary to accomplish this ratio. The building provides for 120 interior parking stalls, while the site provides an additional 74. This totals 194 total stalls, or 1.63 stalls per dwelling unit.

The unit mix totals 194 bedrooms, so the parking count meets a 1:1 stall/bedroom ratio.

A parking study was completed to estimate the peak parking demands for the project and determine if sufficient parking capacity is provided. The results of the parking study indicate a demand of 148 total parking spaces.

Clearing of snow from the surface parking lot is a strategic problem. There is a dedicated location for snow removal in the southeast corner of the parking lot. Snow will be removed from a preferred vendor and will be based on a rotation determined with the vendor and is dependent on snow accumulation levels throughout the day and/or evening.

Architectural Details:

Here is a brief summary of architectural details / features:
1) The exterior finish comprises of a combination of modular brick and fiber cement siding.
2) Exterior windows and doors at residential units are fiberglass or vinyl with U values compliant with Minnesota Energy Conservation Code 2020.
3) Exterior doors at common areas are an aluminum storefront system while the windows are fiberglass or vinyl, with U values compliant with Minnesota Energy Conservation Code 2020.
4) No rooftop mechanical units are proposed
5) All exterior colors / finishes would follow a cohesive and complementary design strategy, delivering an upscale aesthetic to the neighborhood.
6) Interior colors and finishes would also follow a cohesive and complementary design strategy, creating an environment that enhances livability.

In addition, during the Preliminary Site & Building Plan public hearings, there was concern with the northeast façade facing the public trail. There was expressed desire to provide an enhanced buffer in this area. To address this concern, new plantings were selected that will provide year-round buffering from the trail to the building. These plantings were also selected for their height and ability to reach upwards of 30' to more adequately screen the building from the trail.

Access and Connectivity:

Access to the site will be obtained via Clover Ridge Drive. The site can be roughly by reached to Minneapolis-St. Paul International Airport and the Mall of America within a 30-minute drive. The 30-minute drive time also reaches as far as Delano to the north, New Prague to the south, and nearly to Glencoe to the west.

The site is surrounded by a mix of residential, institutional, industrial, and commercial uses and are situated near employment concentrations and retail activity, as well as near the Chaska school system (specifically in the Eastern Carver County School District).

The site will connect pedestrians to adjacent neighborhoods in Chaska via the trail on the west side of Clover Ridge Drive.

Compliance:

The site was approved to be rezoned to Planned Residential District (PRD) at the April 18, 2022 City Council meeting.
The site received conditional approval for Preliminary Site & Building Plan and Preliminary Plat at the April 18, 2022 City Council meeting. There were 12 conditions of approval that needed to be addressed at Final Site & Building Plan application. These conditions were addressed and responses to these conditions are provided with the included memo dated May 3, 2022.

Building Setback Variance Request:

Building setbacks within the PRD are required to be a minimum of 30 feet or the height of the building, whichever is greater. For this project, the height of the building is greater than 30 feet, therefore, the height of the building at 42 feet would be the setback requirement. Due to physical constraints on the property, it is not possible to achieve these setback requirements. The project is constrained on all sides by right of way (east), wetlands (west and south), and a City stormwater facility (north).

The wetlands have specific buffer requirements and additional building setback requirements that limit the developable area for the project. In order to comply with the wetland buffer and setback requirements, the project will need to deviate from the PRD standards for building setbacks on the north and east property lines. The requested variance is as follows:

Building Setback Variance		
	Required	Requested
Front	42’	20’
Rear	42’	20’
Side	42’	10’
Side (corner)	42’	20’

Drainage:

The site is sloped to drain to the Southwest corner which is the sites low point. There is active ponding that takes place within the delineated wetland. There are existing retention ponds on the property constructed with the construction of Clover Ridge Rd.

Proposed stormwater management will comply with City of Chaska and Carver County Watershed Management Organization rules and requirements.

Developer Experience:

Ashish Aggarwal is a full-time real estate owner / operator for the last 20 years, portfolio includes over 1.5 million of square feet under ownership and management in MN and AZ. This includes residential, senior living, office, industrial, and retail. Stonebay of Orono senior living project is the last development completed.

Vishal Dutt has been in real estate for the last 20 years with various real estate owners / operators in various asset types (retail, industrial, office, multi-family housing, senior living housing). Specialization includes ensuring financial and operational diligence for all aspects of real estate.

We look forward to working with the City of Chaska on this application and project. Our goal is to enhance the community and surrounding area, want to do what’s best for the area.

Thank you,

AV Development, LLC

BUILDING EXTERIOR COMPARISON

Main Exterior Concerns

1. Visually reduce the scale of the building
2. Create more variety around all sides rather than a “2 building” look
3. Create human scale where possible
4. Fit the building into the Chaska and immediate context

Main Exterior Proposals

1. Smaller scale through use of materials, rooflines, and groupings to create “townhouse” elements
2. Materials and elements applied to all sides for one building
3. Awnings create horizontal element to break up scale
4. Use of materials, such as Chaska brick and cedar, to tie into city and nature of immediate context





BUILDING EXTERIOR COMPARISON





<u>Clover Field Marketplace</u>

Similarities

- Multistory Residential Building
- 3 Story Elements to Break up Building Mass
- Uses Parapets and Eaves
- Bump outs and Reliefs

BUILDING AESTHETIC

Downtown Chaska

- Chaska Brick Color used throughout Downtown Chaska
- Public side of apartments to correlate to historic Chaska

Chaska Event Center

- Material Palette
  - Brick, Glass, Wood
- Main Glass Entry
- Multiple Flat Roof Heights
  - Dark Fascia and Roof Color







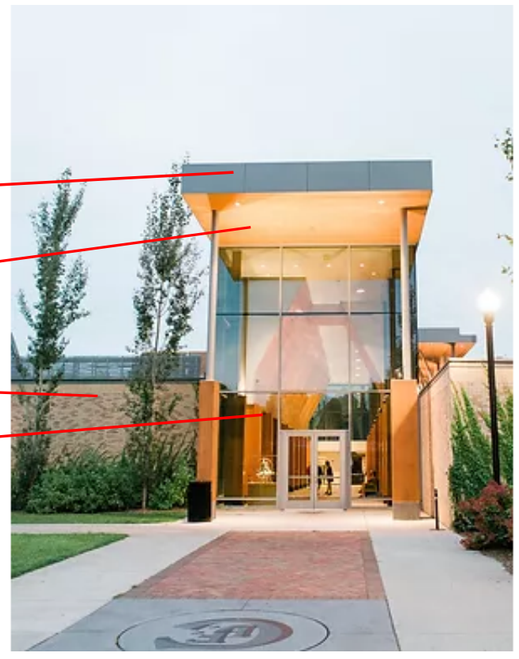



CLOVER RIDGE APARTMENTS

PLAT FILE NO.
C.R. DOC. NO.

KNOW ALL PERSONS BY THESE PRESENTS: That Chaska Investment Limited Partnership, a Minnesota limited partnership, owner of the following described property:

Outlot B, PIONEER VISTA, Carver County, Minnesota
(Abstract property)

Has caused the same to be surveyed and platted as CLOVER RIDGE APARTMENTS and does hereby donate and dedicate to the public for the public use forever the drainage and utility easements as shown on the plat.

In witness whereof said Chaska Investment Limited Partnership, a Minnesota limited partnership has caused these presents to be signed by its proper officer this _____ day of _____, 20____.

Chaska Investment Limited Partnership, a Minnesota limited partnership

SIGNED: _____

By: _____, as _____

STATE OF MINNESOTA
COUNTY OF _____

This instrument was acknowledged before me this _____ day of _____, 20____, by _____ as _____ of Chaska Investment Limited Partnership, a Minnesota limited partnership, on behalf of the partnership.

_____ _____
Signature Notary Printed Name

Notary Public, _____ County, _____
My Commission Expires _____

SURVEYOR'S CERTIFICATE

I Mark R. Salo do hereby certify that this plat was prepared by me or under my direct supervision; that I am a duly Licensed Land Surveyor in the State of Minnesota; that this plat is a correct representation of the boundary survey; that all mathematical data and labels are correctly designated on this plat; that all monuments depicted on this plat have been, or will be correctly set within one year; that all water boundaries and wet lands, as defined in Minnesota Statutes, Section 505.01, Subd. 3, as of the date of this certificate are shown and labeled on this plat; and all public ways are shown and labeled on this plat.

Dated this _____day of _____, 20_____.

_____
Mark R. Salo, Licensed Land Surveyor,
Minnesota License No. 43933

STATE OF MINNESOTA
COUNTY OF _____

This instrument was acknowledged before me this _____ day of _____, 20_____, by Mark R. Salo.

_____ _____
Signature Notary Printed Name
Notary Public, _____ County, Minnesota
My Commission Expires _____

CITY COUNCIL, CITY OF CHASKA, MINNESOTA

This plat of CLOVER RIDGE APARTMENTS was approved and accepted by the City Council of the City of Chaska, Minnesota at a regular meeting thereof held this _____ day of _____, 20_____, and said plat is in compliance with the provisions of Minnesota Statutes, Section 505.03, Subd. 2.

City Council, City of Chaska, Minnesota

_____, Mayor

_____, City Manager

COUNTY SURVEYOR, CARVER COUNTY, MINNESOTA

Pursuant to Chapter 395, Minnesota Laws of 1971, this plat has been reviewed and approved this _____ day of _____, 20_____.

Brain E. Praske, County Surveyor

By: _____

COUNTY AUDITOR, CARVER COUNTY, MINNESOTA

I hereby certify that taxes payable in _____ and prior years have been paid for land described on this plat. Dated this _____day of _____, 20_____.

Crystal Campos, County Auditor

By: _____, Deputy

COUNTY RECORDER, CARVER COUNTY, MINNESOTA

I hereby certify that this plat of CLOVER RIDGE APARTMENTS was filed in the office of the County Recorder for public record on this _____ day of_____, 20____, at _____ o'clock ____ .M.

Kaaren Lewis, County Recorder

By: _____, Deputy

SAMBATEK, INC.
ENGINEERING, PLANNING AND LAND SURVEYING

SHEET 1 OF 2 SHEETS

CLOVER RIDGE APARTMENTS

C.R. DOC. NO. _____

DRAINAGE AND UTILITY EASEMENTS ARE SHOWN THUS:
(NOT TO SCALE)

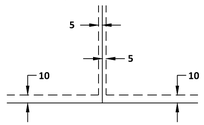

BEING 5 FEET IN WIDTH AND ADJOINING LOT LINES AND BEING 10 FEET IN WIDTH AND ADJOINING PUBLIC WAYS, UNLESS OTHERWISE INDICATED ON THIS PLAT.

- ◉ DENOTES A FOUND SECTION CORNER
- ○ DENOTES A 1/2 INCH BY 16 INCH SET IRON MONUMENT MARKED BY LICENSE NUMBER 43933
- ● DENOTES A 1/2 INCH FOUND IRON MONUMENT AS NOTED

THE EAST LINE OF OUTLOT B, PIONEER VISTA IS ASSUMED TO HAVE A BEARING OF NORTH 00 DEGREES 20 MINUTES 04 SECONDS WEST

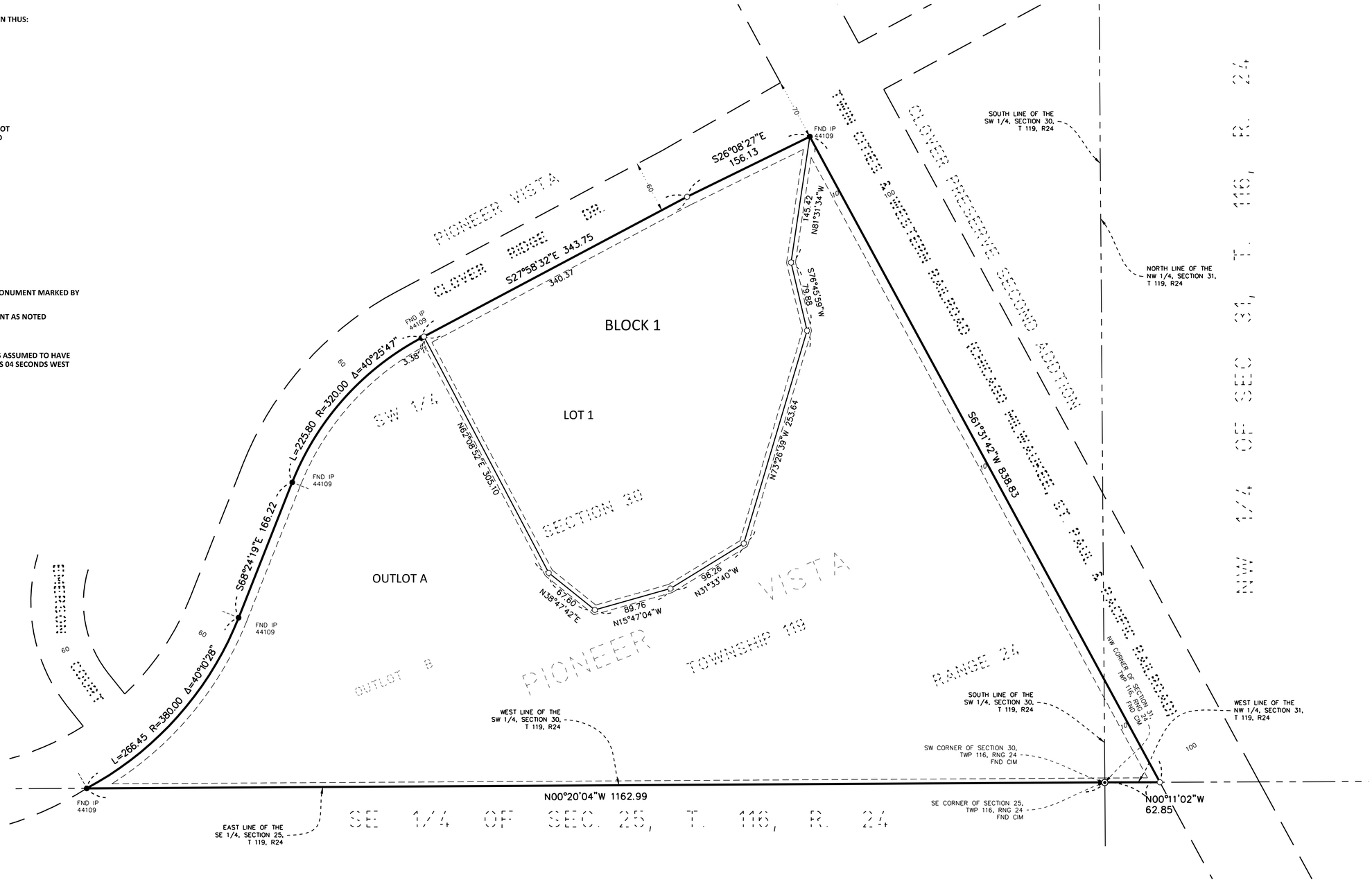

SAMBATEK, INC.
ENGINEERING, PLANNING AND LAND SURVEYING

SHEET 2 OF 2 SHEETS

EXISTING CONDITIONS SURVEY

A SURVEY OF LANDS LOCATED IN THE SW 1/4 OF SECTION 30 AND THE NW 1/4 OF SECTION 31
IN TWP. 119, RNG. 24, CITY OF CHASKA, CARVER COUNTY, MINNESOTA

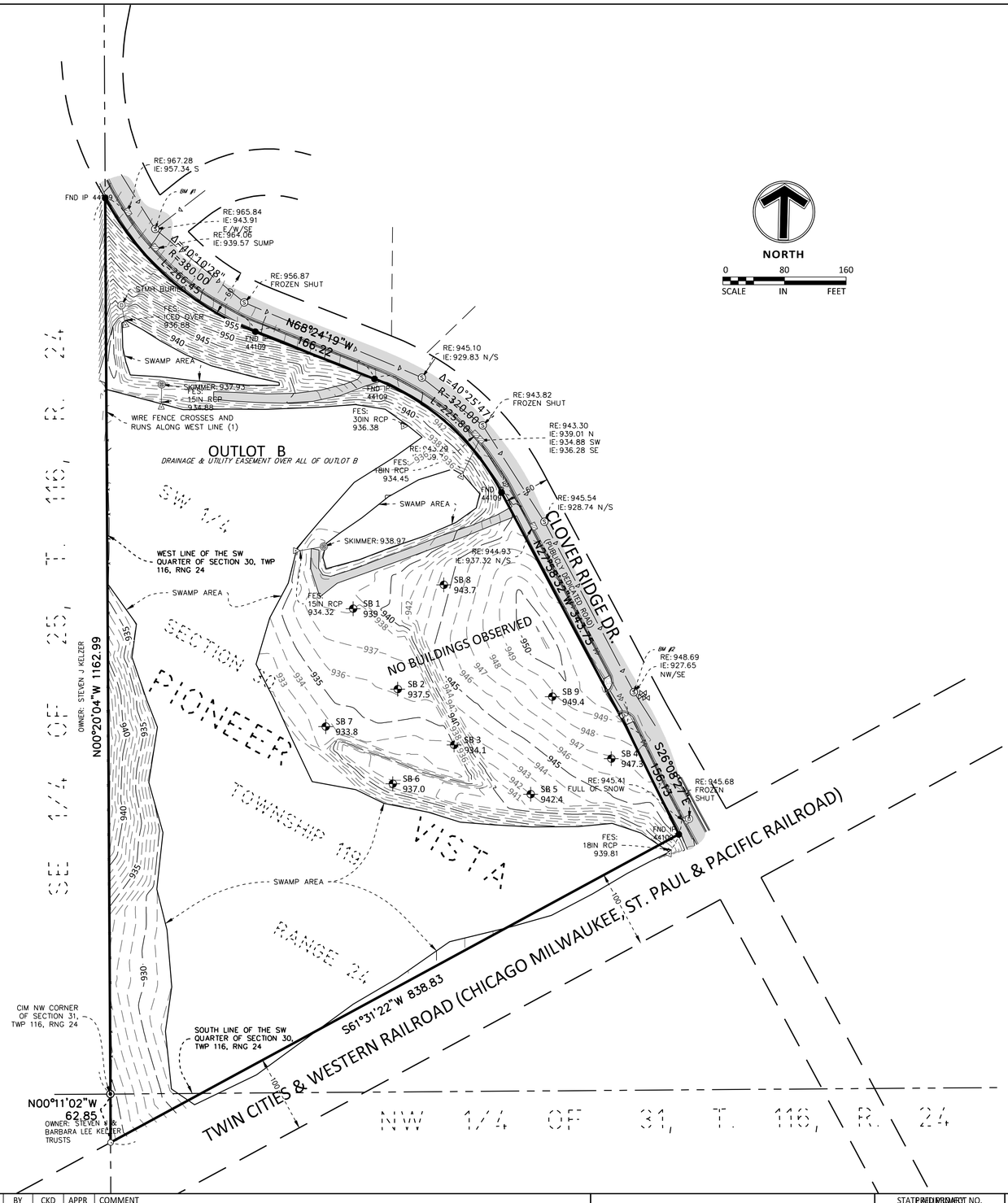

PROPERTY SUMMARY

1. SUBJECT PROPERTIES ADDRESS IS UNASSIGNED, ITS PROPERTY IDENTIFICATION NUMBER IS 30.5000.560.
2. THE GROSS AREA OF THE SUBJECT PROPERTY IS 11.9851 Acres or 522,071 SQUARE FEET.
3. THE SUBJECT PROPERTY IS ZONED OPEN DEVELOPMENT, PER CITY OF CHASKA ZONING MAP ON THE CITY OF CHASKA WEBSITE ACCESSED 01/05/2021.

SURVEY NOTES

1. THE BEARING SYSTEM IS BASED ON THE CARVER COUNTY COORDINATE SYSTEM, NAD85 (1986 ADJ.)
2. FIELD WORK WAS COMPLETED ON 01/02/2022
3. THIS SURVEY WAS PERFORMED UNDER THE COVER OF SIGNIFICANT SNOW. THE SURVEYOR MAKES NO GUARANTEE THAT ALL IMPROVEMENTS ARE SHOWN HEREON.

BENCHMARKS

1. THE VERTICAL DATUM IS BASED ON NAVD88. THE ORIGINATING BENCH MARK IS MNDOT TOWNGOLF, REFERENCED FROM THE MNDOT GEODETIC DATABASE.

BENCHMARK #1 SANITARY MANHOLE N. END OF SITE	ELEV.=965.84
BENCHMARK #2 SANITARY MANHOLE S. END OF SITE	ELEV.=948.69

LEGEND

FOUND MONUMENT	WATERMAIN
SET MONUMENT MARKED	SANITARY SEWER
ELECTRIC METER	STORM SEWER
LIGHT	FLARED END SECTION
AIR CONDITIONER	TELEPHONE PEDESTAL
GUY ANCHOR	ELECTRIC TRANSFORMER
HANDICAP STALL	GAS METER
UTILITY POLE	OVERHEAD WIRE
POST	CHAIN LINK FENCE
SIGN	IRON FENCE
	WIRE FENCE
	WOOD FENCE
	EASEMENT LINE
	SETBACK LINE
	RESTRICTED ACCESS
	CONCRETE CURB
	BUILDING LINE
	BUILDING CANOPY
	STANDARD DUTY ASPHALT PAVING
	BITUMINOUS SURFACE
	CONCRETE SURFACE
	LANDSCAPE SURFACE

NO	DATE	BY	CKD	APPR	COMMENT

Print Name: _____

Date _____ License # _____

STATE PROJECT NO.
PRELIMINARY
STATE PROJECT NO.
FINAL
COUNTY PROJECT NO.
CONSTRUCTION DOCUMENTS

DRAWN BY
DJT
DESIGNED BY
CHECKED BY
JCW
PROJECT NO.
50521

Sambatek
www.sambatek.com
Engineering | Surveying | Planning | Environmental

EXISTING CONDITONS

AV DEVELOPMENT, LLC
CHASKA MULTIFAMILY
1/05/2021
CHASKA, CARVER COUNTY, MINNESOTA

SHEET
##
OF
REV. #

P:\PROJECTS\50521\CAD\SURVEY\SHEETS\50521-EXCON.DWG | 1/5/2022 10:21:56 AM | DILLON TEWS, LSIT (MN) | DILLON TEWS (LMS TECH)

DEVELOPMENT SUMMARY

AREA	
GROSS SITE AREA	552,066 SF 12.67 AC
SETBACKS	
FRONT YARD	20FEET
REAR YARD	50 FEET
SIDE YARD	20 FEET
MINIMUM LOT SIZE	2,500 SF
ZONING	
EXISTING ZONING	UNZONED
PROPOSED ZONING	R-3: MULTIPLE FAMILY RESIDENCE
BUILDING REQUIREMENTS	0.40 RATIO
MINIMUM FLOOR AREA	45 FT
MAXIMUM BUILDING HEIGHT	
PARKING SUMMARY	(2 STALLS PER UNIT) 238 STALLS
TOTAL PARKING REQUIRED	(1 STALLS PER UNIT) 113 STALLS
COVERED PARKING PROVIDED	183 STALLS
TOTAL PARKING PROVIDED	113 STALLS
COVERED PARKING PROVIDED	70 STALLS
SURFACE LOT PARKING PROVIDED	

OUTLOT B

DRAINAGE & UTILITY EASEMENT OVER ALL OF OUTLOT B

AVERAGE BUFFER LINE

WETLAND CLASSIFICATION: MANAGE 3
16' AVERAGE & PERMANENT WETLAND BUFFER
10' BUILDING SETBACK
26' TOTAL

10' BUILDING SETBACK

SWAMP AREA

SKIMMER: 938.97

AT GRADE

119 UNIT MULTI-FAMILY RESIDENCE
35,000 S.F.
FFE = 948.50
GFE = 937.50

SB 8 939.7

SB 1 939.4

FES: 30IN RCP 936.38

FES: 18IN RCP 934.15

FES: 15IN RCP 934.45

RE: 943.30
IE: 939.01 N
IE: 934.88 SW
IE: 936.28 SE

RE: 943.22
IE: 939.72

FND IP 44109

RE: 945.54
IE: 928.74 N/S

CLOVER RIDGE DR

(PUBLIC - UNDEDICATED ROAD)

RE: 944
IE: 937.74 N/S

2555.2 1/4"

6' Temporary Construction Fencing - Full Perimeter of the Site

SB 9 949.4

Construction/ Gate/Entrance

Sign to be placed facing Northwest

NO CONSTRUCTION TRAFFIC BEYOND THIS POINT

Sign(s) sold separately

RE: 948.69
IE: 927.65
NW/SE

S26°09'27"E

RE: 945.68
FROZEN
SHUT

20' BUILDING SETBACK

NO BUILDINGS OBSERVED

GARAGE ENTRANCE

SB 3 934.1

SB 7 933.8

SB 2 937.5

SB X 947.3

WETLAND CLASSIFICATION: UNIQUE
50' PERMANENT WETLAND BUFFER
20' BUILDING SETBACK
70' TOTAL

AVERAGE BUFFER LINE

SB 6 937.0

RE: 945.41
TOP OF SNOW

SB 5 942.4

50.0'

MINIMUM BUFFER LINE

MINIMUM BUFFER LINE

FND IP 44109

FES: 18IN RCP 939.81

WEST LINE OF THE SW QUARTER OF SECTION 30, TWP 1N, RNG 2E

CROSSES AND G WEST LINE (1)

SW 1/4

SECTION 30

PIONEER

VISTA

TOWNSHIP 1N

NORTH

0 30 60

SCALE IN FEET

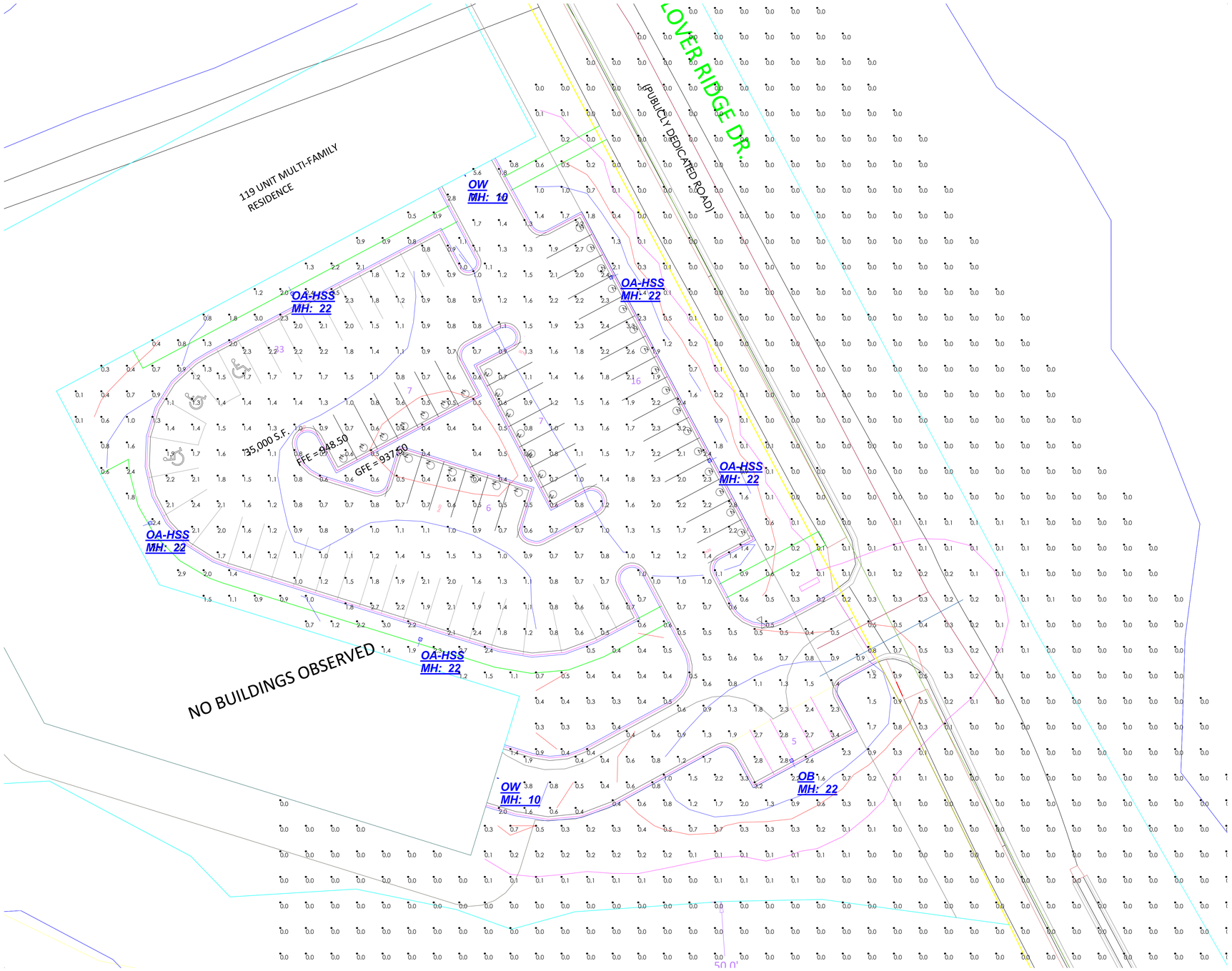

Calculation Summary							
Label	CalcType	Units	Avg	Max	Min	Avg/Min	Max/Min
PARKING AND DRIVE	Illuminance	Fc	1.35	6.1	0.4	3.38	15.25
SITE	Illuminance	Fc	0.17	3.3	0.0	N.A.	N.A.

Luminaire Schedule								
Symbol	Qty	Label	Manufacturer	Description	Arrangement	Lum. Lumens	Lum. Watts	LLF
	5	OA-HSS	COOPER LIGHTING SOLUTIONS - LUMARK (FORMERLY EATON)	PRV-C25-D-UNV-T4-BZ-HSS	Single	11933	96	0.900
	1	OB	COOPER LIGHTING SOLUTIONS - LUMARK (FORMERLY EATON)	PRV-C25-D-UNV-T3-BZ	Single	13183	96	0.900
	2	OW	COOPER LIGHTING SOLUTIONS - LUMARK (FORMERLY EATON)	AXCS2A	Single	2561	20.7	0.900

1. Standard Reflectance of 80/50/20 unless noted otherwise
2. Not a Construction Document, for Design purposes only
3. Standard indoor calc points @ 30" A.F.F. unless noted otherwise
4. Standard outdoor calc points @ Grade unless noted otherwise
5. Egress calc points @ 0" A.F.F.
6. Mlazgar Associates assumes no responsibility for installed light levels due to field conditions, etc.

MLAZGAR ASSOCIATES
16350 W. GLENDALE DR.
NEW BERLIN, WI 53151
(p) 414-943-1915
(f) 952-943-8088
www.mlazgar.com

MLAZGAR ASSOCIATES

#	Date	Comments
Revisions		

RLMA Project #:123005
Drawn By:MB
Date:3/7/2022
Scale:1"=20'-0"

PHOTOMETRIC SITE PLAN

CHASKA SITE
CHASKA, MN

CONSULTANT CONTACT LIST:

DEVELOPER/OWNER
AV DEVELOPMENT LLC
11800 SINGLE TREE LANE, SUITE 301
EDEN PRAIRIE MN 55344
TEL 651-206-4087
EMAIL: VISHALDUTT30@YAHOO.COM
CONTACT: VISHAL DUTT

CIVIL ENGINEER
SAMBATEK
12800 WHITEWATER DRIVE, SUITE 300
MINNETONKA, MN 55343
TEL 763-476-6010
EMAIL: BFRANK@SAMBATEK.COM
CONTACT: BRIAN FRANK

ARCHITECT
J CORP, INC
750 MAIN STREET, #207
MENDOTA HEIGHTS MN 55118
TEL 515-597-5475
EMAIL: HENRY@JCORP.BIZ
CONTACT: HENRY ELGERSMA

SURVEYOR
SAMBATEK
12800 WHITEWATER DRIVE, SUITE 300
MINNETONKA, MN 55343
TEL 612-743-4646
EMAIL: MSALO@SAMBATEK.COM
CONTACT: MARK SALO

GEOTECHNICAL
BRAUN INTERTEC
11001 HAMPSHIRE AVENUE
MINNEAPOLIS MN 55348
TEL 952-995-2000
EMAIL: ASCHULZETENBERG@BRAUNINTERTEC.COM
CONTACT: AARON SCHULZETENBERG

LANDSCAPE ARCHITECT
SAMBATEK
12800 WHITEWATER DRIVE, SUITE 300
MINNETONKA, MN 55343
TEL 763-476-6010
EMAIL: JWORKMAN@SAMBATEK.COM
CONTACT: JOHN WORKMAN

Final Site Plans

for

Clover Ridge Apartments

Chaska, Minnesota

Presented by:
AV Development, LLC

BENCHMARKS

BM NO. 1
SANITARY MANHOLE N. END OF SITE.
ELEV.=965.84

BM NO. 2
SANITARY MANHOLE S. END OF SITE
ELEV.=948.69

SHEET INDEX

SHEET	DESCRIPTION
C1.01	TITLE
C2.01	DEMOLITION PLAN
C3.01	SITE PLAN
C4.01	GRADING PLAN
C4.02	GRADING NOTES
C5.01	PHASE 1 EROSION CONTROL
C5.02	PHASE 2 EROSION CONTROL
C5.03	EROSION NOTES
C5.04	SWPPP
C5.05	SWPPP
C6.01	UTILITY PLAN
C9.01	DETAILS
C9.02	DETAILS
C9.03	DETAILS
L1.01	LANDSCAPE PLAN
L1.02	LANDSCAPE DETAILS AND NOTES

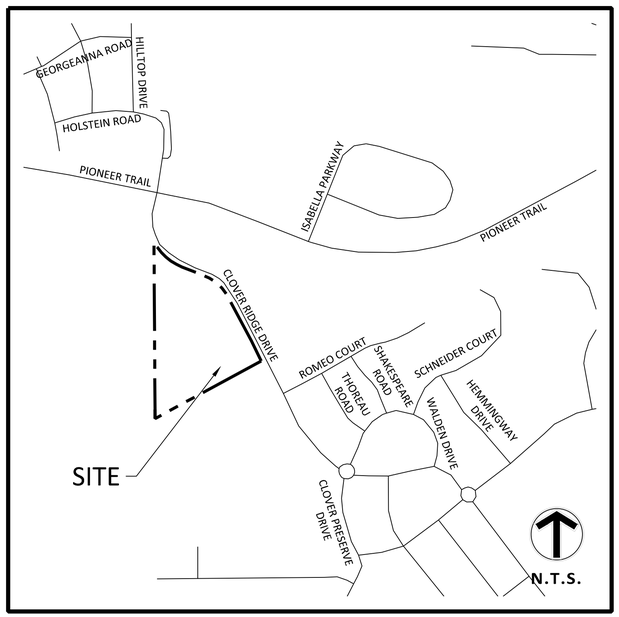

VICINITY MAP
NO SCALE

GOVERNING SPECIFICATIONS

CITY OF CHASKA SPECIFICATIONS (2019)
CITY ENGINEER'S ASSOCIATION OF MINNESOTA STANDARD SPECIFICATIONS (2013)
MNDOT STANDARD SPECIFICATIONS FOR CONSTRUCTION (2018 EDITION)

NO	DATE	BY	CKD	APPR	COMMENT
	05/03/2022				Final Site and Building Plan Application

I hereby certify that this plan, specification, or report was prepared by me or under my direct supervision and that I am a duly Licensed Professional Engineer under the laws of the State of Minnesota.

Print Name: Brian W. Frank

Date _____ License # _____

PRELIMINARY
DESIGN REVIEW
PERMIT SUBMITTAL
CONSTRUCTION DOCUMENTS

DRAWN BY KLS
DESIGNED BY
CHECKED BY
PROJECT NO. 50521

Sambatek
www.sambatek.com
Engineering | Surveying | Planning | Environmental

TITLE

AV DEVELOPMENT, LLC
CLOVER RIDGE APARTMENTS

CHASKA, MINNESOTA

SHEET
C1.01
1 OF 10
REV.

© 2021 Sambatek

P:\PROJECTS\50521\CAD\CIVIL\SHEETS\50521-C1-TITLE.DWG;C1.01 - TITLE | 5/3/2022 9:21:05 AM | ALEA STUTZ | R2.0S (LMS TECH)

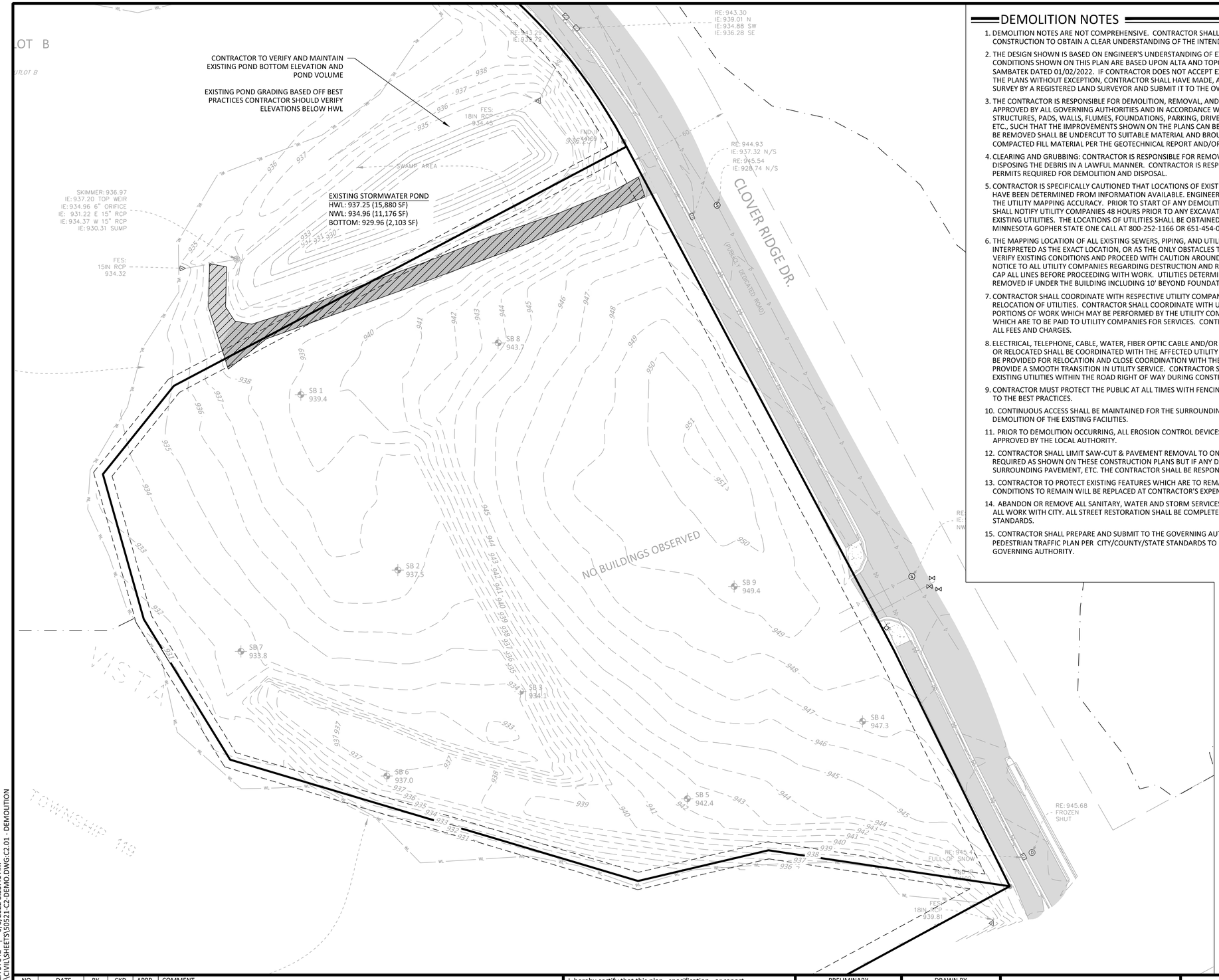

DEMOLITION NOTES

1. DEMOLITION NOTES ARE NOT COMPREHENSIVE. CONTRACTOR SHALL VISIT THE SITE PRIOR TO CONSTRUCTION TO OBTAIN A CLEAR UNDERSTANDING OF THE INTENDED SCOPE OF WORK.
2. THE DESIGN SHOWN IS BASED ON ENGINEER'S UNDERSTANDING OF EXISTING CONDITIONS. THE EXISTING CONDITIONS SHOWN ON THIS PLAN ARE BASED UPON ALTA AND TOPOGRAPHIC MAPPING PREPARED BY SAMBATEK DATED 01/02/2022. IF CONTRACTOR DOES NOT ACCEPT EXISTING TOPOGRAPHY AS SHOWN ON THE PLANS WITHOUT EXCEPTION, CONTRACTOR SHALL HAVE MADE, AT OWN EXPENSE, A TOPOGRAPHIC SURVEY BY A REGISTERED LAND SURVEYOR AND SUBMIT IT TO THE OWNER FOR REVIEW.
3. THE CONTRACTOR IS RESPONSIBLE FOR DEMOLITION, REMOVAL, AND DISPOSING IN A LOCATION APPROVED BY ALL GOVERNING AUTHORITIES AND IN ACCORDANCE WITH APPLICABLE CODES, OF ALL STRUCTURES, PADS, WALLS, FLUMES, FOUNDATIONS, PARKING, DRIVES, DRAINAGE STRUCTURES, UTILITIES, ETC., SUCH THAT THE IMPROVEMENTS SHOWN ON THE PLANS CAN BE CONSTRUCTED. ALL FACILITIES TO BE REMOVED SHALL BE UNDERCUT TO SUITABLE MATERIAL AND BROUGHT TO GRADE WITH SUITABLE COMPACTED FILL MATERIAL PER THE GEOTECHNICAL REPORT AND/OR GEOTECHNICAL ENGINEER.
4. CLEARING AND GRUBBING: CONTRACTOR IS RESPONSIBLE FOR REMOVING ALL DEBRIS FROM THE SITE AND DISPOSING THE DEBRIS IN A LAWFUL MANNER. CONTRACTOR IS RESPONSIBLE FOR OBTAINING ALL PERMITS REQUIRED FOR DEMOLITION AND DISPOSAL.
5. CONTRACTOR IS SPECIFICALLY CAUTIONED THAT LOCATIONS OF EXISTING UTILITIES SHOWN ON THIS PLAN HAVE BEEN DETERMINED FROM INFORMATION AVAILABLE. ENGINEER ASSUMES NO RESPONSIBILITY FOR THE UTILITY MAPPING ACCURACY. PRIOR TO START OF ANY DEMOLITION ACTIVITY, THE CONTRACTOR SHALL NOTIFY UTILITY COMPANIES 48 HOURS PRIOR TO ANY EXCAVATION FOR ON-SITE LOCATIONS OF EXISTING UTILITIES. THE LOCATIONS OF UTILITIES SHALL BE OBTAINED BY THE CONTRACTOR BY CALLING MINNESOTA GOPHER STATE ONE CALL AT 800-252-1166 OR 651-454-0002.
6. THE MAPPING LOCATION OF ALL EXISTING SEWERS, PIPING, AND UTILITIES SHOWN ARE NOT TO BE INTERPRETED AS THE EXACT LOCATION, OR AS THE ONLY OBSTACLES THAT MAY OCCUR ON THE SITE. VERIFY EXISTING CONDITIONS AND PROCEED WITH CAUTION AROUND ANY ANTICIPATED FEATURES. GIVE NOTICE TO ALL UTILITY COMPANIES REGARDING DESTRUCTION AND REMOVAL OF ALL SERVICE LINES AND CAP ALL LINES BEFORE PROCEEDING WITH WORK. UTILITIES DETERMINED TO BE ABANDONED SHALL BE REMOVED IF UNDER THE BUILDING INCLUDING 10' BEYOND FOUNDATIONS.
7. CONTRACTOR SHALL COORDINATE WITH RESPECTIVE UTILITY COMPANIES PRIOR TO REMOVAL AND/OR RELOCATION OF UTILITIES. CONTRACTOR SHALL COORDINATE WITH UTILITY COMPANIES CONCERNING PORTIONS OF WORK WHICH MAY BE PERFORMED BY THE UTILITY COMPANIES' FORCES AND ANY FEES WHICH ARE TO BE PAID TO UTILITY COMPANIES FOR SERVICES. CONTRACTOR IS RESPONSIBLE FOR PAYING ALL FEES AND CHARGES.
8. ELECTRICAL, TELEPHONE, CABLE, WATER, FIBER OPTIC CABLE AND/OR GAS LINES NEEDING TO BE REMOVED OR RELOCATED SHALL BE COORDINATED WITH THE AFFECTED UTILITY COMPANY. ADEQUATE TIME SHALL BE PROVIDED FOR RELOCATION AND CLOSE COORDINATION WITH THE UTILITY COMPANY IS NECESSARY TO PROVIDE A SMOOTH TRANSITION IN UTILITY SERVICE. CONTRACTOR SHALL PAY CLOSE ATTENTION TO EXISTING UTILITIES WITHIN THE ROAD RIGHT OF WAY DURING CONSTRUCTION.
9. CONTRACTOR MUST PROTECT THE PUBLIC AT ALL TIMES WITH FENCING, BARRICADES, ENCLOSURES, ETC., TO THE BEST PRACTICES.
10. CONTINUOUS ACCESS SHALL BE MAINTAINED FOR THE SURROUNDING PROPERTIES AT ALL TIMES DURING DEMOLITION OF THE EXISTING FACILITIES.
11. PRIOR TO DEMOLITION OCCURRING, ALL EROSION CONTROL DEVICES ARE TO BE INSTALLED AND APPROVED BY THE LOCAL AUTHORITY.
12. CONTRACTOR SHALL LIMIT SAW-CUT & PAVEMENT REMOVAL TO ONLY THOSE AREAS WHERE IT IS REQUIRED AS SHOWN ON THESE CONSTRUCTION PLANS BUT IF ANY DAMAGE IS INCURRED ON ANY OF THE SURROUNDING PAVEMENT, ETC. THE CONTRACTOR SHALL BE RESPONSIBLE FOR ITS REMOVAL AND REPAIR.
13. CONTRACTOR TO PROTECT EXISTING FEATURES WHICH ARE TO REMAIN. DAMAGE TO ANY EXISTING CONDITIONS TO REMAIN WILL BE REPLACED AT CONTRACTOR'S EXPENSE.
14. ABANDON OR REMOVE ALL SANITARY, WATER AND STORM SERVICES PER CITY STANDARDS. COORDINATE ALL WORK WITH CITY. ALL STREET RESTORATION SHALL BE COMPLETED IN COMPLIANCE WITH LOCAL STANDARDS.
15. CONTRACTOR SHALL PREPARE AND SUBMIT TO THE GOVERNING AUTHORITY A TRAFFIC AND/OR PEDESTRIAN TRAFFIC PLAN PER CITY/COUNTY/STATE STANDARDS TO BE APPROVED BY THE LOCAL GOVERNING AUTHORITY.

LEGEND

EXISTING

- GAS METER
- HYDRANT
- LIGHT
- STORM SEWER
- DRAINTILE
- WATERMAIN
- FORCEMAIN (SAN.)
- SANITARY SEWER
- OVERHEAD ELECTRIC WIRE
- UNDERGROUND TELEPHONE
- UNDERGROUND CABLE TV
- ELECTRIC UNDERGROUND
- GAS LINE
- WIRE FENCE
- IRON FENCE
- WOOD FENCE
- CHAIN LINK FENCE
- STONE RETAINING WALL
- SPRINKLER HEAD
- SPRINKLER VALVE
- GUARDRAIL
- HANDRAIL
- TREE LINE
- GUARD POST
- SIGN
- CONCRETE CURB
- BUILDING LINE
- REMOVE UTILITY STRUCTURE
- REMOVE EXISTING CONCRETE CURB
- SAW CUT EXISTING BITUMINOUS PAVEMENT
- REMOVE EXISTING BITUMINOUS PAVEMENT
- REMOVE EXISTING CONCRETE PAVEMENT
- REMOVE EXISTING GRAVEL DRIVE
- REMOVE EXISTING LANDSCAPING
- REMOVE EXISTING BUILDING
- DEMO TREE
- REMOVE EXISTING (DEMO LG)
- REMOVE UTILITY STRUCTURE
- DEMO LIGHT
- REMOVE CHAIN LINK FENCE

THE SUBSURFACE UTILITY INFORMATION SHOWN ON THESE PLANS IS A UTILITY QUALITY LEVEL D. THIS QUALITY LEVEL WAS DETERMINED ACCORDING TO THE GUIDELINES OF ASCE/CI 38-02, TITLED "STANDARD GUIDELINES FOR THE COLLECTION AND DEPICTION OF EXISTING SUBSURFACE UTILITY DATA." THE CONTRACTOR AND/OR SUBCONTRACTORS SHALL DETERMINE THE EXACT LOCATION OF ALL EXISTING UTILITIES BEFORE COMMENCING WORK, BY CONTACTING THE NOTIFICATION CENTER (GOPHER STATE ONE FOR MINNESOTA). THE CONTRACTOR AND/OR SUBCONTRACTOR AGREE TO BE FULLY RESPONSIBLE FOR ANY AND ALL DAMAGES, WHICH MIGHT BE OCCASIONED BY HIS OR HER FAILURE TO EXACTLY LOCATE AND PRESERVE ANY AND ALL UTILITIES (UNDERGROUND AND OVERHEAD).

IT SHALL BE THE RESPONSIBILITY OF THE CONTRACTOR TO RELOCATE ALL EXISTING UTILITIES WHICH CONFLICT WITH THE PROPOSED IMPROVEMENTS SHOWN ON THE PLANS.

NORTH

0 30 60

SCALE IN FEET

NO	DATE	BY	CKD	APPR	COMMENT
	05/03/2022				Final Site and Building Plan Application

I hereby certify that this plan, specification, or report was prepared by me or under my direct supervision and that I am a duly Licensed Professional Engineer under the laws of the State of Minnesota.

Print Name: Brian W. Frank

Date _____ License # _____

PRELIMINARY | DESIGN REVIEW | PERMIT SUBMITTAL | CONSTRUCTION DOCUMENTS

DRAWN BY KLS | DESIGNED BY | CHECKED BY | PROJECT NO. 50521

Sambatek
www.sambatek.com
Engineering | Surveying | Planning | Environmental

DEMOLITION PLAN

AV DEVELOPMENT, LLC
CLOVER RIDGE APARTMENTS

CHASKA, MINNESOTA

SHEET C2.01 2 OF 10 REV.

C:\PROJECTS\50521\CADCIVIL\SHEETS\50521-C2-DEMO.DWG, 5/3/2022 8:55:41 AM, ALEA STUTZ | ALEA (LMS TECH)
© 2021 Sambatek

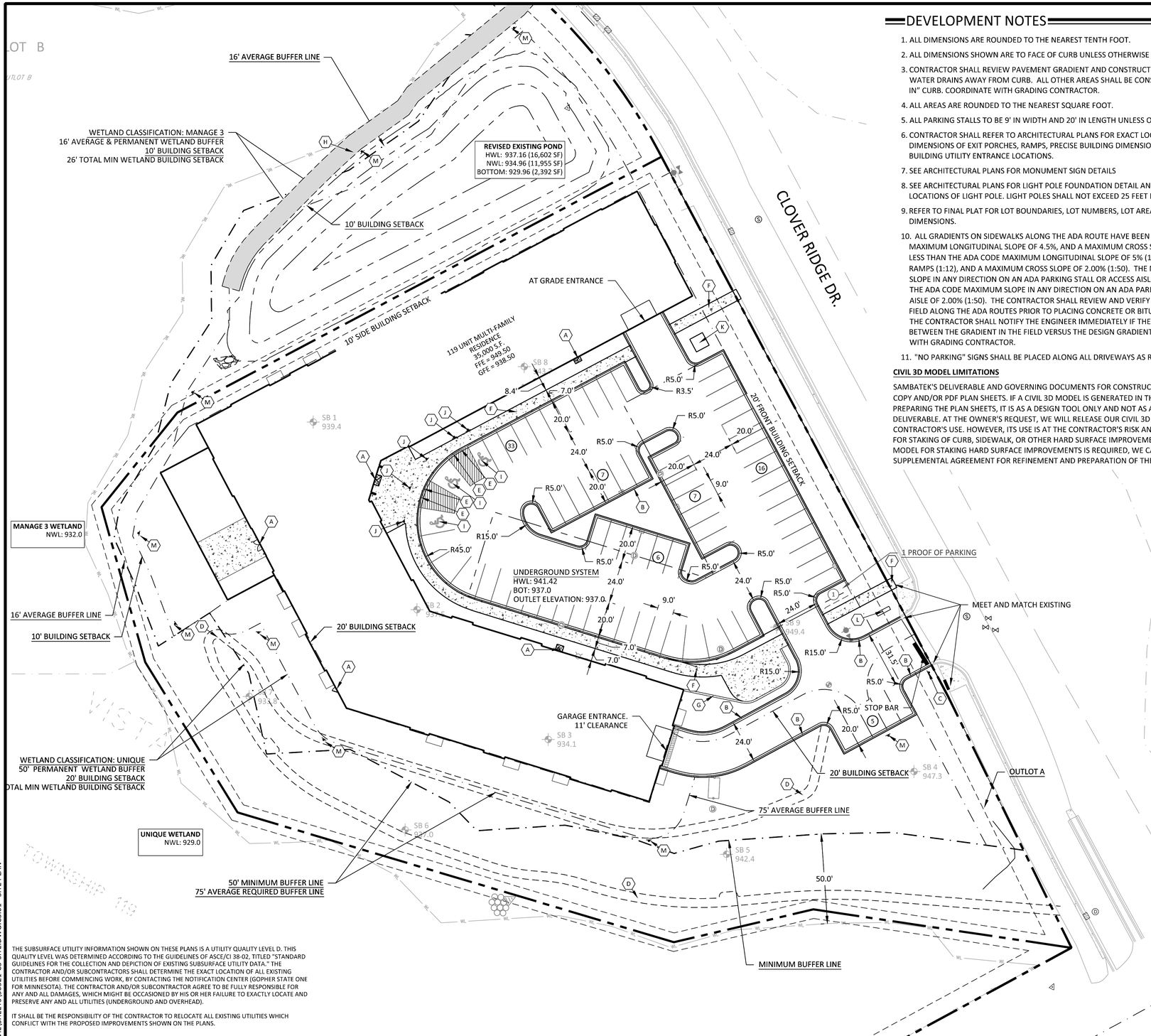

DEVELOPMENT NOTES

1. ALL DIMENSIONS ARE ROUNDED TO THE NEAREST TENTH FOOT.
2. ALL DIMENSIONS SHOWN ARE TO FACE OF CURB UNLESS OTHERWISE NOTED.
3. CONTRACTOR SHALL REVIEW PAVEMENT GRADIENT AND CONSTRUCT "GUTTER OUT" WHERE WATER DRAINS AWAY FROM CURB. ALL OTHER AREAS SHALL BE CONSTRUCTED AS "GUTTER IN" CURB. COORDINATE WITH GRADING CONTRACTOR.
4. ALL AREAS ARE ROUNDED TO THE NEAREST SQUARE FOOT.
5. ALL PARKING STALLS TO BE 9' IN WIDTH AND 20' IN LENGTH UNLESS OTHERWISE INDICATED.
6. CONTRACTOR SHALL REFER TO ARCHITECTURAL PLANS FOR EXACT LOCATIONS AND DIMENSIONS OF EXIT PORCHES, RAMPS, PRECISE BUILDING DIMENSIONS AND EXACT BUILDING UTILITY ENTRANCE LOCATIONS.
7. SEE ARCHITECTURAL PLANS FOR MONUMENT SIGN DETAILS
8. SEE ARCHITECTURAL PLANS FOR LIGHT POLE FOUNDATION DETAIL AND FOR EXACT LOCATIONS OF LIGHT POLE. LIGHT POLES SHALL NOT EXCEED 25 FEET IN HEIGHT.
9. REFER TO FINAL PLAT FOR LOT BOUNDARIES, LOT NUMBERS, LOT AREAS, AND LOT DIMENSIONS.
10. ALL GRADIENTS ON SIDEWALKS ALONG THE ADA ROUTE HAVE BEEN DESIGNED WITH A MAXIMUM LONGITUDINAL SLOPE OF 4.5%, AND A MAXIMUM CROSS SLOPE OF 1.5%. THIS IS LESS THAN THE ADA CODE MAXIMUM LONGITUDINAL SLOPE OF 5% (1:20), EXCEPT AT CURB RAMPS (1:12), AND A MAXIMUM CROSS SLOPE OF 2.00% (1:50). THE MAXIMUM DESIGN SLOPE IN ANY DIRECTION ON AN ADA PARKING STALL OR ACCESS AISLE IS 1.5%, LESS THAN THE ADA CODE MAXIMUM SLOPE IN ANY DIRECTION ON AN ADA PARKING STALL OR ACCESS AISLE OF 2.00% (1:50). THE CONTRACTOR SHALL REVIEW AND VERIFY THE GRADIENT IN THE FIELD ALONG THE ADA ROUTES PRIOR TO PLACING CONCRETE OR BITUMINOUS PAVEMENT. THE CONTRACTOR SHALL NOTIFY THE ENGINEER IMMEDIATELY IF THERE IS A DISCREPANCY BETWEEN THE GRADIENT IN THE FIELD VERSUS THE DESIGN GRADIENT AND COORDINATE WITH GRADING CONTRACTOR.
11. "NO PARKING" SIGNS SHALL BE PLACED ALONG ALL DRIVEWAYS AS REQUIRED BY CITY.

CIVIL 3D MODEL LIMITATIONS

SAMBATEK'S DELIVERABLE AND GOVERNING DOCUMENTS FOR CONSTRUCTION SHALL BE A HARD COPY AND/OR PDF PLAN SHEETS. IF A CIVIL 3D MODEL IS GENERATED IN THE PROCESS OF PREPARING THE PLAN SHEETS, IT IS AS A DESIGN TOOL ONLY AND NOT AS A SEPARATE DELIVERABLE. AT THE OWNER'S REQUEST, WE WILL RELEASE OUR CIVIL 3D MODEL FOR THE CONTRACTOR'S USE. HOWEVER, ITS USE IS AT THE CONTRACTOR'S RISK AND SHALL NOT BE USED FOR STAKING OF CURB, SIDEWALK, OR OTHER HARD SURFACE IMPROVEMENTS. IF A CIVIL 3D MODEL FOR STAKING HARD SURFACE IMPROVEMENTS IS REQUIRED, WE CAN PROVIDE A SUPPLEMENTAL AGREEMENT FOR REFINEMENT AND PREPARATION OF THE CIVIL 3D MODEL.

LEGEND

PROPOSED	EXISTING	
		BOUNDARY LINE
		CONCRETE CURB
		EASEMENT LINE
		BUILDING LINE
		RETAINING WALL
	WT	WET LAND
		TREE LINE
		SAW CUT LINE
		SIGN
		BOLLARD
##		REGULAR PARKING STALL COUNT
1		KEYNOTE

- STANDARD DUTY ASPHALT PAVING
- HEAVY DUTY ASPHALT PAVING
- CONCRETE PAVING
- CONCRETE SIDEWALK
- PAVEMENT BY OTHERS (SEE ARCHITECTURAL PLANS)
- TURF REINFORCEMENT MAT

DEVELOPMENT SUMMARY

AREA	
GROSS SITE AREA	552,066 SF 12.67 AC
SETBACKS	
FRONT YARD	30 FEET, 20 FEET REQUESTED
REAR YARD	50 FEET
SIDE YARD	10 FEET
ZONING	
EXISTING ZONING	R: RURAL
PROPOSED ZONING	PRD: PLANNED RESIDENTIAL DEVELOPMENT
BUILDING REQUIREMENTS	
MINIMUM FLOOR AREA	0.50
MAXIMUM BUILDING HEIGHT	45 FT
PARKING SUMMARY	
TOTAL PARKING REQUIRED (PER ORDINANCE)	240 STALLS
TOTAL PARKING REQUIRED (PER PARKING DEMAND MEMO)	119 STALLS
TOTAL PARKING PROVIDED	194 STALLS
COVERED PARKING PROVIDED	120 STALLS
SURFACE LOT PARKING PROVIDED	74 STALLS
PROOF OF PARKING	1 STALLS

KEY NOTES

A. BUILDING, STOOPS, STAIRS (SEE ARCHITECTURAL PLANS)
B. B-612 CONCRETE CURB AND GUTTER (SEE DETAIL 01, SHEET C9.02)
C. STOP SIGN
D. CRUSHED AGGREGATE PATH
E. FLAT CURB SECTION (SEE DETAIL 06, SHEET C9.02)
F. CONCRETE SIDEWALK (SEE DETAIL 02, SHEET C9.02)
G. SEGMENTAL BLOCK RETAINING WALL
H. GRASS PAVERS ACCESS TRAIL
I. ACCESSIBLE STALL STRIPING (SEE DETAIL 04, SHEET C9.02)
J. ACCESSIBLE PARKING SIGN (SEE DETAIL 05, SHEET C9.02)
K. TRANSFORMER
L. MONUMENT SIGN
M. WETLAND BUFFER SIGN

WETLAND DEVELOPMENT SUMMARY

REQUIRED BUFFER	
MANAGE 3	6,816 SF
UNIQUE	39,832 SF
TOTAL	46,648 SF
PROVIDED BUFFER	
MANAGE 3	6,816 SF
UNIQUE	41,522 SF
TOTAL	48,338 SF

NORTH
0 30 60
SCALE IN FEET

THE SUBSURFACE UTILITY INFORMATION SHOWN ON THESE PLANS IS A UTILITY QUALITY LEVEL D. THIS QUALITY LEVEL WAS DETERMINED ACCORDING TO THE GUIDELINES OF ASCE/CI 38-02, TITLED "STANDARD GUIDELINES FOR THE COLLECTION AND DEPICTION OF EXISTING SUBSURFACE UTILITY DATA." THE CONTRACTOR AND/OR SUBCONTRACTORS SHALL DETERMINE THE EXACT LOCATION OF ALL EXISTING UTILITIES BEFORE COMMENCING WORK, BY CONTACTING THE NOTIFICATION CENTER (GOPHER STATE ONE FOR MINNESOTA). THE CONTRACTOR AND/OR SUBCONTRACTOR AGREE TO BE FULLY RESPONSIBLE FOR ANY AND ALL DAMAGES, WHICH MIGHT BE OCCASIONED BY HIS OR HER FAILURE TO EXACTLY LOCATE AND PRESERVE ANY AND ALL UTILITIES (UNDERGROUND AND OVERHEAD).

IT SHALL BE THE RESPONSIBILITY OF THE CONTRACTOR TO RELOCATE ALL EXISTING UTILITIES WHICH CONFLICT WITH THE PROPOSED IMPROVEMENTS SHOWN ON THE PLANS.

NO	DATE	BY	CKD	APPR	COMMENT
	05/03/2022				Final Site and Building Plan Application

I hereby certify that this plan, specification, or report was prepared by me or under my direct supervision and that I am a duly Licensed Professional Engineer under the laws of the State of Minnesota.

Print Name: Brian W. Frank

Date _____ License # _____

PRELIMINARY | DESIGN REVIEW | PERMIT SUBMITTAL | CONSTRUCTION DOCUMENTS

DRAWN BY KLS | DESIGNED BY | CHECKED BY | PROJECT NO. 50521

Sambatek
www.sambatek.com
Engineering | Surveying | Planning | Environmental

SITE PLAN

AV DEVELOPMENT, LLC
CLOVER RIDGE APARTMENTS

CHASKA, MINNESOTA

SHEET C3.01 3 OF 10 REV.

© 2021 Sambatek

C:\PROJECTS\50521\CAD\CIVIL\SHEETS\50521-C3-SITE.DWG;C3.01 - SITE PLAN | 5/3/2022 12:31:16 PM | ALEA STUTZ | LMS TECH)

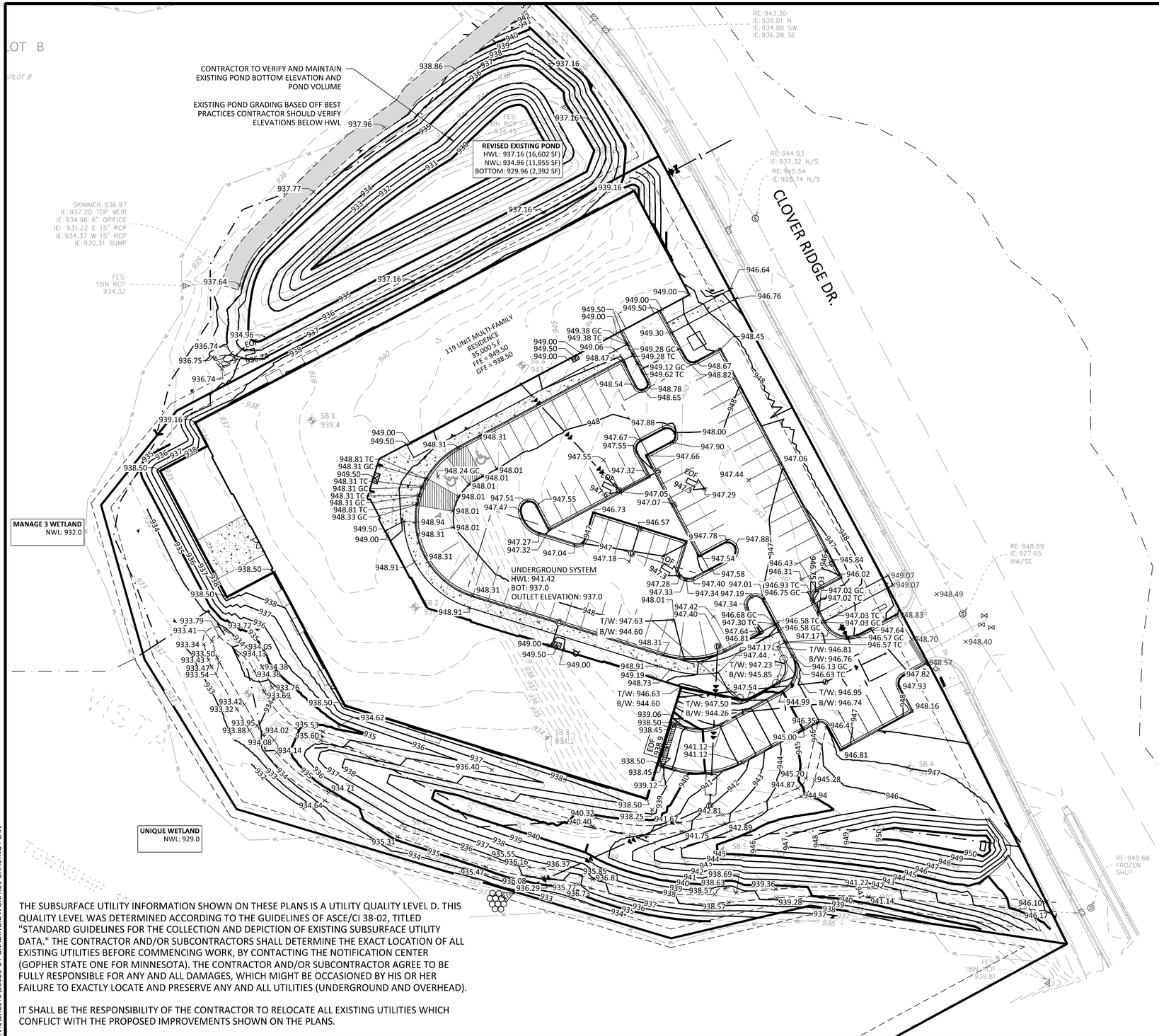

LEGEND

PROPOSED	EXISTING	
		PROPERTY LINE
		CONCRETE CURB
D	D	STORM SEWER
		DRAINTILE
		BUILDING LINE
		RETAINING WALL
	WL	WETLAND LIMITS
	800	TREE LINE / SPOT ELEVATIONS
		RIPRAP
EOF 902.5		OVERFLOW ELEV.
	ST # 999.9	SOIL BORING

- STANDARD DUTY ASPHALT PAVING
- HEAVY DUTY ASPHALT PAVING
- CONCRETE PAVING
- CONCRETE SIDEWALK
- PAVEMENT BY OTHERS (SEE ARCHITECTURAL PLANS)

GRADING NOTES

SEE PAGE C4.02 FOR GRADING NOTES

THE SUBSURFACE UTILITY INFORMATION SHOWN ON THESE PLANS IS A UTILITY QUALITY LEVEL D. THIS QUALITY LEVEL WAS DETERMINED ACCORDING TO THE GUIDELINES OF ASCE/CI 38-02, TITLED "STANDARD GUIDELINES FOR THE COLLECTION AND DEPICTION OF EXISTING SUBSURFACE UTILITY DATA." THE CONTRACTOR AND/OR SUBCONTRACTORS SHALL DETERMINE THE EXACT LOCATION OF ALL EXISTING UTILITIES BEFORE COMMENCING WORK, BY CONTACTING THE NOTIFICATION CENTER (GOPHER STATE ONE FOR MINNESOTA). THE CONTRACTOR AND/OR SUBCONTRACTOR AGREE TO BE FULLY RESPONSIBLE FOR ANY AND ALL DAMAGES, WHICH MIGHT BE OCCASIONED BY HIS OR HER FAILURE TO EXACTLY LOCATE AND PRESERVE ANY AND ALL UTILITIES (UNDERGROUND AND OVERHEAD).

IT SHALL BE THE RESPONSIBILITY OF THE CONTRACTOR TO RELOCATE ALL EXISTING UTILITIES WHICH CONFLICT WITH THE PROPOSED IMPROVEMENTS SHOWN ON THE PLANS.

NORTH

0 30 60
SCALE IN FEET

NO	DATE	BY	CKD	APPR	COMMENT
	05/03/2022				Final Site and Building Plan Application

I hereby certify that this plan, specification, or report was prepared by me or under my direct supervision and that I am a duly Licensed Professional Engineer under the laws of the State of Minnesota.

Print Name: Brian W. Frank

Date _____ License # _____

PRELIMINARY | DESIGN REVIEW | PERMIT SUBMITTAL | CONSTRUCTION DOCUMENTS

DRAWN BY: KLS
DESIGNED BY:
CHECKED BY:
PROJECT NO. 50521

Sambatek
www.sambatek.com
Engineering | Surveying | Planning | Environmental

GRADING PLAN

AV DEVELOPMENT, LLC
CLOVER RIDGE APARTMENTS

CHASKA, MINNESOTA

SHEET
C4.01
4 OF 10
REV.

© 2021 Sambatek

C4.05 (LMS TECH) | ALEA STUTZ | 5/3/2022 9:09:27 AM
J:\PROJECTS\50521\CAD\CIVIL\SHEETS\50521-C4-GRADING.DWG:C4.01 GRADING PLAN

GRADING NOTES

1. PROPOSED CONTOURS ARE TO FINISHED SURFACE ELEVATION. SPOT ELEVATIONS ALONG PROPOSED CURB DENOTE GUTTER GRADE.
2. CONTRACTOR SHALL REVIEW PAVEMENT GRADIENT AND CONSTRUCT "GUTTER OUT" WHERE WATER DRAINS AWAY FROM CURB. ALL OTHER AREAS SHALL BE CONSTRUCTED AS "GUTTER IN" CURB.
3. ALL GRADIENT ON SIDEWALKS ALONG THE ADA ROUTE SHALL HAVE A MAXIMUM LONGITUDINAL SLOPE OF 5% (1:20), EXCEPT AT CURB RAMPS (1:12), AND A MAXIMUM CROSS SLOPE OF 2.00% (1:50). MAXIMUM SLOPE IN ANY DIRECTION ON AN ADA PARKING STALL OR ACCESS AISLE SHALL BE IN 2.00% (1:50). CONTRACTOR SHALL REVIEW AND VERIFY THE GRADIENT IN THE FIELD ALONG THE ADA ROUTES PRIOR TO PLACING CONCRETE OR BITUMINOUS. CONTRACTOR SHALL NOTIFY THE ENGINEER IMMEDIATELY IF THERE IS A DISCREPANCY BETWEEN THE GRADIENT IN THE FIELD VERSUS THE DESIGN GRADIENT. COORDINATE ALL WORK WITH PAVING CONTRACTOR.
4. CONTRACTOR SHALL TAKE ALL PRECAUTIONS NECESSARY TO AVOID PROPERTY DAMAGE TO ADJACENT PROPERTIES DURING THE CONSTRUCTION PHASES OF THIS PROJECT. CONTRACTOR WILL BE HELD SOLELY RESPONSIBLE FOR ANY DAMAGES TO THE ADJACENT PROPERTIES OCCURRING DURING THE CONSTRUCTION PHASES OF THIS PROJECT.
5. SAFETY NOTICE TO CONTRACTORS: IN ACCORDANCE WITH GENERALLY ACCEPTED CONSTRUCTION PRACTICES, CONTRACTOR WILL BE SOLELY AND COMPLETELY RESPONSIBLE FOR CONDITIONS ON THE JOB SITE, INCLUDING SAFETY OF ALL PERSONS AND PROPERTY DURING PERFORMANCE OF THE WORK. THIS REQUIREMENT WILL APPLY CONTINUOUSLY AND NOT BE LIMITED TO NORMAL WORKING HOURS. THE DUTY OF THE ENGINEER OR THE DEVELOPER TO CONDUCT CONSTRUCTION REVIEW OF THE CONTRACTOR'S PERFORMANCE IS NOT INTENDED TO INCLUDE REVIEW OF THE ADEQUACY OF THE CONTRACTOR'S SAFETY MEASURES IN, ON OR NEAR THE CONSTRUCTION SITE.
6. CONTRACTOR SHALL COMPLETE THE SITE GRADING CONSTRUCTION IN ACCORDANCE WITH THE REQUIREMENTS OF THE OWNER'S SOILS ENGINEER. ALL SOIL TESTING SHALL BE COMPLETED BY THE OWNER'S SOILS ENGINEER. CONTRACTOR SHALL BE RESPONSIBLE FOR COORDINATING ALL REQUIRED SOIL TESTS AND INSPECTIONS WITH THE SOILS ENGINEER.

   A GEOTECHNICAL ENGINEERING SOILS REPORT HAS BEEN COMPLETED BY:

   COMPANY: BRAUN INTERTEC

   ADDRESS: 11001 HAMPSHIRE AVENUE SOUTH, MINNEAPOLIS, MN 55438

   PHONE: 952.995.2000

   DATE: 03/07/2022

   CONTRACTOR SHALL OBTAIN A COPY OF THE SOILS REPORT.
7. CONTRACTOR SHALL COMPLETE DEWATERING AS REQUIRED TO COMPLETE THE SITE GRADING CONSTRUCTION.
8. PRIOR TO PLACEMENT OF THE AGGREGATE BASE, A TEST ROLL SHALL BE PERFORMED ON THE STREET AND PARKING AREA SUBGRADE. CONTRACTOR SHALL PROVIDE A LOADED TANDEM AXLE TRUCK WITH A GROSS WEIGHT OF 25 TONS. THE TEST ROLLING SHALL BE AT THE DIRECTION OF THE SOILS ENGINEER AND SHALL BE COMPLETED IN AREAS AS DIRECTED BY THE SOILS ENGINEER. CORRECTION OF THE SUBGRADE SOILS SHALL BE COMPLETED IN ACCORDANCE WITH THE REQUIREMENTS OF THE SOILS ENGINEER.
9. REPLACE ALL SUBGRADE SOIL DISTURBED DURING THE CONSTRUCTION THAT HAVE BECOME UNSUITABLE AND WILL NOT PASS A TEST ROLL. REMOVE UNSUITABLE SOIL FROM THE SITE AND IMPORT SUITABLE SOIL AT NO ADDITIONAL COST TO THE OWNER.
10. CONTRACTOR SHALL BE RESPONSIBLE FOR PROVIDING AND MAINTAINING VEHICULAR AND PEDESTRIAN TRAFFIC CONTROL DEVICES SUCH AS BARRICADES, WARNING SIGNS, DIRECTIONAL SIGNS, FLAGMEN AND LIGHTS TO CONTROL THE MOVEMENT OF TRAFFIC WHERE NECESSARY. TRAFFIC CONTROL DEVICES SHALL CONFORM TO APPROPRIATE MINNESOTA DEPARTMENT OF TRANSPORTATION STANDARDS.
11. EXISTING TREES AND OTHER NATURAL VEGETATION WITHIN THE PROJECT AND/OR ADJACENT TO THE PROJECT ARE OF PRIME CONCERN TO THE CONTRACTOR'S OPERATIONS AND SHALL BE A RESTRICTED AREA. CONTRACTOR SHALL PROTECT TREES TO REMAIN AT ALL TIMES. EQUIPMENT SHALL NOT NEEDLESSLY BE OPERATED UNDER NEARBY TREES AND EXTREME CAUTION SHALL BE EXERCISED WHEN WORKING ADJACENT TO TREES. SHOULD ANY PORTION OF THE TREE BRANCHES REQUIRE REMOVAL TO PERMIT OPERATION OF THE CONTRACTOR'S EQUIPMENT, CONTRACTOR SHALL OBTAIN THE SERVICES OF A PROFESSIONAL TREE TRIMMING SERVICE TO TRIM THE TREES PRIOR TO THE BEGINNING OF OPERATION. SHOULD CONTRACTOR'S OPERATIONS RESULT IN THE BREAKING OF ANY LIMBS, THE BROKEN LIMBS SHOULD BE REMOVED IMMEDIATELY AND CUTS SHALL BE PROPERLY PROTECTED TO MINIMIZE ANY LASTING DAMAGE TO THE TREE. NO TREES SHALL BE REMOVED WITHOUT AUTHORIZATION BY THE ENGINEER. COSTS FOR TRIMMING SERVICES SHALL BE CONSIDERED INCIDENTAL TO THE GRADING CONSTRUCTION AND NO SPECIAL PAYMENT WILL BE MADE.
    a. RESTRICTED AREAS SHALL INCLUDE ALL DESIGNATED TREED AREAS OUTSIDE OF THE DESIGNATED CONSTRUCTION ZONE. ALL VEGETATION WITHIN THE RESTRICTED AREAS SHALL REMAIN.
    b. CONTRACTOR SHALL RESTRICT ALL GRADING AND CONSTRUCTION ACTIVITIES TO AREAS DESIGNATED ON THE PLANS. ACTIVITIES WITHIN THE CONSTRUCTION MAY BE RESTRICTED TO A NARROWER WIDTH IN THE FIELD TO SAVE ADDITIONAL TREES AS DIRECTED BY THE OWNER.
    c. ACTIVITIES PROHIBITED OUTSIDE OF THE CONSTRUCTION BOUNDARIES WOULD INCLUDE, BUT NOT BE LIMITED TO: SOIL AND OTHER MATERIAL STOCKPILING, EQUIPMENT OR MACHINERY STORAGE, DRIVING OF ANY VEHICLE, LEAKAGE OR SPILLAGE OF ANY "WASHOUT" OR OTHER TOXIC MATERIAL. THE COLLECTION OF OTHER DEBRIS AND SOIL STOCKPILING WILL BE IN AN AREA DETERMINED ON-SITE BY THE ENGINEER.
    d. ALL RESTRICTED AREAS SHALL BE FENCED OFF WITH BRIGHT ORANGE POLYETHYLENE SAFETY NETTING AND STEEL STAKES AS SHOWN ON THE TREE PROTECTION DETAIL. AT NO TIME SHALL THIS FENCING BE REMOVED OR ACTIVITY OF ANY KIND TAKE PLACE WITHIN IT. FINAL PLACEMENT OF ALL PROTECTIVE FENCING SHALL BE COMPLETE BEFORE ANY WORK COMMENCES ON-SITE.
    e. BEFORE COMMENCING WITH ANY EXCAVATION CONTRACTOR SHALL COMPLETE ALL PREPARATORY WORK REGARDING TREE REMOVAL, ROOT PRUNING, TREE PRUNING AND STUMP REMOVAL TO THE SATISFACTION OF THE OWNER.
    f. PREPARATORY WORK SHALL INCLUDE THE FOLLOWING AND SHALL BE COMPLETED UNDER THE DIRECT SUPERVISION OF THE OWNER'S REPRESENTATIVE:
    i. TREE REMOVAL: CONTRACTOR SHALL FELL THE TREES. AT NO TIME SHALL TREES BE BULLDOZED OUT, BUT SHALL BE CUT DOWN AND STUMPS REMOVED SEPARATELY. PRIOR TO THE FELLING OF ALL TREES, PROPER REMOVAL OF A PORTION OR ALL OF THE CANOPY SHALL BE COMPLETED SO THAT TREES IN THE RESTRICTED AREAS SHALL NOT BE INJURED IN THE PROCESS.
    ii. ROOT PRUNING: BEFORE ANY STUMPS ARE TO BE REMOVED, ALL ROOTS SHALL BE SEVERED FROM ROOTS IN THE RESTRICTED AREAS BY SAW CUTTING WITH A VERMEER DESIGNED FOR ROOT PRUNING, BY HAND, OR WITH A CHAINSAW. TREE ROOTS PROJECTING INTO THE CONSTRUCTION ZONE SHALL BE EXPOSED PRIOR TO ROOT PRUNING WITH SMALL MACHINERY, I.E..., BOBCAT.
    iii. STUMP REMOVAL: AT SUCH TIME THAT ROOTS HAVE BEEN PROPERLY SEVERED, STUMPS MAY BE REMOVED. WHERE REMOVAL OF CERTAIN STUMPS COULD CAUSE DAMAGE TO EXISTING PROTECTED TREES, TREE STUMPS SHALL BE GROUND OUT. ALL STUMP REMOVAL SHALL BE UNDER THE DIRECT SUPERVISION OF THE OWNER'S REPRESENTATIVE.
    iv. TREE PRUNING: PROPER PRUNING OF TREES IN THE RESTRICTED ZONE SHALL BE DIRECTED BY AND SUPERVISION AT ALL TIMES BY THE OWNER'S REPRESENTATIVE.
    g. AN OWNER'S REPRESENTATIVE WILL BE AVAILABLE AT ALL TIMES DURING THE PREPARATORY AND CONSTRUCTION PERIOD.
    h. MULCH RATHER THAN SEED OR SOD WILL BE USED AT THE BASE OF QUALITY TREES TO A PERIMETER DETERMINED BY THE OWNER'S REPRESENTATIVE. AREAS TO BE SEEDED FOR EROSION CONTROL PURPOSES WITHIN THE CONSTRUCTION ZONE ARE TO BE DETERMINED BY THE OWNER'S REPRESENTATIVE. NATURAL GROUND COVER WILL BE MAINTAINED WHEREVER POSSIBLE.
    i. THE USE OF RETAINING WALLS NEAR TREES, IN ADDITION TO THOSE REQUIRED ON THE PLANS SHALL BE DETERMINED IN THE FIELD, BASED ON TREE LOCATIONS AND TOPOGRAPHY.
12. EXCAVATE TOPSOIL FROM AREAS TO BE FURTHER EXCAVATED OR REGRADED AND STOCKPILE IN AREAS DESIGNATED ON THE SITE. CONTRACTOR SHALL SALVAGE ENOUGH TOPSOIL FOR RESPREADING ON THE SITE AS SPECIFIED. EXCESS TOPSOIL SHALL BE PLACED IN EMBANKMENT AREAS, OUTSIDE OF BUILDING PADS, ROADWAYS AND PARKING AREAS. CONTRACTOR SHALL SUBCUT CUT AREAS, WHERE TURF IS TO BE ESTABLISHED, TO A DEPTH OF 6 INCHES. RESPREAD TOPSOIL IN AREAS WHERE TURF IS TO BE ESTABLISHED TO A MINIMUM DEPTH OF 6 INCHES.
13. TRENCH BORROW CONSTRUCTION: IF ALLOWED BY THE OWNER, CONTRACTOR SHALL COMPLETE "TRENCH BORROW" EXCAVATION IN AREAS DIRECTED BY THE ENGINEER IN ORDER TO OBTAIN STRUCTURAL MATERIAL. TREES SHALL NOT BE REMOVED OR DAMAGED AS A RESULT OF THE EXCAVATION, UNLESS APPROVED BY THE ENGINEER. THE EXCAVATION SHALL COMMENCE A MINIMUM OF 10 FEET FROM THE LIMIT OF THE BUILDING PAD. THE EXCAVATION FROM THIS LIMIT SHALL EXTEND AT A MINIMUM SLOPE OF 1 FOOT HORIZONTAL TO 1 FOOT VERTICAL (1:1) DOWNWARD AND OUTWARD FROM THE FINISHED SURFACE GRADE ELEVATION. THE TRENCH BORROW EXCAVATION SHALL BE BACKFILLED TO THE PROPOSED FINISHED GRADE ELEVATION, AND SHALL BE COMPACTED IN ACCORDANCE WITH REQUIREMENTS OF THE QUALITY COMPACTION METHOD AS OUTLINED IN MN/DOT SPECIFICATION 2105.3F2. SNOW FENCE SHALL BE FURNISHED AND PLACED ALONG THE PERIMETER OF THE TRENCH BORROW AREA WHERE THE SLOPES EXCEED 2 FOOT HORIZONTAL TO 1 FOOT VERTICAL (2:1).
14. FINISHED GRADING SHALL BE COMPLETED, CONTRACTOR SHALL UNIFORMLY GRADE AREAS WITHIN LIMITS OF GRADING, INCLUDING ADJACENT TRANSITION AREAS. PROVIDE A SMOOTH FINISHED SURFACE WITHIN SPECIFIED TOLERANCES, WITH UNIFORM LEVELS OR SLOPES BETWEEN POINTS WHERE ELEVATIONS ARE SHOWN, OR BETWEEN SUCH POINTS AND EXISTING GRADES. AREAS THAT HAVE BEEN FINISHED GRADED SHALL BE PROTECTED FROM SUBSEQUENT CONSTRUCTION OPERATIONS, TRAFFIC AND EROSION. REPAIR ALL AREAS THAT HAVE BECOME RUTTED, ERODED OR HAS SETTLED BELOW THE CORRECT GRADE. ALL AREAS DISTURBED BY THE CONTRACTOR'S OPERATIONS SHALL BE RESTORED TO EQUAL OR BETTER THAN ORIGINAL CONDITION OR TO THE REQUIREMENTS OF THE NEW WORK.
15. TOLERANCES
    a. THE RESIDENTIAL BUILDING SUBGRADE FINISHED SURFACE ELEVATION SHALL NOT VARY BY MORE THAN 0.30 FOOT ABOVE, OR 0.30 FOOT BELOW, THE PRESCRIBED ELEVATION AT ANY POINT WHERE MEASUREMENT IS MADE.
    b. THE STREET OR PARKING AREA SUBGRADE FINISHED SURFACE ELEVATION SHALL NOT VARY BY MORE THAN 0.05 FOOT ABOVE, OR 0.10 FOOT BELOW, THE PRESCRIBED ELEVATION OF ANY POINT WHERE MEASUREMENT IS MADE.
    c. AREAS WHICH ARE TO RECEIVE TOPSOIL SHALL BE GRADED TO WITHIN 0.10 FOOT ABOVE OR BELOW THE REQUIRED ELEVATION, UNLESS DIRECTED OTHERWISE BY THE ENGINEER.
    d. TOPSOIL SHALL BE GRADED TO PLUS OR MINUS 1/2 INCH OF THE SPECIFIED THICKNESS.
16. AFTER THE SITE GRADING IS COMPLETED, IF EXCESS OR SHORTAGE OF SOIL MATERIAL EXISTS, CONTRACTOR SHALL TRANSPORT ALL EXCESS SOIL MATERIAL OFF THE SITE TO AN AREA SELECTED BY THE CONTRACTOR, OR IMPORT SUITABLE MATERIAL TO THE SITE.
17. CONTRACTOR SHALL DETERMINE THE LOCATION OF ANY HAUL ROADS THAT MAY BE REQUIRED TO COMPLETE THE SITE GRADING CONSTRUCTION AND SHALL INDICATE HAUL ROADS ON EROSION AND SEDIMENT CONTROL "SITE MAP". CONTRACTOR SHALL COMPLY WITH THE REQUIREMENTS OF THE GOVERNING AUTHORITY OF EACH ROADWAY. CONTRACTOR SHALL POST WHATEVER SECURITY AND COMPLY WITH ALL CONDITIONS WHICH ARE REQUIRED BY EACH GOVERNING AUTHORITY OF EACH ROADWAY.
18. RETAINING WALL(S) SHALL BE CONSTRUCTED OF MODULAR BLOCK MATERIAL. CONTRACTOR SHALL SUBMIT TO THE ENGINEER AND LOCAL AUTHORITY CERTIFIED ENGINEERING DRAWINGS, DESIGN CALCULATIONS AND SOIL BORINGS. THE CERTIFIED ENGINEER FOR THE RETAINING WALL(S) SHALL PROVIDE CONSTRUCTION OBSERVATIONS OF THE RETAINING WALL IMPROVEMENT, AND A LETTER CERTIFYING THE INSTALLATION OF THE WALL(S) WAS CONSTRUCTED IN CONFORMANCE WITH THE PLANS AND SPECIFICATIONS.

CIVIL 3D MODEL LIMITATIONS

SAMBATEK'S DELIVERABLE AND GOVERNING DOCUMENTS FOR CONSTRUCTION SHALL BE A HARD COPY AND/OR PDF PLAN SHEETS. IF A CIVIL 3D MODEL IS GENERATED IN THE PROCESS OF PREPARING THE PLAN SHEETS, IT IS AS A DESIGN TOOL ONLY AND NOT AS A SEPARATE DELIVERABLE. AT THE OWNER'S REQUEST, WE WILL RELEASE OUR CIVIL 3D MODEL FOR THE CONTRACTOR'S USE. HOWEVER, ITS USE IS AT THE CONTRACTOR'S RISK AND SHALL NOT BE USED FOR STAKING OF CURB, SIDEWALK, OR OTHER HARD SURFACE IMPROVEMENTS. IF A CIVIL 3D MODEL FOR STAKING HARD SURFACE IMPROVEMENTS IS REQUIRED, WE CAN PROVIDE A SUPPLEMENTAL AGREEMENT FOR REFINEMENT AND PREPARATION OF THE CIVIL 3D MODEL.

NORTH

0 ## ##
SCALE IN FEET

NO	DATE	BY	CKD	APPR	COMMENT
	05/03/2022				Final Site and Building Plan Application

I hereby certify that this plan, specification, or report was prepared by me or under my direct supervision and that I am a duly Licensed Professional Engineer under the laws of the State of Minnesota.

Print Name: Brian W. Frank

Date _____ License # _____

PRELIMINARY | DESIGN REVIEW | PERMIT SUBMITTAL | CONSTRUCTION DOCUMENTS

DRAWN BY KLS | DESIGNED BY | CHECKED BY | PROJECT NO. 50521

Sambatek
www.sambatek.com
Engineering | Surveying | Planning | Environmental

GRADING NOTES

AV DEVELOPMENT, LLC
CLOVER RIDGE APARTMENTS

CHASKA, MINNESOTA

SHEET
C4.02
4 OF 10
REV.

© 2021 Sambatek

C:\PROJECTS\50521\CADCIVIL\SHEETS\50521-C4-GRADING.DWG:C4.01 GRADING PLAN (2) | 5/3/2022 9:09:27 AM | ALEA STUTZ | LMS TECH)

EROSION CONTROL MATERIALS QUANTITIES

ITEM	UNIT	QUANTITY
SILT FENCE	LINEAR FEET	2,870
CONSTRUCTION ENTRANCE	UNIT	1
INLET PROTECTION DEVICE (IP-1)	UNIT	0
INLET PROTECTION DEVICE (IP-2)	UNIT	2

* REFER TO SHEET C5.03 FOR GENERAL NOTES, MAINTENANCE NOTES, LOCATION MAPS, AND STANDARD DETAILS

LEGEND

PROPOSED EXISTING

- CONCRETE CURB
- STORM SEWER
- DRAINTILE
- CONTOUR
- RIPRAP
- EOF 902.5 — OVERFLOW ELEV.
- BIO-ROLL
- SF — SILT FENCE
- SD — SILT DIKE
- LIMITS OF DISTURBANCE
- ST 5 902.5 — SOIL BORINGS
- 2.0% — DIRECTION OF OVERLAND FLOW
- TEMPORARY DIVERSION DITCH
- CHECK DAM
- LIMITS OF DRAINAGE SUB-BASIN
- IP1 — INLET PROTECTION DEVICE
- TEMPORARY STONE CONSTRUCTION ENGRANCE
- SB — TEMPORARY SEDIMENT BASIN
- TSM — TEMPORARY STABILIZATION MEASURES (SEED, MULCH, MATS OR BLANKETS AS OUTLINED IN THE SWPP)
- TS — TEMPORARY STORAGE AND PARKING AREA

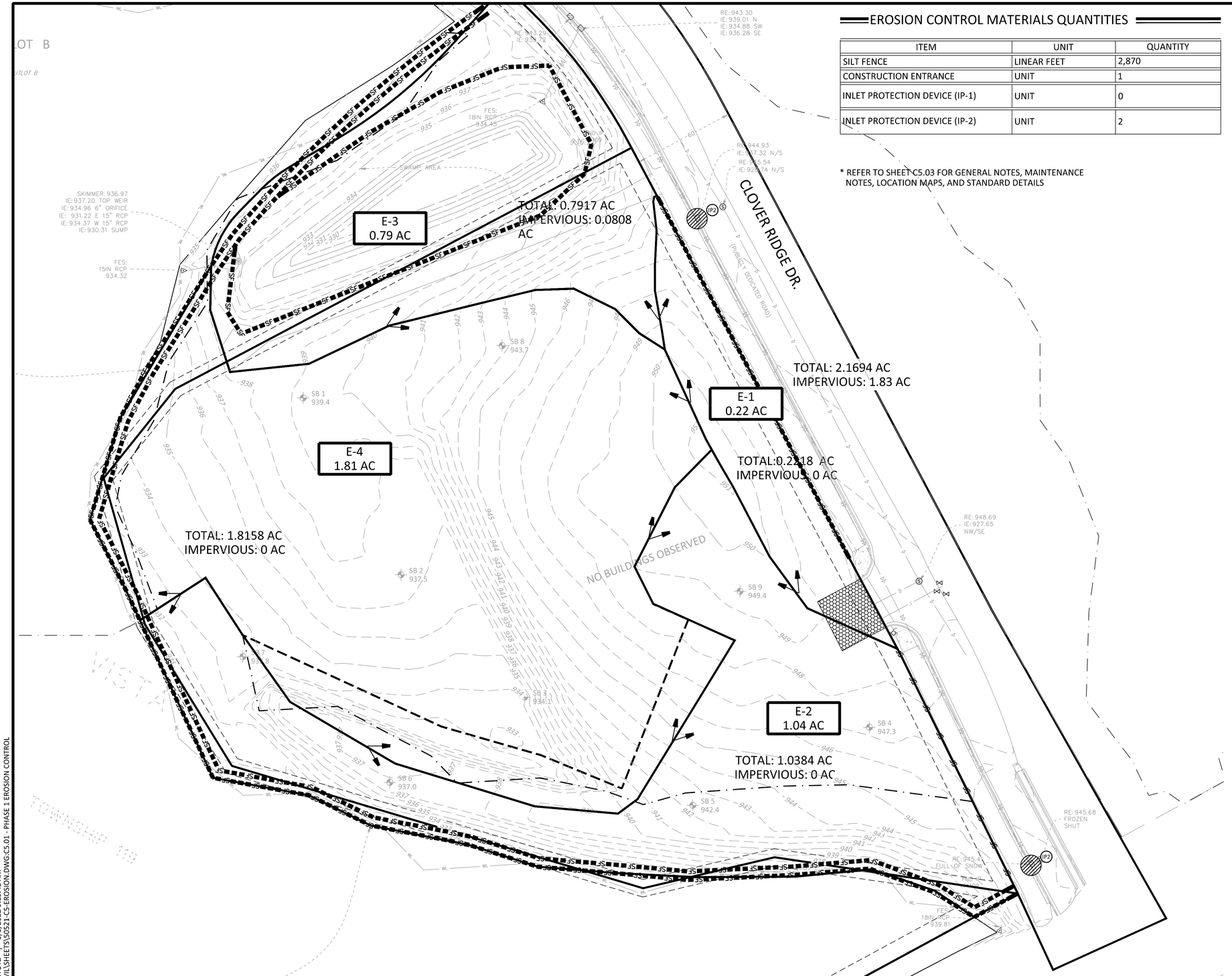

NOTE TO CONTRACTOR

THE EROSION CONTROL PLAN SHEETS ALONG WITH THE REST OF THE SWPPP MUST BE KEPT ONSITE UNTIL THE NOTICE OF TERMINATION IS FILED WITH THE MPCA, THE CONTRACTOR MUST UPDATE THE SWPPP, INCLUDING THE EROSION CONTROL PLAN SHEETS AS NECESSARY TO INCLUDE ADDITIONAL REQUIREMENTS, SUCH AS ADDITIONAL OR MODIFIED BMPS DESIGNED TO CORRECT PROBLEMS IDENTIFIED. AFTER FILING THE NOTICE OF TERMINATION, THE SWPPP, INCLUDING THE EROSION CONTROL PLAN SHEETS, AND ALL REVISIONS TO IT MUST BE SUBMITTED TO THE OWNER, TO BE KEPT ON FILE IN ACCORDANCE WITH THE RECORD RETENTION REQUIREMENTS DESCRIBED IN THE SWPPP NARRATIVE.

THE SUBSURFACE UTILITY INFORMATION SHOWN ON THESE PLANS IS A UTILITY QUALITY LEVEL D. THIS QUALITY LEVEL WAS DETERMINED ACCORDING TO THE GUIDELINES OF ASCE/CI 38-02, TITLED "STANDARD GUIDELINES FOR THE COLLECTION AND DEPICTION OF EXISTING SUBSURFACE UTILITY DATA." THE CONTRACTOR AND/OR SUBCONTRACTORS SHALL DETERMINE THE EXACT LOCATION OF ALL EXISTING UTILITIES BEFORE COMMENCING WORK, BY CONTACTING THE NOTIFICATION CENTER (GOPHER STATE ONE FOR MINNESOTA). THE CONTRACTOR AND/OR SUBCONTRACTOR AGREE TO BE FULLY RESPONSIBLE FOR ANY AND ALL DAMAGES, WHICH MIGHT BE OCCASIONED BY HIS OR HER FAILURE TO EXACTLY LOCATE AND PRESERVE ANY AND ALL UTILITIES (UNDERGROUND AND OVERHEAD).

IT SHALL BE THE RESPONSIBILITY OF THE CONTRACTOR TO RELOCATE ALL EXISTING UTILITIES WHICH CONFLICT WITH THE PROPOSED IMPROVEMENTS SHOWN ON THE PLANS.

NORTH

0 30 60
SCALE IN FEET

NO	DATE	BY	CKD	APPR	COMMENT
	05/03/2022				Final Site and Building Plan Application

I hereby certify that this plan, specification, or report was prepared by me or under my direct supervision and that I am a duly Licensed Professional Engineer under the laws of the State of Minnesota.

Print Name: Brian W. Frank

Date _____ License # _____

PRELIMINARY
DESIGN REVIEW
PERMIT SUBMITTAL
CONSTRUCTION DOCUMENTS

DRAWN BY KLS
DESIGNED BY
CHECKED BY
PROJECT NO. 50521

Sambatek
www.sambatek.com
Engineering | Surveying | Planning | Environmental

PHASE 1 EROSION CONTROL

AV DEVELOPMENT, LLC
CLOVER RIDGE APARTMENTS

CHASKA, MINNESOTA

SHEET
C5.01
6 OF 10
REV.

© 2021 Sambatek

C5.05 (LMS TECH) | ALEA STUTZ | 5/3/2022 9:19:48 AM
J:\PROJECTS\50521\CAD\CIVIL\SHEETS\50521-C5-EROSION.DWG:C5.01 - PHASE 1 EROSION CONTROL

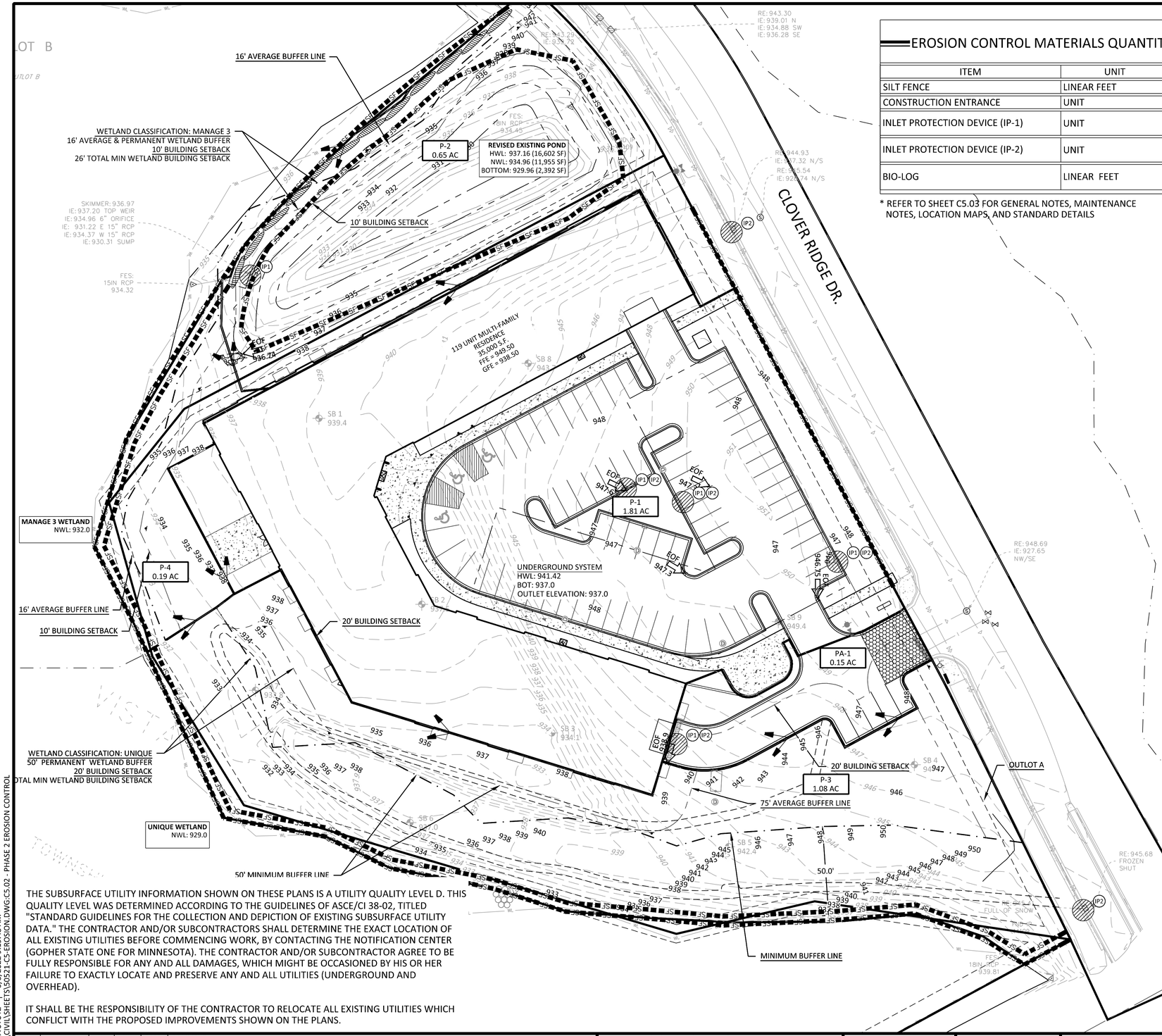

EROSION CONTROL MATERIALS QUANTITIES

ITEM	UNIT	QUANTITY
SILT FENCE	LINEAR FEET	2,692
CONSTRUCTION ENTRANCE	UNIT	1
INLET PROTECTION DEVICE (IP-1)	UNIT	5
INLET PROTECTION DEVICE (IP-2)	UNIT	6
BIO-LOG	LINEAR FEET	224

* REFER TO SHEET C5.03 FOR GENERAL NOTES, MAINTENANCE NOTES, LOCATION MAPS, AND STANDARD DETAILS

LEGEND

PROPOSED EXISTING

- CONCRETE CURB
- STORM SEWER
- DRAINTILE
- CONTOUR
- RIPRAP
- EOF 902.5 — OVERFLOW ELEV.
- BIO-ROLL
- SF — SILT FENCE
- SD — SILT DIKE
- LIMITS OF DISTURBANCE
- ST 5 / 902.5 — SOIL BORINGS
- 2.0% — DIRECTION OF OVERLAND FLOW
- TEMPORARY DIVERSION DITCH
- CHECK DAM
- LIMITS OF DRAINAGE SUB-BASIN
- IP1 — INLET PROTECTION DEVICE
- TEMPORARY STONE CONSTRUCTION ENGRANCE
- SB — TEMPORARY SEDIMENT BASIN
- TSM — TEMPORARY STABILIZATION MEASURES (SEED, MULCH, MATS OR BLANKETS AS OUTLINED IN THE SWPP)
- TS — TEMPORARY STORAGE AND PARKING AREA

NOTE TO CONTRACTOR

THE EROSION CONTROL PLAN SHEETS ALONG WITH THE REST OF THE SWPPP MUST BE KEPT ONSITE UNTIL THE NOTICE OF TERMINATION IS FILED WITH THE MPCA, THE CONTRACTOR MUST UPDATE THE SWPPP, INCLUDING THE EROSION CONTROL PLAN SHEETS AS NECESSARY TO INCLUDE ADDITIONAL REQUIREMENTS, SUCH AS ADDITIONAL OR MODIFIED BMPS DESIGNED TO CORRECT PROBLEMS IDENTIFIED. AFTER FILING THE NOTICE OF TERMINATION, THE SWPPP, INCLUDING THE EROSION CONTROL PLAN SHEETS, AND ALL REVISIONS TO IT MUST BE SUBMITTED TO THE OWNER, TO BE KEPT ON FILE IN ACCORDANCE WITH THE RECORD RETENTION REQUIREMENTS DESCRIBED IN THE SWPPP NARRATIVE.

THE SUBSURFACE UTILITY INFORMATION SHOWN ON THESE PLANS IS A UTILITY QUALITY LEVEL D. THIS QUALITY LEVEL WAS DETERMINED ACCORDING TO THE GUIDELINES OF ASCE/CI 38-02, TITLED "STANDARD GUIDELINES FOR THE COLLECTION AND DEPICTION OF EXISTING SUBSURFACE UTILITY DATA." THE CONTRACTOR AND/OR SUBCONTRACTORS SHALL DETERMINE THE EXACT LOCATION OF ALL EXISTING UTILITIES BEFORE COMMENCING WORK, BY CONTACTING THE NOTIFICATION CENTER (GOPHER STATE ONE FOR MINNESOTA). THE CONTRACTOR AND/OR SUBCONTRACTOR AGREE TO BE FULLY RESPONSIBLE FOR ANY AND ALL DAMAGES, WHICH MIGHT BE OCCASIONED BY HIS OR HER FAILURE TO EXACTLY LOCATE AND PRESERVE ANY AND ALL UTILITIES (UNDERGROUND AND OVERHEAD).

IT SHALL BE THE RESPONSIBILITY OF THE CONTRACTOR TO RELOCATE ALL EXISTING UTILITIES WHICH CONFLICT WITH THE PROPOSED IMPROVEMENTS SHOWN ON THE PLANS.

NO	DATE	BY	CKD	APPR	COMMENT
	05/03/2022				Final Site and Building Plan Application

I hereby certify that this plan, specification, or report was prepared by me or under my direct supervision and that I am a duly Licensed Professional Engineer under the laws of the State of Minnesota.

Print Name: Brian W. Frank

Date _____ License # _____

PRELIMINARY | DESIGN REVIEW | PERMIT SUBMITTAL | CONSTRUCTION DOCUMENTS

DRAWN BY KLS | DESIGNED BY | CHECKED BY | PROJECT NO. 50521

Sambatek
www.sambatek.com
Engineering | Surveying | Planning | Environmental

PHASE 2 EROSION CONTROL

AV DEVELOPMENT, LLC
CLOVER RIDGE APARTMENTS

CHASKA, MINNESOTA

SHEET
C5.02
7 OF 10
REV.

© 2021 Sambatek

C:\PROJECTS\50521\CAD\CIVIL\SHEETS\50521-C5-EROSION.DWG | ALEA STUTZ | 5/3/2022 9:19:48 AM | 2.05 (LMS TECH)

EROSION & SEDIMENTATION CONTROL NOTES & DETAILS / "SITE MAP"

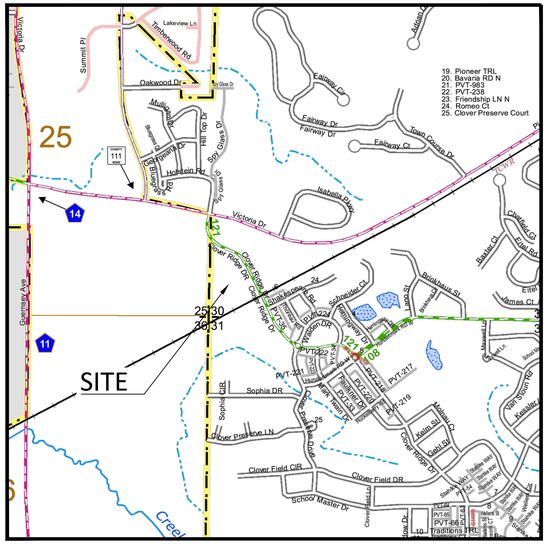

SITE LOCATION MAP
NOT TO SCALE

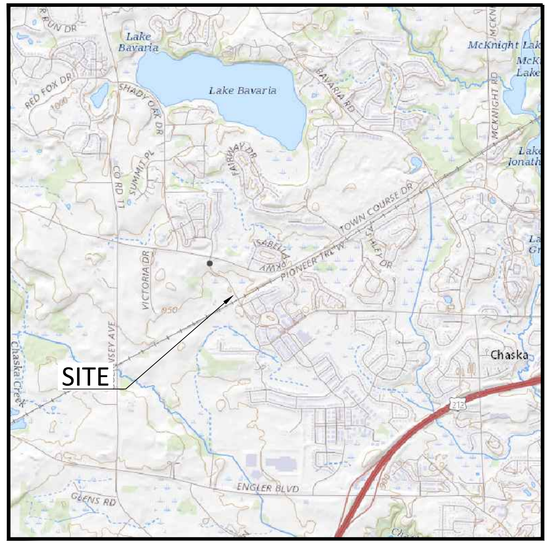

USGS MAP
NOT TO SCALE

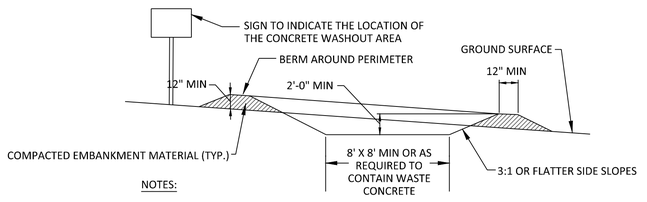

NOTES:

1. CONCRETE WASHOUT AREA SHALL BE INSTALLED PRIOR TO ANY CONCRETE PLACEMENT ON SITE.
2. CONCRETE WASHOUT AREA SHALL BE LINED WITH MINIMUM 10 MIL THICK PLASTIC LINER.
3. VEHICLE TRACKING CONTROL IS REQUIRED IF ACCESS TO CONCRETE WASHOUT AREA IS OFF PAVEMENT.
4. SIGNS SHALL BE PLACED AT THE CONSTRUCTION ENTRANCE, AT THE WASHOUT AREA, AND ELSEWHERE AS NECESSARY TO CLEARLY INDICATE THE LOCATION OF THE CONCRETE WASHOUT AREA TO OPERATORS OF CONCRETE TRUCKS AND PUMP RIGS.
5. THE CONCRETE WASHOUT AREA SHALL BE REPAIRED AND ENLARGED OR CLEANED OUT AS NECESSARY TO MAINTAIN CAPACITY FOR WASTED CONCRETE.
6. AT THE END OF CONSTRUCTION, ALL CONCRETE SHALL BE REMOVED FROM THE SITE AND DISPOSED OF AT AN ACCEPTED WASTE SITE.
7. WHEN THE CONCRETE WASHOUT AREA IS REMOVED, THE DISTURBED AREA SHALL BE SEEDED AND MULCHED OR OTHERWISE STABILIZED IN A MANNER ACCEPTED BY THE CITY.

CONCRETE WASHOUT AREA
NOT TO SCALE

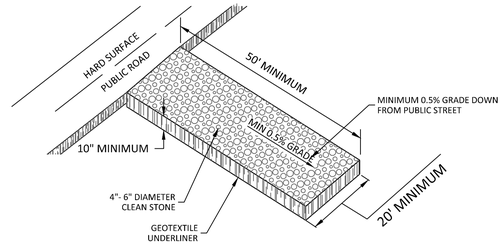

TEMPORARY STONE CONSTRUCTION EXIT
N.T.S.

AREA SUMMARY

PAVEMENT AREA	0.9 AC±
BUILDING AREA	0.80 AC±
SEEDED AREA	2.17 AC±
TOTAL DISTURBED	3.87 AC±
PRE - CONSTRUCTION IMPERVIOUS	0.08 AC±
POST - CONSTRUCTION IMPERVIOUS	1.68 AC±

DEVELOPER/OWNER:
XXXXXXX
XXXXXXX
XXXXXXXX
XXX-XXX-XXXX

SITE OPERATOR / GENERAL CONTRACTOR

SUPERINTENDENT:

SEQUENCE OF CONSTRUCTION

PHASE I:

1. INSTALL STABILIZED CONSTRUCTION ENTRANCES.
2. PREPARE TEMPORARY PARKING AND STORAGE AREA.
3. CONSTRUCT THE SILT FENCES ON THE SITE.
4. INSTALL INLET PROTECTION DEVICES ON EXISTING STORM STRUCTURES, AS SHOWN ON THE PLAN.
5. CONSTRUCT THE SEDIMENTATION AND SEDIMENT TRAP BASINS, AS REQUIRED.
6. HALT ALL ACTIVITIES AND CONTACT THE CIVIL ENGINEERING CONSULTANT TO PERFORM INSPECTION OF BMPs. GENERAL CONTRACTOR SHALL SCHEDULE AND CONDUCT STORM WATER PRE-CONSTRUCTION MEETING WITH ENGINEER AND ALL GROUND DISTURBING CONTRACTORS BEFORE PROCEEDING WITH CONSTRUCTION.
7. CLEAR AND GRUB THE SITE.
8. BEGIN GRADING THE SITE.
9. START CONSTRUCTION OF BUILDING PAD AND STRUCTURES.

PHASE II:

1. TEMPORARY SEED DENUDED AREAS.
2. INSTALL UTILITIES, UNDERDRAINS, STORM SEWERS, CURBS AND GUTTERS.
3. INSTALL RIP RAP AROUND OUTLET STRUCTURES.
4. INSTALL INLET PROTECTION AROUND ALL STORM SEWER STRUCTURES.
5. PREPARE SITE FOR PAVING.
6. PAVE SITE.
7. INSTALL INLET PROTECTION DEVICES.
8. COMPLETE GRADING AND INSTALL PERMANENT SEEDING AND PLANTING.
9. REMOVE ALL TEMPORARY EROSION AND SEDIMENT CONTROL DEVICES (ONLY IF SITE IS STABILIZED), IF REQUIRED BY THE CONTRACT.

GENERAL EROSION NOTES:

1. CONSTRUCTION SHALL COMPLY WITH ALL APPLICABLE GOVERNING CODES AND BE CONSTRUCTED TO SAME. WHERE A CONFLICT EXISTS BETWEEN LOCAL JURISDICTIONAL STANDARD SPECIFICATIONS AND SAMBATEK STANDARD SPECIFICATIONS, THE MORE STRINGENT SPECIFICATION SHALL APPLY.
2. THE STORMWATER POLLUTION PREVENTION PLAN (SWPPP) IS COMPRISED OF THIS DRAWING (EROSION & SEDIMENTATION CONTROL PLAN-ESC PLAN), THE STANDARD DETAILS, THE PLAN NARRATIVE, AND ITS APPENDICES, PLUS THE PERMIT AND ALL SUBSEQUENT REPORTS AND RELATED DOCUMENTS.
3. CONTRACTOR SHALL BE RESPONSIBLE FOR COMPLETING & SUBMITTING THE APPLICATION FOR THE MPCA GENERAL STORMWATER PERMIT FOR CONSTRUCTION ACTIVITY. ALL CONTRACTORS AND SUBCONTRACTORS INVOLVED WITH STORM WATER POLLUTION PREVENTION SHALL OBTAIN A COPY OF THE SWPPP AND THE STATE OF MINNESOTA NATIONAL POLLUTANT DISCHARGE ELIMINATION SYSTEM GENERAL PERMIT (NPDES PERMIT, ISSUED AUGUST 1, 2018) AND BECOME FAMILIAR WITH THE CONTENTS. THE SWPPP AND ALL OTHER RELATED DOCUMENTS MUST BE KEPT AT THE SITE DURING CONSTRUCTION.
4. CONTRACTOR SHALL IMPLEMENT BEST MANAGEMENT PRACTICES (BMP'S) AS REQUIRED BY THE SWPPP & PERMITS. CONTRACTOR SHALL OVERSEE THE INSPECTION & MAINTENANCE OF THE BMP'S AND EROSION PREVENTION FROM BEGINNING OF CONSTRUCTION AND UNTIL CONSTRUCTION IS COMPLETED, IS APPROVED BY ALL AUTHORITIES, AND THE NOTICE OF TERMINATION (NOT) HAS BEEN FILED WITH THE MPCA BY EITHER THE OWNER OR OPERATOR AS APPROVED ON PERMIT. ADDITIONAL BMP'S SHALL BE IMPLEMENTED AS DICTATED BY CONDITIONS AT NO ADDITIONAL COST TO OWNER THROUGHOUT ALL PHASES OF CONSTRUCTION.
5. CONTRACTOR SHALL COMPLY WITH TRAINING REQUIREMENTS IN PART 21.1-21.3 OF THE GENERAL PERMIT.
6. BMP'S AND CONTROLS SHALL CONFORM TO FEDERAL, STATE, OR LOCAL REQUIREMENTS OR MANUAL OF PRACTICE, AS APPLICABLE. CONTRACTOR SHALL IMPLEMENT ADDITIONAL CONTROLS AS DIRECTED BY PERMITTING AGENCY OR OWNER.
7. ESC PLAN MUST CLEARLY DELINEATE ALL STATE WATERS. PERMITS FOR ANY CONSTRUCTION ACTIVITY IMPACTING STATE WATERS OR REGULATED WETLANDS MUST BE MAINTAINED ON SITE AT ALL TIMES.
8. CONTRACTOR SHALL MINIMIZE CLEARING TO THE MAXIMUM EXTENT PRACTICAL OR AS REQUIRED BY THE GENERAL PERMIT. THE BOUNDARIES OF THE CLEARING LIMITS SHOWN ON THE ESC PLANS SHALL BE CLEARLY DELINEATED (E.G. WITH FLAGS, STAKES, SIGNS, SILT FENCE, ETC.) ON THE DEVELOPMENT SITE BEFORE WORK BEGINS. GROUND DISTURBING ACTIVITIES MUST NOT OCCUR OUTSIDE THE LIMITS OF DISTURBANCE.
9. GENERAL CONTRACTOR SHALL DENOTE ON PLAN THE TEMPORARY PARKING AND STORAGE AREA WHICH SHALL ALSO BE USED AS THE EQUIPMENT MAINTENANCE AND CLEANING AREA, EMPLOYEE PARKING AREA, AND AREA FOR LOCATING PORTABLE FACILITIES, OFFICE TRAILERS, AND TOILET FACILITIES.
10. ALL WASH WATER (CONCRETE TRUCKS, VEHICLE CLEANING, EQUIPMENT CLEANING, ETC.) MUST BE LIMITED TO A DEFINED AREA OF THE SITE AND SHALL BE CONTAINED AND PROPERLY TREATED OR DISPOSED. NO ENGINE DEGREASING IS ALLOWED ON SITE.
11. ALL LIQUID AND SOLID WASTES GENERATED BY CONCRETE WASHOUT OPERATIONS MUST BE CONTAINED IN A LEAK-PROOF CONTAINMENT FACILITY OR IMPERMEABLE LINER. A COMPACTED CLAY LINER IS NOT ACCEPTABLE. THE LIQUID AND SOLID WASTES MUST NOT CONTACT THE GROUND, AND THERE MUST NOT BE RUNOFF FROM THE CONCRETE WASHOUT OPERATIONS OR AREAS. LIQUID AND SOLID WASTES MUST BE DISPOSED OF PROPERLY AND IN COMPLIANCE WITH MPCA REGULATIONS. A SIGN MUST BE INSTALLED ADJACENT TO EACH WASHOUT FACILITY TO INFORM CONCRETE EQUIPMENT OPERATORS TO UTILIZE THE PROPER FACILITIES. SELF-CONTAINED CONCRETE WASHOUTS ON CONCRETE DELIVERY TRUCKS ARE ALLOWED.
12. SUFFICIENT OIL AND GREASE ABSORBING MATERIALS AND FLOTATION BOOMS SHALL BE MAINTAINED ON SITE OR READILY AVAILABLE TO CONTAIN AND CLEAN-UP FUEL OR CHEMICAL SPILLS AND LEAKS.
13. DUST ON THE SITE SHALL BE CONTROLLED. THE USE OF MOTOR OILS AND OTHER PETROLEUM BASED OR TOXIC LIQUIDS FOR DUST SUPPRESSION OPERATIONS IS PROHIBITED.
14. SOLID WASTE: COLLECTED SEDIMENT, ASPHALT & CONCRETE MILLINGS, FLOATING DEBRIS, PAPER, PLASTIC, FABRIC, CONSTRUCTION & DEMOLITION DEBRIS & OTHER WASTES MUST BE DISPOSED OF PROPERLY & MUST COMPLY WITH MPCA DISPOSAL REQUIREMENTS.
15. HAZARDOUS MATERIALS: OIL, GASOLINE, PAINT & ANY HAZARDOUS SUBSTANCES MUST BE PROPERLY STORED, INCLUDING SECONDARY CONTAINMENT, TO PREVENT SPILLS, LEAKS OR OTHER DISCHARGE. RESTRICTED ACCESS TO STORAGE AREAS MUST BE PROVIDED TO PREVENT VANDALISM. STORAGE & DISPOSAL OF HAZARDOUS WASTE MUST BE IN COMPLIANCE WITH MPCA REGULATIONS.
16. ALL STORM WATER POLLUTION PREVENTION MEASURES PRESENTED ON THIS PLAN, AND IN THE SWPPP, SHALL BE INITIATED AS SOON AS PRACTICABLE AND PRIOR TO SOIL DISTURBING ACTIVITIES UPSLOPE.
17. DISTURBED PORTIONS OF THE SITE WHERE CONSTRUCTION ACTIVITY HAS STOPPED SHALL BE TEMPORARILY SEEDED, WITHIN 14 DAYS OF INACTIVITY. SEEDING SHALL BE IN ACCORDANCE WITH MN/DOT SEED MIXTURE NUMBER 21-111 OR 21-112 DEPENDING ON THE SEASON OF PLANTING (SEE MN/DOT SPECIFICATION SECTION 2575.3) SEEDING METHOD AND APPLICATION RATE SHALL CONFORM TO MN/DOT SPECIFICATION SECTION 2575.3. TEMPORARY MULCH SHALL BE APPLIED IN ACCORDANCE WITH MN/DOT SPECIFICATION SECTION 2575.3F1 AND 2575.3G. ALTERNATIVELY, HYDRAULIC SOIL STABILIZER IN ACCORDANCE WITH MN/DOT SPECIFICATION SECTION 2575.3H MAY BE USED IN PLACE OF TEMPORARY MULCH.
18. DISTURBED PORTIONS OF THE SITE WHERE CONSTRUCTION ACTIVITY HAS PERMANENTLY STOPPED SHALL BE PERMANENTLY STABILIZED. THESE AREAS SHALL BE STABILIZED IN ACCORDANCE WITH THE TIME TABLE DESCRIBED ABOVE. REFER TO THE GRADING PLAN AND/OR LANDSCAPE PLAN FOR VEGETATIVE COVER.
19. CONTRACTORS OR SUBCONTRACTORS WILL BE RESPONSIBLE FOR REMOVING SEDIMENT FROM CONVEYANCES & FROM TEMPORARY SEDIMENTATION BASINS THAT ARE TO BE USED AS PERMANENT WATER QUALITY MANAGEMENT BASINS. SEDIMENT MUST BE STABILIZED TO PREVENT IT FROM BEING WASHED BACK INTO THE BASIN, CONVEYANCES, OR DRAINAGEWAYS DISCHARGING OFF-SITE OR TO SURFACE WATERS. THE CLEANOUT OF PERMANENT BASINS MUST BE SUFFICIENT TO RETURN THE BASIN TO DESIGN CAPACITY.
20. ON-SITE & OFF-SITE SOIL STOCKPILE AND BORROW AREAS SHALL BE PROTECTED FROM EROSION AND SEDIMENTATION THROUGH IMPLEMENTATION OF BMP'S. STOCKPILE AND BORROW AREA LOCATIONS SHALL BE NOTED ON THE SITE MAP AND PERMITTED IN ACCORDANCE WITH GENERAL PERMIT REQUIREMENTS.
21. TEMPORARY SOIL STOCKPILES MUST HAVE SILT FENCE OR OTHER EFFECTIVE SEDIMENT CONTROLS & CANNOT BE PLACED IN SURFACE WATERS, INCLUDING STORMWATER CONVEYANCES SUCH AS CURB & GUTTER SYSTEMS OR CONDUITS & DITCHES.
22. SLOPES SHALL BE LEFT IN A ROUGHENED CONDITION DURING THE GRADING PHASE TO REDUCE RUNOFF VELOCITIES AND EROSION.
23. DUE TO THE GRADE CHANGES DURING THE DEVELOPMENT OF THE PROJECT, CONTRACTOR SHALL BE RESPONSIBLE FOR ADJUSTING THE EROSION CONTROL MEASURES (SILT FENCES, CHECK DAMS, INLET PROTECTION DEVICES, ETC.) TO PREVENT EROSION.
24. ALL CONSTRUCTION SHALL BE STABILIZED AT THE END OF EACH WORKING DAY, THIS INCLUDES BACKFILLING OF TRENCHES FOR UTILITY CONSTRUCTION AND PLACEMENT OF GRAVEL OR BITUMINOUS PAVING FOR ROAD CONSTRUCTION.

MAINTENANCE NOTES:

ALL MEASURES STATED ON THIS EROSION AND SEDIMENT CONTROL PLAN, AND IN THE STORM WATER POLLUTION PREVENTION PLAN SHALL BE MAINTAINED IN FULLY FUNCTIONAL CONDITION UNTIL NO LONGER REQUIRED FOR A COMPLETED PHASE OF WORK OR FINAL STABILIZATION OF THE SITE. THE DESIGNATED CONTACT PERSON NOTED ON THIS PLAN MUST ROUTINELY INSPECT THE CONSTRUCTION ON SITE ONCE EVERY SEVEN DAYS DURING ACTIVE CONSTRUCTION AND WITHIN 24 HOURS AFTER A RAINFALL EVENT GREATER THAN 0.5 INCHES IN 24 HOURS. ALL EROSION AND SEDIMENTATION CONTROL MEASURES SHALL BE CLEANED AND REPAIRED IN ACCORDANCE WITH THE FOLLOWING:

1. ALL SILT FENCES MUST BE REPAIRED, REPLACED, OR SUPPLEMENTED WHEN THEY BECOME NONFUNCTIONAL OR THE SEDIMENT REACHES 1/2 OF THE HEIGHT OF THE FENCE. THESE REPAIRS MUST BE MADE WITHIN 24 HOURS OF DISCOVERY, OR AS SOON AS FIELD CONDITIONS ALLOW ACCESS.
2. TEMPORARY AND PERMANENT SEDIMENTATION BASINS MUST BE DRAINED AND THE SEDIMENT REMOVED WHEN THE DEPTH OF SEDIMENT COLLECTED IN THE BASIN REACHES 1/2 THE STORAGE VOLUME. DRAINAGE AND REMOVAL MUST BE COMPLETED WITHIN 72 HOURS OF DISCOVERY, OR AS SOON AS FIELD CONDITIONS ALLOW ACCESS (SEE PART 10.1-10.5 OF THE GENERAL PERMIT).
3. SURFACE WATERS, INCLUDING DRAINAGE DITCHES AND CONVEYANCE SYSTEMS, MUST BE INSPECTED FOR EVIDENCE OF SEDIMENT BEING DEPOSITED BY EROSION. CONTRACTOR MUST REMOVE ALL DELTAS AND SEDIMENT DEPOSITED IN SURFACE WATERS, INCLUDING DRAINAGE WAYS, CATCH BASINS, AND OTHER DRAINAGE SYSTEMS, AND RESTABILIZE THE AREAS WHERE SEDIMENT REMOVAL RESULTS IN EXPOSED SOIL. THE REMOVAL AND STABILIZATION MUST TAKE PLACE WITHIN SEVEN (7) DAYS OF DISCOVERY UNLESS PRECLUDED BY LEGAL, REGULATORY, OR PHYSICAL ACCESS CONSTRAINTS. CONTRACTOR SHALL USE ALL REASONABLE EFFORTS TO OBTAIN ACCESS. IF PRECLUDED, REMOVAL AND STABILIZATION MUST TAKE PLACE WITHIN SEVEN (7) CALENDAR DAYS OF OBTAINING ACCESS. CONTRACTOR IS RESPONSIBLE FOR CONTACTING ALL LOCAL, REGIONAL, STATE AND FEDERAL AUTHORITIES AND RECEIVING ANY APPLICABLE PERMITS, PRIOR TO CONDUCTING ANY WORK.
4. CONSTRUCTION SITE VEHICLE EXIT LOCATIONS MUST BE INSPECTED FOR EVIDENCE OF OFF-SITE SEDIMENT TRACKING ONTO PAVED SURFACES. TRACKED SEDIMENT MUST BE REMOVED FROM ALL OFF-SITE PAVED SURFACES, WITHIN 24 HOURS OF DISCOVERY, OR IF APPLICABLE, WITHIN A SHORTER TIME TO COMPLY WITH PART 9.11-9.12 OF THE GENERAL PERMIT.
5. CONTRACTOR IS RESPONSIBLE FOR THE OPERATION AND MAINTENANCE OF TEMPORARY AND PERMANENT WATER QUALITY MANAGEMENT BMPS, AS WELL AS ALL EROSION PREVENTION AND SEDIMENT CONTROL BMPS, FOR THE DURATION OF THE CONSTRUCTION WORK AT THE SITE. THE PERMITTEE(S) ARE RESPONSIBLE UNTIL ANOTHER PERMITTEE HAS ASSUMED CONTROL (ACCORDING TO PART 3.1 TO 3.8 OF THE MPCA GENERAL PERMIT) OVER ALL AREAS OF THE SITE THAT HAVE NOT BEEN FINALLY STABILIZED OR THE SITE HAS UNDERGONE FINAL STABILIZATION, AND A (N.O.T.) HAS BEEN SUBMITTED TO THE MPCA.
6. IF SEDIMENT ESCAPES THE CONSTRUCTION SITE, OFF-SITE ACCUMULATIONS OF SEDIMENT MUST BE REMOVED IN A MANNER AND AT A FREQUENCY SUFFICIENT TO MINIMIZE OFF-SITE IMPACTS (E.G., FUGITIVE SEDIMENT IN STREETS COULD BE WASHED INTO STORM SEWERS BY THE NEXT RAIN AND/OR POSE A SAFETY HAZARD TO USERS OF PUBLIC STREETS).

NO	DATE	BY	CKD	APPR	COMMENT
	05/03/2022				Final Site and Building Plan Application

I hereby certify that this plan, specification, or report was prepared by me or under my direct supervision and that I am a duly Licensed Professional Engineer under the laws of the State of Minnesota.

Print Name: Brian W. Frank

Date _____ License # _____

PRELIMINARY | DESIGN REVIEW | PERMIT SUBMITTAL | CONSTRUCTION DOCUMENTS

DRAWN BY KLS | DESIGNED BY | CHECKED BY | PROJECT NO. 50521

Sambatek
www.sambatek.com
Engineering | Surveying | Planning | Environmental

EROSION NOTES

AV DEVELOPMENT, LLC
CLOVER RIDGE APARTMENTS

CHASKA, MINNESOTA

SHEET
C5.03
8 OF 10
REV.

© 2021 Sambatek

C:\PROJECTS\50521\CAD\CIVIL\SHEETS\50521-C5-EROSION.DWG;C5.03 - EROSION NOTES | 5/3/2022 9:19:48 AM | ALEA STUTZ | 20S (LMS TECH)

SECTION 1: SITE EVALUATION, ASSESSMENT, AND PLANNING

1.1 PROJECT/SITE INFORMATION

CHASKA MULTIFAMILY
CLOVER RIDGE DRIVE & TWIN CITIES RAILWAY
CITY: CHASKA
STATE: MN
ZIP CODE:55318
COUNTY: CARVER

NPDES PERMIT NUMBER:_____

1.2 CONTACT INFORMATION/RESPONSIBLE PARTIES

COMPANY/ORGANIZATION NAME:AV DEVELOPMENT LLC
CONTACT NAME:VISHAL DUTT
ADDRESS:11800 SINGLETREE LANE
CITY, STATE, ZIP CODE: EDEN PRAIRIE MN, 55344
TELEPHONE NUMBER:
FAX/EMAIL: VISHAL@VENTUREMORTGAGE.COM

GENERAL CONTRACTOR (TO BE COMPLETED BY GENERAL CONTRACTOR):

COMPANY/ORGANIZATION NAME:
CONTACT NAME:
ADDRESS:
CITY, STATE, ZIP CODE:
TELEPHONE NUMBER:
FAX/EMAIL:
INSERT AREA OF CONTROL (IF MORE THAN ONE OPERATOR AT SITE):

THE GENERAL CONTRACTOR SHALL COMPLY WITH THE REQUIREMENTS OF THE MINNESOTA GENERAL PERMIT AUTHORIZATION TO DISCHARGE STORM WATER ASSOCIATED WITH CONSTRUCTION ACTIVITY UNDER THE NATIONAL POLLUTION DISCHARGE ELIMINATION SYSTEM/STATE DISPOSAL SYSTEM PERMIT PROGRAM (GENERAL PERMIT). THE GENERAL CONTRACTOR MUST COMPLY WITH ANY LOCAL GOVERNING AGENCY (LGU) HAVING JURISDICTION CONCERNING EROSION AND SEDIMENT CONTROL. THE GENERAL CONTRACTOR SHALL BE REQUIRED TO BE A CO-APPLICANT WITH THE OWNER. THE GENERAL CONTRACTOR SHALL BE RESPONSIBLE FOR MAINTENANCE OF THE EROSION AND SEDIMENT CONTROL DEVICES.

THE "APPLICATION FOR GENERAL STORM-WATER PERMIT FOR CONSTRUCTION ACTIVITY (MN R100001)" SHALL BE COMPLETED BY THE GENERAL CONTRACTOR AND SUBMITTED ONLINE, ALONG WITH THE REQUIRED APPLICATION FEE, THROUGH THE MPCA'S WEBSITE.

UNLESS NOTIFIED BY THE MINNESOTA POLLUTION CONTROL AGENCY (MPCA) TO THE CONTRARY, APPLICANTS WHO SUBMIT A COMPLETE APPLICATION FORM IN ACCORDANCE WITH THE REQUIREMENTS OF THE GENERAL PERMIT ARE AUTHORIZED TO DISCHARGE STORM WATER FROM THE CONSTRUCTION SITE UNDER THE TERMS AND CONDITIONS OF THIS PERMIT SEVEN (7) CALENDAR DAYS THE ONLINE APPLICATION PROCESS IS COMPLETE(HTTPS://NETWEB.PCA.STATE.MN.US/PRIVATE/).

(NOTE: ALL PROJECTS UNDER 50 ACRES MUST SUBMIT THE PERMIT APPLICATION USING THE ONLINE PROCESS. MAILED APPLICATIONS ARE ONLY ACCEPTED FOR PROJECTS THAT DISTURB 50 OR MORE ACRES, AND HAVE A DISCHARGE POINT WITHIN 1 MILE OF A PROTECTED WATER.)

ADDITIONALLY, AUTHORIZATION WILL BE DELAYED UNDER THE FOLLOWING CIRCUMSTANCES:

- IF THE PROJECT DISTURBS 50 ACRES OR MORE AND HAS A DISCHARGE POINT WITHIN 1 MILE AND FLOWS TO AN IMPAIRED OR SPECIAL WATER WHOSE DISCHARGE MAY REACH AN IMPAIRED OR SPECIAL WATER LISTED IN SECTION 23 OF THE GENERAL PERMIT THE APPLICANT SHALL SUBMIT THE STORM WATER POLLUTION PREVENTION PLAN AND A COMPLETED APPLICATION AT LEAST 30 CALENDAR DAYS PRIOR TO THE COMMENCEMENT OF CONSTRUCTION ACTIVITIES. UNLESS NOTIFIED BY THE MPCA TO THE CONTRARY, COVERAGE BECOMES EFFECTIVE 30 CALENDAR DAYS AFTER THE POSTMARKED DATE OF THE COMPLETED APPLICATION.
- IF THE PROJECT INCLUDES ALTERNATIVE METHODS THE APPLICATION AND TWO ALTERNATIVE TREATMENT PLANS MUST BE SUBMITTED A MINIMUM OF 90 DAY BEFORE CONSTRUCTION STARTS.

EROSION & SEDIMENT CONTROL SUBCONTRACTOR (RESPONSIBLE FOR IMPLEMENTING & UPDATING SWPPP - TO BE COMPLETED BY CONTRACTOR):

COMPANY/ORGANIZATION NAME:
CONTACT NAME:
ADDRESS:
CITY, STATE, ZIP CODE:
TELEPHONE NUMBER:
FAX/EMAIL:

EROSION & SEDIMENT CONTROL INSPECTOR (SEE PART 6.1 OF THIS SWPPP FOR MORE INFORMATION ON INSPECTION RESPONSIBILITIES- TO BE COMPLETED BY CONTRACTOR):

COMPANY/ORGANIZATION NAME:
CONTACT NAME:
ADDRESS:
CITY, STATE, ZIP CODE:
TELEPHONE NUMBER:
FAX/EMAIL:

GROUND DISTURBING SUBCONTRACTOR(S):

COMPANY/ORGANIZATION NAME:
CONTACT NAME:
ADDRESS:
CITY, STATE, ZIP CODE:
TELEPHONE NUMBER:
FAX/EMAIL:

THE GENERAL CONTRACTOR SHALL PROVIDE A CHAIN OF RESPONSIBILITY WITH ALL OPERATORS ON THE SITE TO ENSURE THAT THE SWPPP WILL BE IMPLEMENTED AND STAY IN EFFECT UNTIL THE CONSTRUCTION PROJECT IS COMPLETE AND THE NOT SUBMITTED.

THIS SWPPP WAS PREPARED BY:

COMPANY/ORGANIZATION NAME: SAMBATEK
CONTACT NAME: ALESSANDRA STUTZ
ADDRESS: 12800 WHITEWATER DRIVE, SUITE 300
CITY, STATE, ZIP CODE:MINNETONKA M 55343
TELEPHONE NUMBER:763-520-8460
FAX/EMAIL: ASTUTZ@SAMBATEK.COM

1.3 NATURE OF CONSTRUCTION ACTIVITY

NATURE OF CONSTRUCTION:

THIS SWPPP HAS BEEN PREPARED FOR MAJOR ACTIVITIES ASSOCIATED WITH CONSTRUCTION OF ONE MULTIFAMILY APARTMENT COMPLEX WITH ASSOCIATED HARDSCAPING, LANDSCAPING, AND ONE UNDERGROUND RATE CONTROL SYSTEM.

ANTICIPATED APPROXIMATE TIMELINES:

ESTIMATED PROJECT START DATE: 06/30/22
ESTIMATED PROJECT COMPLETION DATE: 10/30/23

1.4 SOILS, SLOPES, VEGETATION, AND CURRENT DRAINAGE PATTERNS

SOIL TYPE(S):

ACCORDING TO BORING LOGS PERFORMED BY BRAUN INTERTEC ON JANUARY 24, 2022, SOILS ONSITE CONSIST PRIMARILY OF LEAN CLAYS. THESE SOILS ARE HYDROLOGIC SOIL GROUP (HSG) C/D WHICH ARE UNSUITABLE FOR INFILTRATION. GROUNDWATER WAS OBSERVED AT ELEVATIONS BETWEEN 922.5-929.5.

SLOPES:

EXISTING PERVIOUS SLOES RANGE FROM 2 TO 50%. PROPOSED PERVIOUS SLOPES RANGE FROM 5-33%. PROPOSED IMPERVIOUS SLOPES RANGE FROM 1-10%.

DRAINAGE PATTERNS:

IN EXISTING CONDITIONS, THE SITE IS PRIMARILY OPEN MEADOW AND WETLANDS. EXISTING IMPERVIOUS INCLUDES AN ACCESS AISLE FOR THE EXISTING STORMWATER POND WHICH SERVES AS TREATMENT FOR CLOVER RIDGE DRIVE. MUCH OF THE EXISTING SITE DRAINS OFFSITE TO EXISTING WETLANDS. A PORTION OF THE SITE DRAINS TO CLOVER RIDGE DRIVE AND THE REMAINDER OF THE SITE DRAINS TO THE EXISTING STORMWATER POND.

VEGETATION:

EXISTING VEGETATION WILL REQUIRE CLEARING AND GRUBBING DUE TO ALTERING GRADES.

RAINFALL INFORMATION:

RAINFALL INFORMATION - THE AVERAGE TOTAL ANNUAL PRECIPITATION IS ABOUT 28.32 INCHES. OF THIS ABOUT 17.31 INCHES, OR 61 PERCENT, USUALLY FALLS IN MAY THROUGH SEPTEMBER. THE AVERAGE ANNUAL SNOWFALL IS 57.3 INCHES.

1.5 CONSTRUCTION SITE ESTIMATES

PROJECT AREA SUMMARY:

TOTAL PROJECT AREA: 13 ACRES
CONSTRUCTION SITE AREA TO BE DISTURBED: 3.87 ACRES

IMPERVIOUS AREAS:

IMPERVIOUS AREA BEFORE CONSTRUCTION (ACRES): 0.08
IMPERVIOUS AREA AFTER CONSTRUCTION (ACRES): 1.68

1.6 RECEIVING WATERS

CONSTRUCTION PHASE STORM WATER SYSTEM DESCRIPTION:

RUNOFF FROM THE SITE WILL BE COLLECTED IN THE PROPOSED STORM SEWER SYSTEM, SENT TO AN UNDERGROUND RATE CONTROL FACILITY, AND DISCHARGED THROUGH A PROPRIETARY TREATMENT DEVICE BEFORE DISCHARGING TO THE EXISTING WETLANDS.

DESCRIPTION OF RECEIVING WATERS:

RUNOFF FROM THE SITE DISCHARGES TO TWO EXISTING WETLANDS LOCATED ON SITE. THESE WETLANDS ARE CLASSIFIED AS MANAGE 3 AND UNIQUE. THESE WETLANDS ULTIMATELY DISCHARGE TO CHASKA CREEK. THE SITE IS LOCATED WITHIN 1 MILE OF BAVARIA LAKE WHICH HAS EPA APPROVED IMPAIRMENT FOR FISHES BIOASSESSMENTS; MERCURY IN FISH TISSUE.

1.7 SITE FEATURES AND SENSITIVE AREAS TO BE PROTECTED

PROTECT THE EXISTING WETLANDS LOCATED WEST OF THE PROPOSED DEVELOPED AREA.

1.8 POTENTIAL SOURCES OF POLLUTION

POTENTIAL SOURCES OF SEDIMENT AND OTHER POLLUTANTS TO STORMWATER RUNOFF:

CONSTRUCTION PHASE POLLUTANT SOURCES ANTICIPATED AT THE SITE ARE DISTURBED (BARE) SOIL, VEHICLE FUELS AND LUBRICANTS, CHEMICALS ASSOCIATED WITH BUILDING CONSTRUCTION, AND BUILDING MATERIALS. WITHOUT ADEQUATE CONTROL THERE IS THE POTENTIAL FOR EACH TYPE OF POLLUTANT TO BE TRANSPORTED BY STORM WATER.

1.9 ENDANGERED/THREATENED SPECIES

NO KNOWN THREATENED OR ENDANGERED SPECIES ARE PRESENT ON SITE.

1.10 HISTORIC PRESERVATION

THERE ARE NO KNOWN HISTORIC SITES ON OR NEAR THE CONSTRUCTION SITE.

1.11 APPLICABLE FEDERAL, TRIBAL, STATE OR LOCAL PROGRAMS

LOCAL GOVERNING UNIT (LGU) REQUIREMENTS:

THE PROJECT IS LOCATED WITHIN THE CARVER COUNTY WATER MANAGEMENT ORGANIZATION (CCWMO) AND THE CITY OF CHASKA. ONSITE STORMWATER MANAGEMENT FACILITIES HAVE BEEN DESIGNED TO MEET THE REQUIREMENTS OF THE CITY OF CHASKA, CCWMO, AND MPCA THROUGH THE CONSTRUCTION OF ONE UNDERGROUND DETENTION SYSTEM DISCHARGING TO A PROPRIETARY FILTRATION DEVICE. STORMWATER MANAGEMENT REQUIREMENTS FOR THIS PROJECT ARE:

O RATE CONTROL: PEAK STORMWATER RUNOFF RATE SHALL NOT INCREASE FROM THE EXISTING CONDITIONS FOR THE 2-, 10-, 100-YEAR RAINFALL EVENTS (CCWMO). THE NET 100-YEAR PEAK FLOW PER ACRE FROM NEW DEVELOPMENT MUST MEET THE CALCULATED CITY AVERAGE OF 0.2 CFS/ACRE (CITY OF CHASKA).

O VOLUME CONTROL: THE STORMWATER MANAGEMENT PLAN SHOULD PROVIDE VOLUME CONTROL FOR 1 INCH FROM THE IMPERVIOUS SURFACE (CCWMO).

O WATER QUALITY: THE STORMWATER MANAGEMENT PLAN MUST PROVIDE WATER QUALITY TREATMENT FOR 1 INCH OF RAINFALL FROM THE SITE'S NEW IMPERVIOUS SURFACE (CCWMO). NUTRIENT REMOVAL SHALL BE GREATER THAN OR EQUAL TO THE EQUIVALENT TREATMENT PROVIDED BY A NURP POND (CITY OF CHASKA).

1.12 MITIGATION MEASURES FROM ENVIRONMENTAL REVIEWS/TMDLS/IMPAIRED WATERS

1.13 MAPS

EROSION AND SEDIMENT CONTROL PLANS:

THE FOLLOWING SITE DEVELOPMENT PLAN SHEETS ARE AN INTEGRAL PART OF THIS SWPPP:

C-5.01 - PHASE I EROSION AND SEDIMENTATION CONTROL PLAN/"SITE MAP"
C-5.02 - PHASE II EROSION AND SEDIMENTATION CONTROL PLAN/"SITE MAP"
C-5.03 - EROSION AND SEDIMENTATION CONTROL DETAILS
C-5.03 - EROSION AND SEDIMENTATION CONTROL NOTES/"SITE MAP"

SECTION 2: EROSION AND SEDIMENT CONTROL BMPS

EROSION CONTROL BMPS:

THE PURPOSE OF EROSION CONTROL IS TO PREVENT SOIL PARTICLES FROM BECOMING SUSPENDED IN WATER AND BEING TRANSPORTED TO EITHER DOWNSTREAM SURFACE WATERS OR DOWNSTREAM PROPERTIES.

APPROPRIATE CONSTRUCTION PHASING, VEGETATIVE BUFFER STRIPS, HORIZONTAL SLOPE GRADING, AND OTHER CONSTRUCTION PRACTICES THAT MINIMIZE EROSION MUST BE PLANNED FOR AND IMPLEMENTED.

IN THE NATURAL CONDITION, SOIL IS STABILIZED BY NATIVE VEGETATION. THE PRIMARY TECHNIQUE TO BE USED AT THIS PROJECT FOR FINAL STABILIZATION OF SITE SOIL WILL BE TO PROVIDE A PROTECTIVE COVER OF VEGETATION, PAVEMENT, OR BUILDING.

ALL EXPOSED AREAS MUST BE STABILIZED AS SOON AS POSSIBLE (BUT NO LATER THAN THE NEXT WORK DAY) TO LIMIT SOIL EROSION, BUT IN NO CASE LATER THAN 7 DAYS AFTER THE CONSTRUCTION ACTIVITY IN THAT PORTION OF THE SITE HAS TEMPORARILY OR PERMANENTLY CEASED. TEMPORARY SOIL STOCKPILES WITHOUT SIGNIFICANT SILT, CLAY OR ORGANIC COMPONENTS (E.G. CLEAN AGGREGATED STOCKPILES, DEMOLITION CONCRETE STOCKPILES, SAND STOCKPILES) AND THE CONSTRUCTED BASE COMPONENTS OF ROADS, PARKING LOTS AND SIMILAR SURFACES ARE EXEMPT FROM THIS REQUIREMENT, BUT MUST COMPLY WITH SECTION 2.7 OF THIS SWPPP (SECTION 8.4, 9.9, 9.10, AND 23.9 OF THE GENERAL PERMIT).

SEDIMENT CONTROL BMPS:

THE PURPOSE OF SEDIMENT CONTROL IS TO PREVENT SOIL PARTICLES THAT HAVE BEEN SUSPENDED IN WATER FROM ENTERING SURFACE WATERS, INCLUDING CURB AND GUTTER SYSTEMS AND STORM SEWER INLETS. SEDIMENT CONTROL BMPS HAVE BEEN DESIGNED AS PART OF THIS SWPPP.

IF THE DOWN GRADIENT TREATMENT SYSTEM IS OVERLOADED, THE CONTRACTOR IS RESPONSIBLE FOR IMPLEMENTING ADDITIONAL UP GRADIENT SEDIMENT CONTROL PRACTICES OR REDUNDANT BMPS TO ELIMINATE THE OVERLOADING AND MUST AMEND THE SWPPP TO IDENTIFY THE ADDITIONAL PRACTICES.

SEDIMENT CONTROL PRACTICES MUST ALWAYS BE ESTABLISHED ON ALL DOWN GRADIENT PERIMETERS AND BE LOCATED UPGRADIENT OF ANY BUFFER ZONES. THE PERIMETER SEDIMENT CONTROL PRACTICES MUST BE IN PLACE BEFORE ANY UP GRADIENT LAND DISTURBING ACTIVITIES BEGIN. THESE PRACTICES MUST REMAIN IN PLACE UNTIL FINAL STABILIZATION IS ACHIEVED (SEE SECTION 8 OF THIS SWPPP).

THE TIMING OF THE INSTALLATION OF SEDIMENT CONTROL PRACTICES MAY BE ADJUSTED TO ACCOMMODATE SHORT-TERM ACTIVITIES SUCH AS CLEARING OR GRUBBING, OR PASSAGE OF VEHICLES. ANY SHORT TERM ACTIVITY MUST BE COMPLETED AS QUICKLY AS POSSIBLE AND THE SEDIMENT CONTROL PRACTICES MUST BE RE-INSTALLED IMMEDIATELY AFTER THE ACTIVITY IS COMPLETED. SEDIMENT CONTROL PRACTICES MUST BE INSTALLED BEFORE THE NEXT RAIN EVENT EVEN IF THE ACTIVITY IS NOT COMPLETE.

2.1 MINIMIZE DISTURBED AREA AND PROTECT NATURAL FEATURES AND SOIL

GROUND DISTURBANCE SHALL BE PHASED IN ACCORDANCE WITH THE SCHEDULE SHOWN ON C5.03. PROTECT EXISTING UNIQUE AND MANAGE 3 WETLANDS WITH REDUNDANT SILT FENCE.

2.2 PRESERVE 50 FOOT NATURAL BUFFER

THE CONTRACTOR MUST PRESERVE A 50 FOOT NATURAL BUFFER (OR IF A BUFFER IS INFEASIBLE ON THE SITE PROVIDE REDUNDANT SEDIMENT CONTROLS) WHEN A SURFACE WATER IS LOCATED WITHIN 50 FEET OF THE PROJECTS EARTH DISTURBANCES AND STORMWATER FLOWS TO THE SURFACE WATER. THE CONTRACTOR IS NOT REQUIRED TO ENHANCE THE QUALITY OF THE VEGETATION THAT ALREADY EXISTS IN THE BUFFER OR PROVIDE VEGETATION IF NONE EXISTS. (SHOW 50 FOOT BUFFERS ON PHASE I EROSION & SEDIMENT CONTROL PLAN)

2.3 CONTROL STORMWATER FLOWING ONTO AND THROUGH THE PROJECT

MEASURES SHOULD BE TAKEN TO ENSURE THAT "CLEAN" RUNOFF FROM OFF SITE IS DIVERTED AROUND DISTURBED AREAS ON SITE. CARE SHOULD BE TAKEN THAT RE-ROUTING OFF SITE RUNOFF DOES NOT RESULT IN FLOODING OR OTHER ISSUES ON ADJACENT PROPERTIES.

BMP DESCRIPTION: TEMPORARY DIVERSION DITCH

INSTALLATION SCHEDULE: INSTALL TEMPORARY DIVERSION DITCHES AS SHOWN ON THE SWPPP PLAN SHEETS, AND AS NEEDED THROUGHOUT CONSTRUCTION, PRIOR TO UP GRADIENT GROUND DISTURBING ACTIVITIES

MAINTENANCE AND INSPECTION REQUIREMENTS: THE WETTED PERIMETER OF ANY TEMPORARY OR PERMANENT DRAINAGE DITCH MUST BE STABILIZED WITHIN 200 LINEAL FEET FROM THE PROPERTY EDGE OR FROM THE POINT OF DISCHARGE INTO ANY SURFACE WATER. THIS STABILIZATION MUST BE COMPLETED WITHIN 24 HOURS OF CONNECTING TO A SURFACE WATER. THE REMAINDER OF THE DITCH MUST BE STABILIZED WITHIN 7 DAYS OF CONNECTING TO A SURFACE WATER AND AFTER CONSTRUCTION HAS CEASED.

TEMPORARY OR PERMANENT DITCHES THAT ARE BEING USED AS A SEDIMENT CONTAINMENT SYSTEM DO NOT NEED TO BE STABILIZED, BUT MUST BE STABILIZED WITHIN 24 HOURS AFTER NO LONGER BEING USED AS A SEDIMENT CONTAINMENT SYSTEM.

DITCHES MUST BE INSPECTED EVERY 7 DAYS, AND WITHIN 24 HOURS AFTER A 0.5" 24-HOUR RAIN EVENT. ANY SEDIMENT DEPOSITED IN DIVERSION DITCHES MUST BE REMOVED AND ANY EXPOSED SOILS STABILIZED WITHIN 7 DAYS OF DISCOVERY UNLESS PRECLUDED BY LEGAL, REGULATORY, OR PHYSICAL ACCESS CONSTRAINTS. IF PRECLUDED, NOTE REASON FOR DELAY ON MAINTENANCE LOG.

RESPONSIBLE STAFF (CONTRACTOR TO COMPLETE):

2.4 STABILIZE SOILS

1. **TEMPORARY SEEDING** - DISTURBED AREAS THAT ARE NOT YET AT FINAL GRADE BUT THAT WILL NOT BE ACTIVELY WORKED FOR 7 DAYS OR MORE MUST BE TEMPORARILY STABILIZED. TEMPORARY STABILIZATION MUST BE INITIATED IMMEDIATELY WHERE WORK HAS TEMPORARILY CEASED AND MUST BE COMPLETED NO LATER THAN 7 CALENDAR DAYS AFTER WORK IN THAT PORTION OF THE SITE HAS TEMPORARILY CEASED. TEMPORARY SEEDING SHALL BE IN ACCORDANCE WITH MN/DOT SEED MIXTURE NUMBER 21-111 OR 21-112 DEPENDING ON THE SEASON OF PLANTING (SEE MN/DOT SPECIFICATION SECTION 2575.3) SEEDING METHOD AND APPLICATION RATE SHALL CONFORM TO MN/DOT SPECIFICATION SECTION 2575.3. TEMPORARY MULCH SHALL BE APPLIED IN ACCORDANCE WITH MN/DOT SPECIFICATION SECTION 2575.3C. ALTERNATIVELY, HYDRAULIC SOIL STABILIZER IN ACCORDANCE WITH MN/DOT SPECIFICATION SECTION 2575.3E MAY BE USED IN PLACE OF TEMPORARY MULCH.

2. **PERMANENT STABILIZATION** - ALL AREAS AT FINAL GRADE MUST BE STABILIZED WITHIN 7 DAYS AFTER COMPLETION OF THE MAJOR CONSTRUCTION ACTIVITY. PERMANENT STABILIZATION MUST BE INITIATED IMMEDIATELY WERE WORK HAS PERMANENTLY CEASED AND MUST BE COMPLETED NO LATER THAN 7 CALENDAR DAYS AFTER CONSTRUCTION ACTIVITY IN THAT PORTION OF THE SITE HAS PERMANENTLY CEASED. SEEDED AREAS SHALL BE PROTECTED WITH MULCH. PERMANENT MULCH SHALL CONFORM TO MN/DOT SPECIFICATION 3882, TYPE 3 AT 2 TONS/ACRE AND SHALL BE DISK ANCHORED. HYDRAULIC SOIL STABILIZER MAY BE USED IN PLACE OF MULCH IF APPROVED BY CIVIL ENGINEER. IF HYDRAULIC SOIL STABILIZER IS USED, IT SHALL BE MN/DOT TYPE 6.

2.5 PROTECT SLOPES

STEEP SLOPE AREAS - THE CONTRACTOR MUST MINIMIZE THE NEED FOR DISTURBANCE OF PORTIONS OF THE PROJECT THAT HAVE STEEP SLOPES (3:1 OR STEEPER). FOR THOSE SLOPED AREAS WHICH MUST BE DISTURBED, THE CONTRACTOR MUST USE TECHNIQUES SUCH AS PHASING AND STABILIZATION PRACTICES DESIGNED FOR STEEP SLOPES, SUCH AS DRAINING AND TERRACING. SLOPES STEEPER THAN 3:1 MUST BE PROTECTED BY EROSION CONTROL BLANKETS.

BMP DESCRIPTION: EROSION CONTROL BLANKET

INSTALLATION SCHEDULE: INSTALL EROSION CONTROL BLANKETS AS SHOWN ON THE SWPPP PLAN SHEETS, AND AS NEEDED THROUGHOUT CONSTRUCTION, WITHIN THE TIMEFRAME ALLOWED FOR STABILIZATION AFTER WORK HAS CEASED IN AN AREA, DEPENDING ON THE LOCATION (I.E. 24 HOURS, 7 DAYS, 14 DAYS)

MAINTENANCE AND INSPECTION REQUIREMENTS: TO FUNCTION PROPERLY, EROSION CONTROL BLANKETS MUST BE IN CONTACT WITH THE SOIL BENEATH THE BLANKET. BLANKETS MUST BE SECURED PER THE CONSTRUCTION DETAIL PROVIDED WITH THE SWPPP PLAN SHEETS.

INSPECT BLANKETS EVERY 7 DAYS OR WITHIN 24 HOURS AFTER A 0.5" 24-HOUR RAIN EVENT. REPAIR, REPLACE, OR SUPPLEMENT NON-FUNCTIONAL BLANKETS WITHIN 3 DAYS OR BY THE NEXT RAIN EVENT, WHICHEVER COMES FIRST.

RESPONSIBLE STAFF (CONTRACTOR TO COMPLETE):

2.6 PROTECT STORM DRAIN INLETS

ALL STORM DRAIN INLETS MUST BE PROTECTED BY APPROPRIATE MEANS DURING CONSTRUCTION UNTIL ALL SOURCES WITH POTENTIAL FOR DISCHARGING TO THE INLET HAVE BEEN STABILIZED. INLET PROTECTION MAY BE REMOVED FOR A PARTICULAR INLET IF A SPECIFIC SAFETY CONCERN (STREET FLOODING/FREEZING) HAS BEEN IDENTIFIED AND PERMITTEE(S) HAVE RECEIVED WRITTEN CORRESPONDENCE FROM THE JURISDICTIONAL AUTHORITY (E.G. CITY/COUNTY/TOWNSHIP/MNDOT/ETC.) VERIFYING THE NEED FOR REMOVAL. THE WRITTEN CORRESPONDENCE MUST BE DOCUMENTED IN THIS SWPPP.

BMP DESCRIPTION: SILT FENCE INLET PROTECTION

INSTALLATION SCHEDULE: INSTALL INLET PROTECTION IN EXISTING STRUCTURES AS DIRECTED ON THE SWPPP PLAN SHEETS, AND AS NEEDED THROUGHOUT CONSTRUCTION, PRIOR TO BEGINNING GROUND DISTURBING ACTIVITIES UP GRADIENT OF THE INLET. INSTALL INLET PROTECTION ON NEW STRUCTURES AS SOON AS THE STRUCTURES ARE PUT INTO USE.

MAINTENANCE AND INSPECTION REQUIREMENTS: INSPECT SILT FENCE EVERY 7 DAYS OR WITHIN 24 HOURS AFTER A 0.5" 24-HOUR RAIN EVENT. SEDIMENT ACCUMULATIONS SHOULD BE REMOVED WHEN SEDIMENT BUILD-UP REACHES 1/2 THE HEIGHT OF THE SILT FENCE. THIS MAINTENANCE MUST BE COMPLETED WITHIN 24 HOURS OF DISCOVERY.

RESPONSIBLE STAFF (CONTRACTOR TO COMPLETE):

BMP DESCRIPTION: INLET PROTECTION (INLET INSERT DEVICE)

INSTALLATION SCHEDULE: INSTALL INLET PROTECTION IN EXISTING STRUCTURES AS DIRECTED ON THE SWPPP PLAN SHEETS, AND AS NEEDED THROUGHOUT CONSTRUCTION, PRIOR TO BEGINNING GROUND DISTURBING ACTIVITIES UP GRADIENT OF THE INLET. INSTALL INLET PROTECTION ON NEW STRUCTURES AS SOON AS THE STRUCTURES ARE PUT INTO USE.

MAINTENANCE AND INSPECTION REQUIREMENTS: INSPECT INLET PROTECTION EVERY 7 DAYS OR WITHIN 24 HOURS AFTER A 0.5" 24-HOUR RAIN EVENT. SEDIMENT ACCUMULATIONS SHOULD BE REMOVED WHEN SEDIMENT BUILD-UP REACHES 1/2 THE CAPACITY OF THE DEVICE, OR, IF MORE STRINGENT, IN ACCORDANCE WITH MANUFACTURER RECOMMENDATIONS. THIS MAINTENANCE MUST BE COMPLETED WITHIN 24 HOURS OF DISCOVERY.

RESPONSIBLE STAFF (CONTRACTOR TO COMPLETE):

2.7 ESTABLISH PERIMETER CONTROLS AND SEDIMENT BARRIERS

ALL STRUCTURAL SEDIMENT CONTROLS INTENDED TO RECEIVE AND TREAT CONSTRUCTION RUNOFF MUST BE IN PLACE BEFORE ANY UP GRADIENT LAND ALTERATION CAN BEGIN AND MUST STAY IN OPERATION UNTIL FINAL STABILIZATION OF THE SITE HAS BEEN ACHIEVED.

TEMPORARY SOIL STOCKPILES MUST HAVE SILT FENCE OR OTHER EFFECTIVE SEDIMENT CONTROLS, AND CANNOT BE PLACED IN ANY NATURAL BUFFERS OR SURFACE WATERS, INCLUDING STORMWATER CONVEYANCES SUCH AS CURB AND GUTTER SYSTEMS, OR CONDUITS AND DITCHES UNLESS THERE IS A BYPASS IN PLACE FOR THE STORMWATER.

BMP DESCRIPTION: SILT FENCE

INSTALLATION SCHEDULE: INSTALL SILT FENCE AS DIRECTED ON THE SWPPP PLAN SHEETS, AND AS NEEDED THROUGHOUT CONSTRUCTION, PRIOR TO COMMENCING UP GRADIENT LAND DISTURBING ACTIVITIES.

MAINTENANCE AND INSPECTION REQUIREMENTS: INSPECT SILT FENCE EVERY 7 DAYS OR WITHIN 24 HOURS AFTER A 0.5" 24-HOUR RAIN EVENT. SEDIMENT ACCUMULATIONS SHOULD BE REMOVED WHEN SEDIMENT BUILD-UP REACHES 1/2 THE HEIGHT OF THE SILT FENCE. THIS MAINTENANCE MUST BE COMPLETED WITHIN 24 HOURS OF DISCOVERY.

RESPONSIBLE STAFF (CONTRACTOR TO COMPLETE):

BMP DESCRIPTION: BIOLOGS

INSTALLATION SCHEDULE: INSTALL BIOLOGS AS DIRECTED ON THE SWPPP PLAN SHEETS, AND AS NEEDED THROUGHOUT CONSTRUCTION, PRIOR TO COMMENCING UP GRADIENT LAND DISTURBING ACTIVITIES.

MAINTENANCE AND INSPECTION REQUIREMENTS: INSPECT BIOLOGS EVERY 7 DAYS OR WITHIN 24 HOURS AFTER A 0.5" 24-HOUR RAIN EVENT. SEDIMENT ACCUMULATIONS SHOULD BE REMOVED WHEN SEDIMENT BUILD-UP REACHES 1/2 THE HEIGHT OF THE BIOLOG. THIS MAINTENANCE MUST BE COMPLETED WITHIN 24 HOURS OF DISCOVERY.

RESPONSIBLE STAFF (CONTRACTOR TO COMPLETE):

2.8 RETAIN SEDIMENT ON-SITE

ANY OFF-SITE ACCUMULATIONS OF SEDIMENT MUST BE REMOVED IN A MANNER AND AT A FREQUENCY SUFFICIENT TO MINIMIZE OFF-SITE IMPACT (E.G. FUGITIVE SEDIMENT IN STREETS COULD BE WASHED INTO STORM SEWERS BY THE NEXT RAIN AND/OR POSE A SAFETY HAZARD TO USERS OF PUBLIC STREETS. TEMPORARY SEDIMENTATION BASINS AND SEDIMENT TRAPS ARE TO BE UTILIZED DURING CONSTRUCTION TO CAPTURE AND TREAT SEDIMENT LADEN RUN OFF. THE TEMPORARY SEDIMENTATION BASINS HAVE BEEN DESIGNED TO PROVIDE 3,600 CUBIC FEET OF STORAGE BELOW THE OUTLET PIPE PER ACRE DRAINED TO THE BASIN. THE OUTLET STRUCTURE MUST BE DESIGNED TO WITHDRAW WATER FROM THE SURFACE IN ACCORDANCE WITH SECTION 14.5 AND 14.6 OF THE GENERAL PERMIT. PERMITTEES MUST PROVIDE ENERGY DISSIPATION FOR THE BASIN OUTLET WITHIN 24 HOURS AFTER A CONNECTION TO A SURFACE WATER (SECTION 14.7 OF THE GENERAL PERMIT)

BMP DESCRIPTION: TEMPORARY SEDIMENTATION BASIN

INSTALLATION SCHEDULE: INSTALL TEMPORARY SEDIMENTATION BASIN PRIOR TO BEGINNING UPSLOPE LAND DISTURBING ACTIVITIES. IF THIS IS NOT POSSIBLE DUE TO EXISTING TOPOGRAPHY, LIMIT DISTURBANCE TO ONLY THOSE AREAS NECESSARY TO INSTALL TEMPORARY SEDIMENTATION BASIN.

MAINTENANCE AND INSPECTION REQUIREMENTS: INSPECT TEMPORARY SEDIMENTATION BASINS EVERY 7 DAYS OR WITHIN 24 HOURS AFTER A 0.5" 24-HOUR RAIN EVENT. TEMPORARY AND PERMANENT SEDIMENTATION BASINS MUST BE DRAINED AND THE SEDIMENT REMOVED WHEN THE VOLUME OF SEDIMENT COLLECTED IN THE BASIN REACHES ½ THE STORAGE VOLUME. THIS MAINTENANCE MUST BE COMPLETED WITHIN 72 HOURS OF DISCOVERY, OR AS SOON AS FIELD CONDITIONS ALLOW ACCESS. IF CONDITIONS DO NOT ALLOW MAINTENANCE TO BE PERFORMED WITHIN 72 HOURS, DOCUMENT THE CAUSE OF DELAY ON THE MAINTENANCE FORM. REFER TO SECTION 3.1 OF THIS SWPPP FOR BASIN DRAINING GUIDELINES.

RESPONSIBLE STAFF (CONTRACTOR TO COMPLETE):

2.9 ESTABLISH VEHICLE TRACKING PADS

VEHICLE TRACKING PADS HAVE BEEN DESIGNED TO PREVENT SEDIMENT TRACK OFF. IF THERE IS EVIDENCE OF SEDIMENT TRACKING FROM VEHICLES IN PAVED AREAS, THE SEDIMENT MUST BE REMOVED BY STREET SWEEPING OR OTHER METHOD AS SOON AS FEASIBLY POSSIBLE, BUT NO LONGER THAN 24 HOURS AFTER DISCOVERY. (SECTION 9.11 AND 9.12 OF THE GENERAL PERMIT)

BMP DESCRIPTION: VEHICLE TRACKING PAD

INSTALLATION SCHEDULE: INSTALL VEHICLE TRACKING PAD AS SHOWN ON THE SWPPP PLAN SHEETS AS SOON AS POSSIBLE AT THE BEGINNING OF CONSTRUCTION ACTIVITIES. INSTALL ADDITIONAL VEHICLE TRACKING PADS AS NEEDED THROUGHOUT CONSTRUCTION.

MAINTENANCE AND INSPECTION REQUIREMENTS: INSPECT VEHICLE TRACKING PADS EVERY 7 DAYS OR WITHIN 24 HOURS AFTER A 0.5" 24-HOUR RAIN EVENT. VEHICLE TRACKING PADS MUST BE PERIODICALLY 'REFRESHED' TO ENSURE PROPER FUNCTIONING. MAINTENANCE SHOULD BE PERFORMED WHEN THE EXIT APPEARS SMOOTH AND COMPACTED OR WHEN THE VEHICLE TRACKING PAD CEASES TO FUNCTION PROPERLY. VEHICLE TRACKING PAD LOCATIONS SHOULD BE INSPECTED FOR SIGNS OF OFF-SITE SEDIMENT TRACKING. TRACKED SEDIMENT MUST BE REMOVED FROM ALL PAVED SURFACES WITHIN 24 HOURS OF DISCOVERY. STREET SWEEPING MUST BE USED IF VEHICLE TRACKING PADS ARE NOT ADEQUATE TO PREV

2.10 CONTROL STORMWATER DISCHARGE POINTS

1. PIPE OR OTHER TEMPORARY OR PERMANENT OUTLETS MUST BE STABILIZED WITH TEMPORARY OR PERMANENT ENERGY DISSIPATION WITHIN 24 HOURS AFTER CONNECTION TO A SURFACE WATER.
2. STABILIZE THE NORMAL WETTED PERIMETER OF A DRAINAGE DITCH OR SWALE WITHIN 200 FEET OF THE PROPERTY EDGE WITHIN 24 HOURS OF CONNECTION TO A SURFACE WATER. THE REMAINDER OF THE DITCH MUST BE STABILIZED WITHIN 7 CALENDAR DAYS OF CONNECTION.

BMP DESCRIPTION: RIPRAP

INSTALLATION SCHEDULE: INSTALL RIPRAP AS SHOWN ON SWPPP PLANS AND/OR GRADING PLANS. INSTALLATION MUST BE COMPLETED WITHIN 24 HOURS OF CONNECTING TO A SURFACE WATER.

MAINTENANCE AND INSPECTION REQUIREMENTS: INSPECT OUTLETS EVERY 7 DAYS OR WITHIN 24 HOURS AFTER A 0.5" 24-HOUR RAIN EVENT. REPAIR, REPLACE OR SUPPLEMENT NON-FUNCTIONING RIPRAP ENERGY DISSIPATION WITHIN 3 DAYS OR BY THE NEXT RAIN EVENT, WHICHEVER COMES FIRST. ANY OFF SITE ACCUMULATION OF SEDIMENT MUST BE REMOVED IN MANNER AND AT A FREQUENCY TO MINIMIZE OFF-SITE IMPACTS.

RESPONSIBLE STAFF (CONTRACTOR TO COMPLETE)

2.11 CHEMICAL EROSION AND SEDIMENT CONTROL BMPS

POLYMERS, FLOCCULANTS, OR OTHER SEDIMENTATION TREATMENT CHEMICALS MUST BE APPLIED AFTER CONVENTIONAL EROSION AND SEDIMENT CONTROL DEVICES ARE UTILIZED. CHEMICALS MAY ONLY BE APPLIED WHERE TREATED STORMWATER IS DIRECTED TO A SEDIMENT CONTROL SYSTEM WHICH ALLOWS FOR FILTRATION OR SETTLEMENT OF THE FLOC PRIOR TO DISCHARGE. CONSIDERATION MUST BE GIVEN WHEN SELECTING CHEMICALS TO THE EXPECTED SOIL TYPES TO BE EXPOSED DURING CONSTRUCTION, AND TO THE EXPECTED TURBIDITY, PH AND FLOW RATE OF STORMWATER FLOWING INTO THE CHEMICAL TREATMENT SYSTEM OR AREA. IF CHEMICALS ARE PART OF THE EROSION CONTROL PLAN, THEY MUST BE USED IN ACCORDANCE WITH ACCEPTED ENGINEERING PRACTICES, AND WITH DOSING SPECIFICATION AND SEDIMENT REMOVAL DESIGN SPECIFICATIONS PROVIDED BY THE MANUFACTURER OR PROVIDER/SUPPLIER OF THE APPLICABLE CHEMICALS.

SECTION 3: DEWATERING & BASIN DRAINING

3.1 DEWATERING AND BASIN DRAINING

ALLOWABLE NON-STORMWATER DISCHARGES, AS DEFINED BY THE GENERAL PERMIT, ARE LIMITED TO DEWATERING AND BASIN DRAINING. DEWATERING OR BASIN DRAINING THAT MAY HAVE TURBID OR SEDIMENT LADEN DISCHARGE WATER MUST BE DISCHARGED TO A TEMPORARY OR PERMANENT SEDIMENTATION BASIN ON THE PROJECT SITE WHENEVER POSSIBLE. IF THE WATER CANNOT BE DISCHARGED TO A SEDIMENTATION BASIN PRIOR TO ENTERING THE SURFACE WATER, IT MUST BE TREATED WITH THE APPROPRIATE BMPS, SUCH THAT THE DISCHARGE DOES NOT ADVERSELY AFFECT THE RECEIVING WATER OR DOWNSTREAM LANDOWNERS. THE CONTRACTOR MUST ENSURE THAT DISCHARGE POINTS ARE ADEQUATELY PROTECTED FROM EROSION AND SCOUR. THE DISCHARGE MUST BE DISPERSED OVER NATURAL ROCK RIPRAP, SAND BAGS, PLASTIC SHEETING OR OTHER ACCEPTED ENERGY DISSIPATION MEASURES. ADEQUATE SEDIMENTATION CONTROL MEASURES ARE REQUIRED FOR DISCHARGE WATER THAT CONTAINS SUSPENDED SOLIDS. ALL WATER FROM DEWATERING OR BASIN DRAINING MUST BE DISCHARGED IN A MANNER THAT DOES NOT CAUSE NUISANCE CONDITIONS, EROSION IN RECEIVING CHANNELS OR ON DOWNSLOPE PROPERTIES, OR INUNDATION IN WETLANDS CAUSING SIGNIFICANT ADVERSE IMPACT TO THE WETLAND. IF THE CONTRACTOR ELECTS TO UTILIZE FILTERS WITH BACKWASH WATER, THE CONTRACTOR MUST HAUL THE BACKWASH WATER AWAY FOR DISPOSAL, RETURN THE BACKWATER TO THE BEGINNING OF THE TREATMENT PROCESS, OR INCORPORATE THE BACKWASH WATER INTO THE SITE IN A MANNER THAT DOES NOT CAUSE EROSION. THE CONTRACTOR MUST REPLACE AND CLEAN THE FILTER MEDIA USED IN DEWATERING DEVICES WHEN REQUIRED TO RETAIN ADEQUATE FUNCTION. CONTRACTOR SHALL OBTAIN A WATER USE (APPROPRIATION) PERMIT FROM THE MINNESOTA DNR FOR DEWATERING ACTIVITIES THAT WILL WITHDRAW MORE THAN 10,000 GALLONS OF WATER PER DAY OR 1 MILLION GALLONS PER YEAR.

SECTION 4: GOOD HOUSEKEEPING BMPS

4.1 MATERIAL HANDLING AND WASTE MANAGEMENT

1. **SOLID WASTE DISPOSAL** - NO SOLID MATERIALS, INCLUDING CONSTRUCTION AND DEMOLITION MATERIALS, COLLECTED SEDIMENT, ASPHALT AND CONCRETE MILLINGS, SHALL BE ALLOWED TO BE CARRIED FROM THE SITE WITH STORM WATER. ALL SOLID WASTE, INCLUDING DISPOSABLE MATERIALS INCIDENTAL TO THE MAJOR CONSTRUCTION ACTIVITIES, MUST BE COLLECTED AND PLACED IN CONTAINERS. THE CONTAINERS WILL BE EMPTIED PERIODICALLY BY A CONTRACT TRASH DISPOSAL SERVICE AND HAULED AWAY FROM THE SITE. DISPOSAL OF SOLID WASTES MUST COMPLY WITH MPCA REQUIREMENTS.
2. **GROUNDWATER PROTECTION** - SUBSTANCES THAT HAVE THE POTENTIAL FOR POLLUTING SURFACE AND/OR GROUNDWATER MUST BE CONTROLLED BY WHATEVER MEANS NECESSARY IN ORDER TO ENSURE THAT THEY DO NOT DISCHARGE FROM THE SITE. AS AN EXAMPLE, SPECIAL CARE MUST BE EXERCISED DURING EQUIPMENT FUELING AND SERVICING OPERATIONS. IF A SPILL OCCURS, IT MUST BE CONTAINED AND DISPOSED OF SO THAT IT WILL NOT FLOW FROM THE SITE OR ENTER GROUNDWATER, EVEN IF THIS REQUIRES REMOVAL, TREATMENT, AND DISPOSAL OF SOIL. IN THIS REGARD, POTENTIALLY POLLUTING SUBSTANCES SHOULD BE HANDLED IN A MANNER CONSISTENT WITH THE IMPACT THEY REPRESENT.
3. **SANITARY FACILITIES** - ALL PERSONNEL INVOLVED WITH CONSTRUCTION ACTIVITIES MUST COMPLY WITH STATE AND LOCAL SANITARY SEPTIC SYSTEM REGULATIONS. PORTABLE TOILETS MUST BE POSITIONED SO THAT THEY ARE SECURE AND WILL NOT BE TIPPED OR KNOCKED OVER. TEMPORARY SANITARY FACILITIES WILL BE PROVIDED AT THE SITE THROUGHOUT THE CONSTRUCTION PHASE WHERE REQUIRED BY STATE OR LOCAL REGULATIONS. THEY MUST BE UTILIZED BY ALL CONSTRUCTION PERSONNEL AND BE SERVICED BY A COMMERCIAL OPERATOR.

4.2 ESTABLISH PROPER STORAGE, HANDLING & DISPOSAL PRACTICES

HAZARDOUS MATERIALS & TOXIC WASTE (INCLUDING OIL, DIESEL FUEL, GASOLINE, HYDRAULIC FLUIDS, PAINT SOLVENTS, PETROLEUM-BASED PRODUCTS, WOOD PRESERVATIVES, ADDITIVES, CURING COMPOUNDS, AND ACIDS) MUST BE STORED IN WATERPROOF CONTAINERS WITH SECONDARY CONTAINMENT, AND THEIR LOCATION(S) MUST BE NOTED ON THE SWPPP MAP. EXCEPT DURING APPLICATION, THE CONTENTS MUST BE KEPT IN TRUCKS OR WITHIN STORAGE FACILITIES IN ACCORDANCE WITH SECTION 12.4 OF THE GENERAL PERMIT. STORAGE AND DISPOSAL OF HAZARDOUS WASTE MUST BE IN COMPLIANCE WITH MCPA REGULATIONS. RUNOFF CONTAINING SUCH MATERIAL MUST BE COLLECTED, REMOVED FROM THE SITE, TREATED, AND DISPOSED AT AN APPROVED SOLID WASTE OR CHEMICAL DISPOSAL FACILITY.

BUILDING PRODUCTS THAT HAVE THE POTENTIAL TO LEACH POLLUTANTS AND PESTICIDES, HERBICIDES, INSECTICIDES, FERTILIZERS, TREATMENT CHEMICALS AND LANDSCAPE MATERIALS MUST BE UNDER COVER BY PLASTIC SHEETING OR TEMPORARY ROOFS TO PREVENT DISCHARGE, OR PROTECTED BY SIMILAR EFFECTIVE MEANS TO PREVENT CONTACT WITH STORMWATER.

4.3 DESIGNATE WASHOUT AREAS

THE CONTRACTOR SHALL DESIGNATE AREAS FOR CONCRETE AND OTHER (STUCCO, PAINT, FOR RELEASE OILS, CURING COMPOUNDS AND OTHER CONSTRUCTION MATERIALS RELATED TO THE CONSTRUCTION ACTIVITY) WASHOUTS, AND NOTE THE LOCATIONS ON THE SITE MAP. ALL LIQUID AND SOLID WASTES GENERATED BY WASHOUT OPERATIONS MUST BE CONTAINED IN A LEAK PROOF CONTAINMENT FACILITY OR IMPERMEABLE LAYER. A COMPACTED CLAY LINER IS NOT AN ACCEPTABLE IMPERMEABLE LAYER. THE LIQUID AND SOLID WASTES MUST NOT CONTACT THE GROUND, AND THERE MUST NOT BE RUNOFF FROM THE WASHOUT OPERATIONS OR AREAS. LIQUID AND SOLID WASTE MUST BE DISPOSED OF PROPERLY AND IN COMPLIANCE WITH MPCA REGULATIONS. A SIGN MUST BE INSTALLED ADJACENT TO EACH WASHOUT FACILITY TO INFORM SITE WORKERS TO UTILIZE PROPER FACILITIES FOR DISPOSAL OF CONCRETE AND OTHER WASTES.

BMP DESCRIPTION: CONCRETE WASHOUT

INSTALLATION SCHEDULE: PRIOR TO CONCRETE WORK.

MAINTENANCE AND INSPECTION REQUIREMENTS: INSPECT CONCRETE WASHOUTS FOR EVIDENCE OF DISCHARGE EVERY 7 DAYS OR WITHIN 24 HOURS AFTER A 0.5" 24-HOUR RAIN EVENT. REPAIR, REPLACE OR SUPPLEMENT NON-FUNCTIONING CONCRETE WASHOUTS WITHIN 3 DAYS OR BY THE NEXT USE, WHICHEVER COMES FIRST.

RESPONSIBLE STAFF (CONTRACTOR TO COMPLETE):

4.4 ESTABLISH PROPER EQUIPMENT/VEHICLE FUELING AND MAINTENANCE PRACTICES

THE CONTRACTOR SHALL DESIGNATE AREAS FOR EQUIPMENT FUELING, CLEANING, MAINTENANCE AND REPAIR, AND NOTE THE LOCATION(S) ON THE SWPPP SITE MAPS. RUNOFF MUST BE CONTAINED WITHIN THE DESIGNATED AREAS (I.E. THROUGH USE OF A TEMPORARY BERM). THE AREAS MUST NOT BE LOCATED IN ANY SURFACE WATER. SPECIAL CARE MUST BE EXERCISED DURING EQUIPMENT FUELING AND SERVICING OPERATIONS. IF A SPILL OCCURS, IT MUST BE CONTAINED AND DISPOSED OF SO THAT IT WILL NOT FLOW FROM THE SITE OR ENTER GROUNDWATER, EVEN IF THIS REQUIRES REMOVAL, TREATMENT, AND DISPOSAL OF SOIL. IT IS THE CONTRACTORS RESPONSIBILITY TO ENSURE THAT ADEQUATE SUPPLIES ARE AVAILABLE AT ALL TIMES TO CLEAN UP DISCHARGED MATERIALS AND THAT AN APPROPRIATE DISPOSAL METHOD IS AVAILABLE FOR RECOVERED SPILLED MATERIALS. NO ENGINE DEGREASING IS ALLOWED ON SITE.

4.5 CONTROL EQUIPMENT/VEHICLE WASHING

THE CONTRACTOR SHALL DESIGNATE LOCATION(S) FOR VEHICLE WASHING, AND NOTE THE LOCATION(S) ON THE SWPPP SITE MAP. RUNOFF FROM THE WASHING AREA MUST BE CONTAINED IN A SEDIMENT BASIN OR OTHER SIMILARLY EFFECTIVE CONTROLS AND WASTE FROM THE WASHING ACTIVITY MUST BE PROPERLY DISPOSED OF. THE CONTRACTOR MUST PROPERLY USE AND STORE SOAPS, DETERGENTS AND SOLVENTS. ENGINE DEGREASING OF TRUCKS AND OTHER CONSTRUCTION VEHICLES IS ALSO PROHIBITED.

4.6 SPILL PREVENTION AND CONTROL PLAN

1. **ACCIDENTAL SPILL** - DISCHARGE OF OIL OR OTHER HAZARDOUS SUBSTANCES IS SUBJECT TO REPORTING AND CLEAN UP REQUIREMENTS. IN CASE OF AN ACCIDENTAL SPILL, THE MINNESOTA POLLUTION CONTROL AGENCY IS TO BE NOTIFIED AT THEIR **24-HOUR TELEPHONE NUMBER: 651-649-5451**. REFER TO SECTION 12 OF THE GENERAL PERMIT.
2. **GROUNDWATER PROTECTION** - SUBSTANCES THAT HAVE THE POTENTIAL FOR POLLUTING SURFACE AND/OR GROUNDWATER MUST BE CONTROLLED BY WHATEVER MEANS NECESSARY IN ORDER TO ENSURE THAT THEY DO NOT DISCHARGE FROM THE SITE. AS AN EXAMPLE, SPECIAL CARE MUST BE EXERCISED DURING EQUIPMENT FUELING AND SERVICING OPERATIONS. IF A SPILL OCCURS, IT MUST BE CONTAINED AND DISPOSED OF SO THAT IT WILL NOT FLOW FROM THE SITE OR ENTER GROUNDWATER, EVEN IF THIS REQUIRES REMOVAL, TREATMENT, AND DISPOSAL OF SOIL. IN THIS REGARD, POTENTIALLY POLLUTING SUBSTANCES SHOULD BE HANDLED IN A MANNER CONSISTENT WITH THE IMPACT THEY REPRESENT.

SECTION 5: POST-CONSTRUCTION BMPS

PERMANENT STORMWATER TREATMENT FOR THIS PROJECT CONSISTS OF SUMP MANHOLES, AN UNDERGROUND RATE CONTROL SYSTEM, AND A PROPRIETARY TREATMENT DEVICE FOR WATER QUALITY.

BMP DESCRIPTION: UNDERGROUND INFILTRATION BASIN

INSTALLATION SCHEDULE: DURING GRADING ACTIVITIES

MAINTENANCE AND INSPECTION REQUIREMENTS: PRACTICE SHOULD BE INSPECTED SEMI-ANNUALLY TO ENSURE THE DRAWDOWN TIME OF 48-HOURS IS MAINTAINED. REFER TO MANUFACTURER'S RECOMMENDATIONS FOR INSPECTION AND MAINTENANCE.

RESPONSIBLE STAFF (CONTRACTOR TO COMPLETE):

BMP DESCRIPTION: SUMP MANHOLE

INSTALLATION SCHEDULE: ALONG WITH STORM SEWER NETWORK

MAINTENANCE AND INSPECTION REQUIREMENTS: PRACTICE SHOULD BE INSPECTED (AND CLEANED OUT IF DEEMED NECESSARY) SEMI-ANNUALLY TO ENSURE THAT SEDIMENT IS NOT BEGINNING TO WASH OUT DURING STORM EVENTS. DEVICES SHOULD BE CLEANED OUT AT LEAST ONCE PER YEAR OR AS NEEDED.

RESPONSIBLE STAFF (CONTRACTOR TO COMPLETE):

BMP DESCRIPTION: INFILTRATION BASIN

INSTALLATION SCHEDULE: AFTER SITE IS STABILIZED

MAINTENANCE AND INSPECTION REQUIREMENTS: NO HEAVY EQUIPMENT TO BE PLACED IN THESE AREAS, MINIMIZING THE COMPACTION. PERIODIC CHECK OF FLOW CONDITIONS TO TRACK DRAWDOWN OF THE WATER IN THE BASIN.

THE DEVICE WILL BE INSPECTED AND CLEARED OF SEDIMENT BUILD UP TWICE PER YEAR AND AS NEEDED. PLANTED VEGETATION ALSO NEEDS TO BE INSPECTED PERIODICALLY AND REPLACED AS NECESSARY. INSPECTION WILL ALSO INCLUDE CHECKING FOR ANY PROBLEMATIC EROSION TAKING PLACE ON THE SLOPES OF THE BASIN. EROSION ISSUES WILL BE REPAIRED AS THEY ARE FOUND.

RESPONSIBLE STAFF (CONTRACTOR TO COMPLETE):

BMP DESCRIPTION: FILTRATION BASIN

INSTALLATION SCHEDULE: THE FILTRATION BASIN WILL BE INSTALLED DURING THE INITIAL GRADING FOR THE SITE. THE STORM SEWER SYSTEM WILL THEN BE CONNECTED INTO THE FILTRATION BASIN.

MAINTENANCE AND INSPECTION REQUIREMENTS: ONCE CONSTRUCTION IS COMPLETE, THE BASIN WILL BE INSPECTED AND CLEARED OF ANY SEDIMENT BUILD-UP TWICE PER YEAR AND AS NEEDED. INSPECTION WILL ALSO INCLUDE CHECKING FOR EROSION ISSUES ALONG THE SLOPES OF THE BASIN AND CLEANING ANY DEBRIS FROM THE INLET PIPES.

RESPONSIBLE STAFF (CONTRACTOR TO COMPLETE):

SECTION 6: INSPECTIONS

6.1 INSPECTIONS

1. **INSPECTION FREQUENCY AND RESPONSIBILITY**

BETWEEN THE TIME THIS SWPPP IS IMPLEMENTED AND FINAL SITE STABILIZATION IS ACHIEVED AND THE NOTICE OF TERMINATION FILED WITH THE MPCA, ALL DISTURBED AREAS AND POLLUTANT CONTROLS MUST BE INSPECTED AT LEAST ONCE EVERY SEVEN CALENDAR DAYS AND WITHIN 24 HOURS FOLLOWING A RAINFALL OF 0.5 INCHES OR GREATER. THE PURPOSE OF SITE INSPECTIONS IS TO ASSESS PERFORMANCE OF POLLUTANT CONTROLS. THE INSPECTIONS WILL BE CONDUCTED BY THE CONTRACTOR'S DESIGNATED REPRESENTATIVE. BASED ON THESE INSPECTIONS, THE CONTRACTOR WILL DECIDE WHETHER IT IS NECESSARY TO MODIFY THIS SWPPP, ADD OR RELOCATE STRUCTURAL BMPS, OR WHATEVER ELSE MAY BE NEEDED IN ORDER TO PREVENT POLLUTANTS FROM LEAVING THE SITE VIA STORM WATER RUNOFF. IF THE SWPPP REQUIRES MODIFICATION, THOSE CHANGES TO THE SWPPP MUST BE DOCUMENTED. THE CONTRACTOR HAS THE DUTY TO CAUSE POLLUTANT CONTROL MEASURES TO BE REPAIRED, MODIFIED, MAINTAINED, SUPPLEMENTED, OR WHATEVER ELSE IS NECESSARY IN ORDER TO ACHIEVE EFFECTIVE POLLUTANT CONTROL.

2. **INSPECTION PROCEDURES** - EXAMPLES OF PARTICULAR ITEMS TO EVALUATE DURING SITE INSPECTIONS ARE LISTED BELOW. THIS LIST IS NOT INTENDED TO BE COMPREHENSIVE. DURING EACH INSPECTION THE INSPECTOR MUST EVALUATE OVERALL POLLUTANT CONTROL SYSTEM PERFORMANCE AS WELL AS PARTICULAR DETAILS OF INDIVIDUAL SYSTEM COMPONENTS. ADDITIONAL FACTORS SHOULD BE CONSIDERED AS APPROPRIATE TO THE CIRCUMSTANCES.

A. PRE-INSPECTION PREPARATION:

1. INSPECTORS SHOULD BE FAMILIAR WITH THE SWPPP, INCLUDING THE EROSION AND SEDIMENT CONTROL PLANS, PAST INSPECTION REPORTS, AND MAINTENANCE LOGS.
2. PAY SPECIAL ATTENTION TO STORM WATER DISCHARGE TO SPECIAL/IMPAIRED WATERS AND WETLANDS; DISCHARGES TO SPECIAL/IMPAIRED WATERS AND WETLANDS HAVE ADDITIONAL REQUIREMENTS THAT ARE DESCRIBED IN SECTION 23 OF THE GENERAL PERMIT, AND ADDRESSED IN THIS SWPPP.

B. SITE ENTRY:

1. BEFORE ENTERING THE SITE, OBSERVE THE SURROUNDINGS AND VARIOUS STAGES OF CONSTRUCTION. NOTE AREAS FOR IN-DEPTH REVIEW AND ANY POTENTIAL ISSUES.
2. THIS IS A GOOD TIME TO VIEW CONSTRUCTION SITE VEHICLE TRACKING PAD LOCATIONS AND PERIMETER CONTROLS.

C. RECORDS REVIEW:

1. VERIFY THAT A COPY OF THE SWPPP AND APPLICATION FOR THE NPDES STORM WATER PERMIT, AND COPIES OF ALL CONSTRUCTION SITE INSPECTIONS ARE ON SITE.
2. VERIFY THAT THE TIMING FOR INSTALLATION OF ALL EROSION PREVENTION AND SEDIMENT CONTROL BMPS, AS WELL AS CONSTRUCTION PHASING, IS GENERALLY BEING FOLLOWED.
3. SWPPPS ARE INTENDED TO BE DYNAMIC DOCUMENTS, VERIFY THAT AMENDMENTS OR CHANGES TO THE SWPPP ARE BEING MADE WHEN:
   A. A CHANGE IN DESIGN, CONSTRUCTION, OPERATION, MAINTENANCE, WEATHER OR SEASONAL CONDITIONS HAVE A SIGNIFICANT EFFECT ON STORM WATER DISCHARGES
   B. INSPECTIONS INDICATE THE SWPPP IS NOT EFFECTIVE
   C. THE SWPPP IS NOT CONSISTENT WITH THE TERMS OF THE GENERAL PERMIT

D. SITE INSPECTION (NOTE TIMELINES FOR MAINTENANCE INCLUDED IN INSPECTION/MAINTENANCE REPORT)

1. INSPECT DISCHARGE POINTS DOWNSTREAM AND OFF-SITE AREAS FOR SIGNS OF IMPACT.
2. INSPECT PERIMETER CONTROLS:
   A. HAVE PERIMETER CONTROLS BEEN PROPERLY INSTALLED AND MAINTAINED?
   B. ARE VEHICLE TRACKING PADS FUNCTIONING PROPERLY? ARE ADDITIONAL ENTRANCES/EXITS BEING USED THAT ARE NOT STABILIZED?
   C. ALL STORM DRAINS MUST BE PROTECTED AND TEMPORARY STOCKPILES MUST HAVE SEDIMENT CONTROLS INSTALLED.
   D. ALL EXPOSED SOILS MUST HAVE TEMPORARY OR PERMANENT EROSION PROTECTION WITHIN 7 DAYS OF INACTIVITY.
3. COMPARE BMPS IN THE SWPPP WITH CONSTRUCTION SITE CONDITIONS: ARE REQUIRED BMPS IN PLACE; ARE ADDITIONAL BMPS NEEDED; ARE BMPS IN PLACE PROPERLY INSTALLED AND MAINTAINED?
4. INSPECT AREAS THAT HAVE BEEN DISTURBED AND ARE NOT CURRENTLY BEING WORKED. ANY UNSEEDED OR UNMULCHED BARE AREAS THAT HAVE BEEN IDLE FOR 7 DAYS SHOULD BE NOTED.
5. INSPECT AREAS WITH FINAL STABILIZATION. IN ORDER FOR FINAL STABILIZATION TO BE ACHIEVED, AREAS MUST HAVE A UNIFORM COVER WITH A DENSITY OF 70% OVER ENTIRE AREA. TEMPORARY BMPS SHOULD BE REMOVED AND AREAS DISTURBED BY REMOVAL SEEDED AS NECESSARY.

E. EXIT INTERVIEW:

1. DEBRIEF THE PERSON IN CHARGE. EXPLAIN THE IDENTIFIED DEFICIENCIES AND ANY AREAS OF CONCERN.

F. A COPY OF THE COMPLETED INSPECTION REPORT MUST BE KEPT WITH THE SWPPP ON SITE.

THE INSPECTION REPORT USED SHOULD INCLUDE, AT A MINIMUM, THE FOLLOWING:

- DATE & TIME OF INSPECTION
- NAME OF INSPECTOR(S)
- FINDINGS OF INSPECTIONS AND RECOMMENDATIONS FOR CORRECTIVE ACTIONS
- CORRECTIVE ACTIONS TAKEN, INCLUDING DATES, TIMES AND NAMES OF PARTY COMPLETING MAINTENANCE
- DATE & AMOUNT OF RAINFALL
- RECORD OF ALL POINTS OF DISCHARGE FROM THE PROPERTY AND DESCRIPTION OF DISCHARGE
- NOTE TO UPDATE THE SWPPP

6.2 DELEGATION OF AUTHORITY

DULY AUTHORIZED REPRESENTATIVE(S) OR POSITION(S):

COMPANY OR ORGANIZATION NAME:
NAME:
POSITION:
ADDRESS:
CITY, STATE, ZIP CODE:
TELEPHONE NUMBER:
FAX/EMAIL:

6.3 CORRECTIVE ACTION LOG

THE INSPECTION/MAINTENANCE FORM, AVAILABLE UPON REQUEST, INCORPORATES BOTH INSPECTION AND MAINTENANCE REPORTING INTO A SINGLE FORM. THIS FORM ALSO SPECIFIES THE TIME ALLOWED FOR CORRECTIONS TO BE PERFORMED. IF THE PARTY PERFORMING INSPECTIONS CHOOSES TO USE ANOTHER INSPECTION FORM, A SEPARATE CORRECTIVE ACTION LOG MUST BE PROVIDED.

SECTION 7: RECORD KEEPING AND TRAINING

7.1 RECORDKEEPING

RECORD RETENTION - THE OWNER MUST KEEP THE SWPPP INCLUDING ALL CHANGES MADE TO IT DURING CONSTRUCTION (SEE SECTION 7.2 OF THIS SWPPP), ALONG WITH THE FOLLOWING ADDITIONAL RECORDS ON FILE FOR THREE YEARS AFTER COMPLETION OF THE CONSTRUCTION PROJECT (FINAL STABILIZATION AND NOTICE OF TERMINATION):

1. ANY OTHER STORMWATER RELATED PERMITS REQUIRED FOR THE PROJECT
2. RECORDS OF ALL INSPECTIONS AND MAINTENANCE CONDUCTED DURING CONSTRUCTION
3. ALL PERMANENT OPERATION AND MAINTENANCE AGREEMENTS THAT HAVE BEEN IMPLEMENTED, INCLUDING ALL RIGHT OF WAY, CONTRACTS, COVENANTS AND OTHER BINDING REQUIREMENTS REGARDING PERPETUAL MAINTENANCE
4. ALL REQUIRED CALCULATIONS FOR DESIGN OF THE TEMPORARY AND PERMANENT STORM WATER MANAGEMENT SYSTEMS

7.2 AMENDMENTS

THE CONTRACTOR SHALL KEEP A RECORD LOG OF ALL MODIFICATIONS TO THE SWPPP. AN EXAMPLE OF A SWPPP UPDATE LOG FORM CAN BE PROVIDED UPON REQUEST.

MODIFICATIONS TO THE SWPPP - THIS SWPPP INTENDS TO CONTROL WATER-BORNE AND LIQUID POLLUTANT DISCHARGES BY SOME COMBINATION OF INTERCEPTION, FILTRATION, AND CONTAINMENT. THE GENERAL CONTRACTOR AND SUBCONTRACTORS IMPLEMENTING THIS SWPPP MUST REMAIN ALERT TO THE NEED TO PERIODICALLY REFINE AND UPDATE THE SWPPP IN ORDER TO ACCOMPLISH THE INTENDED GOALS. THIS SWPPP MUST BE AMENDED AS NECESSARY DURING THE COURSE OF CONSTRUCTION IN ORDER TO KEEP IT CURRENT WITH THE POLLUTANT CONTROL MEASURES UTILIZED AT THE SITE. AMENDING THE SWPPP DOES NOT MEAN THAT IT HAS TO BE REPRINTED. IT IS ACCEPTABLE TO ADD ADDENDA, SKETCHES, NEW SECTIONS, AND/OR REVISED DRAWINGS. THIS SWPPP MUST BE UPDATED AS NECESSARY TO INCLUDE ADDITIONAL REQUIREMENTS, SUCH AS ADDITIONAL OR MODIFIED BMPS, DESIGNED TO CORRECT PROBLEMS IDENTIFIED OR ADDRESS SITUATIONS WHENEVER:

1. THERE IS A CHANGE IN DESIGN, CONSTRUCTION, OPERATION, MAINTENANCE, WEATHER OR SEASONAL CONDITIONS THAT HAS A SIGNIFICANT EFFECT ON THE DISCHARGE OF POLLUTANTS TO SURFACE WATERS OR UNDERGROUND WATERS.
2. INSPECTIONS OR INVESTIGATIONS BY SITE OPERATORS, LOCAL, STATE OR FEDERAL OFFICIALS INDICATE THE SWPPP IS NOT EFFECTIVE IN ELIMINATING OR SIGNIFICANTLY MINIMIZING THE DISCHARGE OF POLLUTANTS TO SURFACE WATERS OR UNDERGROUND WATERS OR THAT THE DISCHARGES ARE CAUSING WATER QUALITY STANDARD EXCEEDANCES.
3. THE SWPPP IS NOT ACHIEVING THE GENERAL OBJECTIVES OF CONTROLLING POLLUTANTS IN STORM WATER DISCHARGES ASSOCIATED WITH CONSTRUCTION ACTIVITY, OR THE SWPPP IS NOT CONSISTENT WITH THE TERMS AND CONDITIONS OF THE GENERAL PERMIT.
4. THE MPCA HAS DETERMINED THAT THE PROJECT'S STORM WATER DISCHARGES MAY CAUSE OR CONTRIBUTE TO NON-ATTAINMENT OF ANY APPLICABLE WATER STANDARD, OR THAT THE SWPPP DOES NOT INCORPORATE REQUIREMENTS RELATED TO AN APPROVED TOTAL MAXIMUM DAILY LOAD (TMDL) IMPLEMENTATION PLAN. IN THIS CASE, THE SWPPP MUST BE UPDATED OR A SUPPLEMENTAL BMP ACTION PLAN DEVELOPED TO ADDRESS THE IDENTIFIED CONCERNS.

7.3 TRAINING

THE PERMITTEE(S) MUST FULFILL TRAINING REQUIREMENTS AND INCLUDE RECORDS OF TRAINING IN THE SWPPP. REFRESHER TRAINING MUST BE ATTENDED EVERY THREE YEARS STARTING THREE YEARS, FROM THE ISSUANCE OF THE 2018 GENERAL PERMIT (ISSUED 8/1/18). INDIVIDUALS REQUIRED TO BE TRAINED INCLUDE:

1. INDIVIDUALS PREPARING THE SWPPP
2. INDIVIDUALS OVERSEEING IMPLEMENTATION OF, REVISING, AND AMENDING THE SWPPP AND INDIVIDUALS PERFORMING INSPECTIONS. ONE OF THESE INDIVIDUALS MUST BE AVAILABLE FOR AN ON SITE INSPECTION WITHIN 72 HOURS UPON REQUEST BY THE MPCA.
3. INDIVIDUALS PERFORMING OR SUPERVISING THE INSTALLATION, MAINTENANCE AND REPAIR OF BMPS. AT LEAST ONE INDIVIDUAL ON A PROJECT MUST BE TRAINED IN THESE JOB DUTIES.

THE CONTENT AND EXTENT OF TRAINING MUST BE COMMENSURATE WITH THE INDIVIDUAL'S JOB DUTIES AND RESPONSIBILITIES WITH REGARD TO ACTIVITIES COVERED UNDER THE GENERAL PERMIT. AT LEAST ONE INDIVIDUAL TRAINED IN THE JOB DUTIES LISTED ABOVE MUST BE PRESENT ON THE SITE OR AVAILABLE TO THE SITE IN 72 HOURS.

TRAINING DOCUMENTATION MUST INCLUDE:

1. NAMES OF PERSONNEL ASSOCIATED WITH THE PROJECT THAT ARE REQUIRED TO BE TRAINED
2. DATES OF TRAINING AND NAMES OF INSTRUCTOR AND ENTITY PROVIDING TRAINING
3. CONTENT OF TRAINING COURSE, INCLUDING NUMBER OF HOURS OF TRAINING
4. DOCUMENTATION MUST BE KEPT WITH THE SWPPP. TRAINING RECORD/CERTIFICATION TEMPLATE IS AVAILABLE UPON REQUEST.

INDIVIDUALS MUST BE TRAINED BY LOCAL, STATE, FEDERAL AGENCIES, PROFESSIONAL ORGANIZATIONS, OR OTHER ENTITIES WITH EXPERTISE IN EROSION PREVENTION, SEDIMENT CONTROL, OR PERMANENT STORMWATER MANAGEMENT SUCH AS THE UNIVERSITY OF MINNESOTA, MINNESOTA EROSION CONTROL ASSOCIATION, SOIL AND WATER CONSERVATION DISTRICTS, OR THE MPCA.

SECTION 8: FINAL STABILIZATION / PERMIT TERMINATION

FINAL STABILIZATION - TO ACHIEVE FINAL STABILIZATION OF THE SITE, THE CONTRACTOR WILL IMPLEMENT THE FOLLOWING MEASURES AFTER ALL SOIL DISTURBING ACTIVITIES AT THE SITE HAVE BEEN COMPLETED.

1. ALL SOILS MUST BE STABILIZED BY A UNIFORM PERENNIAL VEGETATIVE COVER WITH A DENSITY OF 70 PERCENT OVER THE ENTIRE PERVIOUS SURFACE AREA, OR BY OTHER EQUIVALENT MEANS NECESSARY TO PREVENT SOIL FAILURE UNDER EROSIVE CONDITIONS. REFER TO LANDSCAPING PLANS/SPECIFICATIONS FOR TYPE OF VEGETATIVE COVER.
2. THE PERMANENT STORMWATER MANAGEMENT SYSTEM IS CONSTRUCTED, MEETS ALL REQUIREMENTS IN SECTIONS 15, 16, 17, 18, AND 19 OF THE GENERAL PERMIT AND IS OPERATING AS DESIGNED. ALL SEDIMENT HAS BEEN REMOVED FROM CONVEYANCE SYSTEMS AND DITCHES ARE STABILIZED WITH PERMANENT COVER. ALL TEMPORARY EROSION PREVENTION AND SEDIMENT CONTROL BMPS MUST BE REMOVED.
3. FOR CONSTRUCTION PROJECTS ON LAND USED FOR AGRICULTURAL PURPOSES FINAL STABILIZATION MAY BE ACCOMPLISHED BY RETURNING THE DISTURBED LAND TO ITS PRECONSTRUCTION AGRICULTURAL USE.
4. FOR RESIDENTIAL CONSTRUCTION ONLY, INDIVIDUAL LOTS ARE CONSIDERED FINALLY STABILIZED IF THE STRUCTURE(S) ARE FINISHED AND TEMPORARY EROSION PROTECTION AND DOWNGRADIENT PERIMETER CONTROL HAS BEEN COMPLETED AND THE RESIDENCE HAS BEEN SOLD TO THE HOMEOWNER. ADDITIONALLY, THE PERMITTEE HAS DISTRIBUTED THE MPCA'S "HOMEOWNER FACT SHEET" TO THE HOMEOWNER TO INFORM THE HOMEOWNER OF THE NEED FOR, AND BENEFITS OF, PERMANENT COVER.

PERMIT TERMINATION - TO ACHIEVE PERMIT TERMINATION FOR THE SITE, PERMITTEES MUST COMPLY WITH SECTIONS 4 & 13 OF THE GENERAL PERMIT.

NO	DATE	BY	CKD	APPR	COMMENT
	05/03/2022				Final Site and Building Plan Application

I hereby certify that this plan, specification, or

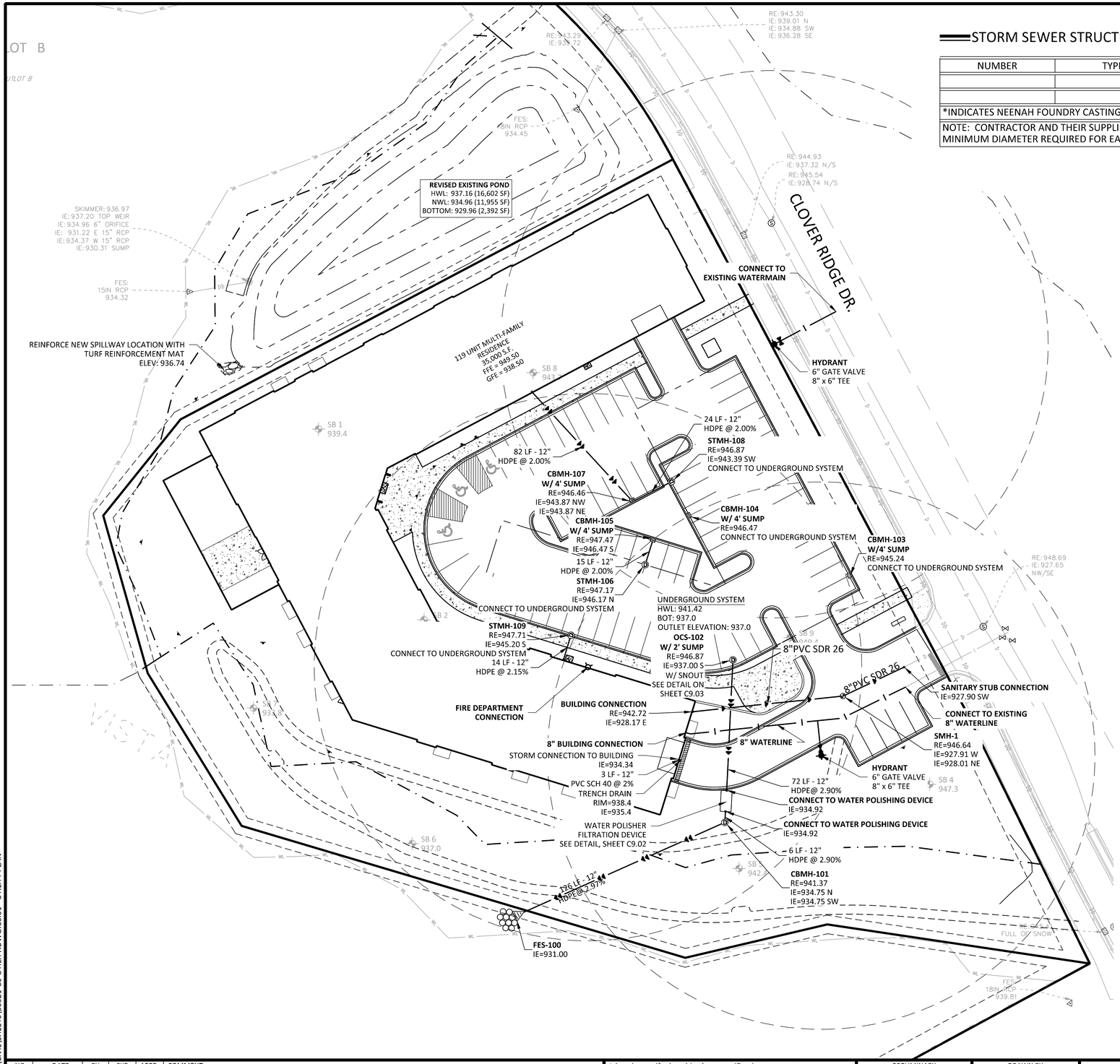

STORM SEWER STRUCTURE SCHEDULE

NUMBER	TYPE	CASTING*

*INDICATES NEENAH FOUNDRY CASTING NO., OR APPROVED EQUAL

NOTE: CONTRACTOR AND THEIR SUPPLIER SHALL DETERMINE THE MINIMUM DIAMETER REQUIRED FOR EACH STORM SEWER STRUCTURE.

LEGEND

- SANITARY SEWER
- FORCEMAIN (SAN.)
- STORM SEWER
- DRAINTILE
- WATERMAIN
- UNDERGROUND GAS LINE
- UNDERGROUND TELEPHONE
- ELECTRIC
- CONCRETE CURB
- EASEMENT LINE

UTILITY CONSTRUCTION NOTES

1. THE UTILITY IMPROVEMENTS FOR THIS PROJECT SHALL BE CONSTRUCTED IN ACCORDANCE WITH THE "STANDARD UTILITIES SPECIFICATIONS" AS PUBLISHED BY THE CITY ENGINEERS ASSOCIATION OF MINNESOTA (CEAM), EXCEPT AS MODIFIED HEREIN. CONTRACTOR SHALL OBTAIN A COPY OF THESE SPECIFICATIONS.
   a. ALL UTILITIES SHALL BE CONSTRUCTED IN ACCORDANCE WITH ALL LOCAL, STATE AND FEDERAL REQUIRMENTS, INCLUDING BUT NOT LIMITED TO CITY, DEPARTMENT OF LABOR AND INDUSTRY AND MINNESOTA DEPARTMENT OF HEALTH REQUIREMENTS.
   b. CONTRACTOR SHALL NOT OPEN, TURN OFF, INTERFERE WITH, OR ATTACH ANY PIPE OR HOSE TO OR TAP WATERMAIN BELONGING TO THE CITY UNLESS DULY AUTHORIZED TO DO SO BY THE CITY. ANY ADVERSE CONSEQUENCES OF ANY SCHEDULED OR UNSCHEDULED DISRUPTIONS OF SERVICE TO THE PUBLIC ARE THE LIABILITY OF CONTRACTOR.
   c. A MINIMUM VERTICAL SEPARATION OF 18 INCHES, AND HORIZONTAL SEPARATION OF 10-FEET, BETWEEN OUTSIDE PIPE AND/OR STRUCTURE WALLS, IS REQUIRED AT ALL WATERMAIN AND SEWER MAIN (BUILDING, STORM AND SANITARY) CROSSINGS.
2. ALL MATERIALS SHALL BE AS SPECIFIED IN CEAM SPECIFICATIONS EXCEPT AS MODIFIED HEREIN.
   a. ALL MATERIALS SHALL COMPLY WITH THE REQUIREMENTS OF THE CITY.
   b. ALL SANITARY SEWER TO BE PVC SDR-35, UNLESS NOTED OTHERWISE.
   i. ALL SANITARY SEWER SERVICES TO BUILDING SHALL BE PVC SCH 40 CONFORMING TO ASTM D2665.
   c. ALL WATERMAIN TO BE DUCTILE IRON - CLASS 52, or PVC C-900, UNLESS NOTED OTHERWISE.
   i. ALL WATERMAIN TO HAVE 7.5-FEET OF COVER OVER TOP OF WATERMAIN.
   ii. PROVIDE THRUST BLOCKING AND MECHANICAL JOINT RESTRAINTS ON ALL WATERMAIN JOINTS PER CITY STANDARDS.
   d. ALL STORM SEWER PIPE TO BE SMOOTH INTERIOR DUAL WALL HDPE PIPE WITH WATERTIGHT GASKETS, UNLESS NOTED OTHERWISE.
   i. ALL STORM SEWER PIPE FOR ROOF DRAIN SERVICES TO BUILDING SHALL BE PVC SCH 40 CONFORMING TO ASTM D2665.
   e. RIP RAP SHALL BE Mn/DOT CLASS 3.
3. COORDINATE ALL BUILDING SERVICE CONNECTION LOCATIONS AND INVERT ELEVATIONS WITH MECHANICAL CONTRACTOR PRIOR TO CONSTRUCTION.
4. ALL BUILDING SERVICE CONNECTIONS (STORM, SANITARY, WATER) WITH FIVE FEET OR LESS COVER ARE TO BE INSULATED FROM BUILDING TO POINT WHERE 5-FEET OF COVER IS ACHIEVED.
5. CONTRACTOR SHALL TAKE ALL PRECAUTIONS NECESSARY TO AVOID PROPERTY DAMAGE TO ADJACENT PROPERTIES DURING THE CONSTRUCTION PHASES OF THIS PROJECT. CONTRACTOR WILL BE HELD SOLELY RESPONSIBLE FOR ANY DAMAGES TO THE ADJACENT PROPERTIES OCCURRING DURING THE CONSTRUCTION PHASES OF THIS PROJECT.
6. SAFETY NOTICE TO CONTRACTORS: IN ACCORDANCE WITH GENERALLY ACCEPTED CONSTRUCTION PRACTICES, CONTRACTOR WILL BE SOLELY AND COMPLETELY RESPONSIBLE FOR CONDITIONS ON THE JOB SITE, INCLUDING SAFETY OF ALL PERSONS AND PROPERTY DURING PERFORMANCE OF THE WORK. THIS REQUIREMENT WILL APPLY CONTINUOUSLY AND NOT BE LIMITED TO NORMAL WORKING HOURS. THE DUTY OF THE ENGINEER OR THE DEVELOPER TO CONDUCT CONSTRUCTION REVIEW OF CONTRACTOR'S PERFORMANCE IS NOT INTENDED TO INCLUDE REVIEW OF THE ADEQUACY OF CONTRACTOR'S SAFETY MEASURES IN, ON OR NEAR THE CONSTRUCTION SITE.
7. ALL AREAS OUTSIDE THE PROPERTY BOUNDARIES THAT ARE DISTURBED BY UTILITY CONSTRUCTION SHALL BE RESTORED IN KIND. SODDED AREAS SHALL BE RESTORED WITH 6 INCHES OF TOPSOIL PLACED BENEATH THE SOD.
8. CONTRACTOR SHALL BE RESPONSIBLE FOR PROVIDING AND MAINTAINING TRAFFIC CONTROL DEVICES SUCH AS BARRICADES, WARNING SIGNS, DIRECTIONAL SIGNS, FLAGMEN AND LIGHTS TO CONTROL THE MOVEMENT OF TRAFFIC WHERE NECESSARY. TRAFFIC CONTROL DEVICES SHALL CONFORM TO APPROPRIATE MINNESOTA DEPARTMENT OF TRANSPORTATION STANDARDS.
9. ALL SOILS TESTING SHALL BE COMPLETED BY AN INDEPENDENT SOILS ENGINEER. EXCAVATION FOR THE PURPOSE OF REMOVING UNSTABLE OR UNSUITABLE SOILS SHALL BE COMPLETED AS REQUIRED BY THE SOILS ENGINEER. THE UTILITY BACKFILL CONSTRUCTION SHALL COMPLY WITH THE REQUIREMENTS OF THE SOILS ENGINEER. CONTRACTOR SHALL BE RESPONSIBLE FOR COORDINATING ALL REQUIRED SOILS TESTS AND SOIL INSPECTIONS WITH THE SOILS ENGINEER. A GEOTECHNICAL ENGINEERING REPORT HAS BEEN COMPLETED BY:COMPANY: BRAUN INTERTEC
   ADDRESS: 11001 HAMPSHIRE AVENUE S, MINNEAPOLIS, MN 55438
   PHONE:952.995.2000
   DATED: 03/07/2022
   CONTRACTOR SHALL OBTAIN A COPY OF THIS SOILS REPORT.
10. CONTRACTOR SHALL SUBMIT 2 COPIES OF SHOP DRAWINGS FOR MANHOLE AND CATCH BASIN STRUCTURES TO SAMBATEK. CONTRACTOR SHALL ALLOW 5 WORKING DAYS FOR SHOP DRAWING REVIEW.
11. CONTRACTOR AND MATERIAL SUPPLIER SHALL DETERMINE THE MINIMUM DIAMETER REQUIRED FOR EACH STORM SEWER STRUCTURE.
12. THE UNDERGROUND STORMWATER SYSTEM SHOWN ON THE UTILITY PLAN AND THE DETAIL SHEETS IS FOR INFORMATIONAL PURPOSES ONLY AND DEPICTS THE MINIMUM STORAGE REQUIREMENTS AND THE SYSTEM ELEVATIONS. THE CONTRACTOR (WITH THEIR SUPPLIER OR DESIGNER) SHALL SUBMIT DESIGN DRAWINGS TO THE ENGINEER FOR REVIEW AND APPROVAL PRIOR TO CONSTRUCTION. THE DESIGN DRAWINGS SHALL DEPICT THE FINAL LAYOUT AND DETAILS FOR CONSTRUCTION. THE DRAWINGS SHALL BE CERTIFIED BY A LICENSED ENGINEER FOR THE STATE IN WHICH THE PROJECT IS CONSTRUCTED. THE SUBMITTAL SHALL INCLUDE ALL NECESSARY PRODUCT INFORMATION, DESIGN CALCULATIONS AND BEDDING REQUIREMENTS FOR THE PROPOSED STORMWATER SYSTEM. FOLLOWING CONSTRUCTION, THE CERTIFYING ENGINEER SHALL SUBMIT A LETTER TO THE OWNER AND ENGINEER INDICATING THEY OBSERVED THE INSTALLATION AND THE INSTALLATION OF THE STORMWATER SYSTEM WAS IN CONFORMANCE WITH THE CERTIFIED DRAWINGS.

THE SUBSURFACE UTILITY INFORMATION SHOWN ON THESE PLANS IS A UTILITY QUALITY LEVEL D. THIS QUALITY LEVEL WAS DETERMINED ACCORDING TO THE GUIDELINES OF ASCE/CI 38-02, TITLED "STANDARD GUIDELINES FOR THE COLLECTION AND DEPICTION OF EXISTING SUBSURFACE UTILITY DATA." THE CONTRACTOR AND/OR SUBCONTRACTORS SHALL DETERMINE THE EXACT LOCATION OF ALL EXISTING UTILITIES BEFORE COMMENCING WORK, BY CONTACTING THE NOTIFICATION CENTER (GOPHER STATE ONE FOR MINNESOTA). THE CONTRACTOR AND/OR SUBCONTRACTOR AGREE TO BE FULLY RESPONSIBLE FOR ANY AND ALL DAMAGES, WHICH MIGHT BE OCCASIONED BY HIS OR HER FAILURE TO EXACTLY LOCATE AND PRESERVE ANY AND ALL UTILITIES (UNDERGROUND AND OVERHEAD).

IF THE CONTRACTOR ENCOUNTERS ANY DRAIN TILE WITHIN THE SITE, HE OR SHE SHALL NOTIFY THE ENGINEER WITH THE LOCATION, SIZE, INVERT AND IF THE TILE LINE IS ACTIVE. NO DRAIN TILE SHALL BE BACKFILLED WITHOUT APPROVAL FROM THE PROJECT ENGINEER.

IT SHALL BE THE RESPONSIBILITY OF THE CONTRACTOR TO RELOCATE ALL EXISTING UTILITIES WHICH CONFLICT WITH THE PROPOSED IMPROVEMENTS SHOWN ON THE PLANS.

NORTH

0 30 60
SCALE IN FEET

NO	DATE	BY	CKD	APPR	COMMENT
	05/03/2022				Final Site and Building Plan Application

I hereby certify that this plan, specification, or report was prepared by me or under my direct supervision and that I am a duly Licensed Professional Engineer under the laws of the State of Minnesota.

Print Name: Brian W. Frank

Date _____ License # _____

PRELIMINARY | DESIGN REVIEW | PERMIT SUBMITTAL | CONSTRUCTION DOCUMENTS

DRAWN BY KLS | DESIGNED BY | CHECKED BY | PROJECT NO. 50521

Sambatek
www.sambatek.com
Engineering | Surveying | Planning | Environmental

UTILITY PLAN

AV DEVELOPMENT, LLC
CLOVER RIDGE APARTMENTS

CHASKA, MINNESOTA

SHEET C6.01 5 OF 10 REV.

© 2021 Sambatek

C:\05 (LMS TECH) | JACOB MITZEL, PE (MN) | 5/4/2022 2:59:48 PM
C:\PROJECTS\50521\CAD\CIVIL\SHEETS\50521-C6-UTILITY.DWG:C6.01 - UTILITY PLAN

PRECAST INVERT WITH A MINIMUM 1% THROUGH SLOPE REQUIRED.

PRECAST INVERT MUST BE 1/2 DIAMETER OF THE PIPE AND BENCHES SLOPED 2" TOWARD THE INVERT.

FRAME	A	B
R1642-2310B	27"	7"
R1755G	27"	7"

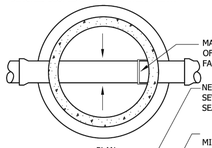

PLAN

MANHOLE STEPS SHALL BE PLACED SO THAT OFFSET VERTICAL PORTION OF CONE IS FACING DOWNSTREAM.

NEENAH COVER **R-1642-5001**, LETTERED "SANITARY SEWER" WITH 2 CONCEALED PICK HOLES AND SELF SEALING LID. SEE SPECIFICATION FOR CASTING NUMBER.

MINIMUM OF 2 MAXIMUM OF 4 ADJUSTMENT RINGS. FINAL RING MATERIAL AND ADHESIVE TO BE SPECIFIED BY OWNER ON A PROJECT BASIS.

MAXIMUM 20"ADJUSTMENT ALLOWED INCLUDING RINGS AND CASTING.

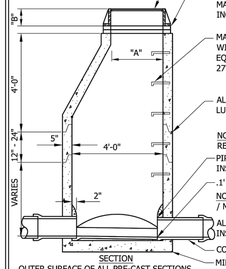

MANHOLE STEPS, COPOLYMER POLYPROPYLENE PLASTIC, WITH 1/2" GRADE 60 STEEL REINFORCEMENT OR EQUAL, 16" ON CENTER. (NO STEPS ALLOWED IN UPPER 27" BARREL)

ALL JOINTS IN MANHOLE TO HAVE SELF LUBRICATING RUBBER GASKETS AND RAMNECK.

NOTE: ALL INFILTRATION AREAS SHALL BE REPAIRED UNTIL MANHOLE IS WATER TIGHT.

PIPE SHALL BE CUT 2" FROM INSIDE FACE OF WALL.

.1' DROP ACROSS INVERTS MIN.

NOTE: KOR-N-SEAL MANHOLE TO BE USED FOR PIPE / MANHOLE CONNECTION.

ALL DOG HOUSES SHALL BE GROUTED ON INSIDE OF MANHOLE.

COMPACT TO TOP OF PIPE, TO FIRST JOINT.

MINIMUM THICKNESS OF PRECAST BASE IS 6" FOR 14' DEEP OR LESS, AND INCREASES 1" IN THICKNESS FOR EVERY 4' OF DEPTH GREATER THAN 14'.

SECTION

OUTER SURFACE OF ALL PRE-CAST SECTIONS SHALL RECEIVE 2 COATS OF BITUMINOUS DAMP PROOFING (SEE ENGINEERING GUIDELINES OR PROJECT SPECIFICATIONS FOR MORE DETAILS) .

Stantec
2335 Highway 36 W
St. Paul, MN 55113
www.stantec.com

SANITARY SEWER MANHOLE

CHASKA, MINNESOTA

LAST REVISION: MARCH 2018

PLATE NO. SAN-1

GROUT BOTTOM OF MANHOLE TO A MINIMUM OF 1/2 DIAMETER AT PIPE AND SLOPE GROUT 2" TOWARD INVERT.

MANHOLE STEPS SHALL BE PLACED SO THAT OFFSET VERTICAL PORTION OF CONE IS FACING DOWNSTREAM FOR ALL LINES UP TO 24". PLACE STEPS ON RIGHT HAND SIDE WHEN FACING DOWN STREAM FOR ALL 24 " AND OVER.

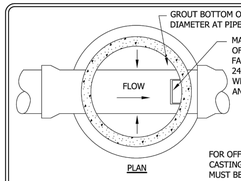

PLAN

FRAME	A	B
R1642-2310B	27"	7"

FOR OFF-ROAD SITUATIONS, USE R1916F CASTING MARKED "STORM SEWER". COVERS MUST BE SECURED TO PREVENT REMOVAL.

NEENAH COVER **R1642-5040** LETTERED, "STORM SEWER", WITH 2 CONCEALED PICK HOLES.

MINIMUM OF 2 MAXIMUM OF 4 CONCRETE ADJUSTMENT RINGS WITH FULL BED OF MORTAR BETWEEN EACH RING.

- MAXIMUM 20" ADJUSTMENT ALLOWED INCLUDING RINGS AND CASTING.

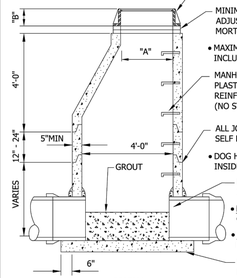

MANHOLE STEPS, COPOLYMER POLYPROPYLENE PLASTIC, WITH 1/2" GRADE 60 STEEL REINFORCEMENT OR EQUAL, 16" ON CENTER. (NO STEPS ALLOWED IN UPPER 27" BARREL.)

ALL JOINTS IN MANHOLE TO HAVE SELF LUBRICATING RUBBER GASKETS.

- DOG HOUSES MUST BE GROUTED BOTH INSIDE AND OUTSIDE OF STRUCTURE.

PIPE SHALL BE CUT OUT 2" FROM INSIDE FACE OF WALL.

- NOTE: KOR-N-SEAL MANHOLE OR EQUAL CONSIDERED ACCEPTABLE ALTERNATE.
- NOTE: A MINIMUM SLOPE OF 1% IS REQUIRED ACROSS THE INVERT.

MINIMUM SLAB THICKNESS, 6" TO 14' DEPTH. INCREASE THICKNESS 1" FOR EACH 4' OF DEPTH GREATHER THAN 14', AND REINFORCE WITH PER MNDOT STD 4011

SECTION

Stantec
2335 Highway 36 W
St. Paul, MN 55113
www.stantec.com

STORM SEWER MANHOLE

CHASKA, MINNESOTA

LAST REVISION: MARCH 2018

PLATE NO. STO-1

SEE CITY PLATE NO. STO-10 FOR RIPRAP PLACEMENT.

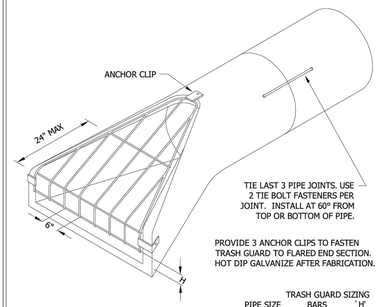

ISOMETRIC

PROVIDE 3 ANCHOR CLIPS TO FASTEN TRASH GUARD TO FLARED END SECTION. HOT DIP GALVANIZE AFTER FABRICATION.

TRASH GUARD SIZING

PIPE SIZE	BARS	'H'	BOLTS
12"	3/4"Ø	2 1/2"	5/8"
15"	3/4"Ø	3"	5/8"
18"	3/4"Ø	4"	5/8"
21"-24"	1"Ø	4"	3/4"
27"-36"	1"Ø	5"	3/4"
42"	1"Ø	6"	3/4"
48"-54"	1 1/4"Ø	6"	1"
60"-72"	1 1/4"Ø	7"	1"
78"-90"	1 1/4"Ø	8"	1"

Stantec
2335 Highway 36 W
St. Paul, MN 55113
www.stantec.com

FLARED END SECTION AND TRASH GUARD

CHASKA, MINNESOTA

LAST REVISION: FEB. 1995

PLATE NO. STO-10

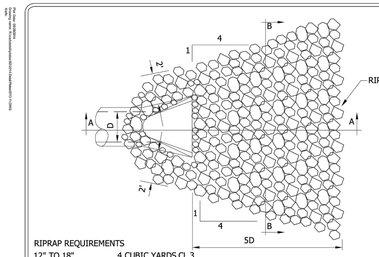

RIPRAP REQUIREMENTS

12" TO 18"	4 CUBIC YARDS CL.3
21" TO 27"	8 CUBIC YARDS CL.3
30" TO 36"	12 CUBIC YARDS CL.3
42" TO 48"	16 CUBIC YARDS CL.3
54" AND UP	20 CUBIC YARDS CL 4

PLAN

(ONE CUBIC YARD IS APPROXIMATELY 2,800 LBS.)

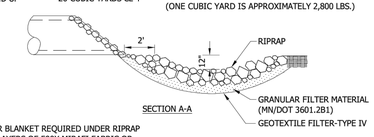

SECTION A-A

NOTE
FILTER BLANKET REQUIRED UNDER RIPRAP OR 2 LAYERS OF 500X MIRAFI FABRIC OR EQUAL

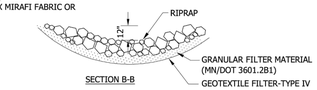

SECTION B-B

Stantec
2335 Highway 36 W
St. Paul, MN 55113
www.stantec.com

RIPRAP AT OUTLETS

CHASKA, MINNESOTA

LAST REVISION: APRIL 2004

PLATE NO. STO-11

DROP LID
TYLER NO. 6860
MUELLER NO. H-10361
BIBBY-STE-CROIX NO. B-5160

NOTES: CORE BLUE BOLTS REQUIRED FOR ALL MECHANICAL FITTINGS. ANTI-CORROSIVE COATING REQUIRED ON ALL BOLTS AND TIE ROD ASSEMBLIES.

- PROVIDE POLYWRAP AROUND ALL WATERMAIN
- 7.5' MINIMUM COVER REQUIRED OVER TOP OF WATER MAIN.
- RESTRAIN TEE AND VALVE WITH EPOXY COATED MEGALUG (OR EQUAL) THRUST RESTRAINTS.

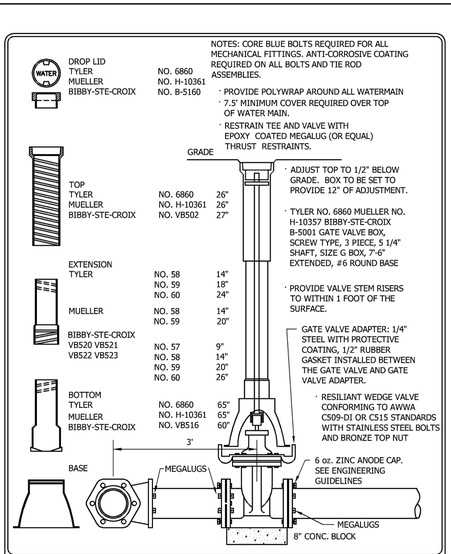

TOP		
TYLER	NO. 6860	26"
MUELLER	NO. H-10361	26"
BIBBY-STE-CROIX	NO. VB502	27"
EXTENSION		
TYLER	NO. 58	14"
	NO. 59	18"
	NO. 60	24"
MUELLER	NO. 58	14"
	NO. 59	20"
BIBBY-STE-CROIX		
VB520 VB521	NO. 57	9"
VB522 VB523	NO. 58	14"
	NO. 59	20"
	NO. 60	26"
BOTTOM		
TYLER	NO. 6860	65"
MUELLER	NO. H-10361	65"
BIBBY-STE-CROIX	NO. VB516	60"

- ADJUST TOP TO 1/2" BELOW GRADE. BOX TO BE SET TO PROVIDE 12" OF ADJUSTMENT.
- TYLER NO. 6860 MUELLER NO. H-10357 BIBBY-STE-CROIX B-5001 GATE VALVE BOX, SCREW TYPE, 3 PIECE, 5 1/4" SHAFT, SIZE G BOX, 7'-6" EXTENDED, #6 ROUND BASE
- PROVIDE VALVE STEM RISERS TO WITHIN 1 FOOT OF THE SURFACE.
- RESILIANT WEDGE VALVE CONFORMING TO AWWA C509-DI OR C515 STANDARDS WITH STAINLESS STEEL BOLTS AND BRONZE TOP NUT

GATE VALVE ADAPTER: 1/4" STEEL WITH PROTECTIVE COATING, 1/2" RUBBER GASKET INSTALLED BETWEEN THE GATE VALVE AND GATE VALVE ADAPTER.

6 oz. ZINC ANODE CAP. SEE ENGINEERING GUIDELINES

Stantec
733 Marquette Ave Suite 1000
Minneapolis, MN 55402
www.stantec.com

GATE VALVE AND BOX INSTALLATION

CHASKA, MINNESOTA

LAST REVISION: MARCH 2019

PLATE NO. WAT-1

HYDRANT MARKER WITH FLEX SPRING HYDRA/FINDER (CANDY CANE) (PROVIDE 2 PER HYDRANT DELIVER EXTRA TO CHASKA UTILITIES.)

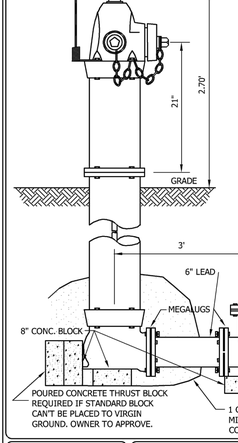

ALL HYDRANT LEAD AND PIPE JOINTS SHALL BE RESTRAINED WITH TIE RODS AND EPOXY COATED MEGALUGS.

HYDRANT SHALL BE WATEROUS PACER WB-67-250 WITH 16" TRAFFIC BREAK OFF SECTION, AND EPOXY COATED BOOT.

HYDRANT SHALL BE FOR 8.0' BURY. WATERMAIN SHALL HAVE 7'-6" OF COVER.

PROVIDE A VENTED CAP ON ONE 2 1/2" NOZZLE.

CORE BLUE BOLTS REQUIRED FOR ALL MECHANICAL FITTINGS. ANTI-CORROSIVE COATING REQUIRED ON ALL BOLTS AND TIE ROD ASSEMBLIES.

FOR VALVE BOX INSTALLATION SEE DETAIL PLATE NO. WAT-1.

RESTRAIN HYDRANT,VALVE,AND TEE WITH MEGALUG THRUST RESTRAINT (OR EQUAL)

PROVIDE POLYWRAP AROUND ALL WATERMAIN (GENERAL REQUIREMENTS) AND UP THE HYDRANT BARREL TO THE BREAK OFF FLANGE.

RESILIENT WEDGE VALVE CONFORMING TO AWWA C-509-DI STANDARDS WITH STAINLESS STEEL BOLTS AND BRONZE TOP NUT

Stantec
733 Marquette Ave Suite 1000
Minneapolis, MN 55402
www.stantec.com

WATEROUS PACER HYDRANT AND VALVE INSTALLATION

CHASKA, MINNESOTA

LAST REVISION: MARCH 2019

PLATE NO. WAT-2

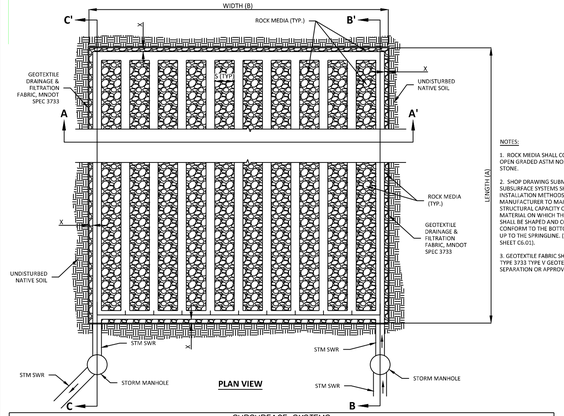

NOTES:

1. ROCK MEDIA SHALL CONSIST OF AN OPEN GRADED ASTM NO. 2 CRUSHED STONE.
2. SHOP DRAWING SUBMITTALS FOR SUBSURFACE SYSTEMS SHALL INCLUDE INSTALLATION METHODS PER PIPE MANUFACTURER TO MAINTAIN STRUCTURAL CAPACITY OF PIPES. THE SMALL ORIFICES SHALL BE DRILLED OR BEVELED AFTER PIPES ARE INSTALLED AND COMPACTED TO CONFORM TO THE BOTTOM OF THE PIPE, UP TO THE SPRINGLINE. (SEE NOTE #12 ON SHEET C6.01).
3. GEOTEXTILE FABRIC SHALL BE MNDOT TYPE 3733 TYPE V GEOTEXTILE FOR SEPARATION OR APPROVED EQUIVALENT.

SUBSURFACE SYSTEMS

BMP	TYPE OF SYSTEM	LENGTH, FT (A)	WIDTH, FT (B)	SYSTEM DEPTH, FT (C)	PIPE COVER, IN (D)	PIPE SIZE, IN (E)	ROWS (F)	PIPE INVERT (G)	BOTTOM OF ROCK (H)	EDGE SPACING, IN (X)	PIPE SPACING, IN (S)	TOTAL STORAGE (CF)
1P	PERF. CMP PIPE	184.00	90.00	5.00	6.0	48	15	937.50	937.00	12.0	24.0	34306.0

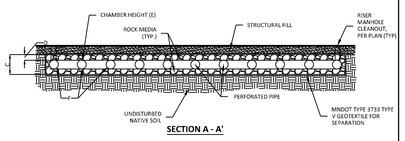

SECTION A - A'

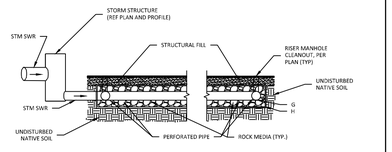

SECTION B - B'

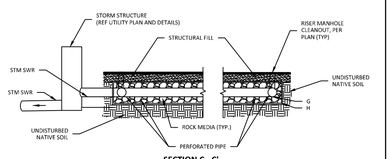

SECTION C - C'

NO	DATE	BY	CKD	APPR	COMMENT
	05/03/2022				Final Site and Building Plan Application

I hereby certify that this plan, specification, or report was prepared by me or under my direct supervision and that I am a duly Licensed Professional Engineer under the laws of the State of Minnesota.

Print Name: Brian W. Frank

Date _____ License # _____

PRELIMINARY

DESIGN REVIEW

PERMIT SUBMITTAL

CONSTRUCTION DOCUMENTS

DRAWN BY KLS

DESIGNED BY

CHECKED BY

PROJECT NO. 50521

Sambatek
www.sambatek.com
Engineering | Surveying | Planning | Environmental

DETAILS

AV DEVELOPMENT, LLC
CLOVER RIDGE APARTMENTS

CHASKA, MINNESOTA

SHEET C9.01
9 OF 10
REV.

C:\Users\alea.stutz\Desktop\LMS TECH\50521_CLOVER RIDGE APARTMENTS_LMS_alea.stutz@sambatek.com.rvt

J:\PROJECTS\50521\CAD\CIVIL\SHEETS\50521-C9-DETAILS.DWG:C9.01 | 5/3/2022 9:11:11 AM | ALEA.STUTZ

© 2021 Sambatek

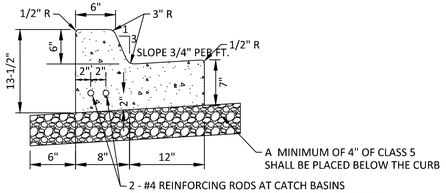

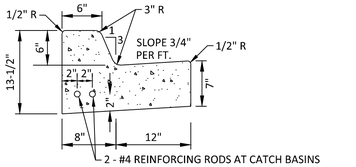

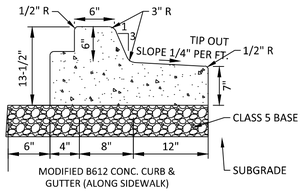

01 B612 CONCRETE CURB & GUTTER
N.T.S.

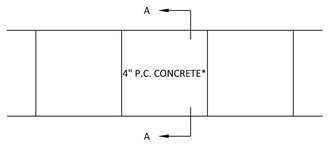

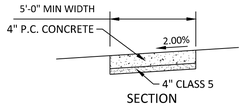

SECTION
A-A

GENERAL NOTES FOR CONCRETE CONSTRUCTION:

1. THE CONCRETE SIDEWALKS SHALL BE CONSTRUCTED IN ACCORDANCE WITH THE REQUIREMENTS OF MN/DOT "STANDARD SPECIFICATIONS FOR CONSTRUCTION".
2. SIDEWALK CONTROL JOINTS SHALL BE LOCATED AT 5 FEET ON CENTER. SIDEWALK EXPANSION JOINTS SHALL BE LOCATED AT A MAXIMUM OF 100 FEET ON CENTER, AND WHERE SIDEWALK ABUTS CURB, STRUCTURES, AND OTHER FIXED OBJECTS. SEAL ALL EXPANSION JOINTS. BROOM FINISH SHALL BE PERPENDICULAR TO THE LINE OF TRAFFIC.

*THE THICKNESS SHALL BE INCREASED TO A MINIMUM DEPTH OF __ INCHES AT DRIVEWAY CROSSINGS.

02 CONCRETE SIDEWALK
N.T.S.

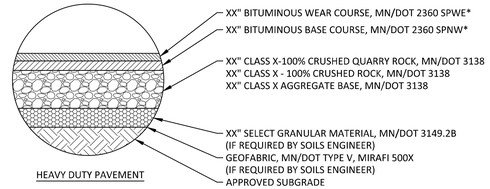

HEAVY DUTY PAVEMENT

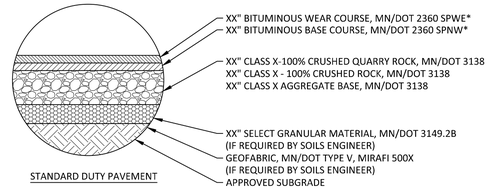

STANDARD DUTY PAVEMENT

* REFER TO BITUMINOUS MIX DESIGN REQUIREMENT PROVIDED BY THE GEOTECHNICAL CONSULTANT

NOTES:
1. THE PAVEMENT SECTIONS SHALL BE CONSTRUCTED IN ACCORDANCE WITH MNDOT "STANDARD SPECIFICATION FOR CONSTRUCTION", AND ALSO THE REQUIREMENTS OF THE OWNER'S GEOTECHNICAL CONSULTANT.
2. ALL THICKNESSES, AS SPECIFIED, ARE TO BE CONSIDERED MINIMUM DEPTHS, AFTER COMPACTION.
3. MN/DOT SPEC. 2357 BITUMINOUS TACK COAT SHALL BE PLACED BETWEEN SUCCESSIVE BITUMINOUS LIFTS AND AGAINST ABUTTING CONCRETE CURB EDGES.

03 PAVEMENT SECTIONS
N.T.S.

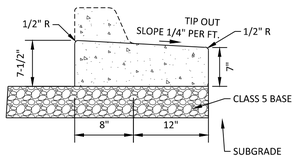

06 B612 FLAT CURB & GUTTER
N.T.S.

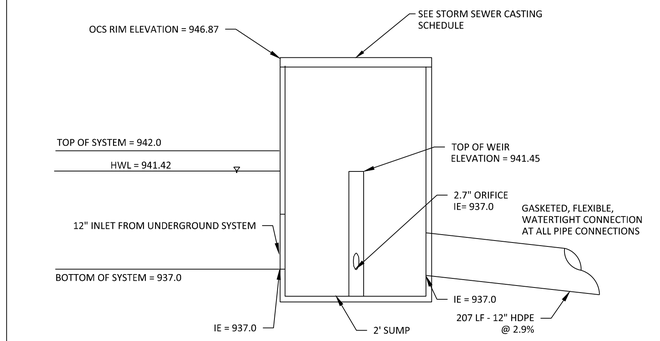

UNDERGROUND DETENTION PIPE OUTLET CONTROL STRUCTURE DETAIL/CROSS SECTION
N.T.S.

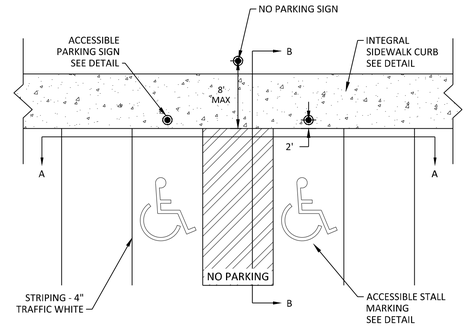

PLAN VIEW OF ADA PARKING

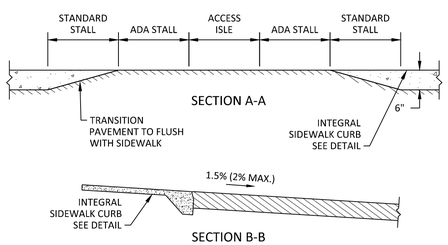

SECTION A-A

SECTION B-B

04 ADA PARKING
N.T.S.

05 BREAKAWAY ACCESSIBLE PARKING SIGN
N.T.S.

SITE SPECIFIC DATA*

PROJECT NUMBER	
PROJECT NAME	
PROJECT LOCATION	
STRUCTURE ID	
WATER QUALITY FLOW RATE (CFS)	
PEAK FLOW RATE (CFS)	
PEAK STORM DURATION (YEARS)	

PIPE DATA	I.E.	MATERIAL	DIAMETER
INLET PIPE 1			
OUTLET PIPE 1			
RIM ELEVATION			

SURFACE LOADING REQUIREMENT	
FRAME AND COVER	#30"
CORROSIVE SOIL CONDITIONS	
KNOWN GROUNDWATER ELEVATION	
NOTES:	

*PER ENGINEER OF RECORD

WP PERFORMANCE DATA

TREATMENT FLOW RATE (CFS)	0.60
MEDIA SURFACE AREA (SF)	25
LOADING RATE (GPM/SF)	–
SEDIMENT STORAGE CAPACITY (CF)	90.50

WP STORAGE CAPACITIES

SEDIMENT CHAMBER CAPACITY	LENGTH (FT)	WIDTH (FT)	HEIGHT (FT)	TOTAL (CF)
CHAMBER 1	3.25	5.00	3.44	55.90
CHAMBER 2	6.92	5.00	1.00	34.60

GENERAL NOTES

1. BIO CLEAN TO PROVIDE ALL MATERIALS UNLESS OTHERWISE NOTED.
2. ALL DIMENSIONS, ELEVATIONS, SPECIFICATIONS, AND CAPACITIES ARE SUBJECT TO CHANGE. FOR PROJECT SPECIFIC DRAWINGS DETAILING EXACT DIMENSIONS, WEIGHTS, AND ACCESSORIES PLEASE CONTACT BIO CLEAN.

INSTALLATION NOTES

1. CONTRACTOR TO PROVIDE ALL LABOR, EQUIPMENT, MATERIALS, AND INCIDENTALS REQUIRED TO OFFLOAD AND INSTALL THE NSBB UNIT AND APPURTENANCES IN ACCORDANCE WITH THIS DRAWING AND THE MANUFACTURERS SPECIFICATIONS, UNLESS OTHERWISE STATED IN MANUFACTURERS CONTRACT.
2. MANUFACTURER RECOMMENDS A 6"–12" LEVEL ROCK BASE UNLESS SPECIFIED BY THE PROJECT ENGINEER. CONTRACTOR IS RESPONSIBLE TO VERIFY PROJECT ENGINEERS RECOMMENDED BASE SPECIFICATIONS.
3. ALL PIPES MUST BE FLUSH WITH INSIDE SURFACE OF CONCRETE. (PIPES CANNOT INTRUDE BEYOND FLUSH).
4. ALL GAPS AROUND PIPES SHALL BE SEALED WATER TIGHT WITH A NON–SHRINK GROUT PER MANUFACTURERS STANDARD CONNECTION DETAIL AND SHALL MEET OR EXCEED REGIONAL PIPE CONNECTION STANDARDS.
5. CONTRACTOR RESPONSIBLE FOR INSTALLATION OF ALL RISERS, MANHOLES, AND HATCHES. ALL COVERS SHALL BE SHIPPED LOOSE. CONTRACTOR TO GROUT ALL MANHOLES AND HATCHES TO MATCH FINISHED SURFACE UNLESS SPECIFIED OTHERWISE.

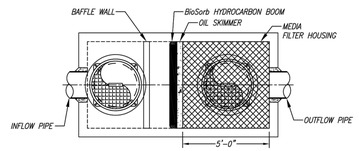

PLAN VIEW
NTS

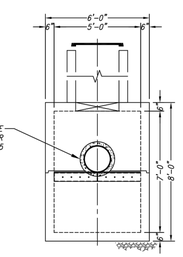

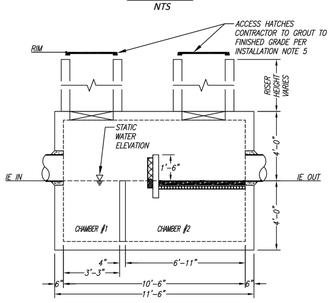

END VIEW
NTS

ELEVATION VIEW
NTS

PROPRIETARY AND CONFIDENTIAL:
THE INFORMATION CONTAINED IN THIS DRAWING IS THE SOLE PROPERTY OF BIO CLEAN ENVIRONMENTAL SERVICES, INC. ANY REPRODUCTION IN PART OR AS A WHOLE WITHOUT THE WRITTEN PERMISSION OF BIO CLEAN ENVIRONMENTAL SERVICES, INC. IS PROHIBITED.

BIO CLEAN ENVIRONMENTAL SERVICES, INC.
biocleanenvironmental.com
P 760.433.7640 F 760.433.3176

WP-5-10.5
WATER POLISHER-UP FLOW MEDIA FILTER
STANDARD DETAIL

NO	DATE	BY	CKD	APPR	COMMENT
	05/03/2022				Final Site and Building Plan Application

I hereby certify that this plan, specification, or report was prepared by me or under my direct supervision and that I am a duly Licensed Professional Engineer under the laws of the State of Minnesota.

Print Name: Brian W. Frank

Date _____ License # _____

PRELIMINARY
DESIGN REVIEW
PERMIT SUBMITTAL
CONSTRUCTION DOCUMENTS

DRAWN BY KLS
DESIGNED BY
CHECKED BY
PROJECT NO. 50521

Sambatek
www.sambatek.com
Engineering | Surveying | Planning | Environmental

DETAILS

AV DEVELOPMENT, LLC
CLOVER RIDGE APARTMENTS

CHASKA, MINNESOTA

SHEET
C9.02
10 OF 10
REV.

© 2021 Sambatek

I:\PROJECTS\50521\CADCIVIL\SHEETS\50521-C9-DETAILS.DWG;C9.02 | 5/3/2022 9:11:11 AM | ALEA STUTZ | 2022.05 (LMS TECH)

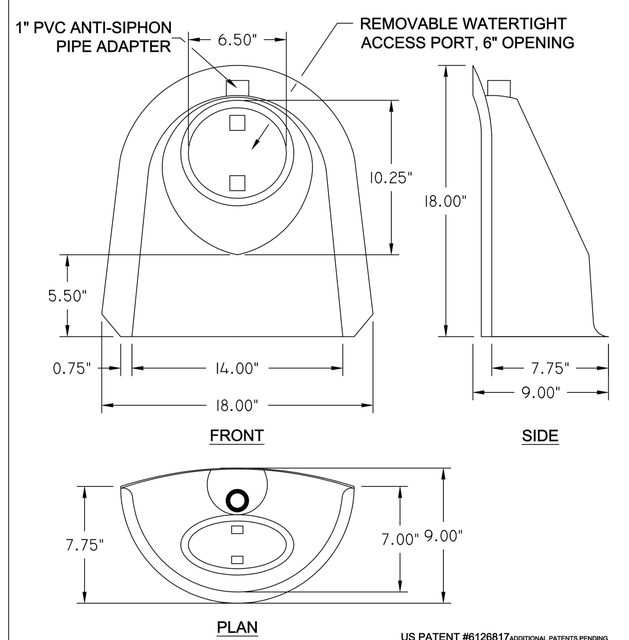

DESIGNED TO FIT 36"-48" DIAM. STRUCTURES

US PATENT #6126817 ADDITIONAL PATENTS PENDING

BMP, INC.
53 MT. ARCHER ROAD, LYME, CT. 06371
(800) 504-8008 FAX: (860)434-3195

DESCRIPTION	DATE	SCALE
12R SNOUT OIL & DEBRIS STOP	09/09/99	NONE
	DRAWING NUMBER 12R	

CONFIGURATION DETAIL

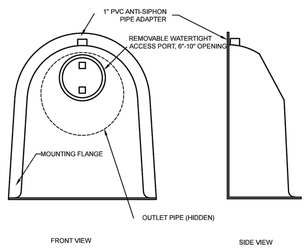

SNOUT OIL-WATER-DEBRIS SEPARATOR

TYPICAL INSTALLATION

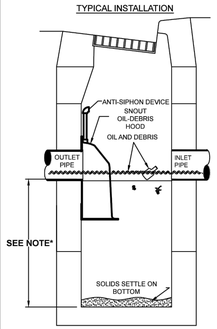

*NOTE- SUMP DEPTH OF 36" MIN. FOR UP TO 12" ID PIPE OUTLET. FOR PIPES 15" ID AND ABOVE SUMP DEPTH OF 2.5 TO 3 TIMES PIPE ID RECOMMENDED (E.G. 5' DEEP for 24" PIPE)

NOTES:

1. ALL HOODS AND TRAPS FOR CATCH BASINS AND WATER QUALITY STRUCTURES SHALL BE AS MANUFACTURED BY:
   BEST MANAGEMENT PRODUCTS, INC.
   9 MATHEWS DRIVE, UNIT A-1-A2.
   EAST HADDAM, CT 06423
   TOLL FREE: (800) 504-8008 OR (888) 434-0277, FAX: (877) 434-3197
   WEB SITE: www.bmpinc.com
   OR PRE-APPROVED EQUAL
2. ALL HOODS SHALL BE CONSTRUCTED OF A GLASS REINFORCED RESIN COMPOSITE WITH ISO GEL COAT EXTERIOR FINISH WITH A MINIMUM 0.125" LAMINATE THICKNESS.
3. ALL HOODS SHALL BE EQUIPPED WITH A WATERTIGHT ACCESS PORT, A MOUNTING FLANGE, AND AN ANTI-SIPHON VENT PIPE AND ELBOW AS DRAWN. (SEE CONFIGURATION DETAIL)
4. THE SIZE AND POSITION OF THE HOOD SHALL BE DETERMINED BY OUTLET PIPE SIZE AS PER MANUFACTURER'S RECOMMENDATION (SNOUT SIZE ALWAYS LARGER THAN PIPE SIZE).
5. THE BOTTOM OF THE HOOD SHALL EXTEND DOWNWARD A MINIMUM DISTANCE EQUAL TO 1/2 THE OUTLET PIPE DIAMETER WITH A MINIMUM DISTANCE OF 6" FOR PIPES <12" I.D.
6. THE ANTI-SIPHON VENT SHALL EXTEND ABOVE HOOD BY MINIMUM OF 3" AND A MAXIMUM OF 12" ACCORDING TO STRUCTURE CONFIGURATION.
7. THE SURFACE OF THE STRUCTURE WHERE THE HOOD IS MOUNTED SHALL BE FINISHED SMOOTH AND FREE OF LOOSE MATERIAL AND PIPE SHALL BE FINISHED FLUSH TO WALL.
8. ALL STRUCTURE JOINTS SHALL BE WATERTIGHT.
9. THE HOOD SHALL BE SECURELY ATTACHED TO STRUCTURE WALL WITH ⅜" STAINLESS STEEL BOLTS AND OIL-RESISTANT GASKET AS SUPPLIED BY MANUFACTURER. (SEE INSTALLATION DETAIL)
10. INSTALLATION INSTRUCTIONS SHALL BE FURNISHED WITH MANUFACTURER SUPPLIED INSTALLATION KIT.
    INSTALLATION KIT SHALL INCLUDE:
    A. INSTALLATION INSTRUCTIONS
    B. PVC ANTI-SIPHON VENT PIPE AND ADAPTER
    C. OIL-RESISTANT CRUSHED CELL FOAM GASKET WITH PSA BACKING
    D. 3/8" STAINLESS STEEL BOLTS
    E. ANCHOR SHIELDS

US Patent # 6126817, 7951294, 7857966, 8512556
Canada Patent # 2285146, 2690156, 2690156 others pending

INSTALLATION DETAIL

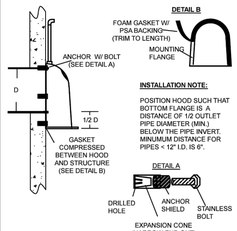

HOOD SPECIFICATION FOR CATCH BASINS AND WATER QUALITY STRUCTURES

DESCRIPTION	DATE	SCALE
OIL- DEBRIS HOOD SPECIFICATION AND INSTALLATION (TYPICAL)	09/08/18	NONE
	DRAWING NUMBER SP-SN	

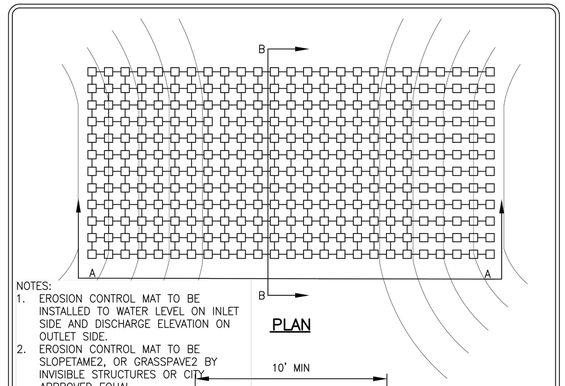

NOTES:
1. EROSION CONTROL MAT TO BE INSTALLED TO WATER LEVEL ON INLET SIDE AND DISCHARGE ELEVATION ON OUTLET SIDE.
2. EROSION CONTROL MAT TO BE SLOPETAME2, OR GRASSPAVE2 BY INVISIBLE STRUCTURES OR CITY APPROVED EQUAL

POND SPILLWAY TURF REINFORCEMENT

N.T.S.

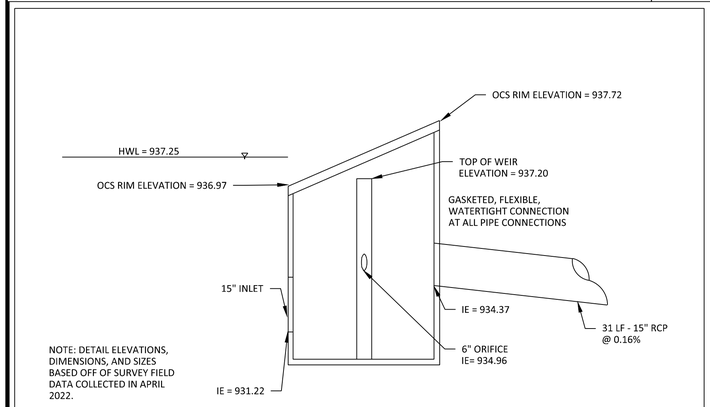

EXISTING STORMWATER POND OUTLET CONTROL STRUCTURE DETAIL

N.T.S.

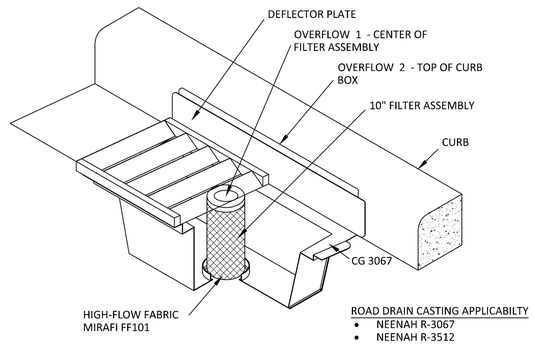

ROAD DRAIN CASTING APPLICABILTY
- NEENAH R-3067
- NEENAH R-3512

ROAD DRAIN INLET PROTECTION (IP-2)

NOT TO SCALE

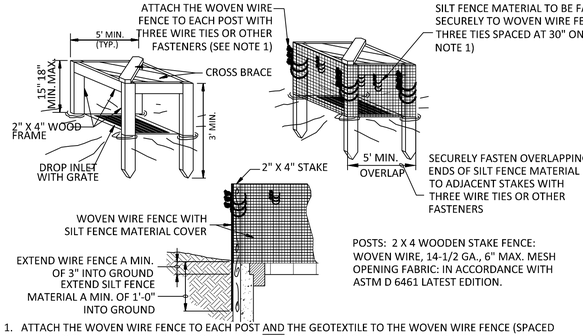

1. ATTACH THE WOVEN WIRE FENCE TO EACH POST AND THE GEOTEXTILE TO THE WOVEN WIRE FENCE (SPACED EVERY 30") WITH THREE WIRE TIES OR OTHER FASTENERS, ALL SPACED WITHIN THE TOP 8" OF THE FABRIC. ATTACH EACH TIE DIAGONALLY 45 DEGREES THROUGH THE FABRIC, WITH EACH PUNCTURE AT LEAST 1" VERTICALLY APART.
2. WHEN TWO SECTIONS OF SILT FENCE MATERIAL ADJOIN EACH OTHER, THEY SHALL BE OVERLAPPED ACROSS TWO POSTS.
3. MAINTENANCE SHALL BE PERFORMED AS NOTED IN THE SWPPP. DEPTH OF ACCUMULATED SEDIMENTS MAY NOT EXCEED ONE-HALF THE HEIGHT OF THE FABRIC. MAINTENANCE CLEANOUT MUST BE CONDUCTED REGULARLY TO PREVENT ACCUMULATED SEDIMENTS FROM REACHING ONE-HALF THE HEIGHT OF THE SILT FENCE MATERIAL ABOVE GRADE.
4. ALL SILT FENCE INLETS SHALL INCLUDE WIRE SUPPORT.

SILT FENCE INLET PROTECTION (IP-1)

NOT TO SCALE

NO	DATE	BY	CKD	APPR	COMMENT
	05/03/2022				Final Site and Building Plan Application

I hereby certify that this plan, specification, or report was prepared by me or under my direct supervision and that I am a duly Licensed Professional Engineer under the laws of the State of Minnesota.

Print Name: Brian W. Frank

Date _____ License # _____

PRELIMINARY | DESIGN REVIEW | PERMIT SUBMITTAL | CONSTRUCTION DOCUMENTS

DRAWN BY KLS | DESIGNED BY | CHECKED BY | PROJECT NO. 50521

Sambatek
www.sambatek.com
Engineering | Surveying | Planning | Environmental

DETAILS

AV DEVELOPMENT, LLC
CLOVER RIDGE APARTMENTS

CHASKA, MINNESOTA

SHEET C9.03 10 OF 10 REV.

© 2021 Sambatek

C:\PROJECTS\50521\CAD\CIVIL\SHEETS\50521-C9-DETAILS.DWG|C9.03 | 5/3/2022 9:11:11 AM | ALEA STUTZ | DWG TO PDF.PC5 (LMS TECH)

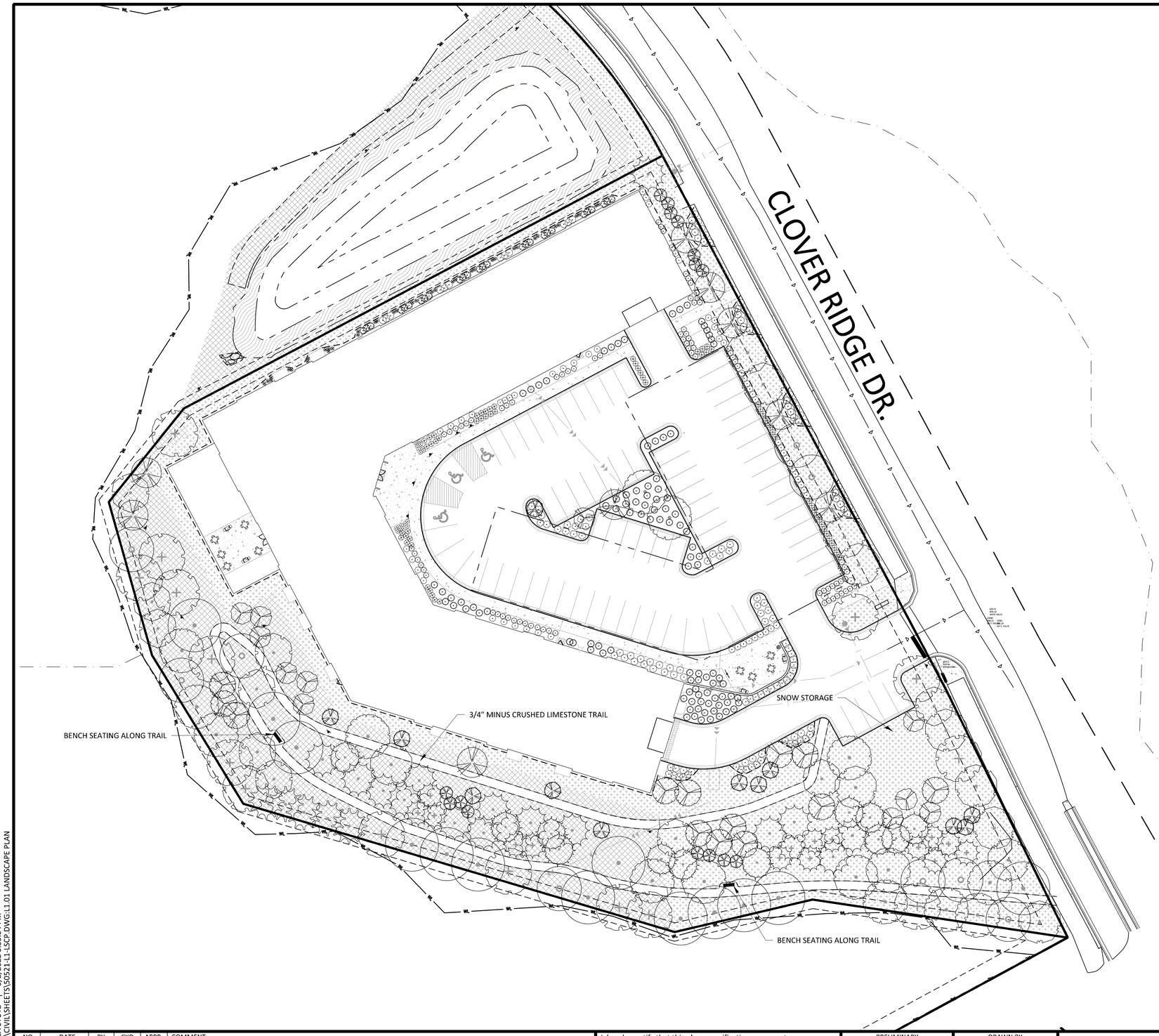

LEGEND

	PROPOSED	EXISTING
PROPERTY LIMIT		
CURB & GUTTER		
EASEMENT		
BUILDING		
RETAINING WALL		
WETLAND LIMITS		WL
TREELINE		
LANDSCAPE EDING		
STORM SEWER	D	
SANITARY SEWER	S	
FORCEMAIN (SAN.)	LS FM	S
WATERMAIN		
YARDDRAIN		
LIMITS OF DISTURBANCE		

STANDARD DUTY ASPHALT PAVING
CONCRETE PAVING
CONCRETE SIDEWALK
TREE PROTECTION FENCE — TP
TREE TO BE REMOVED
SIGN
PIPE BOLLARD
RIPRAP

CHASKA LANDSCAPE CODE

1. Total Caliper Inches of Overstory Trees Required. In order to achieve landscaping which is appropriate in scale with the size of a building site, the minimum number of caliper inches of overstory trees required shall be determined by dividing the total gross square footage of all floors of a building by 320.
2. Understory Trees and Shrubs. In addition to the required number of overstory trees listed above, a full complement of understory trees and shrubs shall be provided to complete a quality landscape treatment of the site. A minimum number of understory trees and shrubs are required as follows:
   - 2.1. The number of understory trees shall be equal to twenty-five (25) percent of the required number of overstory trees; and
   - 2.2. The number of shrubs shall be equal to one (1) shrub per thirty (30) feet of site perimeter or one (1) shrub per three-hundred (300) square feet of building footprint, whichever is greater.
3. For the purpose of satisfying the total caliper inch requirement, coniferous trees can be considered equivalent to overstory trees by dividing the height of a coniferous tree's six (6) foot height minimum by 2.4 to determine equivalent caliper inches.

TOTAL NUMBER OF STORIES ON BUILDING: 4

TOTAL CALIPER INCHES REQUIRED: 442"

CALCULATIONS	INCHES REQUIRED	INCHES PROPOSED	TREES PROPOSED
2.5" CAL. OVERSTORY TREES REQUIRED(40%)	176.8	177.5	71
3" CAL. OVERSTORY TREES REQUIRED(20%)	88.4	90	30
3.5" CAL. OVERSTORY TREES REQUIRED(10%)	44.2	45.5	13
4" CAL. OVERSTORY TREES REQUIRED(10%)	44.2	44	11
4.5" CAL. OVERSTORY TREES REQUIRED(10%)	44.2	45	10
5" CAL. OVERSTORY TREES REQUIRED(10%)	44.2	45	9
UNDERSTORY TREES REQUIRED		36	36
SHRUBS REQUIRED		471	471

	REQUIRED	PROPOSED
LANDSCAPE ISLAND CALCULATION (5,475SF / 37,223SF)	10%	14%

OPEN SPACE CALCULATION
BALCONIES (2,560 SF)
OPEN SPACE A,B,AND C (43,252 SF)

TOTAL (CALCULATION: 45,812 SF/ 163,501 SF)	15% (24,525 SF)	28% (45,812 SF)

PLANT SCHEDULE

PLANT SCHEDULE

TREES	CODE	BOTANICAL / COMMON NAME	CONT	CAL	SIZE	QTY
	AB	Acer freemanii 'Autumn Blaze' / Autumn Blaze Maple	B & B	3" Cal		9
	SG	Acer freemanii 'Sienna Glen' / Sienna Glen Maple	B & B	3.5" Cal.		13
	WS	Betula papyrifera 'Whitespire' / Whitespire Birch	B & B	2.5"Cal		9
	HL	Gleditsia triacanthos 'Skyline' / Skyline Honey Locust	B & B	3"Cal.		15
	KC	Gymnocladus dioica 'Espresso' / Kentucky Coffeetree	B & B	4.5" CAL.		10
	SO	Quercus bicolor / Swamp White Oak	B & B	3"Cal.		15
	BL	Tilia americana 'Boulevard' / Boulevard Linden	B & B	4"CAL		11
CONIFERS	CODE	BOTANICAL / COMMON NAME	CONT	CAL	SIZE	QTY
	BF	Abies balsamea / Balsam Fir	B & B		6'	15
	LA	Larix laricina / Tamarack	B & B		6'	5
	NS	Picea abies / Norway Spruce	B & B		6'	12
	BS	Picea glauca densata / Black Hills Spruce	B & B		6'	15
	PW	Pinus strobus 'Fastigiata' / Pyramidal White Pine	B & B		6'	75
ORN. TREES	CODE	BOTANICAL / COMMON NAME	CONT	CAL	SIZE	QTY
	SB	Amelanchier canadensis 'Autumn Brilliance' / Autumn Brilliance Serviceberry	B & B	3"Cal		11
	RE	Cercis canadensis / Eastern Redbud	B & B	3"Cal		12
	IL	Syringa reticulata 'Ivory Silk' / Ivory Silk Japanese Tree Lilac	B & B	3"Cal		13
SHRUBS	CODE	BOTANICAL / COMMON NAME	CONT			
	CD	Cornus sericea 'Alleman's Compact' / Dwarf Red Twig Dogwood	5 gal			12
	BK	Diervilla lonicera / Dwarf Bush Honeysuckle	5 gal			62
	LH	Hydrangea paniculata 'Jane' / Little Lime Hydrangea	5 gal			73
	CJ	Juniperus sabina 'Monna' / Calgary Carpet Juniper	5 gal			96
	PM	Pinus mugo 'Slowmound' / Mugo Pine	5 gal			28
	PT	Potentilla fruticosa 'Fargo' TM / Fargo Potentilla	5 gal			78
	CL	Rhus aromatica 'Gro-Low ' / Gro-Low Fragrant Sumac	5 gal			52
	GS	Spiraea japonica 'Goldflame' / Spirea	5 gal			27
	TAX	Taxus x media 'Dark Green Pyramidalis' / Dark Green Pyramidal Anglojap Yew	5 gal			27
	HA	Thuja occidentalis 'Holmstrup' / Holmstrup Cedar	10 gal			6
PERENNIALS	CODE	BOTANICAL / COMMON NAME	CONT			
	SBA	Allium x 'Summer Beauty' / Summer Beauty Allium	1 gal			17
	VRA	Astilbe chinensis 'Visions In Red' / Chinese Astilbe	1 gal			38
GROUND COVERS	CODE	BOTANICAL / COMMON NAME	CONT			
	33-261	MNDOT Seed Mix 33-261 / Ponds and Wet Areas	Seed			
	34-262	MNDOT Seed mix 34-262 / Wet Prairie	Seed			
	TUR HGL	Turf Sod Highland Sod / Sod	Sod			

NORTH
0 30 60
SCALE IN FEET

NO	DATE	BY	CKD	APPR	COMMENT
	05/03/2022				Final Site and Building Plan Application

I hereby certify that this plan, specification, or report was prepared by me or under my direct supervision and that I am a duly Licensed Landscape Architect under the laws of the State of Minnesota.

Print Name: Johnnie R. Workman

Date _____ License # _____

PRELIMINARY
DESIGN REVIEW
PERMIT SUBMITTAL
CONSTRUCTION DOCUMENTS

DRAWN BY
DESIGNED BY
CHECKED BY
PROJECT NO. 50521

Sambatek
www.sambatek.com
Engineering | Surveying | Planning | Environmental

LANDSCAPE PLAN
AV DEVELOPMENT, LLC
CLOVER RIDGE APARTMENTS
CHASKA, MINNESOTA

SHEET
L1.01
3 OF 10
REV.

© 2021 Sambatek

C:\PROJECTS\50521\CAD\CIVIL\SHEETS\50521-L1-LSCP.DWG;L1.01 LANDSCAPE PLAN 5/2/2022 3:33:34 PM ALEA STUTZ (LMS TECH)

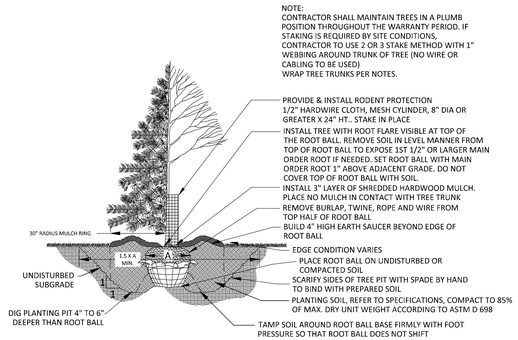

1 C3.01 TREE PLANTING DETAIL

1/4" = 1'-0" P-01

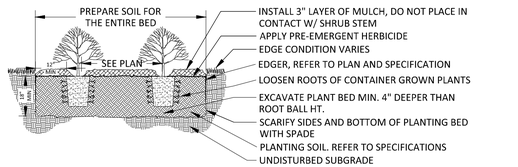

2 C3.01 SHRUB PLANTING DETAIL

3/8" = 1'-0" P-02

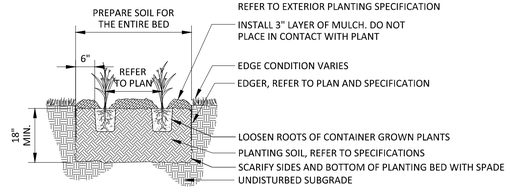

3 C3.01 PERENNIAL PLANTING DETAIL

1/2" = 1'-0" P-03

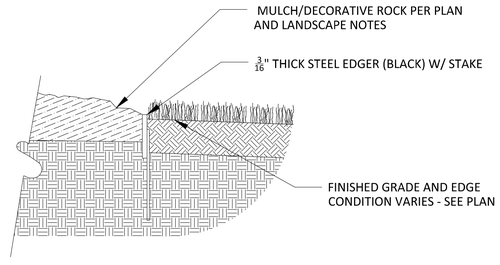

4 C3.01 STEEL EDGER

1 1/2" = 1'-0" P-06

NOTES

GENERAL NOTES:

1. THE CONTRACTOR SHALL INSPECT THE SITE AND BECOME FAMILIAR WITH THE EXISTING CONDITIONS RELATING TO THE NATURE AND SCOPE OF THE WORK.
2. THE CONTRACTOR SHALL VERIFY PLAN LAYOUT AND BRING TO THE ATTENTION OF THE LANDSCAPE ARCHITECT DISCREPANCIES WHICH MAY COMPROMISE THE DESIGN OR INTENT OF THE LAYOUT.
3. THE CONTRACTOR SHALL BE RESPONSIBLE FOR COMPLYING WITH ALL APPLICABLE CODES, REGULATIONS, AND PERMITS GOVERNING THE WORK.
4. THE CONTRACTOR SHALL PROTECT EXISTING ROADS, CURBS/GUTTERS, TRAILS, TREES, LAWNS AND SITE ELEMENTS DURING CONSTRUCTION. DAMAGE TO SAME SHALL BE REPAIRED AND/OR REPLACED AT NO ADDITIONAL COST TO THE OWNER.
5. LOCATE AND VERIFY ALL UTILITIES, INCLUDING IRRIGATION LINES, WITH THE OWNER FOR PROPRIETARY UTILITIES AND GOPHER STATE ONE CALL 48 HOURS BEFORE DIGGING. CONTRACTOR SHALL BE RESPONSIBLE FOR THE PROTECTION AND REPAIR OF ANY DAMAGES TO SAME. NOTIFY THE LANDSCAPE ARCHITECT OF ANY CONFLICTS TO FACILITATE PLANT RELOCATION.
6. **THE LANDSCAPE CONTRACTOR SHALL COORDINATE THE PHASES OF CONSTRUCTION AND PLANTING INSTALLATION WITH OTHER CONTRACTORS WORKING ON SITE.**
7. THE CONTRACTOR SHALL REVIEW THE SITE FOR DEFICIENCIES IN SITE CONDITIONS WHICH MIGHT NEGATIVELY AFFECT PLANT ESTABLISHMENT, SURVIVAL OR WARRANTY. UNDESIRABLE SITE CONDITIONS SHALL BE BROUGHT TO THE ATTENTION OF THE LANDSCAPE ARCHITECT PRIOR TO BEGINNING OF WORK.
8. THE PLAN TAKES PRECEDENCE OVER THE LANDSCAPE LEGEND IF DISCREPANCIES EXIST. QUANTITIES SHOWN IN THE PLANTING SCHEDULE ARE FOR THE CONTRACTOR'S CONVENIENCE. CONTRACTOR TO VERIFY QUANTITIES SHOWN ON THE PLAN.
9. THE SPECIFICATIONS TAKE PRECEDENCE OVER THE PLANTING NOTES AND GENERAL NOTES.
10. EXISTING TREES AND SHRUBS TO REMAIN SHALL BE PROTECTED TO THE DRIP LINE FROM ALL CONSTRUCTION TRAFFIC, STORAGE OF MATERIALS ETC. WITH 4' HT. ORANGE PLASTIC SAFETY FENCING ADEQUATELY SUPPORTED BY STEEL FENCE POSTS 6' O.C. MAXIMUM SPACING.
11. LONG-TERM STORAGE OF MATERIALS OR SUPPLIES ON-SITE WILL NOT BE ALLOWED.
12. CONTRACTOR SHALL REQUEST IN WRITING, A FINAL ACCEPTANCE INSPECTION.

PLANTING NOTES:

1. NO PLANTS SHALL BE INSTALLED UNTIL FINAL GRADING AND CONSTRUCTION HAS BEEN COMPLETED IN THE IMMEDIATE AREA.
2. A GRANULAR PRE-EMERGENT HERBICIDE SHALL BE APPLIED TO ALL PLANT BEDS AT THE MANUFACTURERS RECOMMENDED RATE PRIOR TO PLANT INSTALLATION.
3. ALL PLANTING STOCK SHALL CONFORM TO THE "AMERICAN STANDARD FOR NURSERY STOCK," ANSI-Z60, LATEST EDITION, OF THE AMERICAN ASSOCIATION OF NURSERYMEN, INC. AND SHALL CONSTITUTE MINIMUM QUALITY REQUIREMENTS FOR PLANT MATERIALS.
4. OVERSTORY TREES SHALL BEGIN BRANCHING NO LOWER THAN 6' ABOVE PAVED SURFACES.
5. ALL PLANTS MUST BE HEALTHY, VIGOROUS MATERIAL, FREE OF PESTS AND DISEASE AND BE CONTAINER GROWN OR BALLED AND BURLAPPED AS INDICATED IN THE LANDSCAPE LEGEND.
6. PLANT MATERIALS TO BE INSTALLED PER PLANTING DETAILS.
7. ALL TREES MUST BE STRAIGHT TRUNKED AND FULL HEADED AND MEET ALL REQUIREMENTS SPECIFIED.
8. THE LANDSCAPE ARCHITECT RESERVES THE RIGHT TO REJECT ANY PLANTS WHICH ARE DEEMED UNSATISFACTORY BEFORE, DURING, OR AFTER INSTALLATION.
9. NO SUBSTITUTIONS OF PLANT MATERIAL SHALL BE ACCEPTED UNLESS APPROVED IN WRITING BY THE LANDSCAPE ARCHITECT.
10. ALL PLANT MATERIAL QUANTITIES, SHAPES OF BEDS AND LOCATIONS SHOWN ARE APPROXIMATE. CONTRACTOR SHALL BE RESPONSIBLE FOR COMPLETE COVERAGE OF ALL PLANTING BEDS AT SPACING SHOWN AND ADJUSTED TO CONFORM TO THE EXACT CONDITIONS OF THE SITE. THE LANDSCAPE ARCHITECT SHALL APPROVE THE STAKING LOCATION OF ALL PLANT MATERIALS PRIOR TO INSTALLATION.
11. ALL PLANTING AREAS MUST BE COMPLETELY MULCHED AS SPECIFIED.
12. MULCH: DOUBLE SHREDDED HARDWOOD MULCH, CLEAN AND FREE OF NOXIOUS WEEDS OR OTHER DELETERIOUS MATERIAL, IN ALL MASS PLANTING BEDS AND FOR TREES, UNLESS INDICATED AS ROCK MULCH ON DRAWINGS. SUBMIT SAMPLE TO LANDSCAPE ARCHITECT PRIOR TO DELIVERY ON-SITE FOR APPROVAL. DELIVER MULCH ON DAY OF INSTALLATION. USE 3" FOR SHRUB BEDS, TREE RINGS, AND 3" FOR PERENNIAL/GROUND COVER BEDS, UNLESS OTHERWISE DIRECTED.
13. BUILDING MAINTENANCE STRIP: WHERE NO LANDSCAPE PLANTING BEDS EXIST ADJACENT TO A BUILDING FOUNDATION, CONTRACTOR SHALL INSTALL A DECORATIVE ROCK MAINTENANCE STRIP PER PLAN. DECORATIVE ROCK SHALL BE 1"-3" DRESSER TRAP ROCK, GREY IN COLOR.
14. THE CONTRACTOR SHALL BE RESPONSIBLE FOR ALL MULCHES AND PLANTING SOIL QUANTITIES TO COMPLETE THE WORK SHOWN ON THE PLAN.
15. USE ANTI-DESICCANT (WILTPRUF OR APPROVED EQUAL) ON DECIDUOUS PLANTS MOVED IN LEAF AND FOR EVERGREENS MOVED ANYTIME. APPLY AS PER MANUFACTURER'S INSTRUCTION. ALL EVERGREENS SHALL BE SPRAYED IN THE LATE FALL FOR WINTER PROTECTION DURING WARRANTY PERIOD.
16. WRAP ALL SMOOTH-BARKED DECIDUOUS TREES PLANTED IN THE FALL PRIOR TO DECEMBER 1 AND REMOVE WRAPPING AFTER MAY 1. TREE WRAPPING MATERIAL SHALL BE WHITE TWO-WALLED PLASTIC SHEETING APPLIED FROM TRUNK FLARE TO THE FIRST BRANCH.
17. ALL DECIDUOUS, PINE, AND LARCH PLANTINGS SHALL RECEIVE RODENT PROTECTION PER MNDOT 2571.31.2
18. PLANTING SOIL FOR TREES, SHRUBS AND GROUND COVERS: FERTILE FRIABLE LOAM CONTAINING A LIBERAL AMOUNT (4% MIN.) OF HUMUS AND CAPABLE OF SUSTAINING VIGOROUS PLANT GROWTH. IT SHALL COMPLY WITH MNDOT SPECIFICATION 3877 TYPE B SELECT TOPSOIL. MIXTURE SHALL BE FREE FROM HARDPACK SUBSOIL, STONES, CHEMICALS, NOXIOUS WEEDS, ETC. SOIL MIXTURE SHALL HAVE A PH BETWEEN 6.1 AND 7.5 AND 10-0-10 FERTILIZER AT THE RATE OF 3 POUNDS PER CUBIC YARD. IN PLANTING BEDS INCORPORATE THIS MIXTURE THROUGHOUT THE ENTIRE BED IN A 6" LAYER AND ROTO-TILLING IT INTO THE TOP 12" OF SOIL AT A 1:1 RATIO.ANY PLANT STOCK NOT PLANTED ON DAY OF DELIVERY SHALL BE HEELED IN AND WATERED UNTIL INSTALLATION. PLANTS NOT MAINTAINED IN THIS MANNER WILL BE REJECTED.
19. CONTRACTOR SHALL BE RESPONSIBLE TO VERIFY THAT EACH EXCAVATED TREE AND SHRUB PIT WILL PERCOLATE PRIOR TO INSTALLING PLANTING MEDIUM AND PLANTS. THE CONTRACTOR SHALL FILL THE BOTTOM OF SELECTED HOLES WITH SIX INCHES OF WATER AND CONFIRM THAT THIS WATER WILL PERCOLATE WITHIN A 24-HOUR PERIOD. IF THE SOIL AT A GIVEN AREA DOES NOT DRAIN PROPERLY, A PVC DRAIN OR GRAVEL SUMP SHALL BE INSTALLED OR THE PLANTING SHALL BE RELOCATED IF DIRECTED BY THE LANDSCAPE ARCHITECT.
20. ALL PLANTS SHALL BE GUARANTEED FOR TWO COMPLETE GROWING SEASONS (APRIL 1 - NOVEMBER 1), UNLESS OTHERWISE SPECIFIED. THE GUARANTEE SHALL COVER THE FULL COST OF REPLACEMENT INCLUDING LABOR AND PLANTS.
21. CONTRACTOR SHALL NOTIFY THE LANDSCAPE ARCHITECT AT LEAST 3 DAYS PRIOR TO PLANNED DELIVERY. THE CONTRACTOR SHALL NOTIFY THE LANDSCAPE ARCHITECT AT LEAST 24 HOURS IN ADVANCE OF BEGINNING PLANT INSTALLATION.
22. SEASONS/TIME OF PLANTING AND SEEDING: NOTE: THE CONTRACTOR MAY ELECT TO PLANT IN OFF-SEASONS ENTIRELY AT HIS/HER RISK.

22.1.	POTTED PLANTS:	4/1 - 6/1; 9/21 - 11/1
22.2.	DECIDUOUS /B&B:	4/1 - 6/1; 9/21 - 11/1
22.3.	EVERGREEN POTTED PLANTS:	4/1 - 6/1; 9/21-11/1
22.4.	EVERGREEN B&B:	4/1 - 5/1; 9/21 - 11/1
22.5.	TURF/LAWN SEEDING:	4/1 - 6/1; 7/20 - 9/20
22.6.	NATIVE MIX SEEDING:	4/15 - 7/20; 9/20-10/20

23. MAINTENANCE SHALL BEGIN IMMEDIATELY AFTER EACH PORTION OF THE WORK IS IN PLACE. PLANT MATERIAL SHALL BE PROTECTED AND MAINTAINED UNTIL THE INSTALLATION OF THE PLANTS IS COMPLETE, INSPECTION HAS BEEN MADE, AND PLANTINGS ARE ACCEPTED EXCLUSIVE OF THE GUARANTEE. MAINTENANCE SHALL INCLUDE WATERING, CULTIVATING, MULCHING, REMOVAL OF DEAD MATERIALS, RE-SETTING PLANTS TO PROPER GRADE AND KEEPING PLANTS IN A PLUMB POSITION. AFTER ACCEPTANCE, THE OWNER SHALL ASSUME MAINTENANCE RESPONSIBILITIES. HOWEVER, THE CONTRACTOR SHALL CONTINUE TO BE RESPONSIBLE FOR KEEPING THE TREES PLUMB THROUGHOUT THE GUARANTEE PERIOD.
24. ANY PLANT MATERIAL WHICH DIES, TURNS BROWN, OR DEFOLIATES (PRIOR TO TOTAL ACCEPTANCE OF THE WORK) SHALL BE PROMPTLY REMOVED FROM THE SITE AND REPLACED WITH MATERIAL OF THE SAME SPECIES, QUANTITY, AND SIZE AND MEETING ALL LANDSCAPE LEGEND SPECIFICATIONS.
25. WATERING: MAINTAIN A WATERING SCHEDULE WHICH WILL THOROUGHLY WATER ALL PLANTS ONCE A WEEK. IN EXTREMELY HOT, DRY WEATHER, WATER MORE OFTEN AS REQUIRED BY INDICATIONS OF HEAT STRESS SUCH AS WILTING LEAVES. CHECK MOISTURE UNDER MULCH PRIOR TO WATERING TO DETERMINE NEED. CONTRACTOR SHALL MAKE THE NECESSARY ARRANGEMENTS FOR WATER.

TURF NOTES:

TURF ESTABLISHMENT SHALL BE ACCOMPLISHED IN ACCORDANCE WITH THE PROVISIONS OF THE MN/DOT 2105 AND 2575 EXCEPT AS MODIFIED BELOW:

1. ALL AREAS TO RECEIVE SOD SHALL ALSO RECEIVE 6" OF TOPSOIL PRIOR TO INSTALLING SOD. TOPSOIL SHALL BE FREE OF TREE ROOTS, STUMPS, BUILDING MATERIAL, AND TRASH, AND SHALL BE FREE OF STONES LARGER THAN 1 ½" INCHES IN ANY DIMENSION.
2. WHERE SOD ABUTS PAVED SURFACES, FINISHED GRADE OF SOD/SEED SHALL BE HELD 1" BELOW SURFACE ELEVATION OF TRAIL, SLAB, CURB, ETC.
3. SOD SHALL BE LAID PARALLEL TO THE CONTOURS AND SHALL HAVE STAGGERED JOINTS. ON SLOPES STEEPER THAN 3:1 OR IN DRAINAGE SWALES, SOD SHALL BE STAKED SECURELY.
4. TURF ON ALL OTHER AREAS DISTURBED BY CONSTRUCTION SHALL BE RESTORED BY SEEDING, MULCHING AND FERTILIZING. SEED MIXTURE NO.25-121 WILL BE PLACED AT THE RATE OF 65 POUNDS PER ACRE.
5. ALL DISTURBED AREAS TO BE TURF SEEDED, ARE TO RECEIVE 6" TOP SOIL, SEED, MULCH, AND WATER UNTIL A HEALTHY STAND OF GRASS IS OBTAINED. FOR SLOPES STEEPER THAN 3:1 OR IN DRAINAGE SWALES INSTALL EROSION CONTROL BLANKET.
6. ALL DISTURBED AREAS TO RECEIVE NATIVE SEED, ARE TO RECEIVE PLANTING SOIL, SEED, MULCH, AND WATER UNTIL A HEALTHY STAND OF GRASS IS OBTAINED. FOR SLOPES STEEPER THAN 3:1 OR IN DRAINAGE SWALES INSTALL EROSION CONTROL BLANKET.

GENERAL TREE SPECIFICATIONS:

1. ALL STREET AND PARKING LOT TREES SHALL BE LIMBED UP TO THE FOLLOWING HEIGHTS:
   - 1.1. 2" CAL. TREES: LOWEST BRANCH 6' HT.
   - 1.2. 3" CAL + TREES: LOWEST BRANCH 7' HT.
2. TREE CANOPY WIDTH SHALL BE RELATIVE TO HEIGHT/CALIPER OF TREE AND TYPE OF TREE.
   - 2.1. 1" CALIPER/6-8' HT: 3-4' WIDTH MIN.
   - 2.2. 2" CALIPER/12-14' HT: 4-5' WIDTH MIN.
   - 2.3. 3" CALIPER/14-16' HT: 6-7' WIDTH MIN.
3. CANOPY TREES SHALL NOT HAVE CO-DOMINATE LEADERS IN LOWER HALF OF TREE CROWN.
4. ALL TREES SHALL HAVE SYMMETRICAL OR BALANCED BRANCHING ON ALL SIDES OF THE TREE.
5. TREES SHALL NOT BE TIPPED PRUNED.
6. TREES SHALL BE FREE OF PHYSICAL DAMAGE FROM SHIPPING AND HANDLING. DAMAGED TREES SHALL BE REJECTED.
7. SUMMER DUG TREES SHALL HAVE ROOTBALL SIZE INCREASED BY 20%
8. TREES WHICH EXCEED RECOMMENDED CALIPER TO HEIGHT RELATIONSHIP SHALL BE REJECTED.

IRRIGATION NOTES:

1. IRRIGATION SYSTEM TO BE DESIGN/BUILD. CONTRACTOR TO SUBMIT SHOP DRAWINGS FOR APPROVAL OF SYSTEM LAYOUT PRIOR TO INSTALLATION.
2. ALL SOD TO RECEIVE SPRAY OR ROTOR IRRIGATION HEADS WITH MINIMUM DESIGN OF 1" IRRIGATION PER WEEK.
3. ALL PLANT BEDS TO RECEIVE DRIP LINE IRRIGATION , WITH A MINIMUM DESIGN OF .25" IRRIGATION PER WEEK.
4. CONTRACTOR TO INSTALL A TOTAL OF 4 QUICK COUPLERS AT THE CORNERS OF THE PROPERTY. A 2.5" TYPE K SOURCE PIPE IS PROVIDED BY MECHANICAL.

LOW MAINTENANCE FESCUE NOTES:

1. DURING GROWING SEASON NEVER MOW SHORTER THAN 3.5 INCHES, PREFERRED MAINTENANCE IS MOW ONCE PER MONTH AT 5" HEIGHT
2. DO NOT USE HIGH NITROGEN FERTILIZER ON FESCUE LAWN
3. OVERSEED THIN,BARE SPOTS IN FALL
4. ALWAYS USE SHARP BLADE WHEN MOWING TO AVOID TEARING LEAF BLADE
5. SET MOWER TO 3" FOR BAGGING AND MOWING IN LATE FALL AFTER GROWING SEASON

NATIVE SEED MIX NOTES:

1. ESTABLISHMENT AND YEAR ONE: MOW THREE(3) TIMES FIRST YEAR ON 30-DAY INTERVALS TO A HEIGHT BETWEEN FIVE AND EIGHT INCHES. DO NOT USE FERTILIZERS. SPOT TREAT INVASIVE WOODY PLANTS OR HAND WEED INDIVIDUAL NOXIOUS WEEDS.
2. YEAR TWO: PERFORM ONE MOWING BETWEEN MID-JUNE AND MID-AUGUST. SPOT SPRAY WEEDS AS NEEDED WHERE THEY ARE ESPECIALLY DOMINATE.
3. YEAR THREE (AND BEYOND): CUT ONE TIME PER YEAR AS A CLEAN UP PROCEDURE (EITHER IN EARLY MAY OR LATE NOVEMBER). PRESCRIBED BURNS MAY BE USED AS WELL IN PLACE OF MOWING. CHECK LOCAL REGULATIONS AND PERMIT PROCEDURES.

NO	DATE	BY	CKD	APPR	COMMENT
	05/03/2022				Final Site and Building Plan Application

I hereby certify that this plan, specification, or report was prepared by me or under my direct supervision and that I am a duly Licensed Landscape Architect under the laws of the State of Minnesota.

Print Name: Johnnie R. Workman

Date _____ License # _____

PRELIMINARY | DESIGN REVIEW | PERMIT SUBMITTAL | CONSTRUCTION DOCUMENTS

DRAWN BY | DESIGNED BY | CHECKED BY | PROJECT NO. 50521

Sambatek www.sambatek.com
Engineering | Surveying | Planning | Environmental

LANDSCAPE DETAILS AND NOTES

AV DEVELOPMENT, LLC
CLOVER RIDGE APARTMENTS

CHASKA, MINNESOTA

SHEET L1.02 3 OF 10 REV.

© 2021 Sambatek

C:\USERS\ALEA.STUTZ (LMS TECH) | ALEA STUTZ | 5/2/2022 3:33:34 PM
C:\PROJECTS\50521\CAD\CIVIL\SHEETS\50521-L1-LSCP DWG\L1.02 LANDSCAPE DETAILS AND NOTES



1 EAST ELEVATION
SCALE: 3/32" = 1'-0"



2 SOUTH ELEVATION
SCALE: 3/32" = 1'-0"



3 SOUTHWEST ELEVATION
SCALE: 3/32" = 1'-0"



4 NORTHEAST ELEVATION - 1
SCALE: 3/32" = 1'-0"

B1 - Modular Brick



B2 - Split Face Concrete Masonry Block



S1 - Fiber Cement Panels



S2 - Fiber Cement Lap Siding - Dark



S3 - Fiber Cement Lap Siding - Cedar



PRELIMINARY- NOT FOR CONSTRUCTION

JCorp
1680 SW Ankeny Rd, #2D
Ankeny, IA 50023
Phone: (515) 597-5457
Fax: (515) 597-5461
www.jcorpdesignbuild.com

PROJECT:
Clover Ridge Apartments
Chaska, MN 55318

REVISIONS:

05 / 24 / 2022

PROJECT NO: 21-043

CONTENTS:
Elevations

SHEET NO:
A201



1 NORTHWEST ELEVATION

SCALE: 3/32" = 1'-0"



2 SOUTHEAST ELEVATION

SCALE: 3/32" = 1'-0"



3 NORTHEAST ELEVATION - 2

SCALE: 3/32" = 1'-0"



4 NORTH ELEVATION

SCALE: 3/32" = 1'-0"

B1 - Modular Brick



B2 - Split Face Concrete Masonry Block



S1 - Fiber Cement Panels



S2 - Fiber Cement Lap Siding - Dark

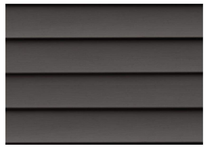

S3 - Fiber Cement Lap Siding - Cedar



PRELIMINARY- NOT FOR CONSTRUCTION

JCorp
1680 SW Ankeny Rd, #2D
Ankeny, IA 50023
Phone: (515) 597-5457
Fax: (515) 597-5461
www.jcorpdesignbuild.com

PROJECT:
Clover Ridge Apartments
Chaska, MN 55318

REVISIONS:

05 / 24 / 2022

PROJECT NO: 21-043

CONTENTS:
Elevations

SHEET NO:
A202



1 NORTHWEST ELEVATION

SCALE: 3/32" = 1'-0"



2 NORTHEAST ELEVATION - 1

SCALE: 3/32" = 1'-0"

PRELIMINARY- NOT FOR CONSTRUCTION

JCorp
1680 SW Ankeny Rd, #2D
Ankeny, IA 50023
Phone: (515) 597-5457
Fax: (515) 597-5461
www.jcorpdesignbuild.com

PROJECT:
Clover Ridge Apartments
Chaska, MN 55318

REVISIONS:

05 / 19 / 2022

PROJECT NO: 21-043

CONTENTS:
ELEVATIONS

SHEET NO:
200





1 **EAST AERIAL**
SCALE:



2 **MAIN ENTRY**
SCALE:



3 **NORTH AERIAL**
SCALE:

PRELIMINARY- NOT FOR CONSTRUCTION

JCorp

1680 SW Ankeny Rd, #2D
Ankeny, IA 50023
Phone: (515) 597-5457
Fax: (515) 597-5461
www.jcorpdesignbuild.com

PROJECT:
Clover Ridge Apartments
Chaska, MN 55318

REVISIONS:

05 / 02 / 2022

PROJECT NO: 21-043

CONTENTS:
3D Views

SHEET NO:
A203

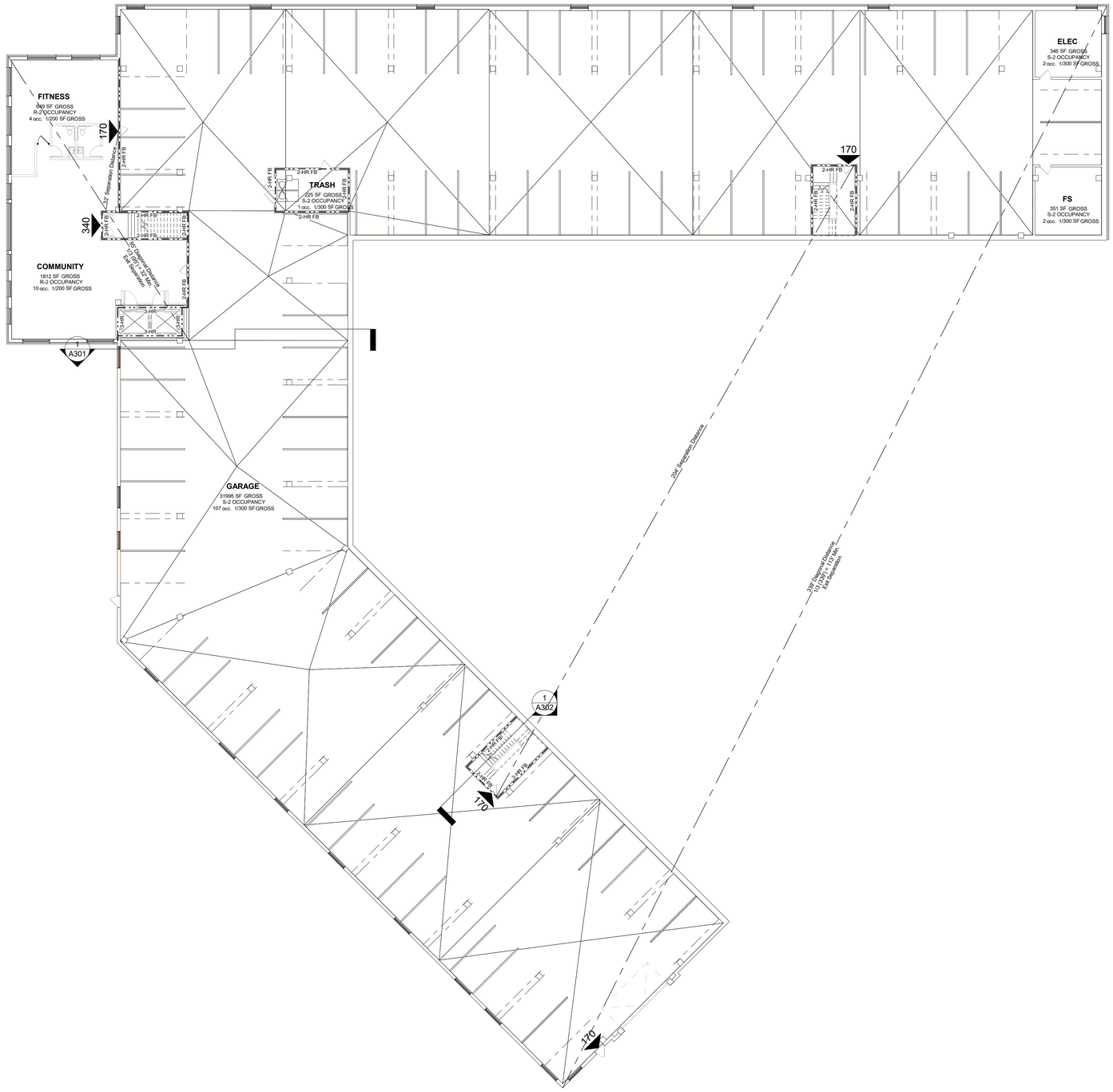

CODE - FIRE SEPARATIONS

- 1/2 HR FIRE PARTITION
- 1 HR FIRE PARTITION
- 1 HR FIRE BARRIER
- 2 HR FIRE BARRIER
- 1 HR FIRE RATED
- 2 HR FIRE WALL

1 BASEMENT - CODE REVIEW

SCALE: 1/16" = 1'-0"

PRELIMINARY- NOT FOR CONSTRUCTION

JCorp
1680 SW Ankeny Rd, #2D
Ankeny, IA 50023
Phone: (515) 597-5457
Fax: (515) 597-5461
www.jcorpdesignbuild.com

PROJECT:
Clover Ridge Apartments
Chaska, MN 55318

REVISIONS:

04 / 18 / 2022

PROJECT NO: 21-043

CONTENTS:
Code Review Plan

SHEET NO:
G201

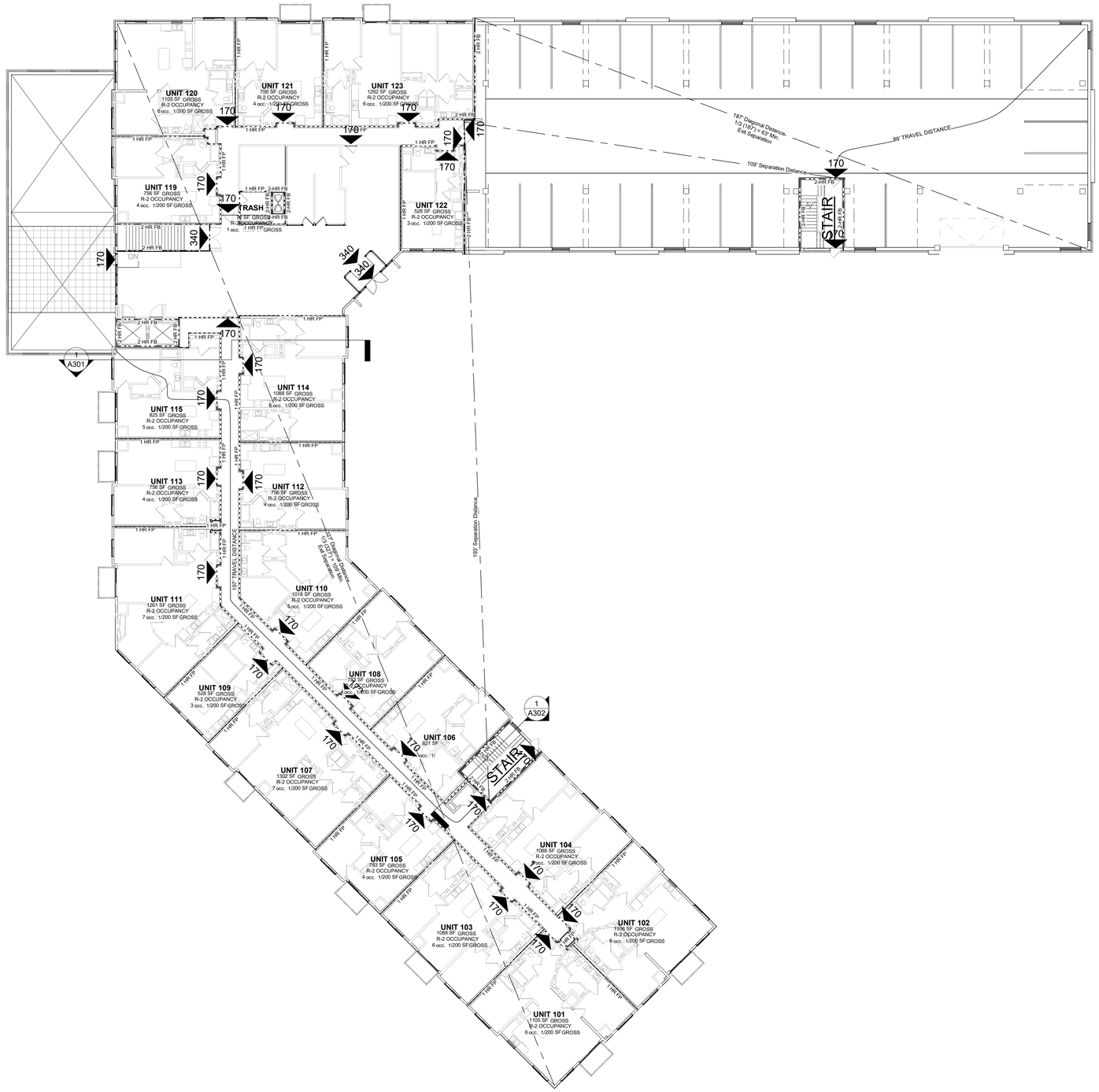

1 1ST FLOOR - CODE REVIEW

SCALE: 1/16" = 1'-0"

CODE - FIRE SEPARATIONS

- 1/2 HR FIRE PARTITION
- 1 HR FIRE PARTITION
- 1 HR FIRE BARRIER
- 2 HR FIRE BARRIER
- 1 HR FIRE RATED
- 2 HR FIRE WALL

PRELIMINARY- NOT FOR CONSTRUCTION

JCorp

1680 SW Ankeny Rd, #2D

Ankeny, IA 50023

Phone: (515) 597-5457

Fax: (515) 597-5461

www.jcorpdesignbuild.com

PROJECT:
Clover Ridge Apartments
Chaska, MN 55318

REVISIONS:

04 / 18 / 2022

PROJECT NO: 21-043

CONTENTS:
Code Review Plan

SHEET NO:
G202



1 2ND FLOOR - CODE REVIEW

SCALE: 1/16" = 1'-0"

CODE - FIRE SEPARATIONS

- 1/2 HR FIRE PARTITION
- 1 HR FIRE PARTITION
- 1 HR FIRE BARRIER
- 2 HR FIRE BARRIER
- 1 HR FIRE RATED
- 2 HR FIRE WALL

PRELIMINARY- NOT FOR CONSTRUCTION

JCorp

1680 SW Ankeny Rd, #2D

Ankeny, IA 50023

Phone: (515) 597-5457

Fax: (515) 597-5461

www.jcorpdesignbuild.com

PROJECT:
Clover Ridge Apartments
Chaska, MN 55318

REVISIONS:

04 / 18 / 2022

PROJECT NO: 21-043

CONTENTS:
Code Review Plan

SHEET NO:
G203



1 3RD FLOOR - CODE REVIEW

SCALE: 1/16" = 1'-0"

CODE - FIRE SEPARATIONS

- 1/2 HR FIRE PARTITION
- 1 HR FIRE PARTITION
- 1 HR FIRE BARRIER
- 2 HR FIRE BARRIER
- 1 HR FIRE RATED
- 2 HR FIRE WALL

PRELIMINARY- NOT FOR CONSTRUCTION

JCorp

1680 SW Ankeny Rd, #2D

Ankeny, IA 50023

Phone: (515) 597-5457

Fax: (515) 597-5461

www.jcorpdesignbuild.com

PROJECT:
Clover Ridge Apartments
Chaska, MN 55318

REVISIONS:

04 / 18 / 2022

PROJECT NO: 21-043

CONTENTS:
Code Review Plan

SHEET NO:
G204



1 4TH FLOOR - CODE REVIEW

SCALE: 1/16" = 1'-0"

CODE - FIRE SEPARATIONS

- 1/2 HR FIRE PARTITION
- 1 HR FIRE PARTITION
- 1 HR FIRE BARRIER
- 2 HR FIRE BARRIER
- 1 HR FIRE RATED
- 2 HR FIRE WALL

PRELIMINARY- NOT FOR CONSTRUCTION

JCorp

1680 SW Ankeny Rd, #2D

Ankeny, IA 50023

Phone: (515) 597-5457

Fax: (515) 597-5461

www.jcorpdesignbuild.com

PROJECT:
Clover Ridge Apartments
Chaska, MN 55318

REVISIONS:

04 / 18 / 2022

PROJECT NO: 21-043

CONTENTS:
Code Reivew Plan

SHEET NO:
G205

REQUEST FOR ACTION
CHASKA PLANNING COMMISSION
6/8/2022

Subject: **415 Walnut Street North – Conditional Use Permit for Professional Services/Offices Use**

Applicant: Chaska Moravian Church

Location: 415 Walnut Street North

Case No.: 2022-33

Synopsis: Applicant/property owner seeks to obtain approval of a conditional use permit for a professional services/offices use in the R2 district to enable them to lease this existing house to the His House Foundation, a community-based human services agency that provides housing stabilization counseling services.

Prepared By: Jeff Miller

Staff Recommendation: Motion to recommend approval to the City Council

---

BACKGROUND

Chaska Moravian Church, the applicant, is the owner of the 415 Walnut Street North property which contains an existing single-family house. This property is located in downtown and the R2 zoning district. The property has been occupied as a private residence until the month of November. The applicant is seeking the ability to lease the house for a non-residential use to the His House Foundation (HHF), which will use the space for service agency/office uses. This use is currently operating in the adjacent Chaska Moravian Church building to the south.



Chaska Moravian Church also currently owns the properties adjacent to the subject property, including the church to the south and two single-family houses to the north. The subject property has historic significance as the Caspar Schmidt House, which was built in 1876. This property is designated as a local and national historic resource, including as a contributing historic property in the Walnut Street Historic District, which is listed on the National Register of Historic Places (NRHP), and as a resource in the City's local historic district. The three adjacent properties are also located in both the national and local historic district. One of the adjacent houses to the north, which is a non-contributing property in the historic district, is planned for removal in order to construct a new public parking lot.

CURRENT REQUEST

Chaska Moravian Church has submitted an application for a Conditional Use Permit for a professional services/office use in the R2 district to enable them to lease this existing house to the His House Foundation, a community-based human services agency that provides housing stabilization counseling services.

The R2 district permits "professional services/offices such as insurance and real estate offices, attorney's offices and counseling services within existing residential structures located on Pine Street and Walnut Street from T.H. 212 southerly to their intersection at Second Street" by a Conditional Use Permit. Since the subject property is an existing residential structure located on Pine St, R2 district permits "professional services/offices" by a Conditional Use Permit.

As part of the applicant's Written Statement, they have stated that they intend to add signage to the property and have submitted some examples of the signs. Any signs are required to submit a separate Sign Permit application and are regulated by Zoning Ordinance 15.32.

CONDITIONAL USE PERMIT

A Conditional Use Permit may be granted by the City Council after demonstration by evidence that the proposed use meets the following six conditions. Staff finds that the proposed use meets all six conditions as described below each condition.

a) *The establishment, maintenance, or operation of the special use will not be detrimental to or endanger the public health, safety, comfort or general welfare.*
    - The proposed professional services/offices use is currently operating in the adjacent Chaska Moravian Church building. The relocation of this existing low intensity use to the adjacent property will not cause it to be detrimental to or endanger the public health, safety, comfort or general welfare in any way substantially different from the present situation.

b) *The special use will not be injurious to the use and enjoyment of other property in the immediate vicinity for the purpose already permitted, nor substantially diminish and impair property values within the neighborhood.*
    - The proposed professional services/offices use is a low intensity use. The applicant states that there will typically be five clients a week and five staff members to meet with them. The purpose of the usage is for case workers to have private conversations/intake meetings with clients. The space will also be used for board meetings of up to 10 people at a time. The building entrance faces south toward the adjacent church property therefore clients entering the building will have minimal impact on the adjacent residential properties to the north. Most clients will

also not be driving therefore a parking issue is not of concern. The His House Foundation hours of operation are planned to be 9am to 4pm, Monday – Friday.

c) *The establishment of the special use will not impede the normal and orderly development and improvement of surrounding property for uses permitted in the district.*
   - Since the proposed professional services/offices use is a low intensity use, will have minimal parking needs, and the building's entrance faces the adjacent institutional use rather than adjacent residential uses, it will not impede the development and improvement of surrounding properties.

d) *Adequate utilities, access roads, drainage, and necessary facilities have been or will be provided.*
   - Since the property has been occupied as a private residence until recently, it is equipped with adequate utilities and infrastructure to accommodate the proposed low intensity professional services/offices use. Since the structure's size is less than 2,000 square feet, the City's Fire Inspector has determined that the structure is not required to have fire sprinklers installed.

e) *Adequate measures have been or will be taken to provide ingress or egress so designed as to minimize traffic congestion in the public streets.*
   - Parking is not currently provided on the subject property, so adequate vehicle ingress or egress to the property is not an issue. Uses permitted in existing downtown buildings shall not be required to provide additional parking beyond that available on-site. Adequate public parking is available on 4th St, Walnut St, 3rd St, and soon in a new public off-street parking lot adjacent to the subject property due to the Highway 41 Project. Combined with the expected low volume of clients, the proposed use should not substantially impact traffic and parking in the area's streets.

f) *The special use shall, in all other respects, conform to the applicable regulations of the district in which it is located.*
   - Since the R2 district permits "professional services/offices" by a Conditional Use Permit, the proposed professional services/offices use conforms to the R2 district use regulations.

FINDINGS

Based on the documentation submitted by the applicant and the aforementioned analysis, staff finds that this request as outlined meets the findings necessary for a Conditional Use Permit.

Staff believes the requested non-residential use is appropriate for this property. With the conditions and stipulations of the Conditional Use Permit adhered to, staff believes this will be a compatible addition to the community.

PLANNING COMMISSION ACTION REQUESTED

Motion to recommend to City Council approval of the Conditional Use Permit for a professional services/offices use on the 415 Walnut Street North property, subject to the following conditions:

1. **Approvals shall be based on the following exhibits:**
   a. **Written Statement Describing the Intended Use of the Property;**

   b. **Floor/Site Plan for 415 Walnut St N, including the house's square footage.**
2. **Any signs are required to submit a separate Sign Permit application and are regulated by Zoning Ordinance section 15.32.**
3. **As a locally designated historic property, any exterior alterations to the house will require submittal of a Site Alteration Permit subject to approval by the Chaska Heritage Preservation Commission.**

Written Statement describing the intended use of the property

Chaska Moravian Church(CMC) is seeking the ability to rent space to the His House Foundation (HHF), utilizing the building at 415 Walnut St N. We are therefore seeking a special use provision for the building which is currently R2 Residential designation.

Proposed hours of operation: 10a-4p M-F
Nature of Usage: Typically 5 clients a week would come in and out the building and 5 staff members to meet with them at varying times. The purpose of the usage is for case workers to have private conversations with clients and do private intakes. The space will also be used for board meetings of approximately up to 10 people at a time. Most clients coming in and out of the space do not drive and so a parking issue is not of concern.
How does it operate: This is for a division of HHF that assists clients in navigating housing crises, which needs private meeting space for the private information discussed. That is the intended operation and usage that would take place in this space.

a) The establishment, maintenance, or operation of the special use will not be detrimental to or endanger the public health, safety, comfort or general welfare;

- The main operation of the proposed usage is to allow for HHF to have the space necessary to do their very important work in the community. HHF, being a housing stabilization service in Carver and Scott county, requires private space for in-take meetings with clients in order to ensure confidentiality. For that reason, this space is perfect for their purposes to meet with clients in a quiet and professional manner. Board meetings of up to 10 people at a time also fit the requirements of zoning, as they are no larger than a family gathering over Sunday dinner, for example.

b) The special use will not be injurious to the use and enjoyment of other property in the immediate vicinity for the purpose already permitted, nor substantially diminish and impair property values within the neighborhood;

- The intention for this special use would be primarily indoors and thus would not affect properties adjacent to it. The only alteration to the outdoor portion of the property would pertain to signage which would be small, but noticeable. An example of such signage is attached below.

c) The establishment of the special use will not impede the normal and orderly development and improvement of surrounding property for uses permitted in the district;

- Given that the intended usage pertains to the indoors of the property, this would not affect or impede other development taking place in the surrounding area. The Highway 41 Project, for instance, which is upcoming in the next few years, will technically affect the property that this residence sits on, but the special use and the project will not conceivably intersect.

d) Adequate utilities, access roads, drainage, and necessary facilities have been or will be provided;

- The property was occupied as a private residence until the month of November, therefore it is fully equipped to accommodate the special use as an office space.

e) Adequate measures have been or will be taken to provide ingress or egress so designed as to minimize traffic congestion in the public streets;

- A large portion of HHF clientele do not possess automobiles and for that reason, there will not be a significant increase in traffic in this area as a result of the special use. There is no parking available on the property, but ample parking is available publicly on 4th street, Walnut street, 3rd street, and soon in between 3rd and 4th thanks to the Highway 41 Project. This, combined with the expected volume of client interaction during the week should not significantly affect traffic in the area anymore than it already does as a result of HHF conducting business in the Chaska Moravian Church building.

f) The special use shall, in all other respects, conform to the applicable regulations of the district in which it is located.

- His House Foundation (http://www.hishousefoundation.com) as previously stated, is a housing stability service in the community. Currently, the work that they do lands in three major areas:
    - The coordinated entry into resources available to clients and walking with them as they gain access.
    - The Resource Center, which has food, clothing, and household items available at no limit and no cost to clients and walk-ins.
    - The Abundance Food program that diverts food from the waste stream and redistributes it to those in need.
    -
- The Resource Center is housed in the basement of Chaska Moravian Church. The Abundance Food Program bases itself out of CMC's kitchen. The Coordinated entry and case management side of HHF's work takes place in many places, but one of them is within CMC property.
- This special use is not intended to change the current organizational structure above, but to take more stress off of the Case management and Coordinated Entry parts of it. Having this space would allow HHF to take on clients in a more professional and efficient manner. It would allow for HHF to have their own space instead of only sharing space and running into the organizational difficulties that come along with this.
- In summary, this special use would not change much regarding how this district is already being utilized, but reform it into more organization, professionalism, and efficiency.

Note: Larger copies of the GIS and Site Plan will be included with this report.

Examples of the nature of signage:



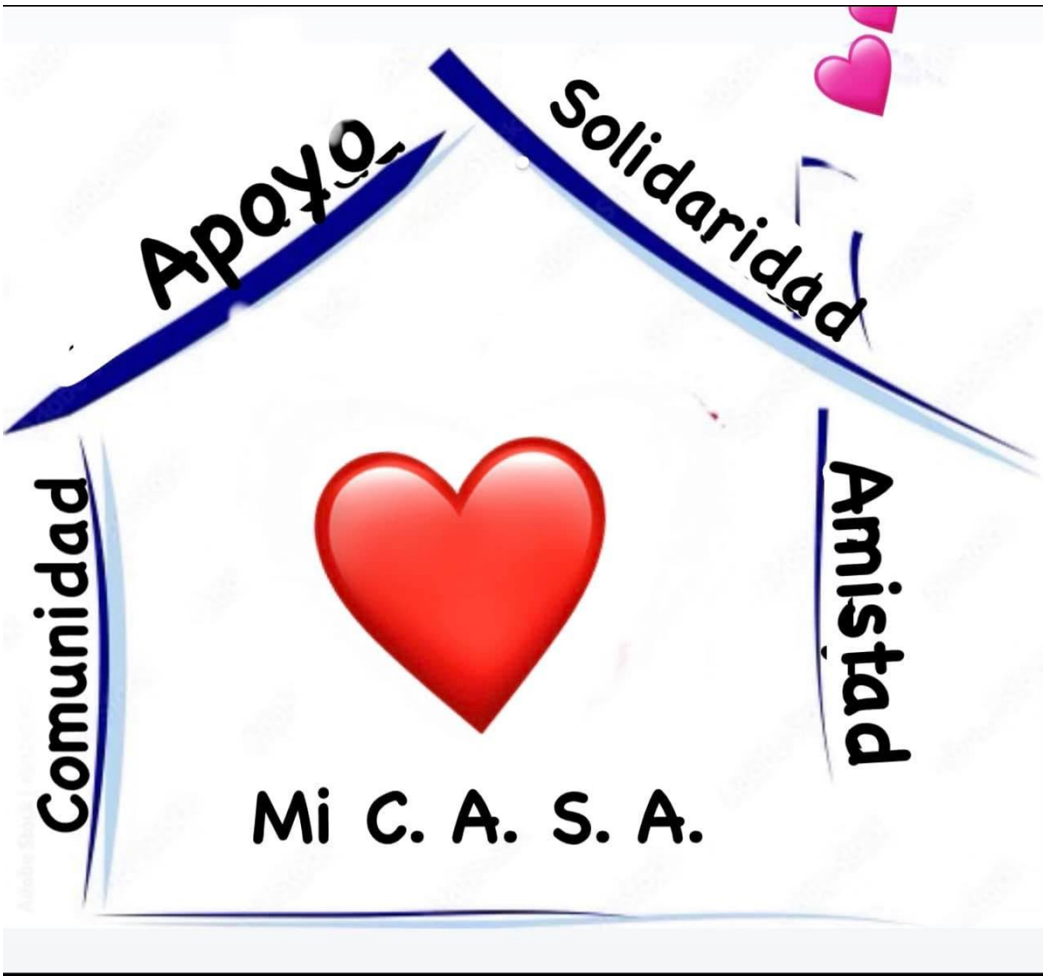

GIS of Property:

Note: This property will be affected by the Highway 41 Project. The Special use primarily pertains to the utilization of the house located on this property.

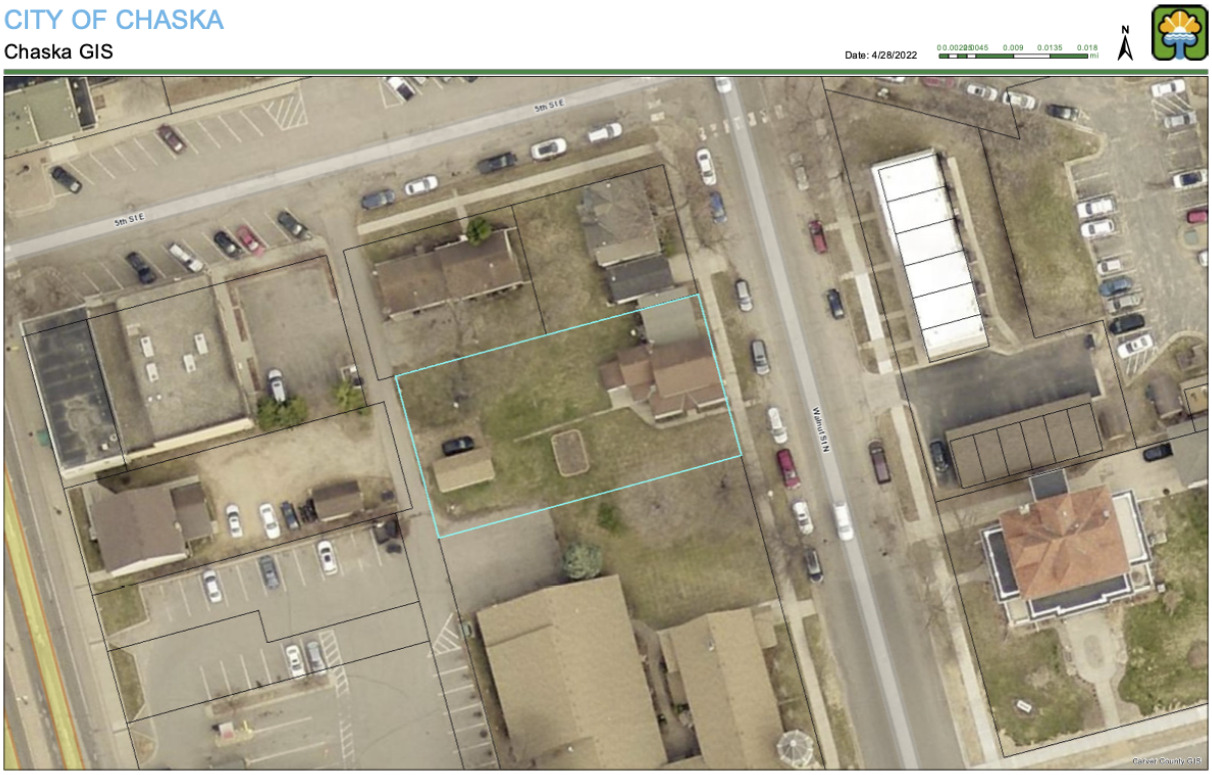

Site Plan:

SHIRLEY SCHMIDT
BUILDING USE: 000300 CHASKA SFR
BUILDING CHARACTERISTICS:

CODES		DESCRIPTIONS
NBHD		.97
DIV%		1.000
EXW	19	COMMON BRK
EXW	08	% 3 WD/SHTH/MS
RCVR	03	COMP SHNGL
RSTR	03	GABLE/HIP
INT	03	PLASTER
INT	%	
FLR	12	HARDWOOD
FLR	08	% 2 SHT VINYL
HTTP	04	AIR DUCTED
A/C	01	1 AC UNIT
QUAL	30	AVERAGE
FRME	01	WD FRM 2X4
CEIL	04	TYPICAL
SIZE	04	IRREGULAR
HEAT	03	GAS
PCT+		
HCAP		
FRPL		
WK/O		
HTUB		
TUCK		
TAG	01	TAG
STYS		2.00
BATH		2.00
FIXT		8
RMS		
UNIT		
BDRM		4
C-W%		
HGHT		
PMTR		
WIND	02	PART.UPDAT
FNDN	04	STONE
KTCH	02	PART.UPDAT
UD-9		
UD-9	%	
AYB	1860	EYB 1972
SPCD	%	
FUNC	DP	ECON DP

415 WALNUT ST N CHASKA 55318-2073
MODEL: 01 SFR ARCH STYLE: 03 2 STORY
CENSUS TRACT: 00000000 BLOCK: 000000

2009R30.0501110 /001
CAMA INDEX: 107.300
NEIGHBORHOOD: 000030.02 NBHD INDEX: 97.000

AREA CALCULATION

SUB-AREA	%	TOTAL AREA	ADJ RATE	RCN VALUE	% GOOD	RCNLD VALUE
ONE1950	100	646	78.975	51018	77.00	39283
TWO1950	190	728	150.032	109223	77.00	84101
GDU1950	25	288	19.743	5686	77.00	4378
PEU1950	40	103	31.437	3238	77.00	2493
POP1950	18	204	14.324	2922	77.00	2249
*Total		1969		172089		132509

SEQ# 1

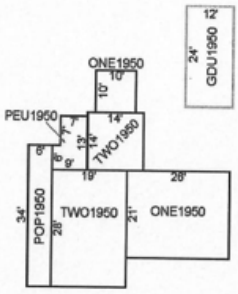

APX: 300501110B001

XFOB	BN	CODE	DESCR	DM1	DM2	DM3	# UNITS	UT	PRICE	YEAR	QTY	ADJ1	QL	DEPR%	DIV%	NBHD DEPR	VALU

CITY OF CHASKA

Chaska GIS

Date: 4/28/2022

0 0.00225 0.0045 0.009 0.0135 0.018 mi

N



SHIRLEY SCHMIDT
BUILDING USE: 000300 CHASKA SFR
BUILDING CHARACTERISTICS:

CODES		DESCRIPTIONS
NBHD		.97
DIV%		1.000
EXW	19	COMMON BRK
EXW	08	% 3 WD/SHTH/MS
RCVR	03	COMP SHNGL
RSTR	03	GABLE/HIP
INT	03	PLASTER
INT		%
FLR	12	HARDWOOD
FLR	08	% 2 SHT VINYL
HTTP	04	AIR DUCTED
A/C	01	1 AC UNIT
QUAL	30	AVERAGE
FRME	01	WD FRM 2X4
CEIL	04	TYPICAL
SIZE	04	IRREGULAR
HEAT	03	GAS
PCT*		
HCAP		
FRPL		
WK/O		
HTUB		
TUCK		
TAG	01	TAG
STYS		2.00
BATH		2.00
FIXT		8
RMS		
UNIT		
BDRM		4
C-W%		
HGHT		
PNTR		
WIND	02	PART.UPDAT
FNDN	04	STONE
KTCH	02	PART.UPDAT
UD-9		
UD-9		%
AYB	1860	EYB 1972
SPCD		%
FUNC	DP	ECON DP

415 WALNUT ST N CHASKA 55318-2073
MODEL: 01 SFR ARCH STYLE: 03 2 STORY
CENSUS TRACT: 00000000 BLOCK: 000000

2009R30.0501110 /001
CAMA INDEX: 107.300
NEIGHBORHOOD: 000030.02 NBHD INDEX: 97.000

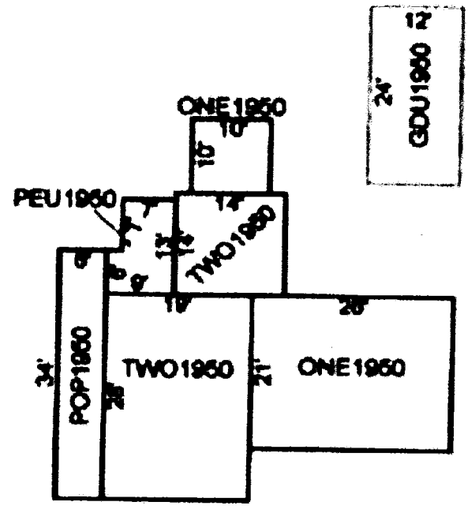

AREA CALCULATION

SUB-AREA	%	TOTAL AREA	ADJ RATE	RCN VALUE	% GOOD	RCNLD VALUE
ONE1950	100	646	78.975	51018	77.00	39283
TWO1950	190	728	150.032	109223	77.00	84101
GDU1950	25	288	19.743	5686	77.00	4378
PEU1950	40	103	31.437	3238	77.00	2493
POP1950	18	204	14.324	2922	77.00	2249
*Total		1969		172089		132509

SEQ# 1

APX: 300501110B001

XFOB	BN	CODE	DESCR	DM1	DM2	DM3	# UNITS	UT PRICE	YEAR	QTY	ADJ1	QL	DEPR%	DIV%	NBHD DEPR	VALU

- MINUTES -
CHASKA CITY COUNCIL
APRIL 18, 2022

1. Call to Order
The meeting was called to order by Mayor Windschitl at 7:00 pm.

2.Pledge of Allegiance

3. Roll Call
Roll call was taken. Present: Councilmembers Grau, Hatfield, Hubbard, Huang, and Mayor Windschitl

Absent: None.

Also Present: Matt Podhradsky, City Administrator; Noel Graczyk, Administrative Services Director; Kevin Wright, Communication Director; Elise Durbin, Assistant Administrator; Parks and Recreation Director Marshall Grange; Nate Kabat, Community Development Director; Liz Hanson, City Planner; Jake Saufley, City Attorney; and City Engineer Matt Clark.

4. Adopt the Agenda
Motion by Councilmember Hubbard, second by Councilmember Hatfield to adopt the agenda with the noted correction. Motion carried.

5. Visitor Presentation
None at this time.

6. Minutes

6.A. Approve April 4, 2022 City Council Meeting Minutes
Motion by Councilmember Grau, second by Councilmember Hubbard to approve the minutes of the April 4, 2022 City Council meeting.
Motion carried.

7. Consent Agenda
Motion by Councilmember Hubbard, second by Councilmember Huang to approve the Consent Agenda Items A through G:

A. Adopt Resolution 2022-39, Approving MnDot Master Partnership Contract

Motion to approve Resolution No. 2022-39 to enter into the MnDot Master Partnership Contract.

B. Adopt Resolution 2022-48, Approve Construction Plans for Downtown Chaska TH 41/CSAH 61and Authorize Solicitation for Bids

Motion to adopt Resolution No. 2022-48, approving the construction documents for the Downtown Chaska TH 41/CSAH 61 Project, and authorizing the solicitation of public bids.

C. Letter of Support Trunk Highway 5 State Legislation

Motion to authorize the Mayor to sign a letter of support for Trunk Highway 5 state legislation.

D. Adopt Resolution 2022-40, Recommend Approval of the Final Plat for Reserve at Autumn Woods/Lennar/PC #2022-12

Motion to adopt Resolution No. 2022-40 approving the Final Plat for Reserve at Autumn Woods (PC #2022-12).

E. Adopt Resolution 2022-45, Approving the Lot Splits for the Kelzer and Chaska Investments Properties/DR Horton/PC #2022-24

Motion to adopt Resolution 2022-45, approving the Lot Splits on the Kelzer and Chaska Investments properties, subject to the stipulations included in said resolution and the following conditions:

1. Approvals shall be based on the following graphic exhibits:
    a. Lot Split (Kelzer), prepared by Westwood, dated March 9, 2022 and revised March 16, 2022
    b. Lot Split (Chaska Investments; Outlot A Clover Preserve 2nd Addition), prepared by Westwood, dated March 9, 2022.

F. Adopt Resolution 2022-44, Approving the Preliminary Site & Building Plan for Southwest Christian High School/Southwest Christian/PC #2022-19

Motion to adopt Resolution No. 2022-44 approving the Preliminary Site & Building Plan for the Fieldhouse Addition at Southwest Christian High School (PC #2022-19).

G. 2022 Union Contracts – LELS Lieutenants and Teamsters

Motion to approve employment contracts for 2022 between the City of Chaska and LELS Local 447 and Teamsters Local 320 with these agreements becoming effective January 1, 2022.
Motion carried.

8. Action Items

8.A. Adopt Resolution 2022-49, Public Hearing - 2022 Downtown Street Reconstruction Assessment Hearing

City Administrator Podhradsky introduced and provided some background on this item.

City Engineer Clark stated the property owners at 525 East 6th Street reached out regarding a deferral on their assessment late last week and noted they could not be in attendance this evening for the hearing but would like to be on record stating their request for further discussion. He stated staff agreed to put that information on the record on their behalf and will work with the property owners on next steps when they are back in town.

Councilmember Grau stated it's important to note the assessment fees haven't changed or increased since 2010. He stated keeping fees as low as possible allows them to work with residents and make it affordable for everyone.

Mayor Windschitl opened the public hearing at 7:16 pm.

No one wished to address the Council.

Mayor Windschitl closed the public hearing at 7:17 pm.

Motion by Councilmember Hubbard, seconded by Councilmember Huang to Motion to Adopt Resolution No. 2022-49 approving the assessment roll for the 2022 Street Reconstruction Project.
Motion carried.

8.B. Adopt Resolution 2022-47, Public Hearing to Consider Certification of Spring 2022 Delinquent Utilities
City Administrator Podhradsky introduced and provided some background on this item.

Mayor Windschitl opened the public hearing at 7:21 pm.

No one wished to address the Council.

Mayor Windschitl closed the public hearing at 7:22 pm.

Motion by Councilmember Grau, second by Councilmember Hatfield to Motion to Approve a Resolution 2022-47 approving certification of delinquent utilities and miscellaneous unpaid charges to Carver County for collection with the payable 2023 property taxes.
Motion carried.

8.C. Adopt Resolution 2022-41 and Ordinance 1014, Approving the Preliminary Site & Building Plan, Preliminary Plat and Rezoning for Cantissimo/Anasazi Holdings/PC #2022-01
City Administrator Podhradsky introduced this item.

City Planner Hanson provided a presentation and background on this item.

Councilmember Grau asked if they plan to sell to a management company and if so, do they have one in mind already.

Todd Ofsthun, TCO design, addressed the Council and stated it is his understanding that they are going to keep ownership but will partner with a management company. He stated they have one in mind already, the same management company they use for the other properties.

Councilmember Huang stated the driveway is the only issue he has with the plan and it looks like they have a solution in mind already for that. He stated he appreciates the residents working with the developer to come up with a good compromise and solution.

Motion by Councilmember Huang, second by Councilmember Grau to adopt Resolution No. 2022-41 approving the Preliminary Site & Building Plan and Preliminary Plat for Cantissimo of Chaska (PC #2022-01).

Motion by Councilmember Huang, second by Councilmember Hubbard to adopt Ordinance No. 1014 approving the rezoning from Planned Residential District (PRD-38) to Planned Residential District (PRD-83).
Motion carried.

8.D. Adopt Resolution 2022-42 and Ordinance 1015, Approving the Preliminary Plat and Rezoning for Oak Creek/DR Horton/PC #2022-20
City Administrator Podhradsky introduced this item.

City Planner Hanson provided a presentation and background on this item.

Councilmember Hubbard stated she is wondering how tall the height of the railroad is compared to the house height. She noted her concern is the landscaping they plan to put there won't provide much of a buffer if it will take years for the trees or shrubs to mature and grow. She noted she would like to see something there that can provide that buffer immediately if possible.

Mike Suel, D.R. Horton, addressed the Council and stated the railroad is about 14ft higher than the lot she is wondering about. He stated he understands her concerns and they will look at some options that will provide a good landscaping buffer sooner than later.

Councilmember Huang asked if there is a reason they cannot put the fence on the berm.

Mr. Suel stated if the fence was on the berm space would be an issue. He stated due to drainage and landscaping needs the houses would be left without any yard.

City Administrator Podhradsky stated this plan isn't much different than the several homes on Romeo Court and Ashley Street where the homes are situated similarly with the railway there.

Councilmember Huang asked if they will put additional insulation for noise in the housing.

Mr. Suel stated by fulfilling the Minnesota Energy Codes while building, they end up providing a good amount insulation already, which serves as a good noise barrier.

Mayor Windschitl called upon the audience for public input.

Ray Linder, 1401 Clover Preserve Drive, addressed the Council and stated he appreciates the staff and developer for working with the residents from the Clover Ridge area and taking their concerns into consideration and making changes as needed. He stated this plan is a drastic improvement compared to the last plan they saw. He noted his only concern is that he can see the fencing becoming a place for graffiti. He stated he doesn't know if it is necessary for the fence to be there but if they move forward with it he would like to make sure it is well maintained.

Community Development Director Kabat stated the fence isn't required legally but stated it is something the developer suggested and the staff saw as an opportunity to provide safety for the children and animals in the area. He noted the Jonathan HOA will most likely be responsible for maintaining it.

Pablo Murillo, 1466 Clover Preserve Lane, addressed the Council and stated he applauds the city and developer for balancing the economics while making sure the most important thing is taken care of; the safety of the children and families in the area. He thanked them for allowing

the residents to give their input and noted the only thing he could ask for is maybe some signage in the neighborhood to encourage people to drive slower.

Beth Sanchez, Silvia Drive (via Zoom), addressed the Council and stated she doesn't feel pushing something from some peoples yard into hers is a good solution or compromise. She stated this plan wasn't in the Comprehensive Plan for the City and feels it isn't a fair deal.

Travis Olson, 1439 Sophia Drive, addressed the Council and stated he would like to see tree preservation taken into consideration during the development of this site. He stated he feels there were many mistakes made in the previous phases of this plan and as a result the developer has more work to do now to make it right. He stated they previously discussed putting in a walkway connection on Sophia Drive that would go across the creek and into the development and they didn't follow through. He noted he would like to see the tot lot situated closer to the development if possible and would also like to know what type of signage they are planning to put in the area.

Council was asked if they can make the cul-de-sacs a little wider so school buses can turn around instead of having to back-up because that is unsafe for everyone especially for the children in the area.

Mayor Windschitl asked if in the plans there was ever a trail on the other side of the creek.

City Planner Hanson stated it was a condition put into place to explore possibly putting a trail in on the other side of the creek; it wasn't something they committed to doing.

Councilmember Huang explained that the trail that comes down off Sophia Drive from the cul-de-sac ends in a roadway because there is no sidewalk that connects it to trail on the other side of the street. He stated safety is a concern for kids coming down that pathway not knowing until they get down the hill that they have to cross a street to get to the other side of the trail. He noted making that trail continue would be important.

City Planner Hanson stated from a policy standpoint they don't include sidewalks in cul-de-sacs so that is not something they have explored previously.

Mayor Windschitl noted he got a letter from the Hartfords, local residents, asking about moving the trail. He stated he wanted to make sure it was addressed that they explored other options and locations for the trail but it came down to the fact that if the trail was moved, they would lose more trees and no one wants that. He noted D.R. Horton has gone above and beyond to help preserve as many trees as possible and they have done everything asked for in that aspect. He stated he appreciates the residents for providing their input and taking part in the process and feels that this plan is workable for everyone.

Councilmember Hubbard stated she echoes Mayor Windschitl and appreciates the feedback and input from the neighbors and residents.

Councilmember Huang stated the good news is from where they started and where they are, this plan has made a lot of progress and while there is room for improvement still, they have overcome a lot of the big issues. He stated they will continue to have the conversations with residents and developers to work out the best solution and maintain the community the residents have come to know.

Councilmember Grau stated he understands the concerns of the residents but he feels this is a good plan overall. He noted he does feel there was a missed opportunity though for them to bring two communities together by way of a trail connection. He stated it is always better to have residents bring forward their concerns and input at these earlier stages when they can ask for changes to a plan than for them to come forward later when they can't do anything, so he thanks everyone who provided their input and thoughts thus far in the process.

Motion by Councilmember Hubbard, second by Councilmember Huang to adopt Resolution No. 2022-42 approving the Preliminary Plat for Oak Creek (PC #2022-20).

Motion by Councilmember Grau, second by Councilmember Hatfield to adopt Ordinance No. 1015 approving the rezoning from Open (O) and Planned Multi-Use District (PMD-15) to Planned Residential District No. 85 (PRD-85).
Motion carried.

8.E. Adopt Resolution 2022-43 and Ordinance 1016, Approving the Preliminary Site & Building Plan, Preliminary Plat, and Rezoning for Clover Ridge Apartments/AV Development/PC #2022-15
City Administrator Podhradsky introduced this item.

City Planner Hanson provided a presentation and overview of this concept plan.

City Administrator Podhradsky noted the reason some of these things are being discussed is to address an issue that some residents had brought forward, stating that they felt that some of these issues were not being addressed by City staff. He stated to make sure the residents know they have reviewed their concerns he asked City Planner Hanson to review some of these details to put their minds at ease. He noted they will notice that in the final plan there will be a variance of setbacks primarily to allow the City to maintain ownership of the wetlands in order to allow them to be maintained to the same standard as the others in the City.

Councilmember Grau asked what the vacancy number is for apartments in Chaska and noted if the City Attorney would like to provide any input on the application of the ordinances in this plan that would be helpful.

Vishal Dutt, AV Development LLC, addressed the Council and stated its low, about 3% for market rate.

Jake Saufley, City Attorney stated the zoning ordinances are adequately in line with the application and noted it is a unique area with the railway and wetlands.

Councilmember Huang asked if they could create a shortcut for the path through the parking lot.

Mr. Dutt stated it is due to the grading of the land in that location. He noted also with those wetlands right there it creates a nice neat opportunity to have it going through that.

Councilmember Hubbard stated she understands these apartments are probably more geared towards single people and not families necessarily, but is wondering if they could maybe look at adding a small children's play area for those few that do have children.

Mr. Dutt stated the children play area did come up during the planning meetings and they are looking into options for that and will bring their concept back for Council review at a later date.

Mayor Windschitl called upon the audience for public input.

Ray Linder, 1401 Clover Preserve Lane, addressed the Council and stated most people within the 350ft of this proposed building didn't get notifications so signage would be a good idea for these type of things. He stated the setback to the trail looks very narrow and the trail is right along the side of the apartments so maybe looking for options on that setback to allow for trees to keep the nature feeling along the trail would be nice. He noted the flat roof on the apartment is going to be the first thing people see coming into Chaska and with the utilities most likely being placed on the roof, it is going to ruin the nice view people see coming into Chaska so he thinks that needs to be considered.

Councilmember Huang stated he does wonder if they can make the building blend in a bit more with the neighborhood. He stated it is a bit jarring to see an apartment building there with a flat roof right there.

City Administrator Podhradsky stated it needs to be noted that this plan was proposed a long time ago, so while it may look different than some of the newer homes and buildings that have been built in recent years, it was part of an original plan that was designed to complement the neighborhood and fit the feel. He stated he understands the need to consider the newer designs but this has been in the works for a very long time and was designed to fit the designs that were established already.

Councilmember Huang stated he thinks it is important to look at the history of the City but times are changing and it is important to look at the current designs and make it fit as best as possible.

City Administrator Podhradsky stated the overall plan for the City is to make the trails and amenities of the City are accessible for everyone, regardless of income or type of housing they live in. He stated it should be noted that if they were to make the roof on the apartments not flat, they would be looking at a larger taller building and no one wants that.

Mr. Dutt stated they have been over ways to use this site many time and explored so many ways to make it work and this was the best way to avoid making the building taller. He stated

he appreciates the input and they will definitely look into more buffering and ways to blend it in as much as possible with the area.

Travis Olson, 1439 Sophia Drive, addressed the Council regarding the setback of 20ft on Clover Ridge Drive, he stated he would ask that they cut the building short so a precedent is not set to allow other future developers to request the same setback.

Beth Sanchez, Sophia Drive, addressed the Council and stated the she stated it was mentioned in the past that they were going to preserve the Kelzer Farm as a historical site so people coming into Chaska could get that look and feel but as it is now the building doesn't fit. She stated she agrees with affordable housing but as they have it now she imagines they can see it from the Kelzer Farm and once they put the apartments in they can't take it back and hopes it is all taken into consideration.

City Administrator Podhradsky stated the part of Kelzer Farm that was part of the discussion Ms. Sanchez is referring to, is not the site adjacent to this site in question. He noted it is the part of Kelzer Farm in a different location.

Councilmember Hubbard stated she walked the area in the site plan the other day to get the neighbors perspective and better understand their concerns. She stated she understands that change is hard for everyone and gets their concerns. She noted the townhomes in the area are already three-stories and have a pitched roof, and while the apartments having a flat roof will have a little bit of a different look than other buildings and homes in the area, it will at least be close in height to the townhomes. She stated the feedback is that the community needs and wants apartments, and it's hard to find a place for them but this isn't the worst location for them. She noted the developers are taking input and looking at ways to make it better and blend it in with the neighborhood as much as possible.

Councilmember Huang echoed Councilmember Hubbard and stated there is a need for this type of housing in the City. He stated there are techniques in the "architectural toolbox" that he would like to ask that the developers take into consideration to minimize the feel of the height of the building and to make it more cohesively tied to other architecture around.

Ray Linder, 1401 Clover Preserve Lane, addressed the Council and stated the location they are discussing right now doesn't have the townhomes across the street like Councilmember Hubbard stated. He stated it is an open area across the street which is why it is important to find a way to keep the nature-like and open space feeling as much as possible there.

Councilmember Hubbard stated she apologizes, Mr. Linder is correct; she was confusing the site location with another in the neighborhood.

Motion by Councilmember Hubbard, second by Councilmember Hatfield to adopt Resolution No. 2022-43 approving the preliminary site and building plan and preliminary plat for Clover Ridge Apartments (PC #2022-15).

Motion by Councilmember Hubbard, second by Councilmember Grau to adopt Ordinance No. 1016 approving the rezoning from Rural (R) to Planned Residential District (PRD-84).
Motion carried.

8.F. Adopt Resolution 2022-46, Approving the Concept Plan of the North Water Treatment Plant
City Administrator Podhradsky introduced and provided some background on this item.

Community Development Director Kabat provided a presentation on this item. He stated the developer is looking for input on what color the roof should be; either grey or red.

Councilmember Hatfield stated she thinks it should be grey to blend in with the other buildings nearby.

Councilmember Huang stated he thinks it should match the Chaska Commons which has a grey roof.

Mayor Windschitl stated he thinks they should do whatever will help blend the building in the most. He noted he doesn't think they necessarily need to advertise that this building is a water treatment plant, so making it look like the others around it will be best.

The consensus of the Council was to have the developer move forward with a grey roof.

Motion by Councilmember Huang, second by Councilmember Hubbard to Motion to adopt resolution 2022-46 approving the North Water Treatment Plant - Concept Plan (PC# 2022-22).
Motion carried.

9. Bills
9.A. Accounts Payable Council Roster 4-18-2022

Council requested further information on page 4, 9, and 19.

City Administrator Podhradsky provided further information regarding those bills.

Motion by Councilmember Huang, second by Councilmember Hatfield to approve the bills as presented. Roll call was taken. Voting aye: Councilmembers Grau, Hatfield, Hubbard, Huang, and Mayor Windschitl. Voting nay: None
Motion carried.

10. Other Business
10.A. City Administrator's Report
10.A.i. Bi-Weekly Report April 18, 2022

City Administrator Podhradsky provided an overview

10.B. Hawk Pride Recap

Councilmember Grau:

- Stated the City of Victoria is potentially putting in a gun range and wanted to bring this issue up so everyone is aware
- Stated the Community Recreation Advisory Board met recently and are moving to quarterly meetings going forward
- Stated Go Timberwolves!

Councilmember Huang:

- Noted several upcoming events: May 7th is Johnathon Spring Clean-up Day and Christmas in May, May 11th 5-9pm at City Square Park Taste of Chaska, May 13th Chaska Bash at the Event Center Fundraiser Chaska HS, May 14h Jonathon Festival of Garage Sales, and July 29th-31st River City Days
- Congratulated Chaska Hawks on their first Robotics Team going to Nationals
- Congratulated Steven Kraus the new Fire Chief
- Noted they are still searching for a CEO position candidate for SouthWest Transit
- Noted he is disappointed Hy-Vee isn't going to be in Chaska

Councilmember Hubbard:

- Noted the Citizen Task Force met recently and she is excited to get things started
- Stated the Human Rights Commission is hosting the Green Card Voices exhibit at the Community Center
- Stated April 21st there is a Community Immigrant Voices Panel at the Chaska Community Center Theatre from 7:00-8:15 pm
- Noted she did a police ride along with Officer/Sgt. Duzan last Saturday thanked him for his time

Councilmember Hatfield:

- Stated there is a Food Distribution Thursday at 12pm
- Stated there is Coffee with a Cop on Saturday at 8:30 am at Red Bench Bakery
- Thanked the Chaska PD for all their help with speed control

Mayor Windschitl:

- Thanked the Leagues of Auxiliary for a great Easter Egg Hunt event
- Thanked Andrew Romine Interim Electrical Director who filled in for a long time and kept everything running seamlessly (City Administrator Podhradsky echoed his sentiments)
- Thanked Kevin Gravalin for filling in as Interim Fire Chief
- Congratulated Steven Kraus as the new Fire Chief
- Stated the Town Course is opening sometime this week
- Noted the water department is doing water hydrant flushing around town
- Stated May 4th is a Work Session primarily with a short regular meeting
- Noted several upcoming holidays: Today is National Lineman's Group Day, May 3rd is Armed Forces Day, May 1st-7th is Municipal Clerks Day, May 11th-17th National Police Week, May 1st-7th is National Teacher Appreciation week, May 4th is National Fire Fighters Day, May 6th-12th is National Nurses week and May 6th is National Nurses Day

11. Adjourn

Motion by Councilmember Grau, second by Councilmember Hatfield to adjourn the meeting at 10:42 pm.
Motion carried.

- MINUTES -
CHASKA ECONOMIC DEVELOPMENT AUTHORITY
APRIL 4, 2022

1. Call to Order
President Windschitl called the meeting to order at 8:33 pm.

2. Roll Call
Roll call was taken. Present: Commissioners Grau, Hubbard, Huang, and President Windschitl.

Absent: Commissioner Hatfield

Also Present: Elise Durbin, Assistant Executive Director and Matt Podhradsky, Executive Director.

3. Agenda
Motion by Commissioner Hubbard, second by Commissioner Huang adopt the agenda as presented.
Motion carried.

4. Minutes
4.A. Approve EDA Meeting Minutes 2-28-2022
Motion by Commissioner Grau, second by Commissioner Hubbard to approve the February 28, 2022 EDA Meeting Minutes.
Motion carried.

5. Discussion Items
5.A. Lease Agreement with NorthStar Regional for Property located at 314 Walnut Street
Assistant Executive Director Durbin presented this item to the Commission and provided some background.

President Windschitl asked if they do a walk-through periodically to make sure it is being properly maintained.

Executive Director Podhradsky stated usually maintenance performs a walk-through of the property when they need to fix something.

Commissioner Hubbard asked if the fact that the lease states it can be extended another 2 years past the initial 5 years, would be an issue if the City decided after the 5 years that they would like to move forward with a new purpose for the property.

Executive Director Podhradsky stated it wouldn't be an issue because there would most likely be a few years of preparation and transitioning that would occur and that is probably the reasoning for that additional 2 years being in the lease.

Motion by Commissioner Hubbard, second by Commissioner Huang authorizing the President and Executive Director to execute the lease agreement with NorthStar Regional pertaining to property located at 314 Walnut Street.
Motion carried.

6. Other Business
None.

7. Adjourn
Motion by Commissioner Grau, second by Commissioner Hubbard to adjourn the meeting at 8:34 pm. Motion carried.

Chaska
Parks and Recreation Commission
Meeting Minutes
March 8, 2022

1. **Call to Order**

   The March 8, 2022 meeting of the Chaska Parks and Recreation Commission was called to order by Vice Chair Jason Branch at 7:00 pm.

2. **Roll Call**

   Attendance: Vice Chair Jason Branch, Donelle Heieie, Georgiann Keyport, Zach Saueressig, and Elizabeth Wyveen, Karli Cich, Terrance Schwerm, and Michael Heuer

   Absent: Chair David Downs

   Staff: Parks and Recreation Director Marshall Grange, Assistant to the Director Mary Monteith, and IS Assistant Michelle Blasko

3. **Adopt Agenda**

   Motion by Wyveen, second by Heieie, to adopt the March 8, 2022 meeting Agenda.

   Roll Call for Approval

4. **Visitor Presentation**

   None in attendance

5. **Approve Previous Meeting Minutes**

   5A. Motion by Saueressig, second by Wyveen, to approve the Chaska Park Board meeting minutes of February 8, 2022.

   Roll Call for Approval

6. **Receive Council and Planning Meeting Minutes**

   6A. Council Minutes January 3, 2022

   6B. Council Minutes January 24, 2022

   6C. Planning Minutes January 12, 2022

   Wynveen discussed Firemen's II park property previously owned by the school district. Grange mentioned it went through the Planning Commission and City Council for discussion. Grange stated the City wants to partner with St. Johns and do a joint neighborhood park serving both the school and the neighborhood. Grange noted the idea is to have a centralized neighborhood park that serves the east side of Highway 41. Saueressig commented that he felt that it currently feels like a private school park. With the fence, it is not a place open to bringing your kids. The next step for the city is to have more formal discussion with St. John's.

Wyveen discussed the proximity of Fire and Ice Festival back-to-back with River City Days making it difficult to get sponsors and volunteers. Wyveen suggested community events be spaced out throughout the year. Grange stated the reason behind Fire and Ice Festival held in the summer is most curling clubs are closed or off during the summer creating major outstate curlers coming to this premiere curling event.

Wyveen suggested date changes for River City days be a priority in 2023. Grange mentioned other events do occur approximately once a month throughout the year. A lot happens during those 12 weeks of summer.

Keyport noted some discussion recently specific to the border of Chaska and Chanhassen, where the pickle factory was. That area could use some more parks. Grange, not sure what is going in there, however, most of that land falls in Chanhassen. May be a possible park there requiring coordination between the two cities.

7. Discussion Items

7A. Introduction of New Commissioners

Grange introduced the new Commissioners, Schwerm and Heuer. Vice Chair Branch thanked them for volunteering and is looking forward to working together.

Schwerm worked 40 years in local government as a city manager and recently moved to Chaska. Is excited to volunteer on this commission after retiring.

Heuer has lived in Chaska 7 years, works for Lifetime Fitness and coaches competitive soccer for CCC United. Hoyer stated he is looking forward to serving on the board.

Grange thanked them for volunteering and looks forward to working with them. Grange also provided an update on the youth representative position. He stated they interviewed 2 applicants on February 28th and one more last night. Ultimately, Roda Hassan was chosen, and we will welcome her at the meeting in April.

7B. Community Center Master Plan Update

Grange stated he provided the City Council on February 28th an update and presentation seeking approval of the recommendation of Perkins and Will as the lead architect. City Council passed the motion.

Heieie commented how refreshing it is to see community members so excited about this plan. Grange stated they received 37 applications, they then narrowed down to 16. They interviewed and then recommended 8; 4 non community members and 4 community members. Wyveen wondered if anything surprised Grange and the interview committee. Heieie stated it was nice to hear different perspectives. Saueressig noted how people had paid attention and knew the history of the CCC.

Grange discussed the project management team, stating 11 staff from across all departments met with Perkins and Will last week to discuss schedules and share staff opinions on program offerings. Grange also noted Perkins and Will plan to send out some sub consultants to do some

more thorough analysis of the building and surrounding areas. April 14th will be the first citizen task force meeting.

Heuer wondered about a timeline. Grange stated the planning will take 8-10 months, that will include several focus groups and ultimately landing on a concept with estimated costs to be approved by City Council. The next step will be to discuss a financial strategy.

7C. Facility Naming Rights and Sponsorship Update

Grange stated history of this for the new members, has spent 6-8 months looking at revenue as it related to naming rights and sponsorship. City Council approved staff to enter into a contract with Superlative Group. They will work with the City to help see potential opportunities. We just are kicking this project off. Grange noted next Tuesday they will be on site to tour and take pictures and will put together an evaluation report. This report will tell the City the potential revenue of the various locations. City Council will decide on behalf of the Parks and Recreation Board if we move forward.

7D. Pedestrian and Bicycle Master Plan Update

Grange shared again with new members, he has been working for a year on this and have had various community engagements, working with the project steering committee and the city staff project management team. Grange noted the draft has been completed but needs 2-3 weeks for internal staff review including Communications Director Kevin Wright before it is out for public review. This could lend itself to some sort of public review. Wyveen mentioned reconsidering the public review process to include an open house or have a booth at Taste of Chaska.

7E. Department Happenings

Grange stated the concept plan for the Big Woods went through the Planning Commission and was approved by City Council at the February 28th meeting. Many items still need to be worked out before the developer comes back with a preliminary estimate but administration entered into a letter of agreement.

Grange shared he is working with Carver County public works to submit a grant application for a portion of a regional trail. In previous plans, the regional trail in MET Council plans was to follow Highway 41 going north. Chaska suggested to relocate the trail west and follow the existing ravine trail that follows the lakes and to build an underpass below the railroad. Maximum grant money allowed is 5.5 million but will mostly be consumed by the underpass. Heieie wondered about the plan for the new development in Oak Ridge conference center and how much easement the city has. Grange thinks the City does not own much beyond the outside limits of the trail. Grange stated the grant application is due April 15th but working with the County to receive community feedback through a survey. If the grant is awarded, the project would begin in 2026-2027.

Grange mentioned the Spring/ Summer Community Guide will be out March 21st. He also noted the Prairie Fire Children's theater will be open over spring break and Parks and Recreation will have a parent night out March 11 and April 8th from 5:00-8:30 p.m.

Parks and Recreation are offering an Iron Fit challenge March 1-31. Grange also noted the Arts Consortium will hold a green card touring exhibit with a reception on April 14th from 6:30-8:30 p.m.

Vice Chair Branch wondered if there are more spectating spots for curling events other than the restaurant. Grange stated the City is trying to expand the player's lounge in order to host larger events.

Saueressig wondered if any work has been done to create synergy between Community Ed and the school offerings for families. Grange stated it is on the list and thinks it would be a good way to maximize opportunities for families creating a more efficient way to offer programs that are similar.

8. Other Business

8A. Commissioner Round Table

Vice Chair Branch had nothing to report.

Heuer noted he is eagerly waiting to get on the soccer field.

Cich took a drive around Sunset Park.

Heieie had nothing to report.

Keyport mentioned the Chaska Loop was listed in Golf Magazine. She also noted she has been doing the paddle club event for 5 years now and continues to be surprised by the large number of lakes in the area.

Saueressig expressed his appreciation for the staff at the Community Center.

Schwerm noted he received good feedback on the pickle ball event at the Community Center.

Wyveen thanked the public works department for plowing and ensuring sidewalks and paths were salted for residents to walk or run. She heard good things from many in her neighborhood. Wyveen stated she saw a community email to drive anticipation for The Loop's opening fall of 2022. Lots of videos out there, getting excited!

9. Adjourn Meeting

Motion to Adjourn the March 8, 2022, meeting by Wynveen, second by Heuer.

Roll Call to Adjourn at 8:10 p.m.

Next meeting: April 12, 2022