Zoom Option

In order to practice social distancing related to the COVID-19 pandemic, the Chaska City Council meeting on Monday, December 7, 2020 will be held **virtually on a platform called Zoom.** To learn more about participating or watching the meetings, visit www.chaskamn.com. Any questions about how to participate should be directed to the Chaska Communication Department at communications@chaskamn.com or (952)448-9200.

AGENDA
CHASKA CITY COUNCIL
ZOOM
Monday, December 07, 2020
7:00 PM

1. Call to Order
2. Pledge of Allegiance
3. Roll Call
4. Adopt Agenda
5. Visitor Presentation
   - 5.A. Beyond New Beginnings Update - Russell St. John
6. Consent Items
   - 6.A. Adopt Resolution 2020-93, Designate Polling Locations
   - 6.B. 2021 Business License Renewals
   - 6.C. Approve Second Amendment to Site Agreement with T-Mobile at 123 Jonathan Blvd

7. Action Items

    7.A. Truth in Taxation Public Hearing

    7.B. Adopt Resolutions 2020-94 and 2020-95 Issuance and Sale of Bonds: Series 2020F and Series 2021A

    7.C. Adopt Resolution 2020-96 Approving Professional Engineering Services Agreement for the TH 41/CSAH 44 Improvements

8. Bills

    8.A. ACCOUNTS PAYABLE COUNCIL ROSTER 12-7-2020

9. Other Business

    9.A. City Administrator's Report

    9.B. Biweekly 12-7-2020

10. Adjourn

UPDATE TO CHASKA CITY COUNCIL

December 7, 2020

Beyond NEW BEGINNINGS

MISSION STATEMENT

Beyond New Beginnings (BNB) Program supports and nurtures young moms and their children as they gain self-sufficiency in safe, stable housing while being actively involved in the New Beginnings High School Program, post-secondary education and/or employment in order to become healthy, contributing members of our community.

Beyond NEW BEGINNINGS

WHY IS THIS IMPORTANT?

- **ISSUE:** Young mothers/mothers-to-be struggle with homelessness
  - Need in Carver County for 8 places (minimum) for mothers and child
- **IMPACT:** Lack of housing inhibits their ability to support their children as they work towards self-sufficiency
  - Social implications range from poverty to poor health & nutrition to safety concerns
  - Potential for trafficking/abuse/dependency/failure at school/inability to parent child
- **MITIGATION:** Strong need for community to develop safe housing for moms and their children ensuring success in the next step of their lives
  - Provide dedicated housing with occupancy by Fall 2020 (Phase 1)
  - Include 'wrap-around services' (e.g. child care, social services, public health and mental health)
  - Commit to support beyond high school graduation – support to launch (through college, technical school, job training) – transformative and empowering

Solution: Beyond New Beginnings Program (BNB)
"Where young moms & their children build resilience & success"

Beyond NEW BEGINNINGS

OBJECTIVES

- Develop safe housing for young moms and their children both during high school and after graduation — ensuring success in the next step of their lives whether pursuing employment or continuing their education
- Provide access to high-quality childcare where their children can thrive
- Prepare moms and advocate for them as they find employment and/or pursue post-secondary education
- Create a community environment where life skills are honed, and peers support each other through life's ups and downs
- Empower these young moms to be able to support their family once they complete the BNB program
- Participants in BNB must be at least 18 years old and either be enrolled in the New Beginnings High School Program or have graduated from there
- We are building on the skills and services that students have had at New Beginnings
- Support will be available through mental health services, public health, social services, career development, money management, parenting and nutrition
- We hope to be able to have our first BNB family in the house in Q4 2020. Once we move four families into the Phase 1 location

Beyond NEW BEGINNINGS

THE BUSINESS SIDE

- Community response to BNB is hugely supportive – “We will embrace this”
- Phase 1 is well underway, starting with four, two -bedroom apartments in a home in downtown Chaska
- Accomplished in cooperation with the Carver County Community Development Agency (CDA). Legal agreement complete
- 501(c)3 nonprofit corporation formed; EIN received; Solicitation approval by Atty General and Tax exemptions filed; expect approval soon
- Committed Board of Directors in place
- 2020/2021 budgets established - $75,000 gives BNB margins for contingencies
- Liability insurance in place
- Branding in progress (pro bono): includes website development, templates, logos, etc. Expect complete in next two weeks
- Program advocacy sought from Carver County, cities, churches, local businesses, individuals
- Chaska PD performed security assessment with action items (building already to city code)
- Legal reviews complete for documents and risk mitigation
- Internet/video security defined – installation in two weeks
- Fundraising started
  - $31,500 received, more committed
  - Social media / Go Fund Me to start in earnest in December

Beyond NEW BEGINNINGS

PHASE 1 HOME

- N Walnut St and 2nd in Chaska
- Four apartment units
- Two bedrooms each
- Large common area with kitchen & restroom
- Just blocks from the school
- Close to amenities
  - Park
  - Grocery store
  - Pharmacy
  - Transportation
- County covers insurance, maintenance, leases, heat
- Four vouchers provided by State of Minnesota

THE EMPOWERMENT SIDE

- House leader hired
- Empowerment program development complete in partnership with myHealth
- Mentor program developed & mentors recruited & trained
- Furniture plan developed and in execution (Grace Church, FurniShare-LoveINC, donors)
- Students for two of the four apartments identified & committed
- Bountiful Basket committed to providing ongoing food support
- Orientation started 11/16!

Beyond NEW BEGINNINGS

STUDENTS MOVED INTO THE HOME WEDNESDAY!

NEXT STEPS…

- Complete apartment preparation (CDA) & move moms in 12/1
- Complete safety/security recommendation implementation
- Learn & adjust as we gain practical experience
- Complete website, Facebook page, Go Fund Me site
- Continue fund raising on a community scale (as many supporters as possible)
- Develop strategy for spring yard development (fencing/play area/etc.)
- Continue to identify volunteer activities
  - Remodeling/painting large group space
  - Host meals
  - Install the playground/fence
  - Mentoring

Beyond NEW BEGINNINGS

GRATITUDE

The Board of New Beginnings wants to thank everyone for their support

Chaska & Carver County truly is a great place to live

Beyond NEW BEGINNINGS

REQUEST FOR ACTION
CHASKA CITY COUNCIL
12/7/2020

Subject: **Designating Polling Place Locations for 2021**

Prepared By: Denise Beebe, Senior Clerk

Minnesota State Statute 204B.16 Subdivision 1 requires that by December 31 of each year, the governing body of each municipality designate by ordinance or resolution a polling place for each election precinct/ward for the following calendar year.

The City of Chaska currently has the following wards and locations:

Ward	Location
1	Chaska Moravian Church, 115 East 4th Street
2	Christ Victorious Lutheran Church, 9860 Shady Oak Rd
3	Church on the Hill, 952 Trumble Street
4	Chaska Community Center (Brick Conference Room), 1661 Park Ridge Drive

Staff recommends all polling locations remain as is.

CITY COUNCIL ACTION REQUESTED

Motion to approve Resolution No. 2020-93 Designating Polling Place Locations for 2021 Elections.

CITY OF CHASKA
CARVER COUNTY, MINNESOTA

RESOLUTION

DATE 12/7/2020 RESOLUTION NO. 2020-93

MOTION BY COUNCILMEMBER_____ SECOND BY COUNCILMEMBER_____

Resolution Designating Polling Place Locations for 2021 Elections

---

WHEREAS, Minnesota State Statute 204B.16 Subdivision 1 requires that by December 31 of each year, the governing body of each municipality designate by ordinance or resolution a polling place for each election precinct/ward for the following calendar year.

NOW THEREFORE, BE IT RESOLVED by the City Council of the City of Chaska, Minnesota, that the following polling places are designated for each election ward in 2021:

Ward	Location
1	Chaska Moravian Church, 115 East 4th Street
2	Christ Victorious Lutheran Church, 9860 Shady Oak Rd
3	Church on the Hill, 952 Trumble Street
4	Chaska Community Center (Brick Conference Room), 1661 Park Ridge Drive

Passed and adopted by the City Council of the City of Chaska, Minnesota, this 7th day of December 2020.

_____
Mark Windschitl, Mayor

Attest:_____
Deputy Clerk

REQUEST FOR ACTION
CHASKA CITY COUNCIL
12/7/2020

Subject: 2021 Business License Renewals

Prepared By: Denise Beebe, Senior Clerk

Business License Renewals:
It is time to renew all annual business licenses, apart from alcohol, transient accommodation, solicitor/peddler/transient and golf cart permits for the upcoming business license period beginning January 1, 2021 and ending December 31, 2021.

The businesses we license are Games of Skill, Refuse Haulers, Massage Therapists, Massage Therapy Commercial Business Sites, and Tobacco Sales.

All licenses/registrations are set forth and listed below. The fees remain the same as last year. All businesses/individuals who had licenses last year were contacted by mail and requested to return their renewal paperwork by November 20th. The following businesses/individuals have returned their paperwork and payments. In 2020 there were 7 refuse haulers utilizing a total of 86 trucks, 17 businesses selling tobacco, 3 games of skill vendors servicing 8 locations, 2 massage therapy business license, and 4 individual licensed massage therapists. In additional there was a total of 87 solicitors, 2 peddlers, 25 transient permits, 4 transient accommodation licenses due to one business selling out to another and new starting in 2020 were golf cart permits with a total of 44 sold.

2021 Business Applicants and Fees:
The following is the list of businesses requesting permits as of December 4, 2020, for the year 2021. All the refuse haulers and game of skill application renewals have been received. I am waiting for 3 tobacco and all massage therapists and massage therapy business renewal applications. I expect these renewals to follow and will update the Council.

Refuse Haulers: $56 per vehicle
Aspen Waste Systems – 4 Vehicles
Curbside Waste Inc. – 1 Vehicle
Dick's Sanitation Service – 5 Vehicles
Randy's Sanitation – 25 Vehicles
Republic Services – 25 Vehicles
Suburban Waste – 6 Vehicles
Waste Management – 7 Vehicles

Games of Skill: $16 per unit/$16 site
Superior Vending - $144
Theisen Vending - $160
Mendota Valley Amusement – $384

Massage Therapists: $112.00
None at this time.

Massage Therapy Business $300
None at this time.

Tobacco Licenses: $222
Chaser's Beverage Center
Chaska Market
Cooper's Foods
Cub Foods
Cy's Liquors
Dolce Vita Wine Shop
Hazeltine Golf Course

Kwik Trip
Oak 19
River City Liquors
Speedway 4507
Speedway 4519
Walgreens
Chaska Smoke Shop
Downtown Smoke Shop

Solicitors/Peddlers/Transients: $100
As of 12-04-20 = $10,800
(Some fees are waived due to City/CCC hosted events)

Golf Cart Permits: $30
As of 12-04-2020 =$1,320

Transient Accommodations: $300
Oak Ridge Conference Center
Super 8
Norwood Inn
TownSquare Place

Total Revenue as of 12-4-20

Refuse Haulers -	**$ 4,088**
Tobacco Venders -	**$ 3,330**
Games of Skill -	**$ 688**
Massage Therapy -	**$ 0**
Solicitors etc.	**$10,800**
Transient Accommodations	**$ 1,200**
Golf Cart Permits	**$ 1,320**
Grand Total:	**$21,426**

CITY COUNCIL ACTION REQUESTED

Motion to approve the 2021 Business Licenses to include games of skill, refuse haulers, massage therapists, and tobacco sales along with our other permits for solicitors/peddlers/transients and golf carts effective January 1, 2021 through December 31, 2021.

Site: A1P0059A
Site Name: Chaska
Market MN

SECOND AMENDMENT TO SITE AGREEMENT

THIS SECOND AMENDMENT TO SITE AGREEMENT ("Second Amendment") is made and entered into by and between the City of Chaska, a Minnesota municipal corporation ("Owner"), and T-Mobile Central LLC, a Delaware limited liability company, as successor in interest to APT Minneapolis, Inc., a Delaware limited liability company ("Tenant," previously designated as "APT").

Recitals

The parties hereto recite, declare and agree as follows:

A. Owner and Tenant (or as applicable, their respective predecessors in interest) entered into a Site Agreement dated November 8, 1996, as amended by the First Amendment to Site Agreement dated January 14, 2015 ("First Amendment) (collectively, the "Agreement"), whereby Owner leased to Tenant a certain portion of the property (the "Premises") located at 123 Jonathon Boulevard, Chaska, MN 55318 (the "Property").

B. Owner and Tenant desire to enter into this Second Amendment in order to modify and amend certain provisions of the Agreement.

NOW, THEREFORE, in consideration of the mutual covenants and agreements herein contained and other good and valuable consideration, the receipt and sufficiency of which are hereby acknowledged, Owner and Tenant covenant and agree as follows:

1. Modification of Term. The Agreement shall be amended to provide a New Initial Term of Five (5) years ("New Initial Term"), commencing on January 1st, 2021 and the Term will be automatically renewed for up to Five (5) additional Five (5) year terms (each a "Renewal Term") without further action by Tenant.

2. Modification of Rent. The Agreement shall be amended to require a new Initial Annual Rent of $36,500 effective on the commencement of the New Initial Term.

3. Modification of Maintenance and Improvement Expenses. The Agreement shall be amended to provide that if the Tenant fails to move Tenant's equipment in response to the Owner's 120 day written notice of intent to paint the water tower, the Tenant will be held liable for any additional expenses reasonably incurred by Owner due to project delay.

4. Modification of Premises. Tenant may modify the Premises as described and depicted in Exhibit "A-1", attached hereto and by this reference incorporated herein, which modification shall be considered part of the "Communications Facility" under the Agreement.

5. Emergency Personnel Reimbursement. If due to an emergency with the communications facilities located on the Premises, Tenant requires that Owner have one or more of its employees meet with the Tenant outside of regular business hours of 7:00 a.m. to 3:00 p.m., Tenant shall reimburse Owner the then-current hourly wages of each of Owner's employees meeting on the Premises for the time each such employee was at the Premises, but in any event there shall be a three (3) hour minimum for each such employee. If Owner's presence on the Premises is not needed, but Tenant needs to call Owner

outside of the aforementioned regular business hours for Agreement related issues, Tenant shall reimburse Owner the then-current hourly wages of the Owner's employees answering such call for the duration of the call. There shall be a minimum of 1 hour billed for such a call. Tenant shall reimburse Owner for such wages within thirty (30) days after receipt of a written invoice for same, which invoice shall include the names of each such employee and the time the employee was on the Premises or on a call.

6. Incorporation of Previous Terms. The terms and conditions of the Agreement are incorporated herein by this reference, and capitalized terms used in this Second Amendment shall have the same meanings such terms are given in the Agreement. Except as specifically set forth herein, this Second Amendment shall in no way modify, alter, or amend the remaining terms of the Agreement, all of which are ratified by the parties and shall remain in full force and effect. To the extent there is any conflict between the terms and conditions of the Agreement and this Second Amendment, the terms and conditions of this Second Amendment will govern and control.

7. No Further Third Party Consent Required. Owner represents and warrants to Tenant that the consent or approval of no third party, including, without limitation, a lender, is required with respect to the execution of this Second Amendment, or if any such third party consent or approval is required, Owner has obtained any and all such consents or approvals.

8. This Second Amendment may be executed in duplicate counterparts, each of which will be deemed an original.

IN WITNESS WHEREOF, the parties have executed this Second Amendment effective as of the date of execution by the last party to sign.

City of Chaska, a Minnesota municipal corporation

By:_____
Name:_____
Title:_____
Date:_____

T-Mobile Central LLC, a Delaware limited liability company

DocuSigned by:
04AF77EF69E34FE...
By:_____
Name: Kim Curtis
Title: Regional Director, Development.
Date: 12/4/2020

TMO Legal 2020.12.02 16:04:36 -05'00'

Approved

DocuSign Envelope ID: 71E946B1-4FE5-4610-8EA4-C67925FC49CF

EXHIBIT A-1

Antenna Facilities

[See Attached]

T-Mobile®

PROJECT NAME: 2020 ANCHOR

SITE NAME: CHASKA

SITE ID: A1P0059A

STREET ADDRESS: 123 JONATHON BLVD
CHASKA, MN, 55318

COUNTY: CARVER COUNTY

SITE TYPE: WATER TOWER

T-Mobile
8000 WEST 78TH STREET
SUITE 400
EDINA, MN 55439
PH: (952) 833-4145

TRILEAF
1821 WALDEN OFFICE SQUARE
SUITE 500
SCHAUMBURG, IL 60173
PH: (630) 227-0202 F: (630) 227-1212

Insite inc.
Wireless Consulting Services
1S660 MIDWEST ROAD
SUITE 140
OAKBROOK TERRACE, IL 60181

I hereby certify that this plan, specification, or report was prepared by me or under my direct supervision and that I am a duly Licensed Professional Engineer under the laws of the State of Minnesota

Print Name: ROGER ALLAN ZIMMER
Signature: Roger Allan Zimmer
Date 11.11.20 License # 51980

LOCATION MAP

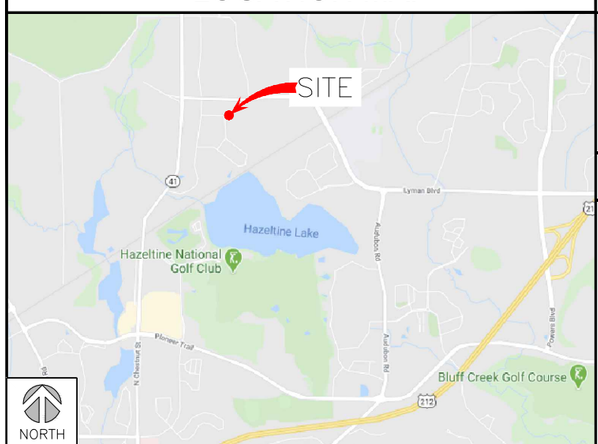

SITE MAP

PROJECT DESCRIPTION

A MODIFICATION TO AN EXISTING UNMANNED T-MOBILE TELECOMMUNICATION FACILITY CONSISTING OF: RFDS DATED: 04/30/2020

EQUIPMENT LEVEL:
- INSTALL (1) HPL3 POWER CABINET & (1) LB3 BATTERY CABINET
- INSTALL (2) AMIAs, (2) ASIKs, (1) ASIB, (1) ABIA, (4) ABIL, & (3) ABIC
- RELOCATE (1) ASIA, (1) FSMF, & (2) ABIAs
- INSTALL (1) HCS 2.0 JUNCTION BOX
- INTSALL (6) SFC4 DIPLEXERS
- REMOVE GENERIC CABINET & ELEVATED TABLE
- REMOVE (1) ESMB & (1) AMOB

ANTENNA LEVEL:
- INSTALL (3) FFHH-65C-R3 & (3) AEHC ANTENNAS
- INSTALL 200' HSC 2.0 TRUNK CABLES
- INSTALL (3) AHLOA & (3) AHFIG RRUs
- INSTALL (1) PENDANT HEAD
- REMOVE FRLB, (3) FXFB, (3) FRIG, & FHFB
- REMOVE (12) GENERIC ANTENNAS

PROPERTY INFORMATION

COORDINATES (NAD 83):

LATITUDE: 44.848389 (44°50'54.2" N)
LONGITUDE: -93.591833 (93°35'30.6" W)

SITE ADDRESS:
123 JONATHON BLVD,
CHASKA, MN 55318

PROPERTY CONTACT INFORMATION:
N/A

DRIVING DIRECTIONS:
DEPART FROM MINNEAPOLIS–SAINT PAUL INTERNATIONAL AIRPORT HEAD HEAD SOUTH ON MN-5 W, MERGE ONTO I-494 W/MN-5 W, TAKE EXIT 11C TO MERGE ONTO MN-5 W/US-212 W, KEEP LEFT TO CONTINUE ON US-212 W, TAKE THE MN-41/CHESTNUT ST EXIT, TURN RIGHT ONTO MN-41 N/N CHESTNUT ST, TURN RIGHT ONTO PEAVEY RD, TURN RIGHT ONTO N JONATHAN BLVD, TURN LEFT AT COLUMBIA CT N, DESTINATION WILL BE ON THE LEFT, 123 N JONATHAN BLVD CHASKA, MN 55318

PHONE COMPANY:
CENTURYLINK
800-244-1111

ELECTRIC COMPANY:
XCEL ENERGY
800-895-4999

PROJECT TEAM

APPLICANT INFORMATION:
T-Mobile
8000 WEST 78TH ST
SUITE 400
EDINA, MN 55439
PHONE: (962) 833-4145

ARCHITECTURAL ENGINEERING FIRM:
TRILEAF
1821 WALDEN OFFICE SQUARE
SUITE 500
SCHAUMBURG, IL 60173
PHONE: (630) 227 0202
FAX: (630) 227-1212

SITE ACQUISITION
Insite inc.
Wireless Consulting Services
1S660 MIDWEST ROAD
SUITE 140
OAKBROOK TERRACE, IL 60181

CODE COMPLIANCE

ALL WORK AND MATERIALS SHALL BE PERFORMED AND INSTALLED IN ACCORDANCE WITH THE CURRENT EDITIONS OF THE FOLLOWING CODES AS ADOPTED BY THE LOCAL GOVERNING AUTHORITIES, NOTHING IN THESE PLANS IS TO BE CONSTRUED TO PERMIT WORK NOT CONFORMING TO THE LATEST EDITIONS OF THE FOLLOWING.

FEDERAL, STATE, LOCAL CODES AND ALL APPLICABLE INDUSTRY STANDARDS
- MINNESOTA STATE BUILDING CODE - 2020
- NATIONAL ELECTRICAL CODE - 2017
- MINNESOTA MECHANICAL AND FUEL GAS CODE - 2020
- MINNESOTA PLUMBING CODE - 2015 (INCLUDING CHAPTER 4714)
- MINNESOTA STATE FIRE CODE - 2020
- MINNESOTA ENERGY CONSERVATION CODE - 2020
- OSHA
- ANSI A10.48
- TIA-322
- TIA-222-H

SHEET INDEX

SHEET NO.	SHEET TITLE	1	2	3	4
T-1.0	TITLE SHEET	●	●	●	
N-1.0	GENERAL NOTES	●	●	●	
N-1.1	GENERAL NOTES (CONTINUED)	●	●	●	
C-1.0	OVERALL SITE PLAN	●	●	●	
C-1.1	EXISTING & PROPOSED EQUIPMENT PLAN	●	●	●	
A-1.0	TOWER ELEVATION	●	●	●	
A-1.1	ANTENNA LAYOUTS	●	●	●	
A-2.0	ANTENNA & EQUIPMENT CONFIG. KEYS	●	●	●	
A-3.0	EQUIPMENT DETAILS	●	●	●	
A-3.1	EQUIPMENT DETAILS	●	●	●	
A-3.1	EQUIPMENT MOUNTING KIT DETAILS			●	
G-1.0	GROUNDING DIAGRAM, DETAILS	●	●	●	
S-1.0	STRUCTURAL DETAILS		●	●	

811 Know what's below. Call before you dig.

TO OBTAIN LOCATION OF PARTICIPANTS UNDERGROUND FACILITIES BEFORE YOU DIG IN MINNESOTA, CALL GOPHER STATE ONE CALL

TOLL FREE: 1-800-252-1166 OR
FAX A LOCATE: 1-800-236-4967

www.gopherstateonecall.org

MINNESOTA STATUTE REQUIRES MIN OF 48 HOURS NOTICE BEFORE YOU EXCAVATE

PENDING APPROVAL OF JURISDICTION, THE FOLLOWING PARTIES HAVE REVIEWED THE DESIGN WITH THEIR FUNCTIONAL RESPONSIBILITIES AND HAVE APPROVED OR REJECTED THIS PROJECT FOR CONSTRUCTION. CONTRACTORS MAY NOT START CONSTRUCTION WITHOUT A NOTICE TO PROCEED (NTP) FROM T-MOBILE.

	PRINT NAME:	SIGNATURE:	APPROVE	REJECT	DATE
REAL ESTATE PM					
CONSTRUCTION PM					
RF ENGINEER					
OPERATIONS					

SITE NAME:
WATER TOWER

SITE ID:
A1P0059A

SITE ADDRESS:
123 JONATHON BLVD
CHASKA, MN 55318

PROJECT NUMBER:
649038

NO.	DATE	REV	REVISIONS	BY	APP
3	11/10/20	-	FINAL CD'S REV 0	JG	RZ
2	08/21/20	-	PRELIMINARY CD'S REV B	JP/BS	RZ
1	05/26/20	-	PRELIMINARY CD'S REV A	JP	RZ

△ REVISION THIS SHEET
ISSUE RECORD
NO REVISION THIS SHEET
THESE DRAWINGS ARE FULL SIZE AND ARE SCALABLE ON 11"X 17" OR 22X34 SHEET SIZE AND ARE NOT REDUCED IN SIZE.

SHEET DESCRIPTION
TITLE SHEET

SHEET NUMBER
T-1.0

GENERAL NOTES

1. ALL PLANS AND SPECIFICATIONS ARE INTENDED TO INCLUDE ALL ITEMS REQUIRED FOR THE PROPER EXECUTION AND COMPLETION OF THIS WORK. ANY ITEM OR WORK MENTIONED IN THE SPECIFICATION AND NOT SHOWN ON THE DRAWINGS, OR SHOWN ON THE DRAWINGS AND NOT MENTIONED IN THE SPECIFICATIONS SHALL BE PROVIDED BY THE CONTRACTOR AS IF INCLUDED IN BOTH.
2. THE DOCUMENTS FOR THIS PROJECT CONSIST OF DRAWINGS, AND SPECIFICATIONS PREPARED BY TRILEAF, INC.
3. THE GENERAL CONTRACTOR SHALL BE RESPONSIBLE FOR SECURING ALL NECESSARY CONTRACT DOCUMENTS, CONSTRUCTION DOCUMENTS, SPECIFICATIONS AND SHOP DRAWINGS, AND ANY OTHER INFORMATION REQUIRED TO COORDINATE ALL INTENDED WORK.
4. THE GENERAL CONTRACTOR SHALL BE RESPONSIBLE FOR SECURING ALL REQUIRED PERMITS, BONDS, OCCUPANCY PERMITS AND FEES.
5. ALL WORK NOTED "BY OTHER" OR "N.I.C." IS TO BE THE RESPONSIBILITY OF THE OWNER AND IS NOT TO BE PART OF THE GENERAL CONTRACTORS, CONSTRUCTION AGREEMENT. THE GENERAL CONTRACTOR SHALL COOPERATE WITH OWNER TO COORDINATE SAID WORK WITH OWNERS CONTRACTOR.
6. THE GENERAL CONTRACTOR SHALL PROVIDE ALL MATERIAL, AND LABOR NECESSARY TO COMPLETE THE WORK AS SPECIFIED IN THESE DRAWINGS AND SPECIFICATION.
7. DO NOT SCALE DRAWINGS. DIMENSIONS GOVERN. LARGER SCALE DETAILS GOVERN OVER SMALLER DETAILS. NOTIFY THE ARCHITECT OR ENGINEER OF ANY CONFLICTS.
8. THE GENERAL CONTRACTOR SHALL VERIFY ALL DIMENSIONS, PROPOSED AND EXISTING CONDITIONS ON THE SITE AND THOSE SHOWN ON THESE DRAWING PRIOR TO ORDERING OR STARTING ANY WORK. GENERAL CONTRACTOR SHALL NOTIFY THE ARCHITECT OR ENGINEER OF ANY DISCREPANCIES, OMISSIONS AND/OR CONFLICTS BEFORE COMMENCEMENT OF ANY WORK.
9. THE GENERAL CONTRACTOR SHALL NOTIFY THE ARCHITECT OR ENGINEER OF ANY DISCREPANCIES BETWEEN THE CONSULTANTS DRAWINGS AND TRILEAF'S DOCUMENTS.
10. NO PLEA OF IGNORANCE ON THE PART OF CONTRACTOR OR SUBCONTRACTOR REGARDING ANY EXISTING CONDITIONS SHALL BE VALID ONCE THE CONTRACT BETWEEN OWNER AND CONTRACTOR HAS BEEN EXECUTED.
11. THE GENERAL CONTRACTOR SHALL BE RESPONSIBLE FOR ALL DAMAGES TO ADJACENT WORK THAT OCCUR, AND SHALL TAKE CARE TO PREVENT DAMAGE TO ALL OTHER TRADES LABOR AND MATERIAL. ALL SHALL REPAIR SUCH DAMAGE AT THEIR OWN EXPENSE. THIS INCLUDES TRACES OF SPLASHES, DROPPINGS, SMUDGES, AND ALL OTHER FOREIGN MATTER FROM ALL WALLS, FLOORS AND CEILINGS.
12. ALL MATERIAL TO BE USED FOR THIS PROJECT SHALL BE STORED IN A LEVEL AND DRY MANNER SO AS NOT TO OBSTRUCT THE COMPLETION OF OTHER WORK.
13. THE GENERAL CONTRACTOR SHALL SECURE ALL REQUIRED SHOP DRAWINGS AND REVIEW THEM FOR ANY ERROR PRIOR TO SUBMITTING THEM TO THE OWNER OR ARCHITECT.
14. THE GENERAL CONTRACTOR SHALL SUBMIT ALL NECESSARY PRODUCT DATA WHICH CLEARLY INDICATES THAT THE PRODUCT MEETS OR EXCEEDS ITEMS SPECIFIED.
15. ALL WORK PERFORMED SHALL CONFORM TO ALL APPLICABLE LOCAL, STATE AND FEDERAL BUILDING CODES IN CASE OF A CONFLICT THE MORE STRINGENT INTERPRETATION SHALL APPLY.
16. CONTRACTOR SHALL BE RESPONSIBLE FOR FOLLOWING ALL LAWS, REGULATIONS, AND RULES PROMULGATED BY FEDERAL STATE AND LOCAL AUTHORITIES WITH JURISDICTION OVER THE SALTIER. THIS RESPONSIBILITY IS IN EFFECT REGARDLESS OF WHETHER THE LAW, ORDINANCE, REGULATION OR RULE IS MENTIONED IN THESE DOCUMENTS.
17. CONTRACTOR SHALL HAVE AND MAINTAIN A VALID CONTRACTOR'S LICENSE FOR THE LOCATION IN WHICH THE WORK IS TO BE PERFORMED. FOR JURISDICTIONS THAT LICENSE INDIVIDUAL TRADES, THE TRADESMAN OR SUBCONTRACTOR PERFORMING THOSE TRADES SHALL BE LICENSED. RESEARCH AND COMPLY WITH THE LICENSING LAWS, PAY LICENSE FEES, AND SELECT AND INFORM SUBCONTRACTORS REGARDING THESE LAWS.
18. FOLLOW ALL APPLICABLE RULES AND REGULATIONS OF THE OCCUPATIONAL SAFETY AND HEALTH ADMINISTRATION AND STATE LAWS BASED IN THE FEDERAL OCCUPATIONAL SAFETY AND HEALTH ACT. THESE REGULATIONS INCLUDE, BUT ARE NOT LIMITED TO, REGULATIONS DEALING WITH TOWER CONSTRUCTION AND SAFETY, EXCAVATIONS AND TRENCHING, AND WORK IN CONFINED SPACES. ENSURE THAT EMPLOYEES AND SUBCONTRACTORS WEAR HARD HATS AT ALL TIMES DURING CONSTRUCTION.
19. PROVIDE PHOTOGRAPHIC EVIDENCE OF ALL FOUNDATION INSTALLATION, GROUNDING, AND TRENCHING AFTER PLACEMENT OF UTILITIES PRIOR TO BACKFILL.
20. CONTRACTOR SHALL SUBMIT CONSTRUCTION DOCUMENTS TO THE JURISDICTIONAL AUTHORITY FOR PLAN CHECK AND REVIEW. CONTRACTOR WILL SUBMIT LICENSING AND WORKMAN'S COMPENSATION INFORMATION TO THE JURISDICTION AS REQUIRED TO OBTAIN THE BUILDING PERMIT, CONTRACTOR SHALL COORDINATE AND SCHEDULE REQUIRED INSPECTIONS AND POST REQUIRED PERMITS AT THE JOB SITE. COMPLY WITH SPECIFIC PROJECT RELATED REQUESTS AND SUGGESTION MADE BY BUILDING INSPECTOR, AND INFORM CONSTRUCTION MANAGER OF ANY SUCH WORK THAT MAY BE BEYOND THE SCOPE OF THE CONTRACT OR DEVIATE FROM THE CONSTRUCTION DOCUMENTS, T-MOBILE WILL REIMBURSE THE CONTRACTOR FOR FEES, FOR PLAN REVIEW, BUILDING PERMIT. CONNECTIONS, AND INSPECTION. (INCLUDED IN THE BASE PROPOSAL).
21. CONTRACTOR SHALL SUBMIT FOR AND OBTAIN All ZONING AND CONDITIONAL USE PERMITS, SOME USE PERMITS MAY HAVE SPECIFIC REQUIREMENTS FOR THE SITE RELATED TO CONSTRUCTION, SUCH AS NOISE REGULATIONS, HOURS OF WORK. ACCESS LIMITATIONS, ETC. THE CONSTRUCTION MANAGER WILL INFORM THE CONTRACTOR OF THESE REQUIREMENTS AT THE PRE-BID MEETING OR AS SHOWN IN THE CONSTRUCTION DOCUMENTS.
22. OBTAIN PERMITS AND PAY FEES RELATED TO ELECTRICAL WORK PERFORMED ON THIS PROJECT. DELIVER COPIES OF ALL PERMITS TO T-MOBILE.
23. SCHEDULE AND ATTEND INSPECTIONS RELATED TO ELECTRICAL WORK REQUIRED BY JURISDICTION HAVING AUTHORITY. CORRECT AND PAY FOR ANY WORK REQUIRED TO PASS ANY FAILED INSPECTION.
24. PROVIDE TWO COPIES OF OPERATION AND MAINTENANCE MANUALS IN THREE-RING BINDER.
25. FURNISH AND INSTALL THE COMPLETE ELECTRICAL SYSTEM, FIBER SYSTEM, AND THE GROUNDING SYSTEM AS SHOWN ON THESE DRAWINGS.
26. ALL WORK SHALL BE PERFORMED IN STRICT ACCORDANCE WITH ALL APPLICABLE BUILDING CODES AND LOCAL ORDINANCES. INSTALLED IN A NEAT MANNER AND SHALL BE SUBJECT TO APPROVAL BY T-MOBILE.
27. CONDUCT A PRE-CONSTRUCTION SITE VISIT AND VERIFY EXISTING SITE CONDITIONS AFFECTING THIS WORK. REPORT ANY OMISSIONS OR DISCREPANCIES FOR CLARIFICATION PRIOR TO THE START OF CONSTRUCTION.
28. PROTECT ADJACENT STRUCTURES AND FINISHES FROM DAMAGE. REPAIR TO ORIGINAL CONDITION ANY DAMAGED AREA.
29. REMOVE DEBRIS ON A DAILY BASIS. DEBRIS NOT REMOVED IN A TIMELY FASHION WILL BE REMOVED BY OTHERS AND THE RESPONSIBLE SUBCONTRACTOR SHALL BE CHARGED ACCORDINGLY. REMOVAL OF DEBRIS SHALL BE COORDINATED WITH THE SITE OWNERS REPRESENTATIVE. DEBRIS SHALL BE REMOVED FROM THE PROPERTY AND DISPOSED OF LEGALLY. USE OF THE PROPERTY'S DUMPSTER IS PROHIBITED.
30. CONTRACTOR TO CONFIRM AVAILABLE CAPACITY AT EXISTING UTILITY PEDESTAL AND ADVISE ENGINEER OF SERVICE SIZE AND FAULT CURRENT LEVEL.
31. IF PEDESTAL DOES NOT HAVE ADEQUATE CAPACITY, CONTRACTOR TO SUBMIT COST QUOTATION TO UPGRADE. UPON APPROVAL OF SUBMITTED COST QUOTATION, THE CONTRACTOR SHALL PROVIDE PROPOSED SERVICE AND/ OR UPGRADE SERVICE. FEEDERS AND EQUIPMENT/ ELECTRODE GROUNDING CONDUCTORS SIZE ACCORDINGLY.
32. CONTRACTOR SHALL VERIFY SEPARATION DIMENSION BETWEEN POWER COMPANY ELECTRICAL CONDUITS AND LP GAS PIPES AS PER UTILITY COMPANY. LOCAL CODES, NEC, NFPA, AND GAS TANK MANUFACTURER'S SPECIFICATION.
33. CONTRACTOR SHALL VERIFY THAT THE TOTAL NUMBER OF SERVICE ENTRANCE DISCONNECTS IN THE EXISTING UTILITY COMPANY PEDESTAL MUST NOT EXCEED SIX. IF THE PROPOSED SERVICE ADDED EXCEEDS THIS VALUE, CONTRACTOR MUST COORDINATE WITH THE UTILITY COMPANY AND AUTHORITY HAVING JURISDICTION. THE RUNNING OF AN ADDITIONAL EXCLUSIVE AND DEDICATED SERVICE LATERAL SET FOR THE PROPOSED LOAD ADDED TO THE COMPOUND AS PER NEC ARTICLE 230-2 (B).
34. THE EQUIPMENT/ PROTECTIONS MUST BE RATED FOR STANDARD AIC RATE HIGHER THAN INCOMING EQUIPMENT AND/ OR UTILITY COMPANY AIC RATE.

CONSTRUCTION ADMINISTRATION

1. PRIOR TO STARTING CONSTRUCTION GENERAL CONTRACTOR SHALL ASSIGN A PROJECT MANAGER THAT WILL BE RESPONSIBLE FOR THE COORDINATION AND SCHEDULING OF ALL WORK. THIS PROJECT MANAGER SHALL BE THE SINGLE CONTACT PERSON FOR ALL PERSONNEL WORKING ON THIS PROJECT. PRIOR TO THE START OF THIS PROJECT THE PROJECT MANAGER SHALL SCHEDULE A ON-SITE MEETING WITH ALL CONTRACTORS INVOLVED IN THIS PROJECT.
2. PRIOR TO STARTING CONSTRUCTION THE GENERAL CONTRACTOR SHALL SUBMIT A CONSTRUCTION SCHEDULE TO THE OWNER AND TRILEAF'S REPRESENTATIVE FOR THEIR REVIEW.
3. THE GENERAL CONTRACTOR SHALL BE RESPONSIBLE FOR KEEPING DAILY PROGRESS REPORTS THAT, INCLUDE ALL CONTRACTORS WORKING ON THE JOB SITE, MATERIALS ON SITE AND WEATHER CONDITIONS. THE GENERAL CONTRACTOR SHALL PROVIDE A WRITTEN WEEKLY REPORT TO THE OWNER AND TRILEAF FOR REVIEW.
4. THE GENERAL CONTRACTOR SHALL BE RESPONSIBLE FOR FOLLOWING ALL OSHA, AND WPCS SAFETY REQUIREMENTS DURING CONSTRUCTION.
5. PRIOR TO POURING ANY CONCRETE, TOWER ERECTIONS OR TELECOM. EQUIPMENT BEING DONE, THE GENERAL CONTRACTOR SHALL PROVIDE THE PROJECT MANAGER AND TRILEAF WITH 48 HOUR NOTICE.
6. EACH SUBCONTRACTOR SHALL BE RESPONSIBLE FOR DAILY CLEAN UP OF ALL MATERIAL AND DEBRIS.
7. THE GENERAL CONTRACTOR SHALL BE RESPONSIBLE FOR SCHEDULING ALL NECESSARY INSPECTIONS AS REQUIRED.
8. TRILEAF SHALL NOT HAVE CONTROL OR CHARGE OF AND SHALL NOT BE RESPONSIBLE FOR CONSTRUCTION MEANS, MATERIAL AND / OR METHODS OTHER THEN WHAT IS SHOWN ON THESE DRAWINGS AND SPECIFICATIONS
9. THE GENERAL CONTRACTOR SHALL FOR THE DURATION OF THE PROJECT CARRY AND MAINTAIN AT THEIR OWN EXPENSE ALL REQUIRED BONDS AND INSURANCES AS SPECIFIED IN MASTER AGREEMENT AND/OR CONSTRUCTION CONTRACT. THE INSURANCE SHALL LIST THE OWNER AS ADDITIONAL INSURED ON ALL POLICIES.
10. GENERAL CONTRACTOR SHALL PROVIDE WRITTEN PROOF OF ALL REQUIRED BONDS AND INSURANCE.

EXCAVATION AND GRADING

1. GENERAL CONTRACTOR SHALL NOTIFY ALL INSPECTORS AS REQUIRED, PRIOR TO POURING ANY AND ALL CONCRETE.
2. CONTRACTOR SHALL VERIFY ALL FILL MATERIAL REQUIRED WITH LOCAL AND PUBLIC HIGHWAY DEPARTMENTS.
3. ALL CONCRETE SHALL BE PLACED ON UNDISTURBED SOIL WITH A MIN. ALLOWABLE SOIL BEARING CAPACITY OF 3000 LBS PER SQUARE FOOT UNLESS OTHERWISE NOTED.
4. CONTRACTOR SHALL REMOVE ALL ORGANIC MATERIAL TO A MIN. OF 6" BELOW GRADE.
5. REMOVE ALL TREES, BRUSH AND DEBRIS FROM SITE AREA AND ACCESS ROAD RIGHT OF WAY AS REQUIRED.
6. GENERAL CONTRACTOR SHALL REMOVE ALL SOFT SPOTS AND UNSTABLE SOIL CONDITIONS, AND COMPACT TO 85% STANDARD PROCTOR, WHERE NECESSARY PROVIDE STABILIZER MAT PRIOR TO INSTALLING ANY FILL OR BASE MATERIAL.
7. ALL COMPACTING SHALL BE DONE BY MECHANICAL MEANS. LARGER AREAS SHALL USE SHEEPS FOOT, VIBRATORY OR RUBBER TIED ROLLERS, OF AT LEAST 5 TONS. SMALLER AREAS SHALL BE COMPACTED BY POWER DRIVEN HAND HELD TAMPERS. WATER TREATMENT MAY BE REQUIRED TO OBTAIN COMPACTION.
8. ALL EARTH WORK WITH ON SITE MATERIAL SHOULD BE PERFORMED WHEN TEMPERATURES ARE ABOVE FREEZING. FROZEN SOIL SHOULD NOT BE USED BENEATH STRUCTURES. ALL FOUNDATION EXCAVATION MUST BE INSULATED AGAINST FREEZING UNTIL CONSTRUCTION OF FOUNDATION IS COMPLETED.
9. ALL EXCESS SPOILS SHALL BE REMOVED FROM SITE.
10. ALL STONE FILL SHALL BE PLACED IN MAX. 6" LIFTS IN ACCORDANCE WITH ASTM-D1557. WITH 95% PROCTOR UNDER SLABS.
11. IN AREAS OF COMPACTED FILL WITH IN THE FOUNDATION LINE BACKFILLING AGAINST BOTH SIDES OF FOUNDATION SHALL BE DONE AT THE SAME RATE TO PREVENT STRESS AND OVERTURNING OF FOUNDATION.
12. ACCESS ROAD SHALL BE BROUGHT UP TO BASE COURSE LEVEL PRIOR TO PLACING FOUNDATION.
13. ALL SITE GRADING INCLUDING, SWALES, CULVERTS, AND DITCHES SHALL BE PLACED SO THAT NO WATER IS DIRECTED TO ADJACENT SITE.
14. WHERE SITE SLOPES OF ALL FENCED ARES, PARKING AREAS EXCEEDS 2:1, RIPRAP SHALL BE APPLIED TO SLOPED SIDES. ALL CULVERT OPENING SHALL HAVE RIPRAP FOR THE ENTIRE FIRST 6'-0" OF DITCH.
15. ALL GRADING AND EXCAVATION SHALL INCLUDE, GRADING, DITCHING AND BANKING UNLESS OTHERWISE NOTED.
16. AFTER FINAL GRADING, ANY DEPRESSIONS THAT ALLOW PONDING WILL BE REJECTED.
17. THE GENERAL CONTRACTOR SHALL BE RESPONSIBLE FOR THE INSTALLATION OF ALL EROSION CONTROL DEVICES INCLUDING, BUT NOT LIMITED TO, SILT FENCE AROUND THE CONSTRUCTION LIMITS, STONE ACCESS DRIVES, AND FILTER FABRIC PROTECTORS AND STRAW BALES AROUND ALL MANHOLES AND INLETS PER DETAILS.

ANTENNA & TOWER CONSTRUCTION

1. THIS SECTION INCLUDES THE INSTALLATION OF SIDE ARMS, MICROWAVE DISH ANTENNAS, GALVANIZED STEEL ANTENNA MOUNTS, AND WAVEGUIDE BRIDGE AS SHOWN ON THESE DRAWINGS AND SPECIFICATIONS.
2. ANTENNA CONTRACTOR SHALL VERIFY ALL REQUIREMENTS WITH CELL PROVIDERS REPRESENTATIVE PRIOR TO STARTING CONSTRUCTION.
3. PROVIDE MATERIAL AND LABOR TO IN INSULATED GROUND BAR AT EQUIPMENT CABINET. SEE GROUNDING NOTES
4. ANTENNA CONTRACTOR SHALL PERFORM ALL NECESSARY FIELD TEST, INCLUDING SWEEP TEST.
5. THE FOLLOWING REGULATOR AGENCIES APPLY TO THIS SECTION
   - A. EIA ELECTRONIC INDUSTRIES ASSOCIATION TIA/EIA-222-G STRUCTURAL STANDARDS FOR STEEL ANTENNA TOWERS AND ANTENNA SUPPORT STRUCTURES.
   - B. FAA FEDERAL AVIATION ADMINISTRATION ADVISORY CIRCULAR AC 70-7460-IH. OBSTRUCTION MARKING AND LIGHTING. IN ALL CASES PART 77.
   - C. FCC FEDERAL COMMUNICATIONS COMMISSION RULES AND REGULATIONS FORM # 715, OBSTRUCTION MARKING AND LIGHTING SPECIFICATIONS FOR ANTENNA STRUCTURES AND FORM 715A. HIGH INTENSITY OBSTRUCTIONS LIGHTING SPECIFICATIONS FOR ANTENNA STRUCTURES. AND IN ALL CASES PART 17, AND 22.
   - D. AISC AMERICAN INSTITUTE OF STEEL CONSTRUCTION.
   - E. NEC NATIONAL ELECTRICAL CODE, FOR TOWER LIGHTING.
   - F. UL UNDERWRITERS LABORATORIES,
   - G. NFPA-101 LIFE SAFETY CODE.

STRUCTURAL NOTES

1. ALL DESIGN AND CONSTRUCTION SHALL COMPLY WITH THE INTERNATIONAL BUILDING CODE, CURRENT EDITION, AND ANY STATE OR LOCAL CODES THAT APPLY. IF A CONFLICT BETWEEN THE CODES THE MOST RESTRICTIVE CODE APPLIES.
2. DO NOT SCALE DRAWINGS
3. CONTRACTOR SHALL VERIFY ALL EQUIPMENT LOCATIONS AND MOUNT DIMENSIONS PER MANUFACTURES SPECIFICATIONS AND INSTALLATION DRAWINGS PRIOR TO STARTING ANY CONSTRUCTION.
4. CONTRACTOR SHALL PROVIDE A MIN. OF TWO COPIES OF ALL SHOP DRAWINGS TO THE ARCHITECT OR ENGINEER FOR APPROVAL PRIOR TO STARTING ANY INSTALLATION.
5. GENERAL CONTRACTOR SHALL VERIFY ALL DIMENSIONS, ELEVATIONS, SECTIONS AND DETAIL BETWEEN THESE DOCUMENTS AND THE MANUFACTURES SHOP DRAWINGS AND NOTIFY THE ARCHITECT / ENGINEER OF ANY DISCREPANCIE INCONSISTENCIES.
6. CONTRACTOR SHALL BE RESPONSIBLE FOR PROVIDING ALL NECESSARY TEMPORARY BRA SHORING, OR ANY OTHER MEANS TO AVOID EXCESSIVE STRESSES AND TO HOLD STRUCTU ELEMENTS IN PLACE DURING CONSTRUCTION.
7. CONTRACTOR SHALL VERIFY ALL SIZES, LOCAT AND NUMBER OF FLOOR AND ROOF OPENINGS PRIOR TO STARTING ANY WORK.

ELECTRICAL NOTES

1. REFERENCE T-MOBILE STANDARD CONSTRUCTION SPECIFICATIONS FOR WIRELESS SITES FOR GENERAL ELECTRICAL REQUIREMENTS.
2. WIRING SHALL BE AWG STRANDED COPPER WITH THHN OR EQUIVALENT INSULATION. #12 MINIMUM INSTALLED IN "MINIMUM CONDUIT. SIGNAL WIRING BE INSULATED #22 AWG. NO BX OR ROMEX CABLE IS PERMITTED. CONDUITS SHALL BE SURFACE MOUNTED.
3. WIRING DEVICES AND EQUIPMENT SHALL BE UL LISTED SPECIFICATIONS GRADE.
4. MATERIALS SHALL BE PROPOSED AND CONFORM TO THE APPLICABLE STANDARDS ESTABLISHED FOR EACH ITEM BY THE ORGANIZATIONS LISTED BELOW. -AMERICAN SOCIETY FOR TESTING MATERIAL (ASTM) - UNDERWRITER LABORATORY (UL) - NATIONAL ELECTRICAL MANUFACTURING ASSOCIATION (NEMA) - AMERICAN STANDARDS ASSOCIATION (ASA) - NATIONAL FIRE PROTECTION ASSOCIATION ASSOCIATION (NFPA).
5. INSTALLATION OF MATERIALS SHALL COMPLY WITH REGULATIONS OF: -THE NATIONAL ELECTRIC CODE (NFPA 70) - THE NATIONAL ELECTRICAL SAFETY CODE (ANSIC-2) - THE LIFE SAFETY CODE (NFPA 101) - LOCAL BUILDING CODES.
6. THE ENTIRE SYSTEM SHALL BE SOLIDLY GROUNDED USING LOCKOUTS AND BONDING NUTS ON CONDUITS AND PROPERLY BONDED GROUND CONDUCTOR. RECEPTACLES AND EQUIPMENT BRANCH CIRCUITS SHALL BE GROUNDED WITH A FULL-SIZE EQUIPMENT GROUNDING CONDUCTOR RUN IN THE CIRCUITS CONDUIT.
7. OUTLET AND JUNCTION BOXES SHALL BE ZINC-COATED OR CADMIUM PLATED STEEL NOT LESS THAN 4" SQUARE AND SUITABLE FOR THE TYPE SERVICE AND OUTLET. OUTLET AND JUNCTION BOXES SHALL BE SURFACE MOUNTED AND LABELED WITH BRANCH CIRCUIT BREAKER NUMBER.
8. LABEL ALL EQUIPMENT SERVED FROM T-MOBILE PANEL BOARD WITH PHENOLIC LABELS SIZED IN RELATION TO USAGE.
9. INDOOR CONDUCTORS SHALL BE INSTALLED IN EMT UNLESS NOTED OTHERWISE.OUTDOOR CONDUCTORS SHALL BE INSTALLED IN RIGID GALVANIZED STEEL UNLESS NOTED OTHERWISE. WHERE EMT IS USED. IT SHALL BE WITH ONLY LISTED COMPRESSION FITTINGS. NO SET SCREW FITTINGS SHALL BE ALLOWED.

T-Mobile
8000 WEST 78TH STREET
SUITE 400
EDINA, MN 55439
PH: (952) 833-4145

TRILEAF
1821 WALDEN OFFICE SQUARE
SUITE 500
SCHAUMBURG, IL 60173
PH: (630) 227-0202 F: (630) 227-1212

Insite inc.
Wireless Consulting Services
1S660 MIDWEST ROAD
SUITE 140
OAKBROOK TERRACE, IL 60181

I hereby certify that this plan, specification, or report was prepared by me or under my direct supervision and that I am a duly Licensed Professional Engineer under the laws of the State of Minnesota

Print Name: ROGER ALLAN ZIMMER
Signature: Roger Allan Zimmer
Date 11-11-20 License # 51980

SITE NAME:
WATER TOWER

SITE ID:
A1P0059A

SITE ADDRESS:
123 JONATHON BLVD
CHASKA, MN 55318

PROJECT NUMBER:
649038

NO.	DATE	REV	REVISIONS	BY	APP
3	11/10/20	-	FINAL CD'S REV 0	JG	RZ
2	08/21/20	-	PRELIMINARY CD'S REV B	JP/BS	RZ
1	05/26/20	-	PRELIMINARY CD'S REV A	JP	RZ

△ REVISION THIS SHEET
ISSUE RECORD
NO REVISION THIS SHEET
THESE DRAWINGS ARE FULL SIZE AND ARE SCALABLE ON 11"X 17" OR 22X34 SHEET SIZE AND ARE NOT REDUCED IN SIZE.

SHEET DESCRIPTION
GENERAL NOTES

SHEET NUMBER
N-1.0

ELECTRICAL NOTES (CONTINUED)

10. CONTRACTOR IS TO PROVIDE AND INSTALL ENGRAVES LABEL ON THE T-MOBILE METER SOCKET ENCLOSURE

11. CONTRACTOR IS TO OBTAIN ALL PERMITS, PAY PERMITS FEES, AND BE RESPONSIBLE FOR SCHEDULING INSPECTIONS. THE CONTRACTOR IS TO OBTAIN LOCAL POWER AND TELEPHONE COMPANY APPROVAL & COORDINATE WITH UTILITY COMPANIES SERVICE ENTRANCE REQUIREMENTS.

COATING SYSTEMS FOR TELECOMMUNICATION EQUIPMENT

PART 1 GENERAL

1.01 SUMMARY

A. SECTION INCLUDES PAINTING AND PAINTING REPAIR WORK ASSOCIATED WITH THE INSTALLATION OF ANTENNAS, COAXIAL CABLES, AND OTHER COMMON COMPONENTS WITH DIRECT ATTACHMENT TO WATER TANK FACILITIES.

1.02 REFERENCES

A. SOCIETY FOR PROTECTIVE COATINGS (SSPC): WWW.SSPC.ORG

VOLUME 1: GOOD PAINTING PRACTICE

VOLUME 2: SYSTEMS AND SPECIFICATIONS

1.03 SUBMITTALS

A. PRODUCT DATA: SUBMIT DATA SHEET FOR EACH COATING SYSTEM.

PART 2 PRODUCTS

2.01 MATERIALS

A. MANUFACTURERS:

1. SHERWIN WILLIAMS COMPANY WWW.SHERWIN-WILLIAMS.COM
2. TNEMEC COMPANY WWW.TNEMEC.COM
3. X-I-M PRODUCTS WWW.XIMBONDER.COM

PART 3 EXECUTION

3.01 EXAMINATION

A. VISUALLY EVALUATE SURFACE PREPARATION BY COMPARISON WITH PICTORIAL STANDARDS OF SSPC-VIS-1-89.

3.02 PREPARATION

A. REMOVE ALL SURFACE CONTAMINANTS IN ACCORDANCE WITH SSPC-SP1 SOLVENT CLEANING.
   1. DO NOT USE HYDROCARBON SOLVENTS ON SURFACES TO BE COATED WITH WATER-BASED COATINGS.

B. CLEAN AND REMOVE ALL RUST, SLAG, WELD SPLATTER, WELD SCABS, MILL SCALE, AND LOOSE PAINT.

C. PROTECT AREAS ADJACENT TO WELDING & OR GRINDING OPERATIONS TO PREVENT DAMAGE OF SURROUNDING INTACT PAINT SYSTEM.

D. FERROUS METAL: SSPC-SP6 COMMERCIAL BLAST CLEANING

E. GALVANIZED STEEL: SSPC-SP7 BRUSH OFF BLAST

F. ANTENNA COVERS, COAXIAL CABLE, NON-METALLIC SUBSTRATES AND PREVIOUSLY PAINTED SURFACES: SCARIFY TO DEGLOSS. SSPC-SP1 WITH A NON-HYDROCARBON SOLVENT.

G. SURFACE PROFILE SHALL BE IN ACCORDANCE WITH MANUFACTURER'S PRODUCT RECOMMENDATION.

H. RE-BLAST ALL SURFACES:
   1. WHERE RUSTING HAS RECURRED.
   2. THAT DO NOT MEET THE REQUIREMENTS OF THESE SPECIFICATIONS.

3.03 APPLICATION

A. COATINGS SHALL BE APPLIED IN ACCORDANCE WITH MANUFACTURER'S PRINTED INSTRUCTIONS.

B. SURFACES TO BE COATED SHALL BE CLEAN, DRY, AND FREE OF AIRBORNE DUST AND CONTAMINANTS AT THE TIME OF APPLICATION AND WHILE FILM IS FORMING.

C. FINISH COAT SHALL BE UNIFORM IN COLOR AND SHEEN WITHOUT STREAKS, LAPS, RUNS, SAGS OR MISSED AREAS.

D. SHOP PAINTING: TAPE-OFF (2-INCH MINIMUM) SURFACES THAT WILL BE IN THE HEAT-AFFECTED-ZONE DURING FIELD WELDING.

E. COMPONENT PAINTING:
   1. INTERIOR EXPOSED FERROUS METAL AND GALVANIZED STEEL:
      a. PRODUCT: SHERWIN WILLIAMS MACROPOXY 646 OR TNEMEC SERIES 161
         1) NUMBER OF COATS: 2
         2) DRY FILM THICKNESS: 4.0-6.0 MILS (PER COAT)
         3) COLOR: BY OWNER
   2. EXTERIOR EXPOSED FERROUS METAL AND GALVANIZED STEEL:
      a. PRIMER: SHERWIN WILLIAMS MACROPOXY 646 OR TNEMEC SERIES 161 OR N69
         1) NUMBER OF COATS: 1
         2) DRY FILM THICKNESS: 4.0-6.0 MILS
         3) COLOR: BY OWNER
      b. FINISH: SHERWIN WILLIAMS ACROLON 218 OR TNEMEC SERIES 10740/10750
         1) NUMBER OF COATS: 1
         2) DRY FILM THICKNESS: 2.0-3.0 MILS
         3) COLOR: BY OWNER
   3. ANTENNA COVERS:
      a. PRIMER: SHERWIN WILLIAMS PRO-CRYL PRIMER
         1) NUMBER OF COATS: 1
         2) DRY FILM THICKNESS: 2.0-4.0 MILS
      b. FINISH: SHERWIN WILLIAMS SHER-CRYL HPA
         1) NUMBER OF COATS: 1
         2) DRY FILM THICKNESS: 2.5-4.0 MILS
         3) COLOR: BY OWNER
   4. COAXIAL CABLE
      a. PRIMER: X-I-M 1138
         1) NUMBER OF COATS: 1
         2) DRY FILM THICKNESS: 2.0-3.0 MILS
      b. FINISH: SHERWIN WILLIAMS SHER-CRYL HPA
         1) NUMBER OF COATS: 1
         2) DRY FILM THICKNESS: 2.5-4.0 MILS
         3) COLOR BY OWNER

3.04 REPAIR OF AREAS DAMAGED BY WELDING

A. PREPARE THE DAMAGE BY ONE OF THE TWO FOLLOWING METHODS AS DIRECTED BY THE ENGINEER.
   1. ABRASIVE-BLAST TO SSPC-SP6.
   2. MECHANICALLY CLEAN TO SSPC-SP11.

B. FEATHER EDGES TO PROVIDE SMOOTH COATING TRANSITION.

C. APPLY PRIME COAT TO BARE METAL SURFACE.

D. MASK OFF RECTANGULAR AREA AROUND PRIME COAT.

E. APPLY FINISH COAT.

THE EXISTING PAINT SYSTEM ON THE TOWER IS A TNEMEC EPOXY SYSTEM ON THE TANK DRY INTERIOR AND AN EPOXY/URETHANE SYSTEM ON THE TANK EXTERIOR. IF THE EXISTING COATING IS DAMAGED DURING THE ANTENNA OR RADIO SWAP THE PAINT SYSTEM SHOULD BE MATCHED AND TEMPERATURE CONDITIONS MAY NOT BE CONDUCIVE TO DOING THE WORK IF THE PROJECT IS DONE OVER THE WINTER MONTHS

3.05 QUALITY CONTROL

A. MEASURE DRY FILM THICKNESS WITH A MAGNETIC FILM THICKNESS GAGE IN ACCORDANCE WITH SSPC-PA2.

B. VISUALLY INSPECT DRIED FILM FOR FUNS, SAGS, DRY SPRAY, OVERSPRAY, EMBEDDED PARTICLES AND MISSED AREAS.

C. REPAIR DEFECTIVE OR DAMAGED AREAS IN ACCORDANCE WITH ARTICLES 3.02 AND 3.03.

NOTE:
ALL CABLES SHALL BE MANUFACTURED OR CUT TO THE APPROPRIATE LENGTH AND INSTALLED AS NEAT/DISCREETLY AS POSSIBLE.

NOTE:
ALL UNUSED COMPONENTS, CABLES, HARDWARE, ETC. SHALL BE REMOVED FROM THE SITE. MAIN FEEDLINES INCLUDED IN THE CABLE COUNT ON THE SITE LEASE AGREEMENT WILL NOT NEED TO BE REMOVED.

NOTE:
ALL NEW AND EXISTING COMPONENTS/CABLES SHALL BE INSTALLED SO AS NOT TO CREATE A TRIPPING HAZARD OR INTERFERE WITH ACCESS TO THE CLIMBING LADDER, MAN-WAY HATCHES, OR HAND-RAILINGS.

T-Mobile
8000 WEST 78TH STREET
SUITE 400
EDINA, MN 55439
PH: (952) 833-4145

TRILEAF
1821 WALDEN OFFICE SQUARE
SUITE 500
SCHAUMBURG, IL 60173
PH: (630) 227-0202 F: (630) 227-1212

Insite inc.
Wireless Consulting Services
1S660 MIDWEST ROAD
SUITE 140
OAKBROOK TERRACE, IL 60181

I hereby certify that this plan, specification, or report was prepared by me or under my direct supervision and that I am a duly Licensed Professional Engineer under the laws of the State of Minnesota

Print Name: ROGER ALLAN ZIMMER
Signature: Roger Allan Zimmer
Date 11.11.20 License # 51980

SITE NAME:
WATER TOWER

SITE ID:
A1P0059A

SITE ADDRESS:
123 JONATHON BLVD
CHASKA, MN 55318

PROJECT NUMBER:
649038

NO.	DATE	REV.	REVISIONS	BY	APP
3	11/10/20	-	FINAL CD'S REV 0	JG	RZ
2	08/21/20	-	PRELIMINARY CD'S REV B	JP/BS	RZ
1	05/26/20	-	PRELIMINARY CD'S REV A	JP	RZ

ISSUE RECORD
△ REVISION THIS SHEET ✪ NO REVISION THIS SHEET
THESE DRAWINGS ARE FULL SIZE AND ARE SCALABLE ON 11"X 17" OR 22X34 SHEET SIZE AND ARE NOT REDUCED IN SIZE.

SHEET DESCRIPTION
GENERAL NOTES (CONTINUED)

SHEET NUMBER
N-1.1

NOTE:
THESE DRAWINGS WERE PREPARED BASED ON EXISTING DRAWINGS AND INFORMATION PROVIDED BY T-MOBILE. ALL EXISTING CONDITIONS SHOULD BE FIELD VERIFIED PRIOR TO ANY CONSTRUCTION. IF ANY DISCREPANCIES ARE FOUND, CONTACT THE T-MOBILE ENGINEER.

NOTE:
1. GENERAL CONTRACTOR WILL NOT START CONSTRUCTION UNTIL AFTER THEY HAVE RECEIVED THE PRE-CON PACKAGE AND HAVE A PRE-CON WALK WITH THE PROJECT MANAGER.
2. GENERAL CONTRACTOR TO HIRE PUBLIC (811) AND PRIVATE LOCATING SERVICE IN ORDER TO LOCATE AND PROTECT ALL SURFACE UTILITIES. DO NOT SCALE OFF THESE PLANS FOR ANY BELOW GRADE UTILITIES.
3. CONTRACTOR SHALL VERIFY ALL EXISTING BURIED AND OVERHEAD UTILITIES PRIOR TO EXCAVATION. CONTRACTOR SHALL REPAIR ALL DAMAGED UTILITIES AT HIS OWN COST AND COORDINATE ANY REPAIRS WITH RESPECTIVE UTILITY COMPANY.
4. CONTRACTOR SHALL RESTORE AND REPAIR ANY DAMAGED AREAS CAUSED BY CONSTRUCTION.
5.NO UPDATED SURVEY HAS BEEN PERFORMED PROPERTY IMPROVEMENT DEPICTIONS ARE APPROXIMATE LOCATIONS

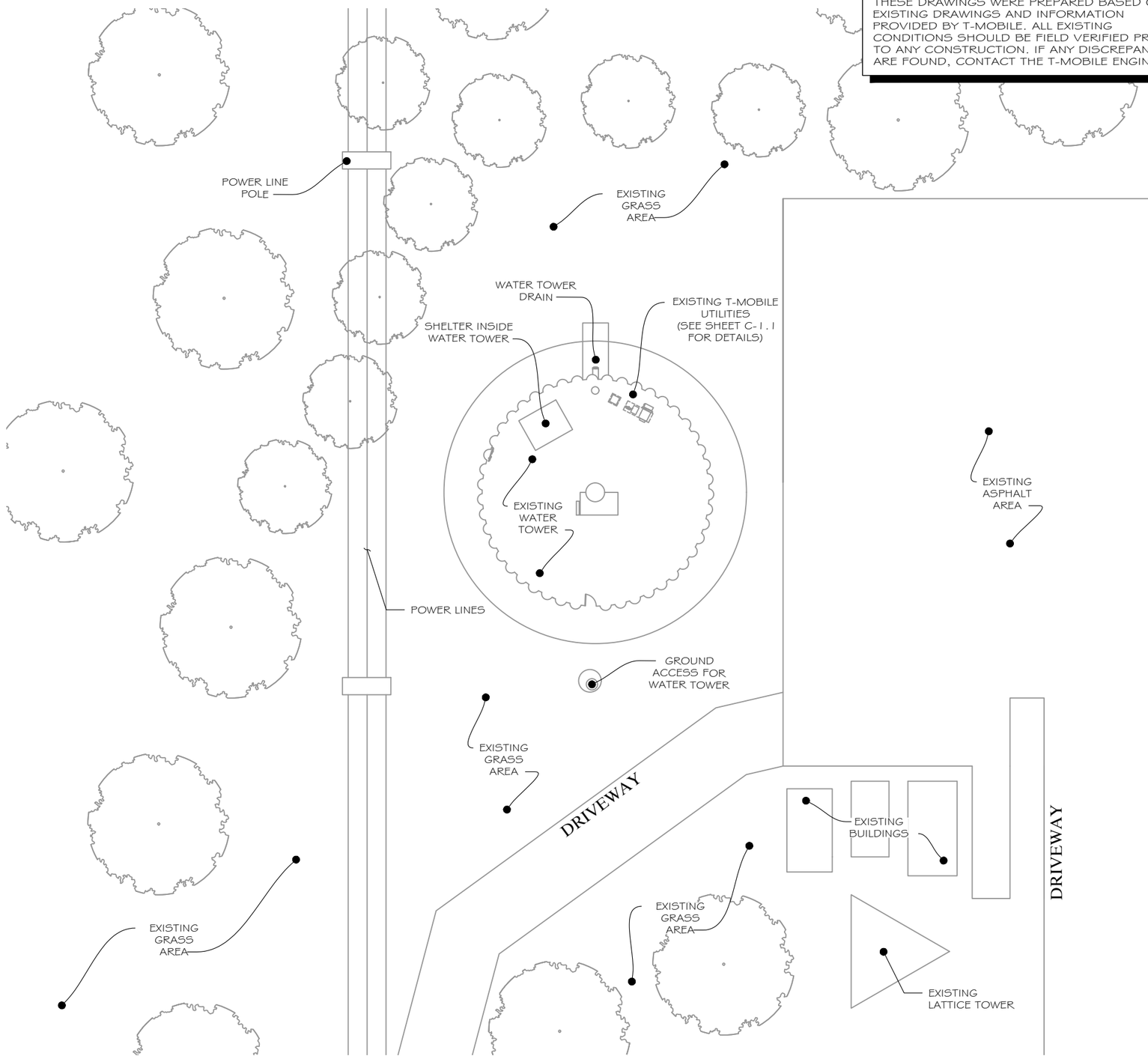

OVERALL SITE PLAN

NORTH

30' 0 15' 30'

SCALE: 1"=30'-0" (22x34)
(OR) 1/2"=30'-0" (11x17)

T-Mobile
8000 WEST 78TH STREET
SUITE 400
EDINA, MN 55439
PH: (952) 833-4145

TRILEAF
1821 WALDEN OFFICE SQUARE
SUITE 500
SCHAUMBURG, IL 60173
PH: (630) 227-0202 F: (630) 227-1212

Insite inc.
Wireless Consulting Services
1S660 MIDWEST ROAD
SUITE 140
OAKBROOK TERRACE, IL 60181

I hereby certify that this plan, specification, or report was prepared by me or under my direct supervision and that I am a duly Licensed Professional Engineer under the laws of the State of Minnesota

Print Name: ROGER ALLAN ZIMMER
Signature: Roger Allan Zimmer
Date 11.11.20 License # 51980

SITE NAME:
WATER TOWER

SITE ID:
A1P0059A

SITE ADDRESS:
123 JONATHON BLVD
CHASKA, MN 55318

PROJECT NUMBER:
649038

NO.	DATE	REV	REVISIONS	BY	APP
3	11/10/20	-	FINAL CD'S REV 0	JG	RZ
2	08/21/20	-	PRELIMINARY CD'S REV B	JP/BS	RZ
1	05/26/20	-	PRELIMINARY CD'S REV A	JP	RZ

ISSUE RECORD
△ REVISION THIS SHEET ● NO REVISION THIS SHEET
THESE DRAWINGS ARE FULL SIZE AND ARE SCALABLE ON 11"X 17" OR 22X34 SHEET SIZE AND ARE NOT REDUCED IN SIZE.

SHEET DESCRIPTION
OVERALL SITE PLAN

SHEET NUMBER
C-1.0

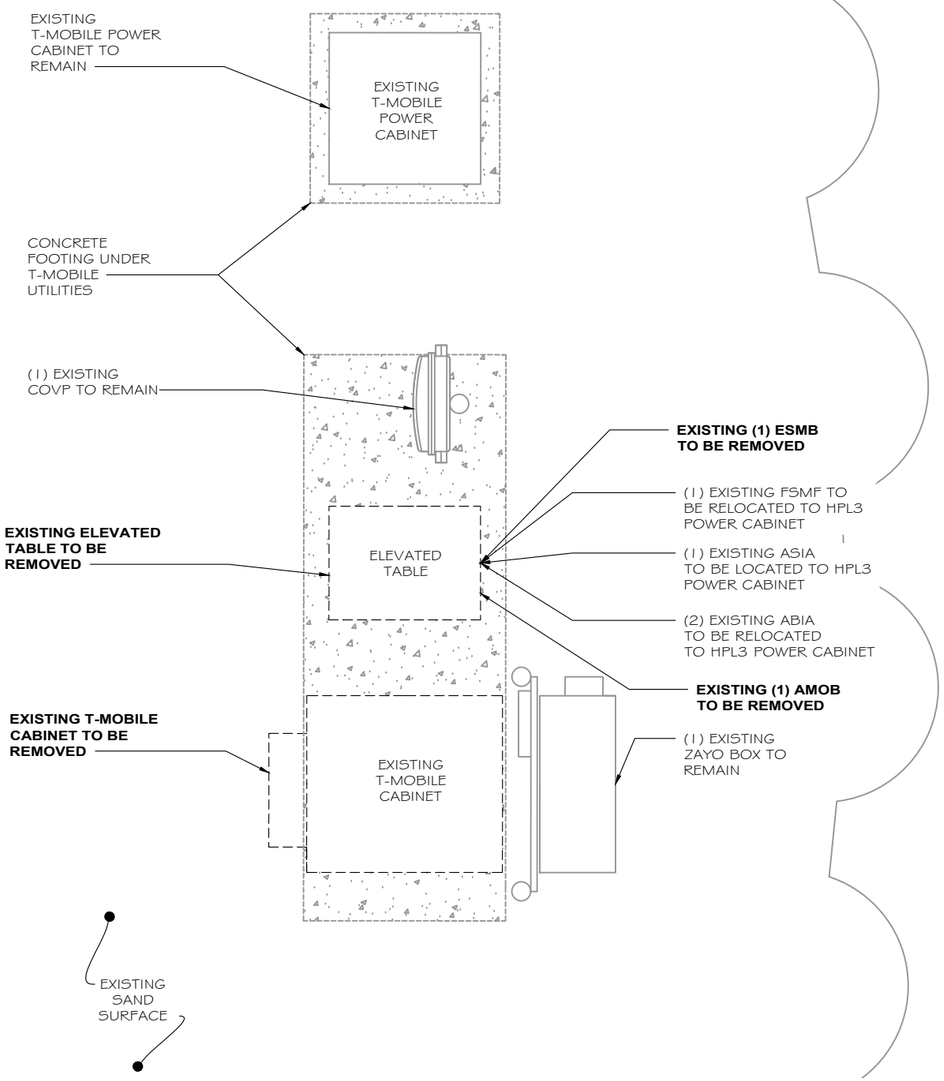

EXISTING EQUIPMENT PLAN

NORTH

0 3" 6" 1'

SCALE: 3/4"=1'-0" (22x34)
(OR) 3/8"=1'-0" (11x17)

CONTRACTOR NOTE:
THIS SITE REQUIRES AN ELECTRICAL SERVICE UPGRADE AS FOLLOWS:

ELECTRICAL SERVICE UPGRADE	
EXISTING CONDITION	**PROPOSED UPGRADE**
FEED FROM POWER COMPANY IS 100 AMP 120/240 V IN 2 INCH CONDUIT	**UPGRADE SERVICE TO 200A**
METER ENCLOSURE IS 200 AMP RATED AND FEED WITH 100 AMP	**UPGRADE SERVICE TO 200A**
THE EXISTING FEED FROM THE METER IS 100 AMP	**UPGRADE FEED FROM METER TO 200A**
THE EXISTING SERVICE DISCONNECT IS 100 AMPS	**UPGRADE SERVICE DISCONNECT TO 200A**
CONDUIT FROM SERVICE TO THE TRANSFER SWITCH CABINET IS 1.25 INCH	**UPSIZE CONDUIT TO 2"**
THE WIRE FROM SERVICE TO THE TRANSFER SWITCH CABINET IS 100 AMPS	**UPGRADE WIRE FROM SERVICE TO TRANSFER SWITCH TO 200A**
THE FEED TO THE BBU IS 1, 100 AMP FEED	**BBU UPGRADED W/ HPL3, NO ACTION REQUIRED**
FIBER RUNS THROUGH THE UIC CABINET	N/A
IN BUILDING FEED?	N/A

ALL UNUSED COMPONENTS, CABLES, HARDWARE, ETC. SHALL BE REMOVED THE TOWER.

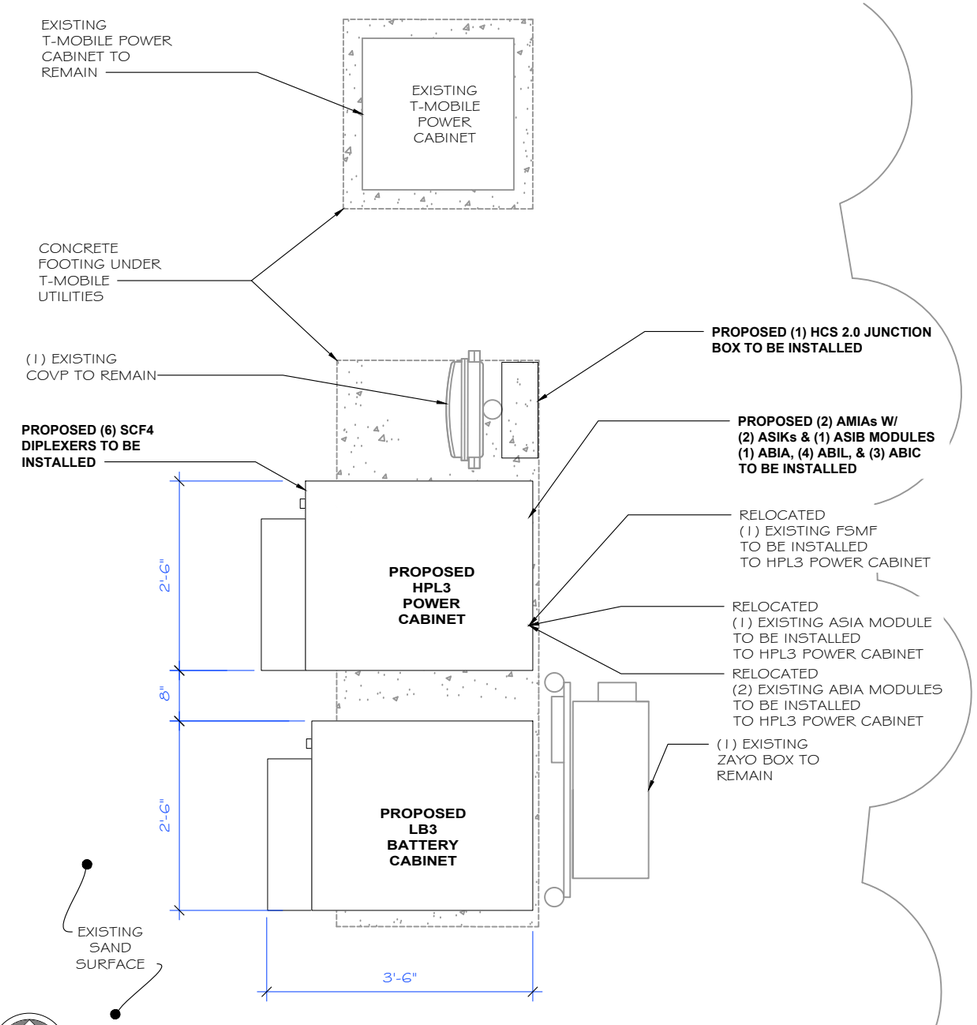

PROPOSED EQUIPMENT PLAN

NORTH

0 6" 1' 2'

SCALE: 1/2"=1'-0" (22x34)
(OR) 1/4"=1'-0" (11x17)

T-Mobile
8000 WEST 78TH STREET
SUITE 400
EDINA, MN 55439
PH: (952) 833-4145

TRILEAF
1821 WALDEN OFFICE SQUARE
SUITE 500
SCHAUMBURG, IL 60173
PH: (630) 227-0202 F: (630) 227-1212

Insite inc.
Wireless Consulting Services
1S660 MIDWEST ROAD
SUITE 140
OAKBROOK TERRACE, IL 60181

I hereby certify that this plan, specification, or report was prepared by me or under my direct supervision and that I am a duly Licensed Professional Engineer under the laws of the State of Minnesota

Print Name: ROGER ALLAN ZIMMER
Signature: Roger Allan Zimmer
Date 11.11.20 License # 51980

SITE NAME:
WATER TOWER

SITE ID:
A1P0059A

SITE ADDRESS:
123 JONATHON BLVD
CHASKA, MN 55318

PROJECT NUMBER:
649038

NO.	DATE	REV	BY	APP
3	11/10/20	-	JG	RZ
2	08/21/20	-	JP/BS	RZ
1	05/26/20	-	JP	RZ

REVISIONS

FINAL CD'S REV 0
PRELIMINARY CD'S REV B
PRELIMINARY CD'S REV A

△ REVISION THIS SHEET
ISSUE RECORD ◆ NO REVISION THIS SHEET
THESE DRAWINGS ARE FULL SIZE AND ARE SCALABLE ON 11"X 17" OR 22X34 SHEET SIZE AND ARE NOT REDUCED IN SIZE.

SHEET DESCRIPTION
EXISTING & PROPOSED EQUIPMENT PLAN

SHEET NUMBER
C-1.1

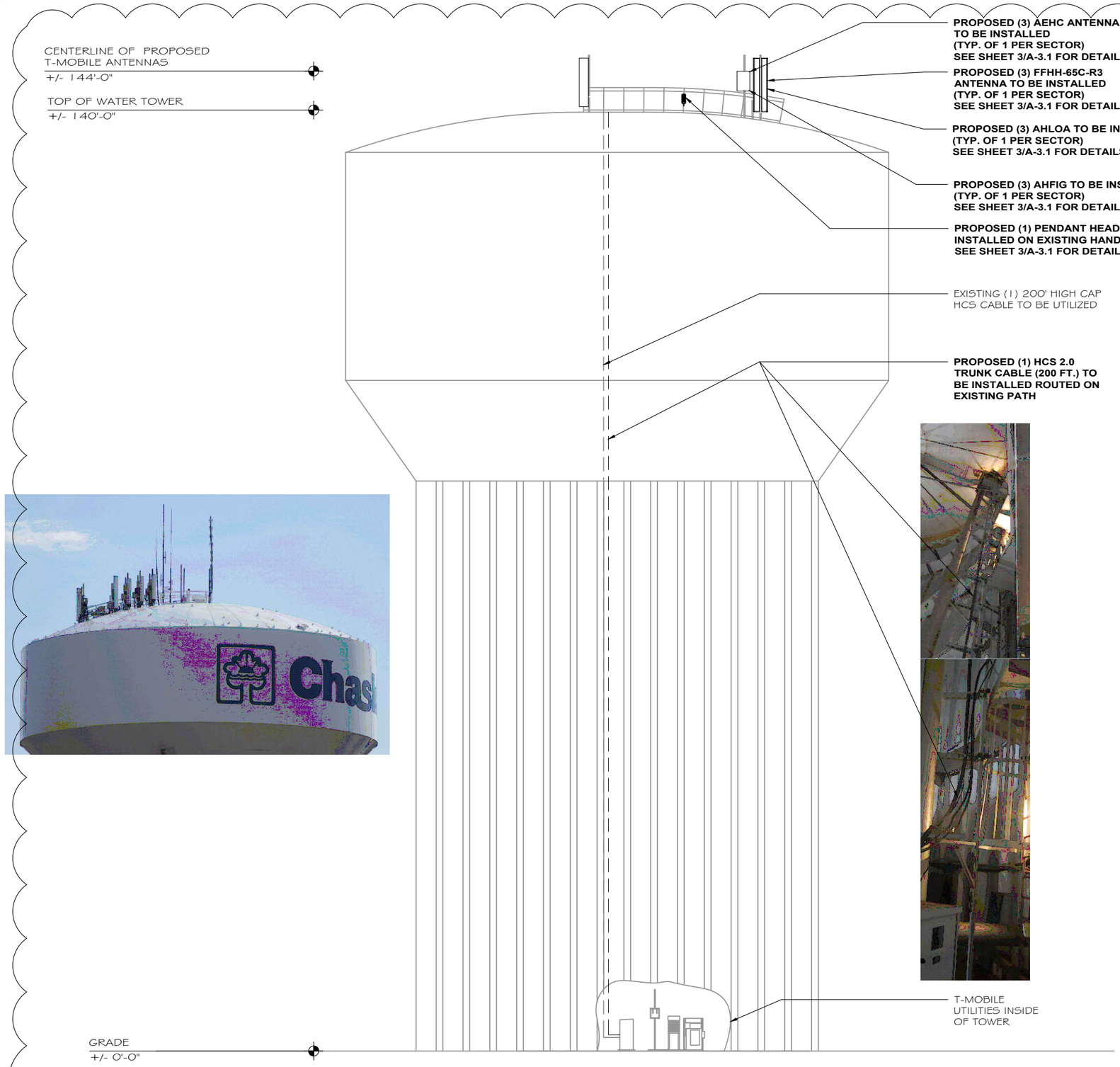

TOWER ELEVATION

A-1.0

NOTE
UNUSED COAXIAL CABLES TO BE REMOVED, THE CABLES WOULD BE DONE IN A NEAT MANNER THAT DOES NOT DAMAGE THE TANK.

NOTE:
CONTRACTOR TO FIELD VERIFY EXISTING COAX MOUNTING BRACKET HARDWARE AND CONNECTION TO ENSURE ALL CONNECTIONS AND HARDWARE ARE IN GOOD CONDITION OR REPLACE AS NEEDED.

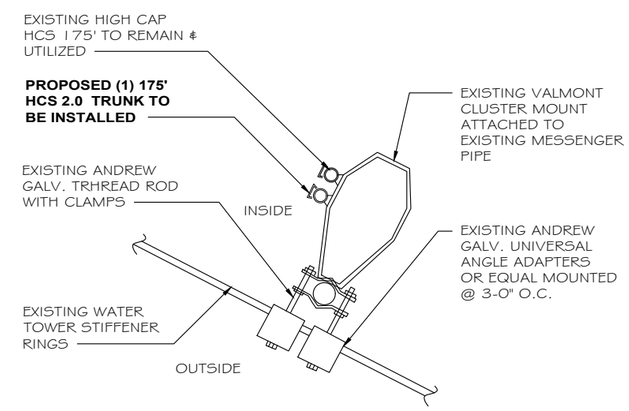

EXISTING / PROPOSED
CABLE ROUTE DETAILS (VERTICAL)

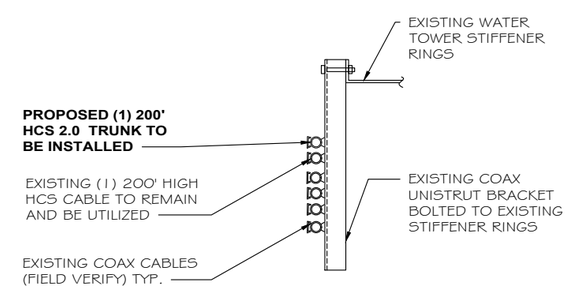

EXISTING / PROPOSED
CABLE ROUTE DETAILS (HORIZONTAL)

2
A-1.0

CABLE SUPPORT DETAILS

0 4' 8' 16'

SCALE:	1/16"=1'-0" (22x34)
(OR)	1/32"=1'-0" (11x17)

SCALE
N.T.S.

T-Mobile
8000 WEST 78TH STREET
SUITE 400
EDINA, MN 55439
PH: (952) 833-4145

TRILEAF
1821 WALDEN OFFICE SQUARE
SUITE 500
SCHAUMBURG, IL 60173
PH: (630) 227-0202 F: (630) 227-1212

Insite inc.
Wireless Consulting Services
1S660 MIDWEST ROAD
SUITE 140
OAKBROOK TERRACE, IL 60181

I hereby certify that this plan, specification, or report was prepared by me or under my direct supervision and that I am a duly Licensed Professional Engineer under the laws of the State of Minnesota

Print Name: ROGER ALLAN ZIMMER
Signature: Roger Allan Zimmer
Date 11.11.20 License # 51980

SITE NAME:
WATER TOWER

SITE ID:
A1P0059A

SITE ADDRESS:
123 JONATHON BLVD
CHASKA, MN 55318

PROJECT NUMBER:
649038

NO.	DATE	REV	REVISIONS	BY	APP
3	11/10/20	-	FINAL CD'S REV 0	JG	RZ
2	08/21/20	-	PRELIMINARY CD'S REV B	JPBS	RZ
1	05/26/20	-	PRELIMINARY CD'S REV A	JP	RZ

ISSUE RECORD
△ REVISION THIS SHEET ◆ NO REVISION THIS SHEET
THESE DRAWINGS ARE FULL SIZE AND ARE SCALABLE ON 11"X 17" OR 22X34 SHEET SIZE AND ARE NOT REDUCED IN SIZE.

SHEET DESCRIPTION
TOWER ELEVATION

SHEET NUMBER
A-1.0

NOTE:
THESE DRAWINGS WERE PREPARED BASED ON EXISTING DRAWINGS AND INFORMATION PROVIDED BY T-MOBILE. ALL EXISTING CONDITIONS SHOULD BE FIELD VERIFIED PRIOR TO ANY CONSTRUCTION. IF ANY DISCREPANCIES ARE FOUND, CONTACT THE T-MOBILE ENGINEER.

NOTE:
INCLUDE NEOPRENE, NYLON WASHERS, AND A METAL SHIM AS NECESSARY BENEATH AND AROUND ALL CLAMPS, ANGLE ADAPTERS, ETC. AT ALL PAINTED CONTACT POINTS. ON ALL PAINTED EXTERIOR U-BOLT OR COMPRESSION MOUNT CONTACT POINTS ALSO USE COLORED TAPE TO MATCH THE TOWER.

NOTE:
ALL/ANY TOWER, GRADE AND/OR EQUIPMENT SHELTER PENETRATION(S) ARE REQUIRED TO BE COMPLETELY SEALED WITH THE APPROPRIATE WEATHERPROOF BOOT.

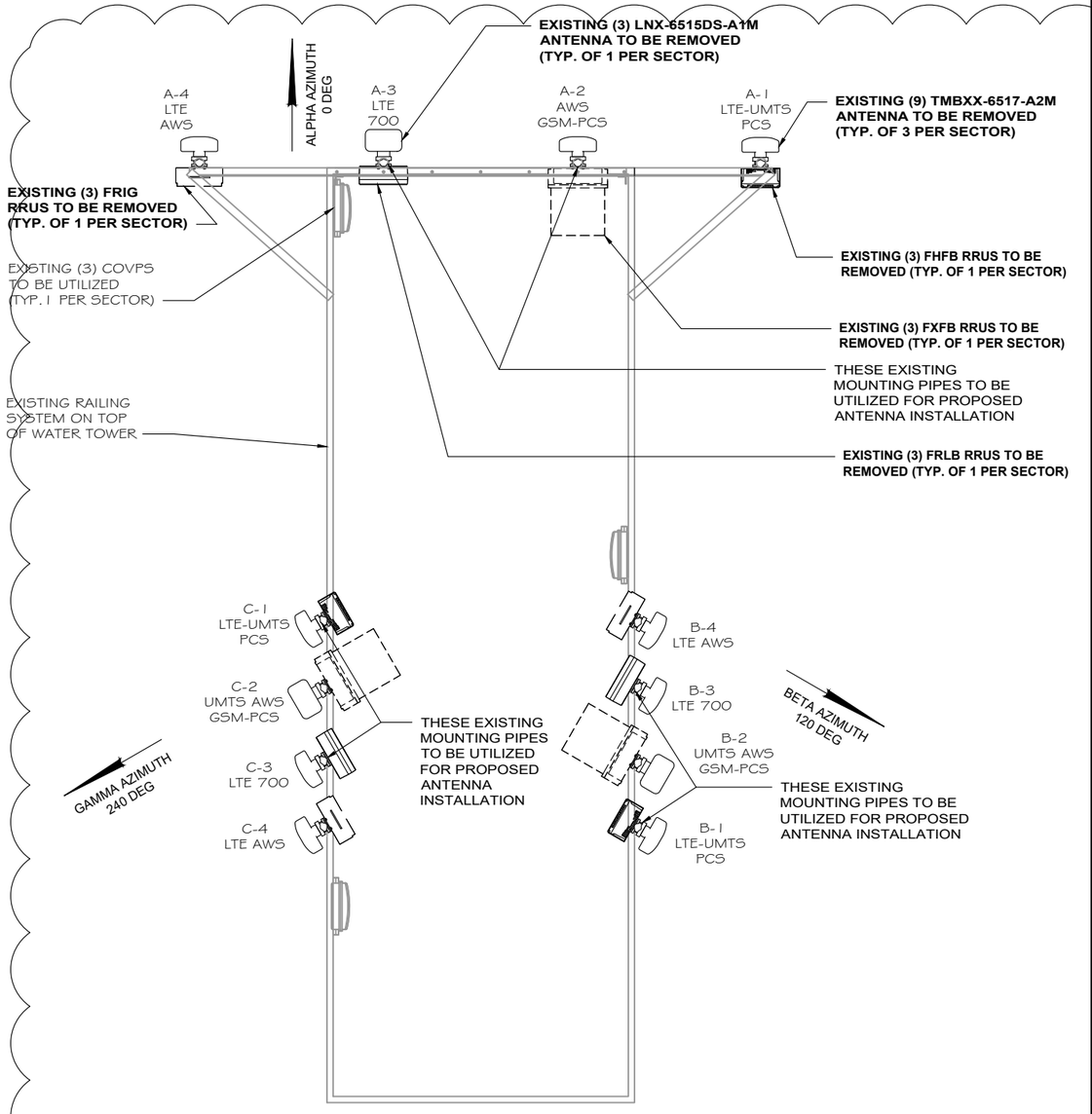

EXISTING ANTENNA LAYOUT

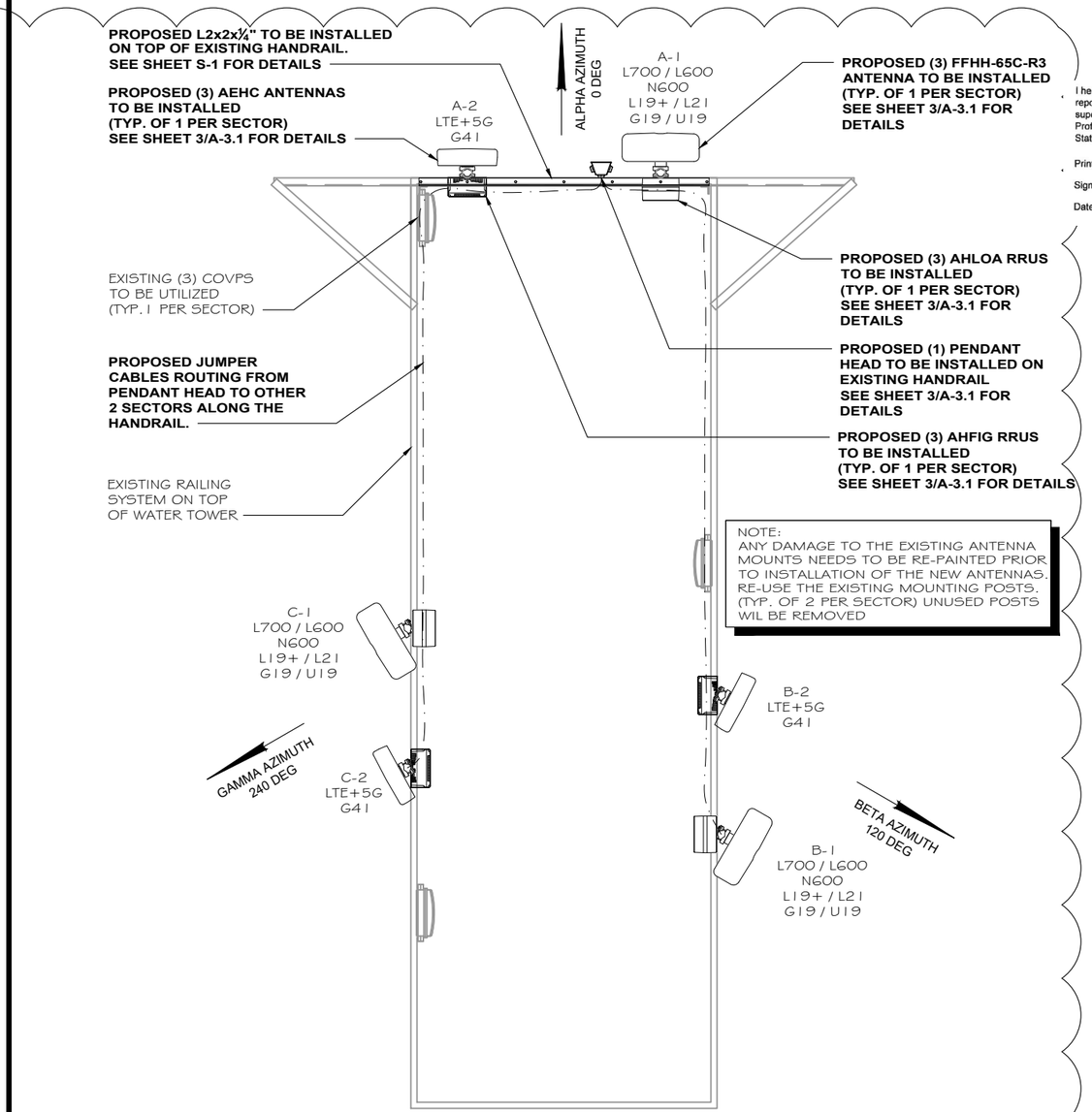

PROPOSED ANTENNA LAYOUT

SCALE N.T.S.

SCALE N.T.S.

T-Mobile
8000 WEST 78TH STREET
SUITE 400
EDINA, MN 55439
PH: (952) 833-4145

TRILEAF
1821 WALDEN OFFICE SQUARE
SUITE 500
SCHAUMBURG, IL 60173
PH: (630) 227-0202 F: (630) 227-1212

Insite inc.
Wireless Consulting Services
1S660 MIDWEST ROAD
SUITE 140
OAKBROOK TERRACE, IL 60181

I hereby certify that this plan, specification, or report was prepared by me or under my direct supervision and that I am a duly Licensed Professional Engineer under the laws of the State of Minnesota

Print Name: ROGER ALLAN ZIMMER
Signature: Roger Allan Zimmer
Date 11.11.20 License # 51980

SITE NAME: WATER TOWER
SITE ID: A1P0059A
SITE ADDRESS: 123 JONATHON BLVD CHASKA, MN 55318
PROJECT NUMBER: 649038

NO.	DATE	REV.	REVISIONS	BY	APP.
3	11/10/20	-	FINAL CD'S REV 0	JG	RZ
2	08/21/20	-	PRELIMINARY CD'S REV B	JP/BS	RZ
1	05/26/20	-	PRELIMINARY CD'S REV A	JP	RZ

ISSUE RECORD
△ REVISION THIS SHEET ● NO REVISION THIS SHEET
THESE DRAWINGS ARE FULL SIZE AND ARE SCALABLE ON 11"X 17" OR 22X34 SHEET SIZE AND ARE NOT REDUCED IN SIZE.

SHEET DESCRIPTION
ANTENNA LAYOUTS

SHEET NUMBER
A-1.1

ANTENNA KEY

STATUS	ANTENNA NUMBER	ANTENNA VENDOR	MODEL #	AZIMUTH	ELECTRICAL DOWNTILT	MECHANICAL DOWNTILT	ANTENNA CENTERLINE AGL	TYPE	COAXIAL FEEDER SIZE	COAXIAL FEEDER LENGTH	HYBRID CABLE FEEDER SIZE	HYBRID CABLE FEEDER LENGTH
PROPOSED	**A-1**	**COMMSCOPE**	**FFHH-65C-R3**	**0°**	**2 / 2 / 2 / 2**	**0**	**144'-0"**	**L700 / L600 / N600 U1900 / L2100 L1900 / G1900**	EXISTING		EXISTING 200' HIGH CAP HCS **PROPOSED 200' HCS 2.0 TRUNK**	
PROPOSED	**A-2**	**NOKIA**	**AEHC**	**0°**	**2**	**0**	**144'-0"**	**L2500 / N2500**				
PROPOSED	**B-1**	**COMMSCOPE**	**FFHH-65C-R3**	**120°**	**2 / 2 / 2 / 2**	**0**	**144'-0"**	**L700 / L600 / N600 U1900 / L2100 L1900 / G1900**	EXISTING		EXISTING 200' HIGH CAP HCS **PROPOSED 200' HCS 2.0 TRUNK**	
PROPOSED	**B-2**	**NOKIA**	**AEHC**	**120°**	**2**	**0**	**144'-0"**	**L2500 / N2500**				
PROPOSED	**C-1**	**COMMSCOPE**	**FFHH-65C-R3**	**240°**	**2 / 2 / 2 / 2**	**0**	**144'-0"**	**L700 / L600 / N600 U1900 / L2100 L1900 / G1900**	EXISTING		EXISTING 200' HIGH CAP HCS **PROPOSED 200' HCS 2.0 TRUNK**	
PROPOSED	**C-2**	**NOKIA**	**AEHC**	**240°**	**2**	**0**	**144'-0"**	**L2500 / N2500**				

EQUIPMENT KEY - CONCRETE PAD

LOCATION	VENDOR	EQUIPMENT	MODEL NO.	QTY.	STATUS
EQUIPMENT LEVEL	NOKIA	SYSTEM MODULE	FSMF	1	EXISTING
EQUIPMENT LEVEL	RAYCAP	FIBER JUNCTION BOX	COVP	1	EXISTING
EQUIPMENT LEVEL	NOKIA	SYSTEM MODULE	ASIA	1	EXISTING
EQUIPMENT LEVEL	**NOKIA**	**SYSTEM SUBRACK**	**AMIA**	**2**	**PROPOSED**
EQUIPMENT LEVEL	**NOKIA**	**SYSTEM SUBMODULE**	**ABIA**	**3**	(2) EXISTING **(1) PROPOSED**
EQUIPMENT LEVEL	**NOKIA**	**SYSTEM SUBMODULE**	**ABIL**	**4**	**PROPOSED**
EQUIPMENT LEVEL	**NOKIA**	**SYSTEM SUBMODULE**	**ABIC**	**3**	**PROPOSED**
EQUIPMENT LEVEL	**NOKIA**	**SYSTEM MODULE**	**ASIK**	**2**	**PROPOSED**
EQUIPMENT LEVEL	**NOKIA**	**SYSTEM MODULE**	**ASIB**	**1**	**PROPOSED**
EQUIPMENT LEVEL	**NOKIA**	**DIPLEXERS**	**SFC4**	**6**	**PROPOSED**

EQUIPMENT KEY -SECTOR

LOCATION	VENDOR	EQUIPMENT	MODEL NO.	QTY.	STATUS
ANTENNA LEVEL	RAYCAP	FIBER JUNCTION BOX	COVP	3	EXISTING
ANTENNA LEVEL	**NOKIA**	**RRU**	**AHFIG**	**3**	**PROPOSED**
ANTENNA LEVEL	**NOKIA**	**RRU**	**AHLOA**	**3**	**PROPOSED**
ANTENNA LEVEL	**NOKIA**	**PENDANT HEAD**	**HCS 2.0**	**1**	**PROPOSED**

1 A-2.0 ANTENNA KEY

SCALE N.T.S.

CHARACTERISTICS	ALLIANCE	COMMSCOPE	NWS
DIMENSIONS [IN]	9.3x14.9x5.8	6.7x16.9x4.7	10.2x16.0x3.2
WEIGHT	1.61 LB/FT	0.970 LB/FT	1.61 LB/FT
PORT INTERFACE	SENKO U	SENKO U	SENKO U
HYBRID PORTS	12	12	12
CONDUCTOR TERMINATION	NONE	NONE	NONE
SINGLE MODE FIBERS	48	48	48
FIBER TERMINATION	LC PAIR	LC PAIR	LC PAIR
MAX RRU	12	12	12

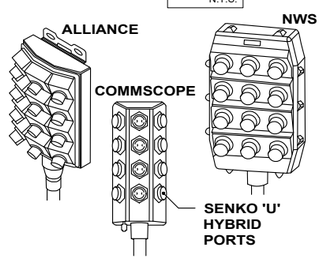

5 A-2.0 BREAKOUT FEATURE SPECS

SCALE N.T.S.

- **BOTTOM JUNCTION BOX AND ROOF TOP BOX REQUIRES 3 DC-BREAKERED FEEDS EACH**
- **ALLOWS EACH SECTOR TO BE DE-ENERGIZED INDIVIDUALLY FOR MAINTENANCE WITHOUT SERVICE IMPACT TO THE OTHER SECTORS**

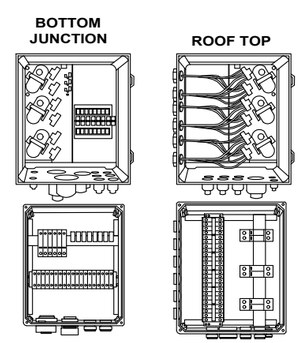

4 A-2.0 DC POWER FEEDS FROM RECTIFIER DISTRIBUTION

SCALE N.T.S.

NOTE:
CABLES SHALL BE MANUFACTURED OR TERMINATED TO THE APPROPRIATE LENGTH AND INSTALLED AS NEAT/DISCREETLY AS POSSIBLE.

NOTE:
EACH COMPONENT, CABLE, OR GROUP OF CABLES (IF ROUTED TOGETHER), SHOULD INCLUDE A TAG CLEARLY IDENTIFYING IT AS THE CARRIER'S EQUIPMENT. CABLES SHALL BE MARKED AT THE BASE OF THE TOWER, AT THE TOP STIFFENER OR ROOF (WHERE THEY TRANSITION FROM VERTICAL TO HORIZONTAL) AND AT THE ANTENNA LOCATION.

COAX COLOR CODING

- **ANTENNAS WILL BE LABELED (BACK OF ANTENNA VIEW) RIGHT TO LEFT 1- X PORTS**
- **COAX/JUMPER LINES WILL BE IDENTIFIED BY SECTOR COLOR AND BY NUMBER OF BANDS AROUND THE COAX / JUMPER**

SECTOR A	RED
SECTOR B	GREEN
SECTOR C	BLUE
SECTOR D	
SECTOR E	WHITE
SECTOR F	PURPLE
LMU	BROWN + SECTOR COLOR BANDS (1,2)
FIBER ID	GRAY
UNUSED COAX	PINK
MICROWAVE	ORANGE
PWE T-1'S +GPS DOWNLINK CABLE	ID w/ LABEL MARKER

FRONT OF THE ANTENNA

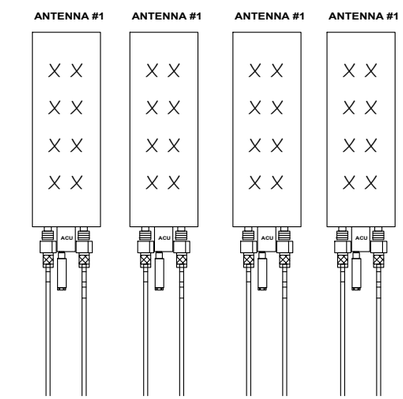

- **EXAMPLE - COAX WITH FOUR BANDS OF RED TAPE WILL REPRESENT *ALPHA SECTOR* AND *THE 4TH PORT OF ANTENNA***

COLOR CODING NOTES:

COLOR	GSM
COLOR	UMTS 1900
COLOR	UMTS AWS
COLOR	LTE
COLOR	FIBER CABLE

METALLIC TAG NOTES:

1. TWO METALLIC TAGS SHALL BE ATTACHED AT EACH END OF EVERY CABLE LONGER THAN (3) FEET
2. CABLE LESS THAN (3) THREE FEET WILL HAVE TWO METALLIC TAGS ATTACHED AT THE CENTER OF THE CABLE
3. TAGS WILL BE FASTENED WITH STAINLESS STEEL ZIP TIES APPROPRIATE FOR CABLE DIAMETER
4. STANDARDIZED METALLIC TAG KIT WILL BE ASSEMBLED WITH TAGS ALREADY ENGRAVED TO ACCOMMODATE ALL CONFIGURATIONS

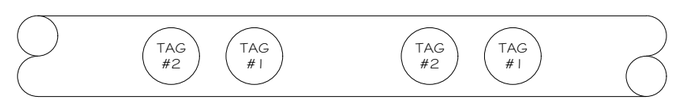

2 A-2.0 COAX/TAGGING COLOR CODING

SCALE N.T.S.

CHARACTERISTICS	ALLIANCE	COMMSCOPE	NWS
OUTER DIAMETER	1.46"	1.55"	1.48"
WEIGHT	1.61 LB/FT	1.71 LB/FT	1.61 LB/FT
MIN. BEND RAD	14.6"	18.6"	21.5"
DC CONDUCTORS	12 x 6 AWG	12 x 6 AWG	12 x 6 AWG
ARMOR	CORRUGATED CU	CORRUGATED AL	CU TAPE, PVC
CONDUCTOR TERMINATION	NONE	NONE	NONE
SINGLE-MODE FIBERS	48	48	48
FIBER TERMINATION	LC PAIR	LC PAIR	LC PAIR

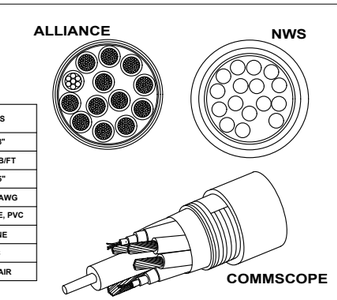

3 A-2.0 TRUNK CABLE SPECS

SCALE N.T.S.

T-Mobile
8000 WEST 78TH STREET
SUITE 400
EDINA, MN 55439
PH: (952) 833-4145

TRILEAF
1821 WALDEN OFFICE SQUARE
SUITE 500
SCHAUMBURG, IL 60173
PH: (630) 227-0202 F: (630) 227-1212

Insite inc.
Wireless Consulting Services
1S660 MIDWEST ROAD
SUITE 140
OAKBROOK TERRACE, IL 60181

I hereby certify that this plan, specification, or report was prepared by me or under my direct supervision and that I am a duly Licensed Professional Engineer under the laws of the State of Minnesota

Print Name: ROGER ALLAN ZIMMER
Signature: Roger Allan Zimmer
Date 11.11.20 License # 51980

SITE NAME: WATER TOWER
SITE ID: A1P0059A
SITE ADDRESS: 123 JONATHON BLVD CHASKA, MN 55318
PROJECT NUMBER: 649038

NO.	DATE	REV	REVISIONS	BY	APP
3	11/10/20	-	FINAL CD'S REV 0	JG	RZ
2	08/21/20	-	PRELIMINARY CD'S REV B	JP/BS	RZ
1	05/26/20	-	PRELIMINARY CD'S REV A	JP	RZ

△ REVISION THIS SHEET
ISSUE RECORD
NO REVISION THIS SHEET
THESE DRAWINGS ARE FULL SIZE AND ARE SCALABLE ON 11"X 17" OR 22X34 SHEET SIZE AND ARE NOT REDUCED IN SIZE.

SHEET DESCRIPTION: ANTENNA & EQUIPMENT CONFIGURATION KEYS

SHEET NUMBER: A-2.0

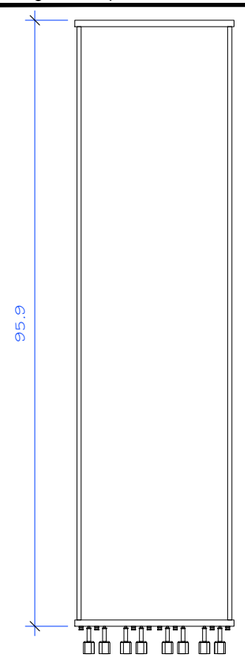

NOTE:
SEE APPROVED STRUCTURAL ANALYSIS FOR ANTENNA & RRU MOUNTING DETAILS

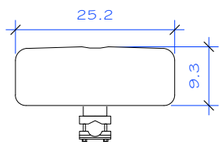

MANUFACTURER:	COMMSCOPE
MODEL:	FFHH-65C-R3
WEIGHT:	127.6 LBS.
DIMENSIONS:	95.9" x 25.2" x 9.3"
FREQUENCY:	REFER TO RF DATA SHEET

1 A-3.0 FFHH-65C-R3 ANTENNA DETAIL

SCALE N.T.S.

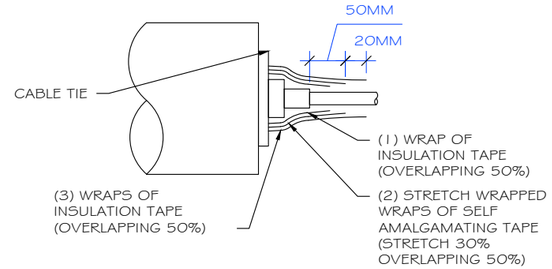

2 A-3.0 RF JUMPER CONNECTION DETAIL

SCALE N.T.S.

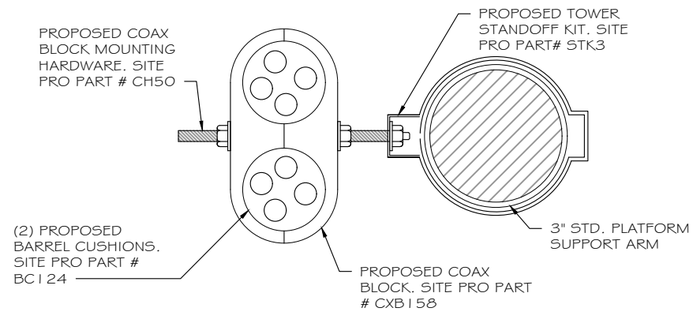

3 A-3.0 RF JUMPER MOUNTING DETAIL

SCALE N.T.S.

BAND	B25 + B66
INSTANTANEOUS BW (DL/UL)	65MHz ON BAND 25, 80MHz ON BAND 66
SUPPORTED MODULATION SCHEMES	UP TO 64QAM (UL) AND UP TO 256QAM (DL)
SUPPORTED BANDWIDTHS	LTE 1.4,3,5,10,15,20 MHz
NO. OF PORTS	4T4R
OUTPUT POWER	80 W FOR BAND 25 AND 40 W FOR BAND 66 (TOTAL POWER IS 480W)
FIBER PORTS	2 x 9.8Gbps CPRI
RF CONNECTOR	4.3 - 10+
AISG	AISG ON ALL PORTS, DC ON ANT1 AND ANT3
DIMENSIONS (H x W x D) IN	27.4 x 12.1 x 5.2
WEIGHT LBS	79.3 WITHOUT COVER
HW / SW AVAILABILITY	SEPT '19 - SRAN19A
5G NR SUPPORT	YES

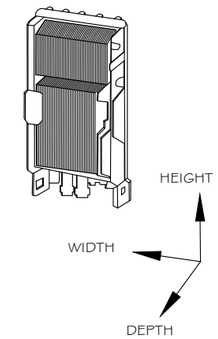

4 A-3.0 AHFIG DETAIL

SCALE N.T.S.

SPECIFICATION	3GPP / FCC COMPLIANT, TDD
FREQUENCY RANGE	2496 - 2690 MHz
MAX. SUPPORTED MODULATION	256 QAM
NUMBER OF TX/RX PATHS	64T / 64R
MIMO STREAMS	16
INSTANTANEOUS BANDWIDTH IBW	194 MHz
OCCUPIED BANDWIDTH OBW	194 MHz
TOTAL AVERAGE EIRP	79.3 dBm
MAX. OUTPUT POWER PER TRX	3.75 W / TRX (240 W TOTAL)
ANTENNA CONFIGURATION	12 ROWS, 8 COLUMNS, 2 (±45° X-POLARIZED)
MAX. ANTENNA GAIN	25.5 dBi
HORIZONTAL BEAMWIDTH	15° (BORESIGHT)
VERTICAL BEAMWIDTH	6° (BORESIGHT)
HORIZONTAL COVERAGE ANGLE	±45° (3 dB), ±60° (5 dB)
VERTICAL STEERING ANGLE	±6°
DIMENSIONS	TBD: 35.4 IN (H) x 22.8 IN (W) x 8.3 IN (D)
VOLUME / WINDWARD AREA	TBD: <110 L / <0.6 m^2
WEIGHT	<95 LB (WITHOUT MOUNTING BRACKETS)
SUPPLY VOLTAGE / CONNECTOR TYPE	DC - 40.5 V... - 57 V / 2 POLE CONNECTOR
POWER CONSUMPTION	900 W TYPICAL (75% DL DUTY CYCLE, 30% RF LOAD) 1300 W MAX (75% DL DUTY CYCLE, 100% RF LOAD)

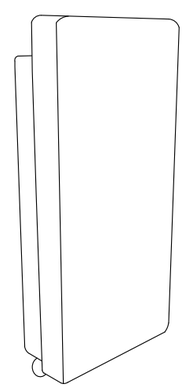

OPTICAL PORTS	4 x SFP28, 10/25GE eCPRI (WITH R2CT)
OTHER INTERFACES / CONNECTOR TYPE	CONTROL AISG - RF MONITOR PORT / SMA FEMALE EXTERNAL ALARMS / MDR26 STATUS LED
OPERATIONAL TEMPERATURE RANGE	-40°C ... +55°C
COOLING	NATURAL CONVECTION COOLING
INGRESS PROTECTION CLASS	IP65
INSTALLATION OPTIONS	POLE / WALL, ± 5° VERTICAL ADJUSTMENT
SURGE PROTECTION	CLASS II 20 kA

6 A-3.0 AEHC DETAIL

SCALE N.T.S.

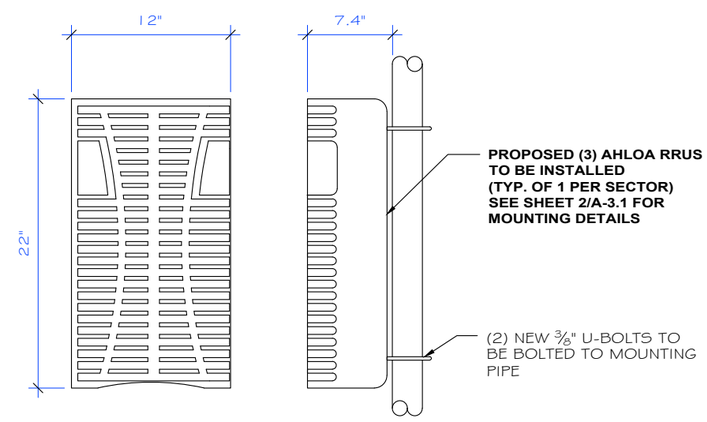

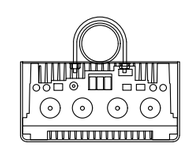

MODEL #	AHLOA RRH
DIMENSIONS (W/OUT BRACKETS OR SOLAR SHIELD)	22" x 12" x 7.4"
NET WEIGHT (W/OUT BRACKETS OR SOLAR SHIELD)	83.6lbs

5 A-3.0 AHLOA RRU DETAIL

SCALE N.T.S.

T-Mobile
8000 WEST 78TH STREET
SUITE 400
EDINA, MN 55439
PH: (952) 833-4145

TRILEAF
1821 WALDEN OFFICE SQUARE
SUITE 500
SCHAUMBURG, IL 60173
PH: (630) 227-0202 F: (630) 227-1212

Insite inc.
Wireless Consulting Services
1S660 MIDWEST ROAD
SUITE 140
OAKBROOK TERRACE, IL 60181

I hereby certify that this plan, specification, or report was prepared by me or under my direct supervision and that I am a duly Licensed Professional Engineer under the laws of the State of Minnesota

Print Name: ROGER ALLAN ZIMMER
Signature: Roger Allan Zimmer
Date 11.11.20 License # 51980

SITE NAME:
WATER TOWER

SITE ID:
A1P0059A

SITE ADDRESS:
123 JONATHON BLVD
CHASKA, MN 55318

PROJECT NUMBER:
649038

NO.	DATE	REV	REVISIONS	BY	APP
3	11/10/20	-	FINAL CD'S REV 0	JG	RZ
2	08/21/20	-	PRELIMINARY CD'S REV B	JP/BS	RZ
1	05/26/20	-	PRELIMINARY CD'S REV A	JP	RZ

ISSUE RECORD
△ REVISION THIS SHEET ◯ NO REVISION THIS SHEET
THESE DRAWINGS ARE FULL SIZE AND ARE SCALABLE ON 11"X 17" OR 22X34 SHEET SIZE AND ARE NOT REDUCED IN SIZE.

SHEET DESCRIPTION
EQUIPMENT DETAILS

SHEET NUMBER
A-3.0

MODEL	LB3 (LARGE BATTERY 3 CABINET)
CONSTRUCTION	ALUMINUM ENCLOSURE
DIMENSIONS (W x H x D)	30 x 72 x 35 in, DEPTH WITH DOOR: 41.2 in
WEIGHT	~540 lbs (WITHOUT BATTERIES)
INTERNAL RACK DIMENSION	4 BATTERY TRAYS TO SUPPORT UP TO 4 STRINGS 210Ah BATTERIES
MOUNTING OPTIONS	PAD-MOUNT, PLINTH OPTION
FINISH	POLYESTER POWDER PAINT (TAN)
SAFETY	UL LISTED, IEC / EN 60950

2 A-3.1 LB3 BATTERY CABINET DETAIL

SCALE N.T.S.

MODEL	HP - LARGE 3 POWER CABINET
CONSTRUCTION	ALUMINUM ENCLOSURE
DIMENSIONS (W x H x D)	30 x 72 x 36 in, DEPTH WITH DOOR: 43 in
WEIGHT	~551 lbs (WITHOUT CUSTOMER EQUIPMENT OR BATTERIES)
INTERNAL RACK DIMENSION	TOTAL EQUIPMENT SPACE, 30R:
	HORIZONTAL RACK: 19" x 27RU
	VERTICAL RACK: 19" x 3RU
	POWER SYSTEM SPACE: 23" X 12RU
MOUNTING OPTIONS	PAD-MOUNT, PLINTH OPTION
FINISH	POLYESTER POWDER PAINT (TAN)
SAFETY	UL LISTED, IEC / EN 60950

1 A-3.1 HPL3 POWER CABINET DETAIL

SCALE N.T.S.

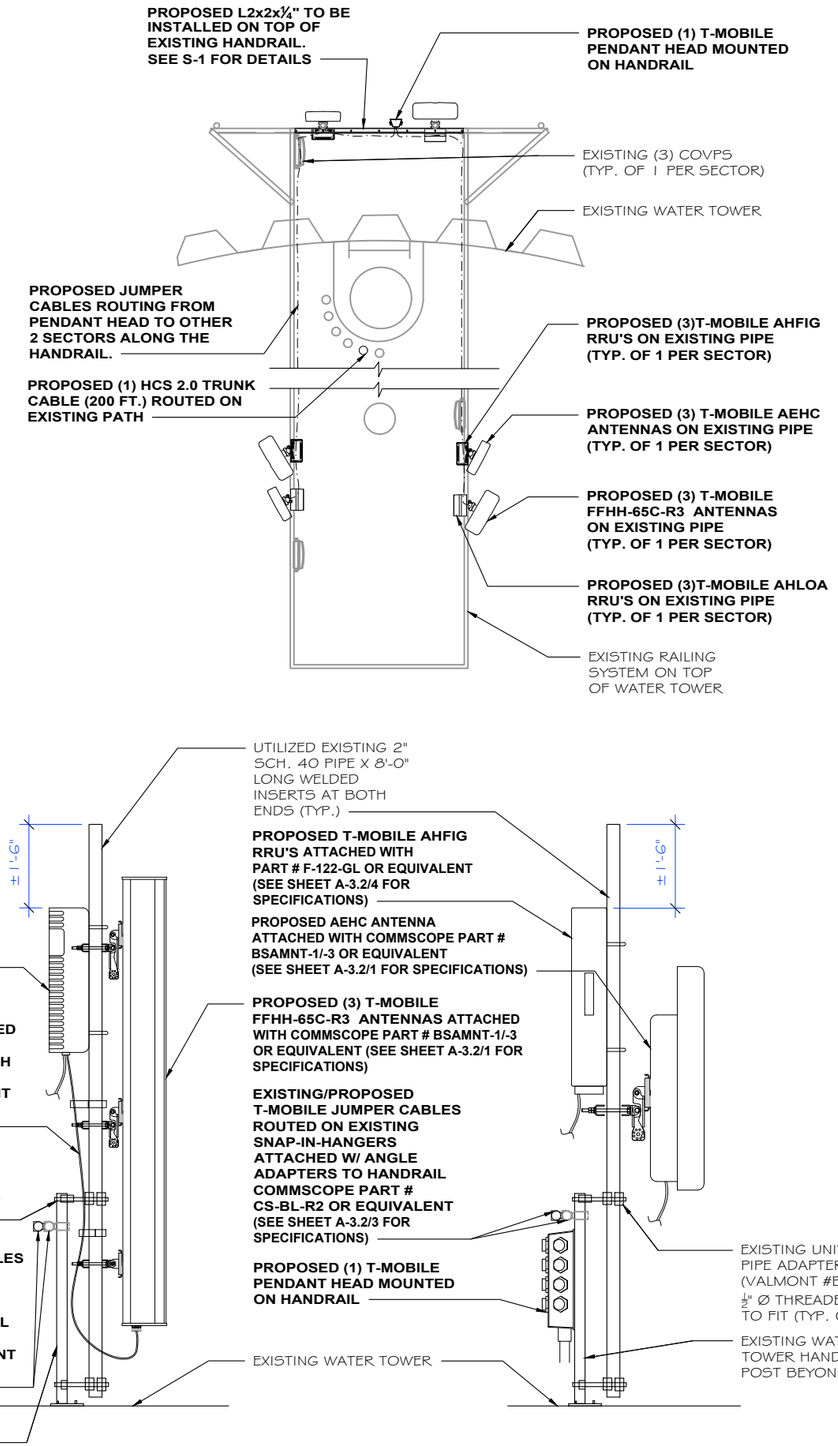

3 A-3.1 EQUIPMENT MOUNTING DETAILS

SCALE N.T.S.

T-Mobile
8000 WEST 78TH STREET
SUITE 400
EDINA, MN 55439
PH: (952) 833-4145

TRILEAF
1821 WALDEN OFFICE SQUARE
SUITE 500
SCHAUMBURG, IL 60173
PH: (630) 227-0202 F: (630) 227-1212

Insite inc.
Wireless Consulting Services
1S660 MIDWEST ROAD
SUITE 140
OAKBROOK TERRACE, IL 60181

I hereby certify that this plan, specification, or report was prepared by me or under my direct supervision and that I am a duly Licensed Professional Engineer under the laws of the State of Minnesota

Print Name: ROGER ALLAN ZIMMER
Signature: Roger Allan Zimmer
Date 11.11.20 License # 51980

SITE NAME: WATER TOWER
SITE ID: A1P0059A
SITE ADDRESS: 123 JONATHON BLVD CHASKA, MN 55318
PROJECT NUMBER: 649038

NO.	DATE	REV	REVISIONS	BY	APP
3	11/10/20	-	FINAL CD'S REV 0	JG	RZ
2	08/21/20	-	PRELIMINARY CD'S REV B	JP/BS	RZ
1	05/26/20	-	PRELIMINARY CD'S REV A	JP	RZ

ISSUE RECORD
△ REVISION THIS SHEET ● NO REVISION THIS SHEET
THESE DRAWINGS ARE FULL SIZE AND ARE SCALABLE ON 11"X 17" OR 22X34 SHEET SIZE AND ARE NOT REDUCED IN SIZE.

SHEET DESCRIPTION: EQUIPMENT DETAILS
SHEET NUMBER: A-3.1

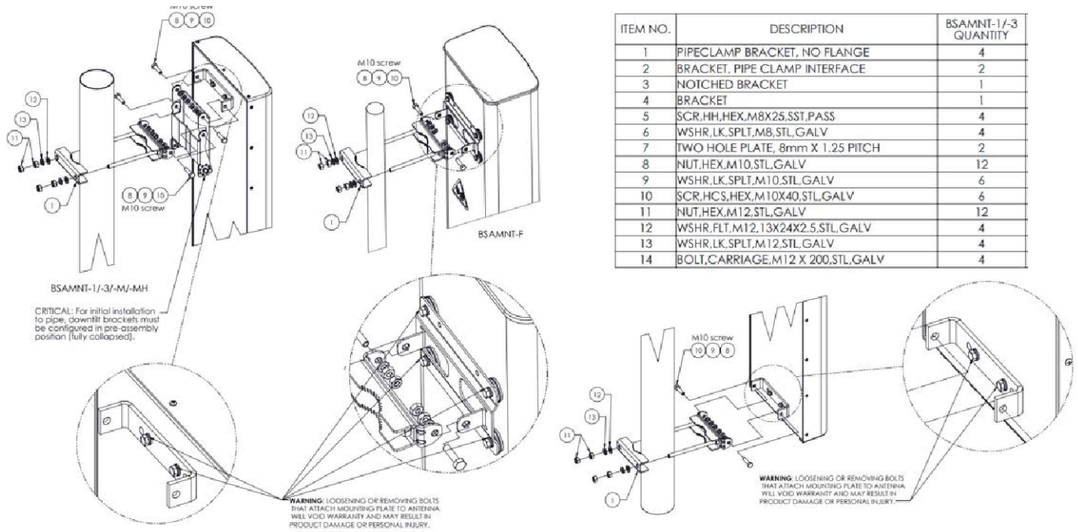

ITEM NO.	DESCRIPTION	BSAMNT-1/-3 QUANTITY
1	PIPECLAMP BRACKET, NO FLANGE	4
2	BRACKET, PIPE CLAMP INTERFACE	2
3	NOTCHED BRACKET	1
4	BRACKET	1
5	SCR,HH,HEX,M8X25,SST,PASS	4
6	WSHR,LK,SPLT,M8,STL,GALV	4
7	TWO HOLE PLATE, 8mm X 1.25 PITCH	2
8	NUT,HEX,M10,STL,GALV	12
9	WSHR,LK,SPLT,M10,STL,GALV	6
10	SCR,HCS,HEX,M10X40,STL,GALV	6
11	NUT,HEX,M12,STL,GALV	12
12	WSHR,FLT,M12,13X24X2.5,STL,GALV	4
13	WSHR,LK,SPLT,M12,STL,GALV	4
14	BOLT,CARRIAGE,M12 X 200,STL,GALV	4

1 A-3.2 COMMSCOPE BSAMNT-1/-3 MOUNTING KIT DETAIL

SCALE N.T.S.

ITEM	PART NO.	DESCRIPTION	QTY.	WEIGHT	NOTE NO.
1	3803FTB	3/8 X 3 FULL THREAD BOLT GALV	2	0.11 LBS	
2	PGRM06	BRACKET, PIM GUARD RM CABLE SUPPORT	2	0.67 LBS	
3	GB-03145	3/8" X 1-1/2" GALV BOLT KIT	2	0.07 LBS	

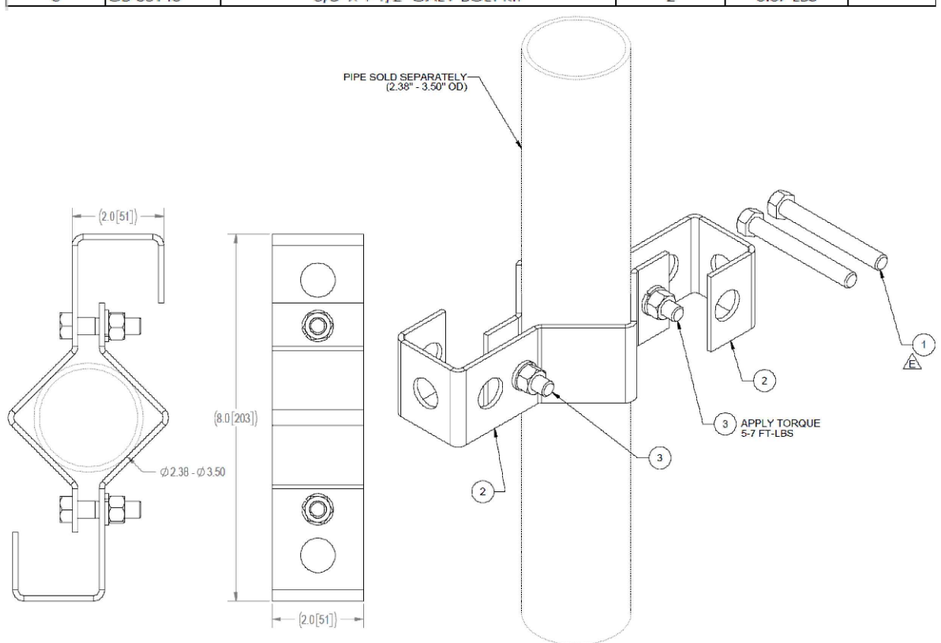

2 A-3.2 COMMSCOPE PG-RMO6 MOUNTING KIT DETAIL

SCALE N.T.S.

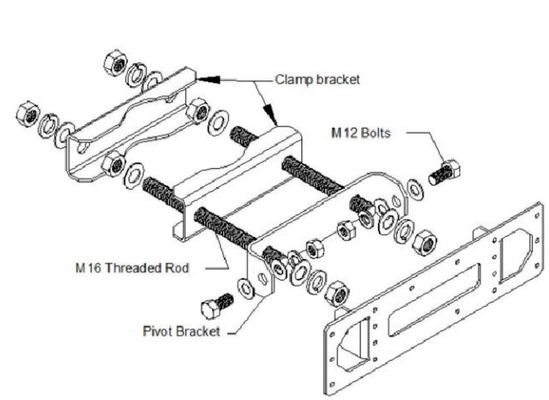

4 A-3.2 COMMSCOPE F-122-GL MOUNTING KIT DETAIL

SCALE N.T.S.

ITEM	PART NO.	DESCRIPTION	CS-B QTY.	CS-B-2 QTY.	CS-B-A QTY.	CS-B-R2 QTY.	CS-B-R6 QTY.	WEIGHT
1	CS-B	CLUSTER SUPPORT BRACKET, LARGE	1	1	1	1	1	3.68 LBS
2	GUB-3244	3/8" X 2-1/2" X 4" GALV U-BOLT	-	1	-	-	-	0.31 LBS
3	MT515	ANGLE ADAPTOR	-	-	1	-	-	1.87 LBS
4	SWL-03	3/8" SS LOCK WASHER	-	-	1	-	-	0.09 LBS
5	SB-0306	3/8" X 3/4" SS BOLT KIT	-	-	1	-	-	0.04 LBS
6	SSTB2550H	HARDWARE KIT (ITEMS 8-13)	-	-	-	1	-	
7	CSBLR6H	HARDWARE KIT (ITEMS 8-11, 14-15)	-	-	-	-	1	
8	GB-04105	1/2" X 1" GALV BOLT KIT	-	-	-	1	1	0.11 LBS
9	GWF-03	3/8" GALV FLAT WASHER	-	-	-	6	6	0.02 LBS
10	GWL-03	3/8" GALV LOCK WASHER	-	-	-	4	4	0.09 LBS
11	GN-03	3/8" GALV HEX NUT	-	-	-	6	6	0.33 LBS
12	SS2550.01	STAR SUPPORT CLAMP	-	-	-	2	-	1.89 LBS
13	GD03950	3/8" X 9-1/2" GALV THREADED ROD	-	-	-	2	-	0.30 LBS
14	SS6080.01	STAR SUPPORT TEE BRACKET	-	-	-	-	2	2.51 LBS
15	TLSA6080.03	3/8" X 14" GALV THREADED ROD	-	-	-	-	2	0.44 LBS

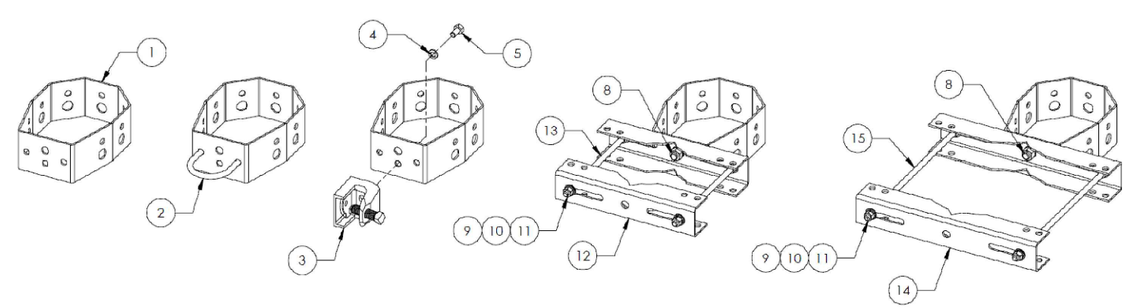

3 A-3.2 COMMSCOPE CS-BL-R2 CABLE MOUNTING KIT DETAIL

SCALE N.T.S.

T-Mobile
8000 WEST 78TH STREET
SUITE 400
EDINA, MN 55439
PH: (952) 833-4145

TRILEAF
1821 WALDEN OFFICE SQUARE
SUITE 500
SCHAUMBURG, IL 60173
PH: (630) 227-0202 F: (630) 227-1212

Insite inc.
Wireless Consulting Services
1S660 MIDWEST ROAD
SUITE 140
OAKBROOK TERRACE, IL 60181

I hereby certify that this plan, specification, or report was prepared by me or under my direct supervision and that I am a duly Licensed Professional Engineer under the laws of the State of Minnesota

Print Name: ROGER ALLAN ZIMMER
Signature: Roger Allan Zimmer
Date 11.11.20 License # 51980

SITE NAME: WATER TOWER
SITE ID: A1P0059A
SITE ADDRESS: 123 JONATHON BLVD CHASKA, MN 55318
PROJECT NUMBER: 649038

NO.	DATE	REV	REVISIONS	BY	APP
3	11/10/20	-	FINAL CD'S REV 0	JG	RZ
2	08/21/20	-	PRELIMINARY CD'S REV B	JP/BS	RZ
1	05/26/20	-	PRELIMINARY CD'S REV A	JP	RZ

ISSUE RECORD
△ REVISION THIS SHEET ● NO REVISION THIS SHEET
THESE DRAWINGS ARE FULL SIZE AND ARE SCALABLE ON 11"X 17" OR 22X34 SHEET SIZE AND ARE NOT REDUCED IN SIZE.

SHEET DESCRIPTION: EQUIPMENT MOUNTING KIT DETAILS

SHEET NUMBER: A-3.2

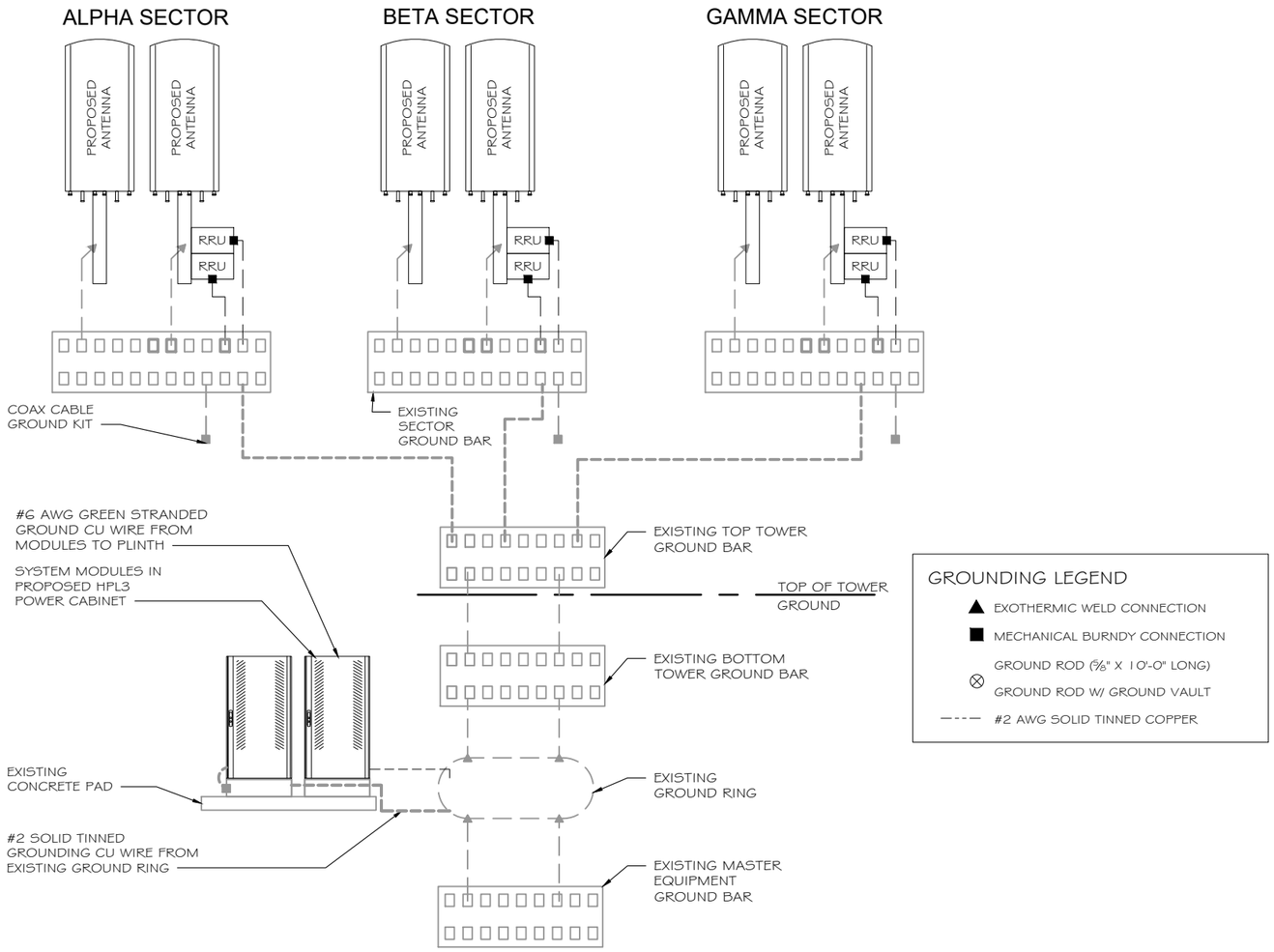

GROUNDING LEGEND

- ▲ EXOTHERMIC WELD CONNECTION
- ■ MECHANICAL BURNDY CONNECTION
- ⊗ GROUND ROD (5/8" X 10'-0" LONG) GROUND ROD W/ GROUND VAULT
- ---- #2 AWG SOLID TINNED COPPER

1 G-1.0 ANTENNA GROUNDING DIAGRAM

SCALE N.T.S.

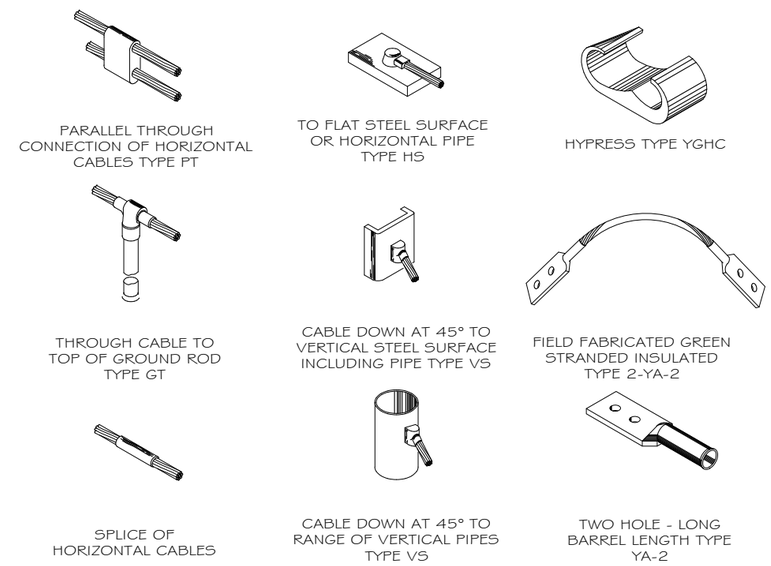

2 G-1.0 EXOTHERMIC CONNECTION DETAILS

SCALE N.T.S.

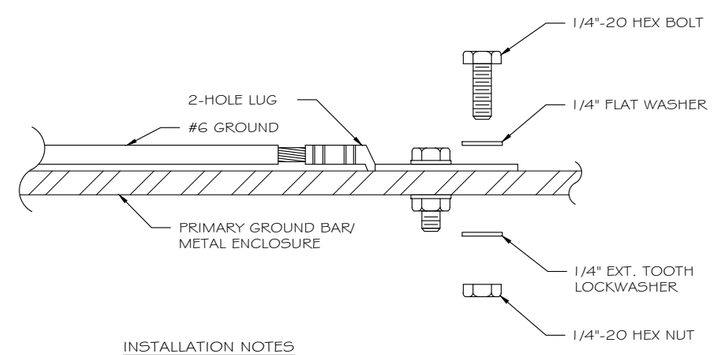

INSTALLATION NOTES

1. SELECT BOLT LENGTH TO PROVIDE A MINIMUM OF 2 EXPOSED THREADS
2. BURNISH MOUNTING SURFACE TO REMOVE PAINT IN THE AREA OF LUG CONTACT
3. APPLY ANTI-OXIDANT COMPOUND TO MATING SURFACE OF LUG AND WIPE CLEAN EXCESS COMPOUND
4. USE SOLID COPPER WIRE AND MECHANICAL 2-HOLE LUG FOR ALL EXTERIOR GROUNDING

3 G-1.0 PRIMARY GROUND BAR DETAIL

SCALE N.T.S.

GROUNDING NOTES

1. THE DETAILS SHOWN ARE GENERAL IN NATURE. ACTUAL GROUNDING INSTALLATION AND CONSTRUCTION MAY VARY DUE TO SITE SPECIFIC CONDITIONS.
2. GROUNDING SYSTEM SHALL BE TESTED PER SPECIFICATIONS AND SHALL HAVE A RESISTANCE OF 5 OHMS OR LESS.
3. GROUNDING PLAN WAS PREPARED PRIOR TO THE COMPLETION OF THE GEO-TECHNICAL REPORT AND TOWER FOUNDATION DESIGN. THE LAYOUT AND RADIALS AND GROUNDING ROD ARE APPROX. IN NATURE AND MAY NEED TO BE ADJUSTED IN THE FIELD.
4. GROUND RODS SHOULD NOT EXTEND THROUGH THE TOWER FOUNDATION OR OTHER STRUCTURAL ELEMENTS WITHOUT WRITTEN APPROVAL FROM THE ARCHITECT OR ENGINEER.

EXOTHERMIC CONNECTION NOTES

1. ALL ELECTRICAL WORK SHALL BE IN ACCORDANCE WITH ALL LOCAL, STATE AND NATIONAL ELECTRICAL CODE.
2. ALL GROUNDING SHALL CONFORM WITH ARTICLE 250 OF THE NATIONAL ELECTRICAL CODE. SEE GROUNDING NOTES.
3. ALL WIRES AND CABLES FOR POWER AND LIGHTING SHALL BE INSTALLED IN GALVANIZED RIGID STEEL CONDUIT OR FLEXIBLE LIQUID TIGHT CONDUIT AS INDICATED ON DRAWING,
4. GROUND COAXIAL CABLE SHIELDS AT BOTH ENDS WITH COAX CABLE GROUNDING KITS AND INSTALL WEATHER PROOFING KIT AT EACH CONNECTION.
5. GROUNDING CONDUCTORS ROUTE SHALL BE ALONG THE SHORTEST AND STRAIGHTEST PATH POSSIBLE. EXCEPT WERE NOTED OTHERWISE.
6. NOTIFY ALL LOCAL UTILITY COMPANIES PRIOR TO ANY INSTALLATION.
7. ALL "CADWELDS" ABOVE FINISHED GRADE SHALL BE PAINTED WITH CO-GALVANIZED ZINC ENRICHED PAINT TO MATCH COLOR OBJECT BONDED TO.

T-Mobile
8000 WEST 78TH STREET
SUITE 400
EDINA, MN 55439
PH: (952) 833-4145

TRILEAF
1821 WALDEN OFFICE SQUARE
SUITE 500
SCHAUMBURG, IL 60173
PH: (630) 227-0202 F: (630) 227-1212

Insite inc.
Wireless Consulting Services
1S660 MIDWEST ROAD
SUITE 140
OAKBROOK TERRACE, IL 60181

I hereby certify that this plan, specification, or report was prepared by me or under my direct supervision and that I am a duly Licensed Professional Engineer under the laws of the State of Minnesota

Print Name: ROGER ALLAN ZIMMER
Signature: Roger Allan Zimmer
Date 11.11.20 License # 51980

SITE NAME: WATER TOWER
SITE ID: A1P0059A
SITE ADDRESS: 123 JONATHON BLVD CHASKA, MN 55318
PROJECT NUMBER: 649038

NO.	DATE	REV	BY	APP
3	11/10/20	-	JG	RZ
2	08/21/20	-	JP/BS	RZ
1	05/26/20	-	JP	RZ

REVISIONS
FINAL CD'S REV 0
PRELIMINARY CD'S REV B
PRELIMINARY CD'S REV A

ISSUE RECORD
△ REVISION THIS SHEET ● NO REVISION THIS SHEET
THESE DRAWINGS ARE FULL SIZE AND ARE SCALABLE ON 11"X 17" OR 22X34 SHEET SIZE AND ARE NOT REDUCED IN SIZE.

SHEET DESCRIPTION: GROUNDING DIAGRAM, DETAILS
SHEET NUMBER: G-1.0

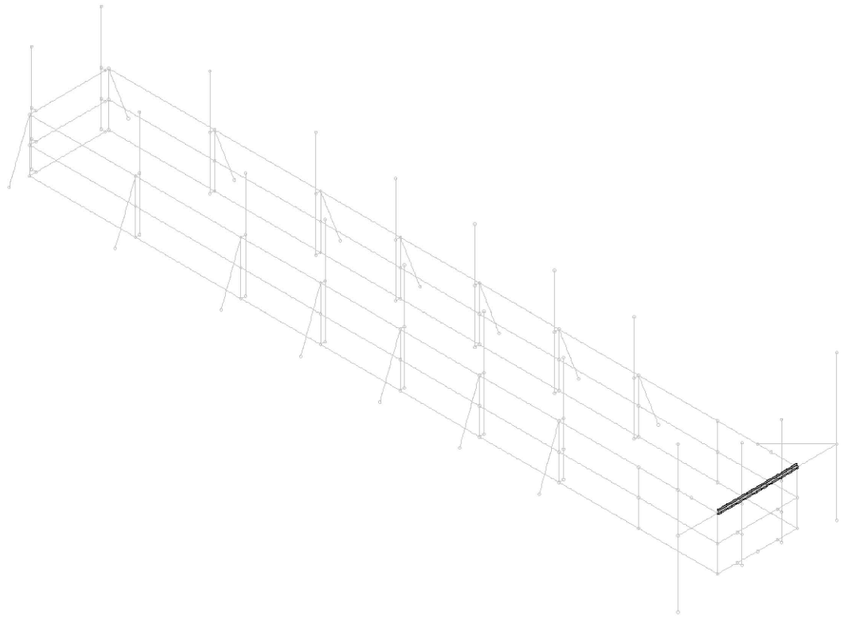

1 S-1.0 ISOMETRIC MODIFICATION VIEW

SCALE N.T.S.

NOTE:
THE DAMAGED PAINT CAUSE FROM DRILLING AND BOLTING THE ANGLE TO THE HANDRAIL TOP NEEDS TO BE PROPERLY PREPARED AND COATED. ALSO STRESS THAT ALL SHAVINGS FROM DRILLING THE ANGLE IRON SHALL BE CLEANED UP IMMEDIATELY. AS MENTIONED PREVIOUSLY, WE FEEL THAT THERE NEEDS TO BE ADDITIONAL S SHEETS TO SHOW THE MOUNTING DETAILS OF THE ANTENNA POLES TO THE HANDRAIL AND THE ANTENNAS AND RADIOS TO THE POLES.

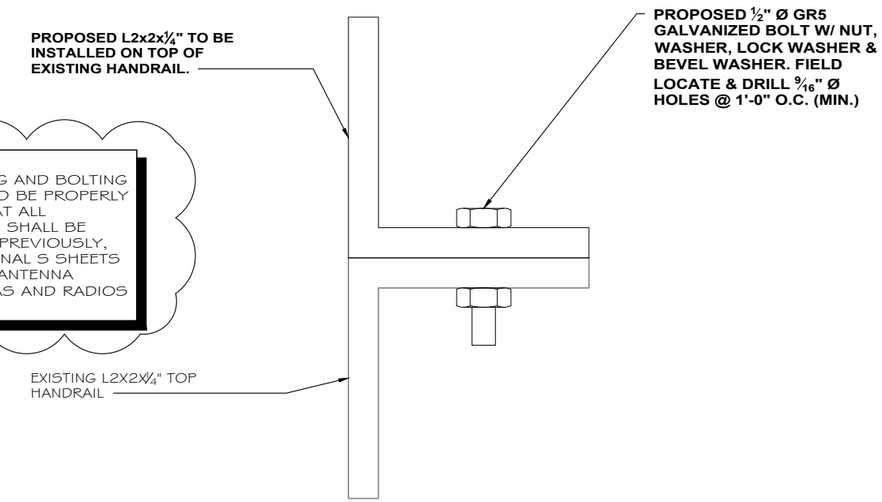

3 S-1.0 HANDRAIL MODIFICATION DETAIL

SCALE N.T.S.

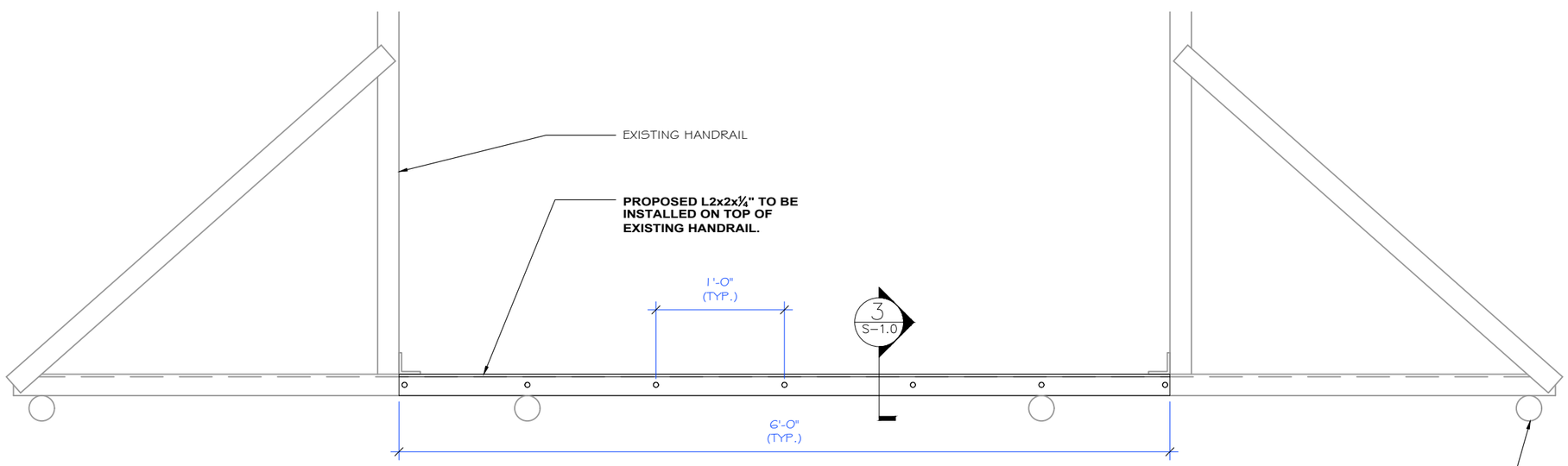

2 S-1.0 MODIFICATION DETAIL

SCALE N.T.S.

T-Mobile
8000 WEST 78TH STREET
SUITE 400
EDINA, MN 55439
PH: (952) 833-4145

TRILEAF
1821 WALDEN OFFICE SQUARE
SUITE 500
SCHAUMBURG, IL 60173
PH: (630) 227-0202 F: (630) 227-1212

Insite inc.
Wireless Consulting Services
1S660 MIDWEST ROAD
SUITE 140
OAKBROOK TERRACE, IL 60181

I hereby certify that this plan, specification, or report was prepared by me or under my direct supervision and that I am a duly Licensed Professional Engineer under the laws of the State of Minnesota

Print Name: ROGER ALLAN ZIMMER
Signature: Roger Allan Zimmer
Date 11.11.20 License # 51980

SITE NAME:
WATER TOWER

SITE ID:
A1P0059A

SITE ADDRESS:
123 JONATHON BLVD
CHASKA, MN 55318

PROJECT NUMBER:
649038

NO.	DATE	REV	REVISIONS	BY	APP.
3	11/10/20	-	FINAL CD'S REV 0	JG	RZ
2	08/21/20	-	PRELIMINARY CD'S REV B	JP/BS	RZ
1	05/26/20	-	PRELIMINARY CD'S REV A	JP	RZ

ISSUE RECORD
NO REVISION THIS SHEET
△ REVISION THIS SHEET
THESE DRAWINGS ARE FULL SIZE AND ARE SCALABLE ON 11"X 17" OR 22X34 SHEET SIZE AND ARE NOT REDUCED IN SIZE.

SHEET DESCRIPTION
STRUCTURAL DETAILS

SHEET NUMBER
S-1.0

REQUEST FOR ACTION
CHASKA CITY COUNCIL
December 7, 2020

Subject: **Approve Second Amendment to Site Agreement with T-Mobile at 123 Jonathan Blvd**

Prepared By: Nate Kabat

Background
In 1996, the City of Chaska entered into a site lease agreement with T-Mobile to place cell equipment on the water tower at 123 Jonathan Boulevard. Since that time the equipment has been affixed to the tower and T-Mobile has adhered to the terms of the lease agreement including making the agreed to payment. The lease payments increase annually by the amount of the CPI, or 4%, whichever is greater. Presently, T-Mobile pays $26,900 per year. The current lease agreement will terminate at the end of this calendar year.

Update
Staff have negotiated an amendment to the lease that will extend the term of T-Mobile's equipment installation on the water tower at 123 Jonathan Boulevard. The amended agreement terms defer to the original except for the following updates:

- The amended lease will take effect Jan. 1, 2021 and will be for five years with five additional five-year extensions.
- Rent will increase to $36,500 for the first year and will continue to escalate as in the original agreement.
- Provisions have been added to ensure effective transitions when the water tower needs to be repainted for maintenance.
- Provisions have been added such that T-Mobile will be required to reimburse the City for staff costs associated with providing access in situations where T-Mobile is conducting maintenance on its equipment during non-business hours for the City.

Recommendation
This lease brings the payment terms up to market and incorporates provisions for fair and effective access for both parties when maintenance is needed. Staff recommends approving the amended lease.

<u>CITY COUNCIL ACTION REQUESTED</u>
Motion to approve second amendment to site agreement with T-Mobile at 123 Jonathan Boulevard.

REQUEST FOR ACTION
CHASKA CITY COUNCIL
12/7/2020

Subject: **Public Hearing: Annual Truth in Taxation Public Hearing**

Prepared By: **Matthew Podhradsky, City Administrator**

Under the Truth in Taxation process, the City and other local taxing jurisdictions are required to hold a public hearing prior to adoption of its annual tax levy and General Fund budget. This process is intended to provide citizen input prior to final development of the budget document by staff and to assure that these comments can be incorporated into staff's final budget recommendation. While this process was modified by the State Legislature in the 2009 session, reducing some of the requirements on cities for this process, the City of Chaska has chosen to follow the same process we have followed in the past to create consistency for our residents and businesses.

Presently Staff is working on preparation of the 2021 General Fund budget. While the Council will hear Staff recommendations for the General Fund budget and the 2021 tax levy at this meeting, as well as take any public comment on these recommendations, it should be noted that no formal action will be taken by the Council until the December 21st Council meeting.

As we discussed over the past couple of months throughout our annual budget process, and as we have discussed over the past several years of our financial forecasting process, there are several things that we have looked at incorporating into our budgeting process to meet our service objectives. These have included increasing our tax levy to support the replacement and maintenance of assets we have already invested into through a formal Capital Improvement Program (CIP), reaffirming our policy on how we establish our tax levy in a given year by focusing more on the items that directly increase our service costs such as new growth in the community and inflation, and planning for issues we foresee in the future so as to be prepared to address them as they come to fruition. Over the course of our budget discussions this fall, we have focused a significant amount of time to some of the economic realities we foresee for the upcoming year due to the COVID 19 Pandemic, looked at options for what we might need to do to meet our budgeting objectives, and things that we may need to delay to reduce the impact to our taxpayers during the 2021 budget year.

<u>Budget Objectives</u>

As always, we start the budget process focusing on the objectives that have been discussed by the Council for establishment of the 2021 budget. These objectives include:

- ***Support budgeting programs that help Chaska strengthen its mission of being "The Best Small Town in Minnesota"***
- ***Maintain existing high-quality service levels***

- ***Limit tax levy growth to capture only new growth in community and inflation, only increasing the levy beyond this point if new service levels/assets are being added***
- ***Fully fund maintenance and replacement of our vehicles, equipment, and physical assets on a regular schedule to ensure sustainability of investments already made***
- ***Fund new programs only after existing, necessary programs are funded***
- ***Budget utilizing a plan that avoids draw-down of City's General Fund Reserves and builds these reserve amounts to a targeted level***
- ***Fully fund levy needs of Street Reconstruction Program***
- ***Develop a budget plan that is sustainable from a resource perspective to support service levels that residents expect***

This last objective was added during the 2019 budget process and led to the completion of a Staffing Study identifying current gaps in our Staffing resource levels and staffing we will need to plan for as our community continues to grow. This year we also added to our General Fund Reserves Objective by expanding it to include developing a plan to build up our General Fund Reserves balance to targeted levels that maintain or improve our current bond ratings.

Budget Environment for 2021

As mentioned previously, the COVID 19 Pandemic crisis which started back in mid-March, has created significant economic issues for us to address as part of this budgeting process. While the most dramatic economic impacts have occurred within our recreational Enterprise Funds, such as the Chaska Community Center and the Chaska Curling and Event Center since they were closed for nearly 5 months and have been restricted on their capacity as we have reopened, we have also seen impacts in General Fund Revenues that forced us not only to make mid-year changes to our 2020 Budget, but will also have an impact on the 2021 budget setting process.

In July of this year, we did amend the adopted 2020 budget to address impacts we have experienced in our General Fund revenues, including revenue sources such as our Administrative Fees from our Enterprise Fund operations and building permits. At the July 6th Council meeting, we did reduce our General Fund expenditures by $750,000 to meet our projected reduction in revenues. This included:

- Reduction in CIP Program Expenditures by $275,000 (mainly Park improvements)
- Reduction in planned position and Staffing Plan implementation by $380,000
- Reduction in Special Events Expenditures by $25,000 in Park and Recreation
- Reduction in a multitude of other expenditures throughout all General Fund departments including things such as travel/continuing education/conferences

As we have discussed over the past two work sessions, with the limited growth we have seen in market values for taxes payable 2021, being able to accomplish all of our budgeting objectives in 2021 will be very challenging, and will require the Council to prioritize the objectives that are most important to try to accomplish in the 2021 budget. This Staff report will lay out the economic environment in which these decisions will have to be made, and the different budgeting options the Council have discussed over the past several weeks.

Market Values

As you will see in the chart below, the City of Chaska will see a 2.80% increase in market values for taxes payable 2021, which is expected to result in a 3.01% increase in tax capacity for 2021.

City of Chaska 2020 Assessment Summary					
	Residential	Commercial/Industrial	Apartment	Ag	Total
2020 EMV	$2,501,694,500	$525,663,000	$227,442,100	$93,168,900	$3,347,968,500
2019 EMV	$2,447,015,300	$507,799,800	$208,750,700	$93,112,400	$3,256,678,200
Total Value Change	$54,679,200	$17,863,200	$18,691,400	$56,500	$91,290,300
New Construction	$42,932,600	$7,061,300	$10,400,000	$0	$60,393,900
Market Change	$11,746,600	$10,801,900	$8,291,400	$56,500	$30,896,400
% New Construction	1.72%	1.34%	4.57%	0.00%	1.80%
% Market Change	0.48%	2.13%	3.97%	0.06%	0.95%
2019 Total % Increase	2.23%	3.52%	8.95%	0.06%	2.80%

This market value increase is significantly less than what we have seen over the past few years, with the market value increase in 2019 alone being 9.14%. As you will see in the chart above, 1.80% of the market value increase represented new construction growth, with approximately 1% being growth in existing properties. Apartments saw the greatest impact in values at 8.95% overall, with about half coming from new construction and half from the market value growth occurring in existing apartment buildings. This market value growth is consistent with the continued low vacancies we have seen in apartment buildings throughout the City. This limited market value growth for 2021 does impact the amount of new revenue we are able to generate for next year without impacting our tax rate.

Below is chart illustrating the past 15-year history of market values in the community and a projection of what we expect for the next few years:

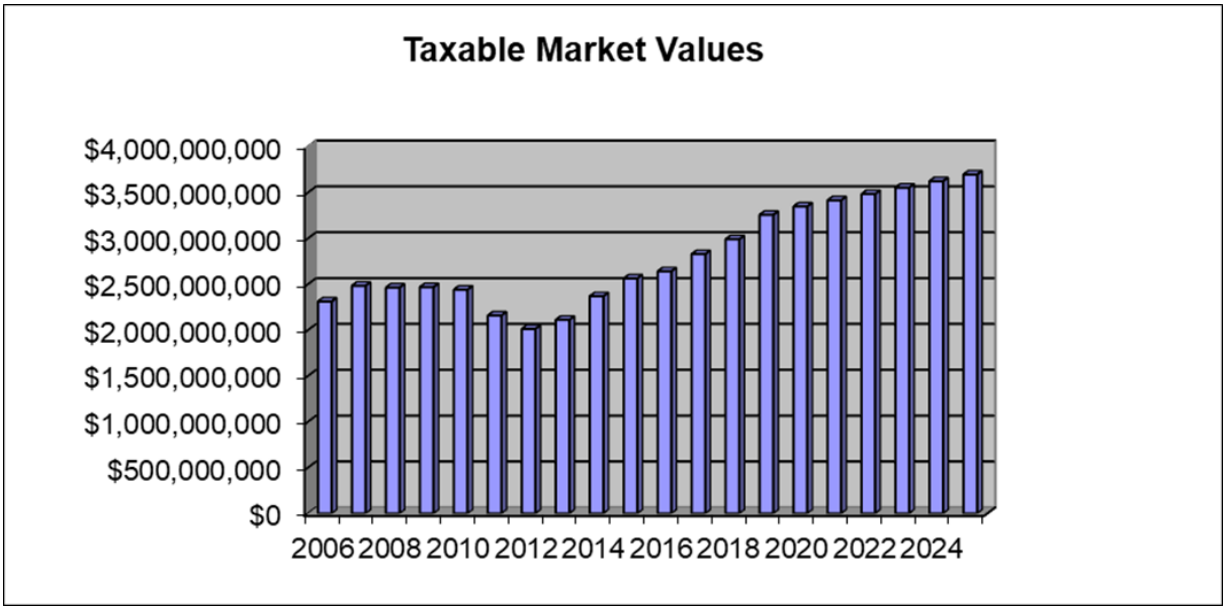

Another area of fluctuation we have seen over the past several years is in Building Permit revenue, making this a very difficult number to budget. With the exception of the Great Recession years of 2007-2010 where we saw a large dip in the amount of revenue we generated through Building Permits, most years between 2001-2019 saw building permit revenues of over $800,000, with many of these years being well over $1 million. In 2020, we adjusted the budget to bring revenues down to just over $600,000, and are planning on keeping this figure budgeted conservatively over the next several years as we expect that we could see some slowdown in market activity with the Pandemic continuing into 2021. This has a major impact on our anticipated revenue generation for 2021 and is another challenge we are having to consider as we establish the 2021 budget. Below is a chart illustrating the building permit activity we expect to see:

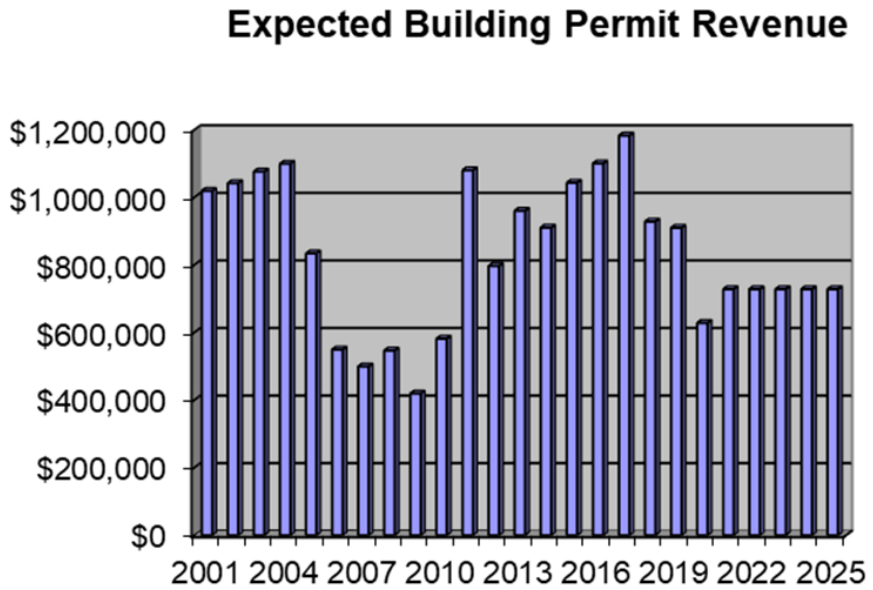

While we have seen a stagnation of both Market Value increases in the community and a reduction in building permit activity associated with the Pandemic, one area that Staff has continued to see continued positive growth is in our electric revenue coming into the General Fund. We have seen this with the opening of several data centers in the community, as well as additions onto existing industrial buildings in the community we continue to see. We have also started to see an impact from the increase in residential usage in the community. Currently the City takes 10% of its revenue from the Electric Fund as transfer that helps support General Fund activities. This has been structured to be a Payment in Lieu of Taxes (PILOT) Fee to the General Fund to support the Electric Fund's use of general city assets such as right of way for providing service in the community.

We are seeing this transfer continue to grow, as it is based on 10% of our overall sales within the Electric Department. It should be noted that while this is a 10% fee to the Electric Fund, our rates are still very competitive with our main competitors such as Xcel and MN Valley Electric Cooperative. In our comparison for this year, Chaska Electric was approximately 9% lower than Xcel for our residential rates with us being very similar to MN Valley. This compares with us being 7% lower in 2019, which means that the value to our residents has continued to improve. The growth in this transfer does help to mitigate some of the reductions we are seeing in other revenue sources.

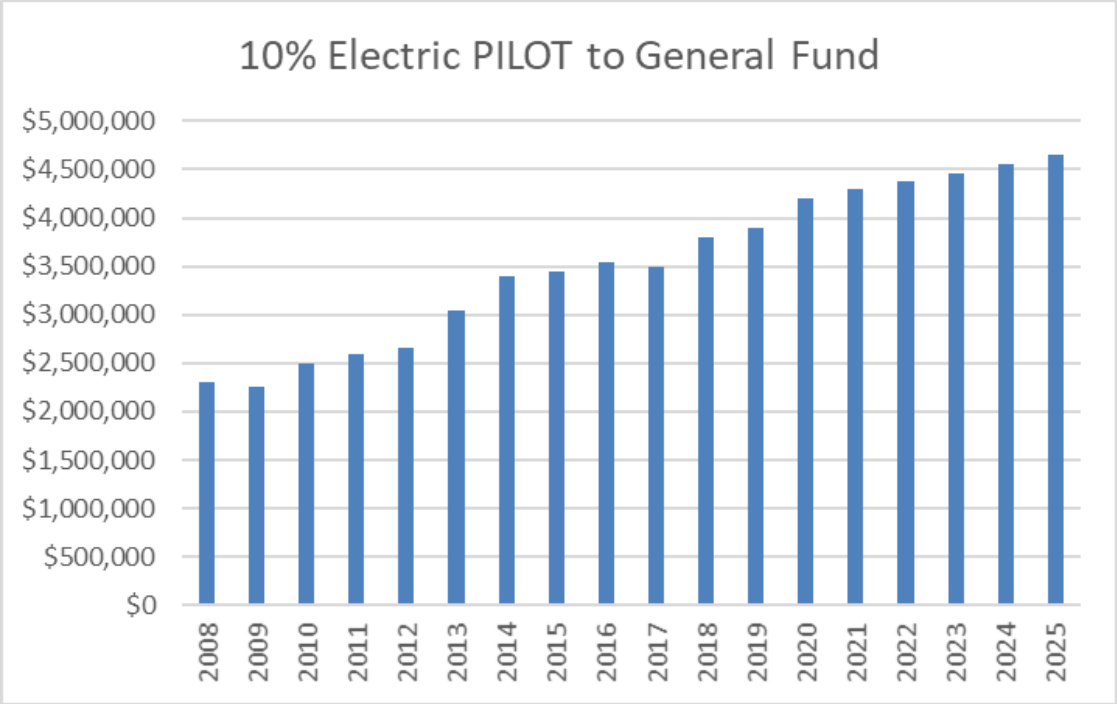

One area that we continue to see a drastic change, and what we expect to be a permanent, is in our Local Government Aid allocation from the State. As I have discussed with the Council this year, in the early part of last decade, our LGA allocation was as high as $1,000,000, with it dropping to nearly $0 in 2007. This changed in 2014 when the State changed their formula for LGA allocation, and we once again saw approximately $500,000 of LGA payments each year. In

2016, we saw this number drop to just over $250,000 because of the reincorporation of value from our decertified TIF District #4, where it was in 2017 as well. In 2018, this number went to just over $1,000, creating a significant hole in our budget. To address this, the Council in 2018 did increase the tax levy to recapture half of that lost aid ($128,035), because of the significant impact it would have had to our service levels. In 2020, the amount of LGA went to just over $14,000, and for 2021 is now officially certified as $0 of LGA in our budget. We expect it to stay this way moving forward. It should be noted that when we saw the large drop of approximately $1 million between 2003-2007, we did not levy to replace any of this lost aid. While we did see increasing market values during this same period, which did help mitigate some of this loss in LGA, this permanent loss in aid was never fully recouped through other revenue sources, which has continued to make this an issue that has affected us in our annual budgeting process ever since.

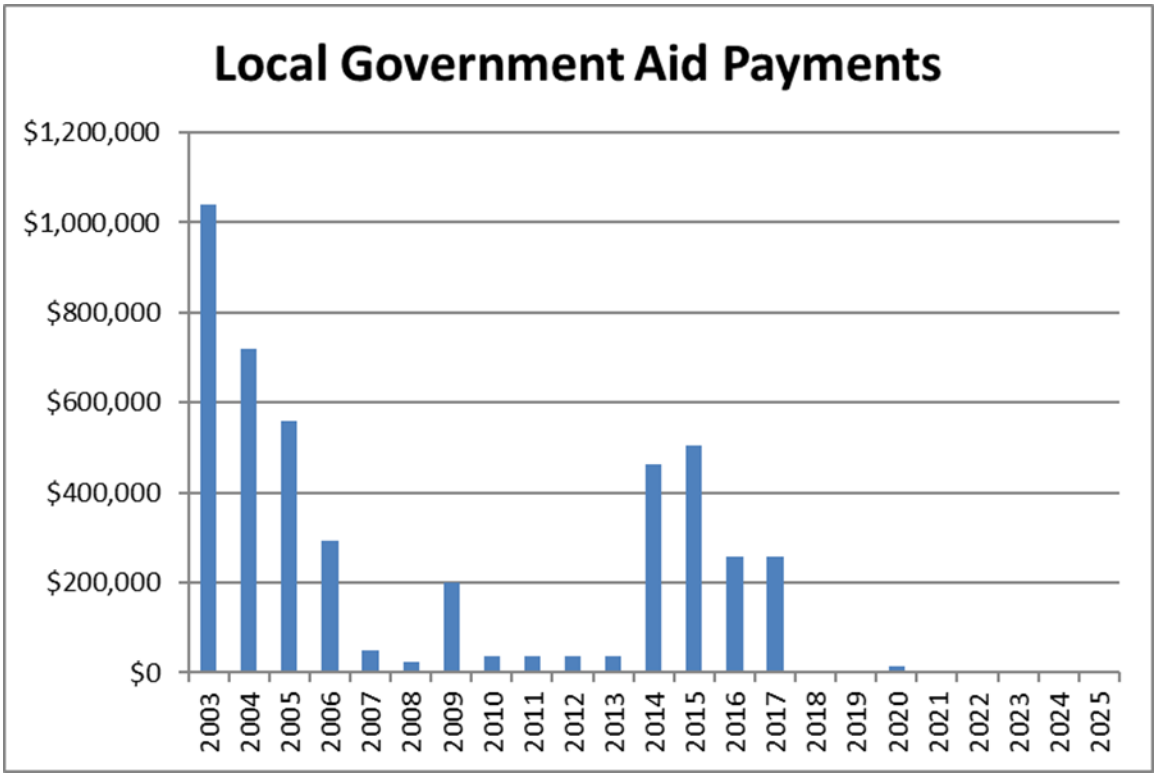

Discussion Items for 2021 Budget

Over the course of our budget process this Fall, Council has discussed priorities from previous years and priorities new to this year. Council also discussed approaches to address these needs considering the revenue challenges we expect in 2021.

Priorities from Previous Years Include:

1. Continued utilization of our tax levy policy
2. Annual projects to be funded through our Capital Improvement Program and the impact of revenue reduction on being able to fully implement the CIP in 2021
3. Continued implementation of our Staffing Study and the impacts of economy on the timing of implementation

Recall, in the 2020 budget year, we moved to implement the first of a four-year plan to address the Staffing Study's identified needs.

In addition to these items, two new items have emerged to consider in the 2021 budget year:

4. Needs identified in our recent Community Conversations on Policing review
5. Needs identified in our most recent bond rating reviews regarding our General Fund Reserve policy

I will spend some time discussing each of these separately.

1. Establishing tax levy based on policy:

For three decades, the City of Chaska had a policy in place for the establishment of the annual tax levy for the City. This policy stated that the City's objective was to have a constant tax rate, and that the levy would increase annually based on the increase in tax capacity in the community over the past year. For instance, if the tax capacity (which is based on market values) increased by 5% in any given year, the levy would also increase by 5%, which would keep our tax rate the same. Theoretically, if a resident's property value stayed the same from one year to the next, the taxes on their property would not increase. They would only increase if there was an increase in value.

In 2015, the Council officially changed that policy to have our levy increase reflect the actual items that have a direct impact on the cost of services we provide: new growth, inflation and the addition of any new programs to our budget.

Based on that policy, for 2021, the percentage of new growth in the community is approximately 1.85%, with 1.68% growth occurring in inflation. This would say that our operational levy should increase by 3.53% to accommodate these increases in service costs. The only other increase would come from any additional services/new items being introduced to the Budget for the upcoming year. With the tax capacity going up by 3.01% for 2021, this would mean that the tax rate would go up by 0.254% percentage points or 0.88% if we to only increase by the base amount.

In a normal year, we would expect that this increase would be able to cover our base level programs, such as our CIP, and that we would only need to increase beyond this amount if we were trying to implement a new program, such as our Staffing Study recommendations. However, as we will see in the next section, with significant impacts in our revenue stream because of challenges with the economy, we are not able to fully fund our base level services, such as our CIP with this base levy increase.

2. Continued implementation of our Full CIP

Since 2012, we have discussed the importance of reinvesting back into the assets we have in the community if we are going to keep them in good condition. In the Decision Resources Survey results the Council had presented last year, it showed that 68% of our residents favored increasing taxes if it meant that we could help maintain the assets and services we have already invested into.

In doing a study of our existing assets back in 2013, it was determined that in our General Government Services we were approximately $1 million short annually in being able to properly fund the replacement of our assets such as parks, road, trails, etc… To address this, the Council decided that year to implement a program over a 4-year period, increasing revenues to the CIP program by $250,000 each year until fully implemented. In 2017, we finished this 4-year ramp up of revenue, which has since allowed us to fund $1 million annually towards our CIP activities.

As mentioned previously, with the impact of the COVID 19 Pandemic on our budgeted revenues, we did have to cut back on our CIP mid-year in 2020 to reduce it by $275,000. This came mainly through deferring planned park playground equipment replacement until a future year. As we look at the 2021 budget, and the reduction in revenues we expect, we will be short by $300,000 in being able to fully fund our CIP program. If we were not to fund this $300,000, Staff would still recommend completing our Pavement Management Plan (Sealcoating and Overlays) along with our Trail Overlay program. What would get pushed again would be playground rehab in our Cortina Woods neighborhood park, which is nearly 30 years old, is failing and does not meet ADA standards. While the Council could decide not to fund this, the impact will be for the City to continue to fall behind on our asset maintenance activities, which over time can have a significant cumulative effect. If the Council were to levy an additional $300,000 to address this gap in our CIP program, the following would be the activities residents should expect to see in 2021:

2021:
Street Sealcoat/Overlay: $475,000
Trail Upgrade/Overlay: $60,000
New Pedestrian Bridge on Main Trail to replace failing culverts: 60,000
*Sports Court Resurfacing at Chaska Town Course: $30,000
Fire Station Entry Sidewalk Replacement/Address ADA Issues: $50,000
MSB Annual Door/Hoist/General: $45,000
*Cortina Woods Park Rehab: $135,000
*Clover Hockey Rink Rehab: $70,000
*Lion's Park Shelter: $75,000 (partner project with the Chaska Lions)

*Indicate projects that the added $300,000 levy would support

As you can see from the lists above, the CIP program is really getting to properly taking care of the assets we have already invested into. They are all critical to make sure that we do not spend more money in the future replacing things that could have been preserved if properly maintained. Also, maintaining park equipment is critical to user safety.

As we discussed during the establishment of the Preliminary Maximum Levy back in September, the Council all concurred that this was a priority and that while it would require an addition of $300,000 to the levy, that we needed to move forward with the full program so as not to get any further behind. The amount that was certified in the Preliminary Tax Levy does include this and has been built into our recommended General Fund Budget you are seeing here today.

3. Staffing Study Implementation

As Council is aware, one of the new programs that was added in 2020 was the implementation of filling the identified gap in our Staffing levels over a 4-year period. As a result of our Council/Department Head retreat in 2017, and identifying that there was a feeling that our staffing resource levels were not adequate to sustain our current service levels/expectations going into the future, the City did hire Baker Tilly (the City's financial advisor) to complete a Staffing Study on our organization. The object of the study was to look at two things:

- Identify any gap we have in our current staffing resource levels
- Identify what we will have to plan for over the next 20 years as we move to full development

The results of this staffing study found that we were 15.8 employees short in our entire organization to be able to be staffed properly to provide our current service levels. The study also identified that after this gap is filled, we would need to plan for an additional 57.2 employees over the next 20 years to be staffed at the appropriate levels to continue to provide our current service levels in a sustainable way. While this future number is large, it is important to realize that we will grow by almost 10,000 additional residents as well as businesses over the next 20 years. Also, when you break this down into annual growth, it equates to about 2.86 additional employees each year, which is less than the 3.86 additional employees we have added over the past 20 years.

The greatest and most immediate concern identified from the results of this staffing study is the current gap we have in employees to be able to properly provide the service levels we currently provide to our residents and businesses. While the gap analysis found that our largest gap exists in building maintenance, where we had no employees solely dedicated to this task, there were other gaps identified throughout the organization. Specifically, the analysis found a shortfall in the following areas:

- Administration: 1 dedicated Economic Development Coordinator and 1 additional HR Generalist
- Administrative Services: 1 additional Network/Database Support Person
- Community Development: 1 Additional Planner
- Engineering: Assistant City Engineer
- Public Works: 6 Dedicated Building Maintenance Personnel (1 Foreman, 1 lead and 4 maintenance workers), 1 Storm Water Maintenance Worker, 1 Street Maintenance Worker and 1 Park Maintenance Worker
- Water/Sewer: 2 Additional Water/Sewer Maintenance Workers

As Council may remember, as a part of our budget discussions in 2020, it was decided to start addressing this gap by developing a 4-year plan to both fill these positions and allocate resources towards building maintenance activities. We identified a $1.5 million gap in being able to meet these staffing needs, plus an additional $500,000 to help meet our underfunded building maintenance needs. To fill this gap required an increase of $375,000 to our tax levy each of the next 4-years, with $125,000 coming from our Enterprise Funds to help support these activities. With approval of this plan in the 2020 budget, we did focus on first filling our building maintenance needs, which included hiring of 3 of the 6 identified Building Maintenance positions, with us then focusing on filling our HR Generalist position. Because of revenue

shortfalls identified mid-year, we did have to put a hold on hiring the HR Generalist position but were able to fill our 3 Building Maintenance positions along with putting our first $125,000 towards building maintenance activities.

As we discussed back in September as we established our Preliminary Maximum Tax Levy, if the Council were to move forward with implementation of the 2nd year of this plan, it would require an additional $375,000 levy to meet our Staffing needs, and would require an additional $125,000 coming from our Enterprise funds to help support the overall program as our Staffing Study is a new program. With the current economic conditions, the Council did re-affirm its commitment to the overall program during our September discussions, but did indicate that we should delay the implementation of the remainder of the program by 1 year, waiting until 2022 to move forward. For that reason, this dollar amount was not included in the Preliminary Levy in September, and therefore will wait until 2022 to officially resume.

4. Needs identified in our recent Community Conversations on Policing review

As mentioned previously, one of the emerging issues that has developed this year in Chaska, as well as many communities, is reviewing our community's Policing functions with residents. As Council is aware, the Police Department started in June on this review by holding Community Conversations and has continued this effort by sending survey communication to each of our residents in the community. The goal of this review is to identify any issues or deficiencies in our current policing activities, and to develop a plan for how to address these as we move into the future. We received a lot of good feedback from the public in this review that helps support the efforts we are recommending moving forward with in this budget year.

Some of the trends that we saw with feedback through this process is that our community generally has strong support of our Police Department, but wants to see us improve in areas such as Accountability and Transparency of policies and procedures, building relationships within the community (especially with our growing new populations within the community), being properly trained on crisis intervention and de-escalation strategies, using available tools to proactively identify information essential to properly responding to a call (i.e. Vitals Application) and addressing growing crime trends in our community-such as our growing issues with narcotics use in the community.

To address each of these issues will require investing into areas that we currently do not have resources invested, with immediate recommended strategies Staff has identified including:

- Hiring of additional Patrol Sergeant position. We currently only have 55% of our shifts covered. The Supervisor providing direct-line supervision is critical to providing the necessary support to our Patrol Officers in the field. The addition of this position would allow us to cover 70% of our shifts, which gets us much closer to a desired future outcome of a Sergeant for every shift we cover. Creating this position would create more opportunities to provide training and support to our officers, helping address issues early, help improve customer service objectives, and improving accountability for each of our officers ($50,000 with a July 1st hire)
- Provide 40 hours of Crisis Intervention Training for all sworn officers, reinstitute use of VITALS App and Rejoin the West Metro Drug Task Force to be able to utilize their resources to help address our growing Narcotics issue in the community ($50,000)

While these do require adding additional resources to our budget, our Decision Resources survey has identified that addressing Public Safety issues in the community is one of the top priorities of our residents.

As the Council is aware, this is one of the areas of our discussions back in September that was included in our Preliminary Tax Levy so it is one that we could move forward with should the Council include it in our final levy at our December 21st meeting.

5. Address General Fund Reserve Balance/Policy
An emerging issue identified this year by our Bonding Rating Agency (S&P Global Ratings) is the need to build up our General Fund Reserve Balances to higher levels. With Chaska having a diversity of revenue sources other than taxes, our rating agencies have not in the past required us to hold as much in General Fund reserves as other cities because we have had other revenue sources (i.e. Electric) that have been able to support our operations and debt issuance. While we continue to have a strong overall financial position, in our rating calls this year (done prior to selling debt) our rating agency did indicate that while they were keeping our rating consistent with what it has been since 2006 (AA), we could be in risk of seeing a downgrade in the future if we didn't develop a policy and strategy to address our General Fund reserve independently and to raise the levels of our reserves to levels more consistent with what other cities might see.

With a downgrade in rating making debt more expensive to sell, keeping our current rating or increasing it in the future is to our benefit to help make our dollars stretch further in projects that we need to complete. In general, going down one notch in rating could increase the interest costs on financing by an estimated 8 basis points, with it increasing by an estimated 17.5 basis points if we went down by two notches. 2008 was the last time we saw a change in our bond rating, with it going up two notches from an A+ to an AA rating. Our municipal advisor estimated that with the amount of debt we will likely issue over the next 5-years, going down one notch could end up costing us approximately $850,000 more over the life of the debt, with a two-notch downgrade costing $1.8 Million more over the life of this debt.

This is clearly an important one for the City of Chaska to be able to demonstrate we are making headway on this over this next budget year. Staff recommends we budget an additional $300,000 this year to go specifically to budget reserves. Of this, $100,000 would need to be additional tax levy, with an additional $200,000 coming from our enterprise funds. This is a practice that we will need to continue over the next several years and will also need to include developing a Fund Balance Policy to address how we deal with either surpluses or shortfalls in annual revenue.

As the Council is aware, this was a component of the budget that the entire Council indicated was important to address and felt we needed to move forward with this in the 2021 budget. This was included in the Preliminary Tax Levy established in September and would be able to be enacted as part of the final levy determination on December 21st.

Prioritization in 2021 Budget
As was discussed at the meeting in September were the Council established our Preliminary Maximum Tax Levy, a final decision will have to be made about what if any of these emerging issues will be addressed during the 2021 budget process. As mentioned previously, if the

Council were to just utilize our existing tax levy policy and do nothing else, we would see a 3.53% increase in our Tax Levy. If we were to do this, we would be able to fund everything we currently have in our General Fund budget except for approximately $300,000 of our $1 million CIP program. If we did that, the following would be the impact on a Median Value Home in the community:

Median House Value in 2020: $281,000
Median House Value in 2021: $285,000

Actual City Taxes on Example Home:
2020 Taxes on Example Home: $808
2021 Taxes on Example Home: $829
$21 Annual Increase in Taxes ($1.75 per month)

In our September budget meeting, the Council did identify how they viewed the prioritization of addressing the identified emerging issues, before discussing which if any they felt were important to address in the 2021 budget. Below is a list of the emerging issues in the priority the Council saw in addressing them this year and what the total tax impact would be if you added it to the base levy shown above ($1.75 per month impact):

1. Fully funding the Capital Improvement Program (would require additional $300,000 levy)
   - $3.83 per month impact for Median Value Home
2. Budgeting to address Budget Reserve Issue (would require additional $100,000 levy)
   - $4.58 per month impact for Median Value Home
3. Budgeting to address identified Policing Needs (would require additional $100,000 levy)
   - $5.33 per month impact for Median Value Home
4. Budgeting the 2nd year of Staffing Study implementation (would require additional $375,000 levy)
   - $8.08 per month impact for Median Value Home

In reviewing the options above, in addition to implementing our base tax levy option (based on our base tax levy policy), the Council expressed that they felt it was very important to address priorities #1 and #2 above. With the CIP program, the Council discussed the importance of keeping up with this program, and how getting behind in improvements to our current assets could end up reducing the life of our assets and costing residents of the City more in the long run. They also addressed the Budget Reserve Issue identifying that as a high priority, as not addressing changes in our policy and reserve levels would also have the impact of costing residents more in the long-run to get needed projects completed if our bond rating were to get downgraded. Given the importance of this to future costs, and properly maintaining our assets, it was strongly felt that these two items need to be addressed.

In addition to this, the Council felt it was important to explore further priority #3, and leave the door open to being able to add all or a portion of this to the 2021 budget as investing in public safety issues has been identified as a high priority by our residents in previous community surveys, and investing in addressing identified deficiencies in our Policing service is important to

consider as an outcome of our recent Community Conversations. In September, the Council did ask Staff to provide education opportunities for our residents on these options in our General Fund to seek feedback. To that end, we did produce 4 video segments entitled "Beyond the Budget" where we went into further depth on each of the main new items being explored in the 2021 budget. We also put information out on social media and the web site, with the Chaska Herald also doing an article. At this time, Staff has only received a couple of clarifying questions and no formal feedback to these budget segments.

Finally, regarding Priority #4, the Council felt that this particular item is one that needs to be put on hold for at least 2021 because of current economic conditions. While the Council indicated that they remain committed to addressing the identified issues in our Staffing analysis in the future, they felt that this was not the prudent time to do this given the current uncertainties in the economy. To that end, this item was not included in our Preliminary Tax Levy, and therefore is not an option for the 2021 budget.

Proposed Tax Levy for 2021

To address Priorities 1, 2 and 3 above, the tax levy would need to be established at $11,413,137, which is what we established as the Maximum Tax Levy back in our September meeting. This would be the tax levy for not only our General Fund, but also our EDA, Mt. Pleasant Cemetery, and our current Tax Abatement Agreements. Again, based on the Median Value Home in Chaska, the following would be the tax impact on this example home:

Impact on the Median Valued Home in Chaska:

-Median Value of Home in 2020: $281,000
-Median Value Home in 2021: $285,000

Actual Annual Taxes Paid on Example Home

-2020 Median Value Home City taxes: $808
-2021 Median Value Home City taxes: $872
$64 annual increase ($5.33 per month)

If the Council were to move in this direction and move forward with our base budget, along with addressing in full Priorities 1,2 and 3 above, the following would be the recommended Revenue and Expenditure budgets for our 2021 General Fund Budget:

General Fund Revenues

	2019 Actual	2020 Budget	2021 Budget	Increase	%Increase
Property Tax	$5,700,506	$6,926,682	$7,732,413	$805,731	11.6%
Elec/GasFranchise Fees	4,396,400	4,458,000	4,684,200	$226,200	5.1%
Other Franchise Fees	340,471	330,980	330,500	($480)	-0.1%
License and Permits	1,348,495	711,803	817,885	$106,082	14.9%
Other Revenues	2,038,668	2,702,220	2,642,308	($59,912)	-2.2%
Admin Charges to Funds	3,115,077	3,673,078	3,900,370	$227,292	6.2%
Total Revenue	$16,939,617	$18,802,763	$20,107,676	$1,304,913	6.9%

Department	2019 Actual	2020 Budget	2021 Budget	Increase	%Increase
Council	$166,212	$132,407	$145,078	$12,671	9.57%
Communication	$92,698	$99,747	$112,115	$12,368	12.40%
Administration	$1,007,887	$840,367	$866,591	$26,224	3.12%
Human Resources	$0	$268,201	$286,290	$18,089	6.74%
Elections	$10,063	$42,583	$5,402	-$37,181	-87.31%
Admin Serv-Finance	$1,679,051	$1,691,826	$1,666,915	-$24,911	-1.47%
Admin Serv-IS	$1,164,825	$1,287,435	$1,291,865	$4,430	0.34%
Legal	$117,798	$80,000	$80,400	$400	0.50%
Community Dev.	$934,980	$1,040,727	$991,220	-$49,507	-4.76%
Engineering	$416,046	$393,319	$480,685	$87,366	22.21%
City Hall Bldg	$218,583	$229,735	$239,710	$9,975	4.34%
Building Maint Div	$0	$261,142	$476,253	$215,111	82.37%
Police	$4,537,848	$4,660,754	$5,131,256	$470,502	10.09%
Fire	$1,916,724	$2,306,143	$2,123,571	-$182,572	-7.92%
Civil Defense	$4,880	$5,728	$5,756	$28	0.49%
Public Works Admin	$346,527	$364,719	$417,742	$53,023	14.54%
Streets	$1,582,319	$1,895,298	$1,880,342	-$14,956	-0.79%
Snow Removal	$324,127	$248,302	$247,430	-$872	-0.35%
MSB Building	$242,724	$232,202	$235,081	$2,879	1.24%
Park Maintenance	$1,164,298	$1,132,760	$1,218,315	$85,555	7.55%
ISD 112 Maint	$30,743	$36,183	$37,205	$1,022	2.82%
Tree Control	$27,564	$37,597	$40,720	$3,123	8.31%
Parks Admin	$511,710	$549,578	$541,424	-$8,154	-1.48%
Parks Youth	$161,916	$164,406	$182,178	$17,772	10.81%
Parks Adult	$99,296	$73,716	$97,619	$23,903	32.43%
Firemen's Park	$168,162	$17,034	$121,664	$104,630	614.24%
Parks Skating Rink	$9,406	$11,713	$11,670	-$43	-0.37%
Unallocated	-$1,510,782	$699,141	$1,173,179	$474,038	67.80%
Total	$ 15,425,605	$18,802,763	$20,107,676	$ 1,304,913	6.94%

Comparison to Other Communities

If the all-in tax levy were to increase based on the above assumptions (base levy, plus addressing priorities #1 #2 and #3), it is important to point out that Chaska will remain very competitive as it relates to our City taxes compared to the other municipalities in the Twin Cities. The Chart below shows that if we assume the proposed increase in our General Fund, and at the same time assuming that each of the other cities see no increase in taxes, we will be the 79th lowest out of 86 Metro Area Cities. We would be in the ten lowest tax levies per capita in the Twin Cities, a ranking we have had for several years.

Ranking	City	Taxes	Population	Tax Levy Per Capita
1	Golden Valley	$25,073,034.00	22,715	$1,103.81
2	Wayzata	$5,021,890.00	4,672	$1,074.89
3	Oak Park Heights	$5,263,194.00	4,897	$1,074.78
4	Hopkins	$17,529,684.00	19,555	$896.43
5	St. Anthony Village	$7,424,394.00	8,335	$890.75
6	Mendota Heights	$10,048,724.00	11,747	$855.43
7	Minneapolis	$372,009,000.00	435,855	$853.52
8	Dayton	$5,260,308.00	6,302	$834.70
9	Columbus	$3,326,286.00	4,067	$817.87
10	West St. Paul	$16,801,114.00	21,205	$792.32
74	Chanhassen	$11,741,368.00	26,278	$446.81
77	Mounds View	$5,678,877.00	13,513	$420.25
78	Arden Hills	$4,135,340.00	10,008	$413.20
79	Chaska	$11,412,137.00	27,692	$412.11
80	St. Paul Park	$2,290,346.00	5,611	$408.19
81	Falcon Heights	$2,137,524.00	5,446	$392.49
82	Anoka	$7,303,005.00	18,728	$389.95
83	Vadnais Heights	$4,894,180.00	13,338	$366.94
84	North Oaks	$1,860,000.00	5,320	$349.62
85	Lauderdale	$845,614.00	2,442	$346.28
86	White Bear Lake	$6,908,000.00	25,752	$268.25

Chaska would also remain the lowest tax levy per capita in Carver County.

Recommendation

Staff will be presenting the General Fund budget and going through each of the priorities being considered at the Council at the meeting on Monday night. It should be noted that there is no official action that will be taken by the Council at the meeting Monday. This meeting is simply a time to hear the budget that is being presented, take public comment and to provide feedback on the general direction the Council would like to take as we move into the final stages of our budgeting process for next year. While no formal action will be taken by the Council on Monday, my hope would be that the Council can give their final feedback at this meeting so that Staff is able to bring back to the meeting on December 21st a budget and levy recommendation that matches the direction the City Council would like to move for 2021. It should also be noted that at the December 21st meeting, we will also be moving forward to act on establishing the budgets for all of our Enterprise Funds as well and adopt any rate changes discussed during this year's budget process that will go in to implementing these Enterprise Fund Budgets.

Attached to this Staff report, you will find a Draft of the Administrator's Budget Message for the General Fund for your review.

Based on the schedule that was adopted back in September, the City Council would be considering adoption of the final budget and the final 2021 tax levy at the December 21, 2020 meeting.

CITY COUNCIL ACTION REQUESTED

Motion to close the Truth in Taxation Public Hearing, and to establish December 21, 2020 as the date to consider the adoption of the 2021 budget and final tax levy.

City of Chaska
2021 Budget
DRAFT

2021 Annual Budget

To the Citizens of Chaska, Honorable Mayor, and Chaska City Council:

Submitted for your review is the proposed 2021 Annual Budget for the City of Chaska, along with a review of major issues and opportunities relating to the City's general operations. The budget, as proposed, I believe meets the needs for continuing to provide excellent municipal services, while at the same time meeting the City's objectives that we have established during the budgeting process. This budget addresses the realities that we are experiencing due to the COVID 19 Pandemic Crisis, and the decisions that the Council felt were needed during this budget period not only to address financial realities, but to also make sure that the City continues to address the things that are high priority to the City Council.

As you read this budget, you will find that beyond trying to maintain our current service levels as constant as possible during this difficult time, that a high priority was put on continuing to fully fund our already-established Capital Improvement Program to reinvest back into the assets that are aging in our community. A high priority was also put towards making sure we are working towards keeping our General Fund Reserve balances at a sufficient level to be able to address requirements of our Bond Rating Agency to maintain our already high rating, and that special attention was put towards keeping our public safety services high and responding to the desires of our community gathered during our public input process during the early summer of 2020.

Finally, while we did move forward with starting the 4-year implementation of our Staffing Study in 2020, which helped to fill the gap of 16 employees found to be needed to sustainably provide our services at levels expected by our residents, and had planned to move forward with implementing the 2nd year of this plan in 2021 (which included dollars dedicated to building maintenance activities), the Council did feel that given the economic realities we are facing in 2021 with the COVID 19 crisis that we put this program on hold for at least a year to try to get economically back to normal before moving forward with additional steps in implementing this plan.

The following document will go through in detail these discussions, as well as lay out the data to show what we expect to see over the course of 2021 to help our residents understand the decisions that were made for the 2021 budget year.

2020 Revenue Discussion

While we have seen increases in market values since 2014, 2016 was the first year we saw all the valuation lost during the "Great Recession" recovered in the community. As we go into 2021, we will once again see our valuations in the community continue to rise, but at a lower level than what we have seen for the past 3-4 years. From 2008-2013, Chaska saw an average annual decrease in property values of over 6%, before seeing a

5.24% increase in 2014, a 12.24% increase of property values in 2015, an 8.21% increase in 2016, a 3.18% increase in 2017, a 7.85% increase in 2018, and a 5.72% increase in 2019 and a 9.14% increase in 2020.

For taxes payable 20201, we are seeing a 2.80% increase in our community's taxable market value, which is significantly lower than what we saw over the past 4 years, which averaged 6.47%. Our tax capacity for 2021 is slated to grow 3.01% for 2021.

As we look at 2021, there is uncertainty about what we will see for building in our community due to the continued COVID 19 pandemic. While we continue to have discussions with developers who show an interest in continuing to move forward with both residential and commercial projects in the upcoming year, there is enough uncertainty in the market that we are budgeting a 30% reduction in building permit activity, going from the $1 million we would have normally budgeted down to a more predictable level of $700,000, which can be sustained by the typical residential growth we continue to see in our community. This uncertainty in the market caused the City to project a reduction in revenue for this upcoming year, which does make it more difficult to fund the priorities the Council has for our community.

As the 2021 budget was put together, there were several major budget environmental factors we needed to consider as it related to revenues, including:

- Market Values across the community increased only 2.80% compared to the 9.14% increase we saw last year. This will bring our overall property values in the community to $3.35 billion, a little over $91 million higher than last year. 1.80% of this change came from new construction, with the rest being increased values on existing properties. This 1.8% increase is slightly higher than the 1.35% increase from new construction we saw last year.
- Based on the State formula, the City will no longer receive Local Government Aid to help reduce our tax levy needed. For the first time ever, the amount we are projected to receive in 2021 will be $0 compared to the $14,000 we received in 2020.
- Residential and Commercial building permits in 2020 decreased by about $300,000 compared to what we saw for activity in 2018 and 2019. We are continuing to plan for this decreased amount of activity in 2021 as there is still uncertainty in the market due to COVID 19 for large scale commercial/industrial and large multi-family developments. We have planned a budget of $700,000 as this is what we feel is attainable if we just continued to see our single-family housing move forward as it is. However, if projects that are in the pipeline do move forward in 2021 this could increase this amount about our budgeted level
- We are continuing to see an increase in population, with a steady increase in the number of residential units being built in the community. We expect the population in Chaska to be just over 27,000 in 2021.

- Our Electric Revenue has continued to increase, as we have seen a significant amount of Economic Development activity occur in the last five years, including Data Center development and additions to existing industrial businesses, driving up this usage. This has had a positive impact on the Electric Franchise Fee coming back to our General Fund
- As soon as market-uncertainties go away, we do expect to see Commercial/Industrial development growth continue to increase, as we have now opened up the development area at 212/44 due to the completion of the new interchange at this development area.

During the recession period from 2008-2013, to navigate the financial impacts to our revenue collection to support our budgeted activities, the City needed to defer many planned expenditures as a strategy to balance the budget. When the economy improved after 2013, the City was able to put more emphasis into the projects that we had to defer, which many times were the reinvestment projects into our existing infrastructure and assets.

This renewed emphasis on reinvestment back into our existing infrastructure was demonstrated through the establishment of our Capital Improvement Program. The CIP focused on how to properly maintain the assets in which we have already invested and have a responsibility to keep in good condition moving into the future. In 2014 we started investment into this program, with a 4-year plan for how to fully fund these needs. This 4-year plan increased revenue in the General Fund to support a $1 million gap, with the final $250,000 of this being incorporated into the 2017 budget. With this program now fully funded, we have been able to move forward in making the proper reinvestment back into our existing General Fund Assets, such as roads, trails, and parks.

For the 2021 budget, a large part of the discussion was the shortage of revenue we will experience using our normal tax levy establishment policy due to COVID-related issues. It was identified that under our normal tax levy establishment policies, that we would be short approximately $300,000 of our total $1 million in our CIP program if we took no additional action to address this. As you will see in this document, the Council did decide to increase the amount of levy above and beyond our normal amount established by policy by $300,000 to ensure that this program is fully funded. It was a concern of the Council that if the CIP program were not fully funded that we would continue to fall behind in our asset replacement program, which in the long run could cost us more than if we kept up with this program.

In the 2020 budget, we did turn our attention to addressing the gaps we have had in our staffing levels across the City in past years needed to sustainably meet our service level expectations. Following direction from the City Council in the 2017 Council/Department Head Retreat, focus was put on having our Financial Advisors at Baker Tilly complete a Staffing Study looking not only at what staff we need to plan on going into the future to

keep up with our service level demands in a growing community, but also on any gaps we currently have in being able to sustainably meet our service level expectations in the current environment. Based on this study, we were able to determine that we are were 16 employees short in being able to meet our current service needs, but that once we fill this gap, we could expect that we will need an additional 57 employees City-wide to meet our staffing needs when our community is fully developed in the next 20 years. While we were able to start this program implementation in 2020 with the addition of 3 Building Maintenance Staff and $125,000 dedicated toward our building maintenance activities, we did suspend the implementation of the remainder of the 2020 portion of the program because of the COVID 19 issues. You will see in this budget document that the decision by Council is to continue the delay of this program implementation until at least 2022 when we hope to see the economy bouncing back enough to move forward with this important program.

In addition to our CIP and our Staffing Analysis Implementation, the Council did talk about two additional items in the 2021 budget which were felt to be important. First, the Council felt that it was important to take the feedback from our Bond Rating Agencies who feel that our General Fund Reserve Balances need to be increased to keep up our current high bond rating. Seeing a downgrade in ratings would have a long-term financial impact on the City, so the Council felt it was important that we show that we are taking action on this by deliberately raising additional revenue and setting it aside specifically for our General Fund Reserve. For the 2021 budget, the final decision was to move forward with levying an additional $100,000 for this program, along with moving an additional $200,000 from our Enterprise Funds into the General Fund to support this program, as all of our funds benefit from keeping a higher bond rating.

Finally, following the unrest that occurred nationwide this summer in response to the death of George Floyd at the hands of the Minneapolis Police Department, the Council felt it was very important for us to study our current Policing policies/funding/staffing/etc… to make sure that we felt our Policing services were living up to the high standards all people in our community expect and that we identify any issues that might exist to make sure we are making changes were they are needed. This community feedback process included both live and Zoom versions of a facilitated feedback session, along with a formal survey we provided to our residents to be able to understand different perspectives. While there were many things that came out of this process, the most immediate changes that were recommended included:

- The need for additional Patrol Supervision (additional Sergeant position) to increase the number of shifts we have direct supervision from 55% to 70% of our shifts
- 40 hours of Crisis Intervention Training for every sworn officer in the department
- Re-institute our membership in the VITALS Program, which allows us to have critical information on individuals in our community that may have conditions that would change our strategy for how we respond to a call

- Reinstitute membership in the West Metro Drug Task Force because of a large increase in narcotics cases in our community

Funding these most critical recommendations in our 2021 budget would require us to increase our budget by about $100,000 to start each of these recommended initiatives.

This document will discuss the continued use of our tax levy establishment policy which the Council adopted during our 2014 budgeting process. Our current policy focusses on what the actual driving factors are in setting our tax levy, including actual new growth in our population and inflationary factors, instead of focusing solely on keeping a constant tax rate, which was a past policy direction the City utilized. In this respect we feel that any new increases in tax resources are directly tied to the increased costs we will have to support the level of services we currently provide in the community. This policy also allows us to capture the resources of any new development in the community to make sure all new homes are contributing their "fair share" to support our General Fund services. Capturing this new value has no impact on the taxes paid by existing residences. This tax levy establishment policy goes on to say that we would only increase our tax levy above this amount if we were addressing new items in our budget, and that the levy would increase by an amount that is needed to support the direct cost of these new initiatives.

In this 2021 budget, the items that would be above and beyond our base-level tax levy establishment policy, which the Council has decided are critical to address in 2021 include:

- Levying the additional $300,000 to fully fund our CIP Program
- Levying $100,000 to begin addressing building up our General Fund Reserves to get to proper levels
- Levying $100,000 to address critical items identified in Policing Study

As we will discuss later in this budget, utilizing our base tax levy policy, and addressing these three items above would have the impact on the Median Value Home in the community of $5.33 per month, or $64 over the course of the entire year.

Staff feels that this budget document continues to move forward in taking a more comprehensive look at not just our current operations, but also the future costs of properly maintaining our assets through our CIP Program. While this document delays the process of making sure that we are staffing at proper levels to be able to sustainably meet our service level expectations, we think it addresses higher priorities for 2021 by addressing the three critical areas above that have been identified. While addressing the staffing shortages in the future will be critical, the Council feels these three areas are a higher priority currently and need to move ahead of our staffing study plans now. We also think that it creates a logical nexus between how we set our tax levy and what actual

changes we see in the community that cause us to increase the resources we need to meet our primary service objectives.

Budget Objectives

As with all our budgeting processes, the first place that we start is by establishing the objectives we are trying to accomplish in setting our budget for the upcoming year. Below is the list of those objectives that were used in both the 5-year financial forecast process this year, and the goals that were used in the establishing the proposed 2021 budget you see before you now:

1) *Support budgeting programs that help Chaska strengthen its mission of being "The Best Small Town in Minnesota"*
2) *Maintain existing high-quality service levels, funding new programs only after our existing, necessary programs are funded*
3) *Limit tax levy growth to capture only new growth and inflation*
4) *Fully fund scheduled maintenance and replacement of equipment/property*
5) *Increase levy additionally only if new service levels or assets are being added*
6) *Budget utilizing a plan that avoids draw-down of the City's General Fund reserve*
7) *Fully levy to support our adopted Street Reconstruction Program*
8) *Develop a budget plan that is sustainable from a resource perspective to support the service levels residents expect*

The newest objective on this list is the last one, in which we discuss the importance of resourcing our organization at a level that can sustain the service levels our residents have come to expect. Over the past two years, the City Council has discussed some of the biggest financial challenges the City will face over the next several years, with one of our biggest challenges being able to keep our service levels constant if we do not put sustainable levels of resources to support them.

In the past, the City of Chaska has been very "lean" when it has come to resources used to support the high level of services we provide in the community. As the community grows, and assets such as our facilities get older, these levels of resources will not be sustainable to keep our service levels constant. This is especially true when it comes to the Staffing levels throughout the organization, and the dollars and staffing resources allocated towards maintaining our aging facilities.

In the 2020 budget year, the Council did adopt a plan that would address both identified shortages in staffing, as well as gaps we have in having the resources to maintain our aging facilities. The plan that was developed involved filling our gap of 16 employees at a cost of $1.5 million as well as $500,000 annually towards our building maintenance activities. In 2020 we did implement most of the first year of this plan, hiring 3 new positions dedicated to building maintenance as well as the first $125,000 that goes towards funding these building maintenance activities. Given the economic conditions brought on by COVID 19, we did forgo hiring one of the planned positions in 2020, and

are suggesting that we put a hold on the second year of the program until 2022 to address the economic realities of the pandemic. In our 5-year plan we did plan on re-establishing the implementation of that program next year.

For 2021, besides making sure that we are fully-funding our CIP program which will take an additional $300,000 in levy because of revenue challenges we expect to face in 2021, special attention will begin towards making sure that we are working towards both generating a budget that will not rely on drawdowns in our General Fund Reserve, while at the same time working to build these reserves up to a higher level. Staff feels that it is very important that we take deliberate efforts to bolster our General Fund reserves to make sure that we address comments we have received from our bond rating agency S & P, who has indicated that if we do not work to build these up more that it could have an impact on our bond rating. Changes in our bond rating could mean higher interest rates when we finance projects, which makes this a long-term priority to address. The 2021 budget has built into it $100,000 in additional tax levy dedicated towards this, along with $200,000 coming from our other enterprise funds to support this effort. This is only a first step, and we will need to keep our eye on this as we move into the future.

The 2021 budget will also have us focusing on or objective of maintaining our existing high levels of service in the City, namely in our Police Department. Through our Community Input/Survey process that was completed this summer, it was identified that there a few key initiatives that we should be addressing in the short term to keep our Police Department Heading in the right direction. This includes the addition of one Sergeant position to ensure that we have most of our patrol shifts directly supervised by an on-duty sergeant. Suggested initiatives also include requiring 40 hours of Critical Incident Training for all of our sworn staff in the Police Department, re-engaging in the West Metro Drug Task Force to address the increasing narcotics issue we are seeing in Chaska, and reinstituting membership in the VITALS Program to provide officers with critical information about residents with special needs that may respond better or worse to different strategies used in interaction with them. All these initiatives in 2021 would require $100,000 added to the budget.

Instituting each of the above-described initiatives in 2021 would require an additional tax levy of $500,000. On the Median-Valued Home in Chaska ($285,000) the tax impact would be $5.33 per month in additional costs, or $64 over the course of the entire year. This would require an 8.53% increase in our tax levy. Given that we are seeing a 3.01% increase in our tax capacity for 2021, we would see a 6.13% increase in our tax rate. With this change, we would still be in the top 10 lowest property tax levies per capita in the entire Twin Cities Metropolitan Area (79 lowest out of 86 Cities assuming other cities see no change in their tax levy), and we would be the lowest property tax levy per capita in Carver County.

Tax Levy Establishment Policy

For nearly 30 years, the City of Chaska had a policy of establishing our annual tax levy based on keeping a constant tax rate. Based on this policy, the tax levy would go up by the amount of increase we saw annually in our tax capacity within the City, which is directly related to the amount of market value growth we saw in the City. For instance, if market values (and hence tax capacity) increased in the community by 3.01% (as it will in 2021), the levy could also increase by 3.01% and have no impact on the tax rate in the community. This would mean that if someone's property did not change in taxable market value from one year to the next, that their City taxes would not see any increase.

While the constant tax rate policy worked very well for several years, during our last major recession (2010-2013) we did start to experience some of the practical limitations of this policy. The first practical issue experienced is that not all market value increase is associated with the construction of new buildings. Some of the market value increase also occurs on existing properties as we experience inflationary growth from one year to the next. While the tax rate would not change, a resident's taxes would change unless their market value stayed the same. This often was not the practical reality, as we saw a significant amount of property value growth in existing properties from 2000-2008.

The other issue that we experienced from 2010-2013 was the impact of decreasing market values in the community. As with increasing market values, the same can be said for decreasing market values when trying to keep a constant tax rate. If the market values go down, the tax levy also needs to decrease accordingly to keep the tax rate constant. With an objective of keeping our service levels constant, this was a significant issue the City faced when market values did start to decline. This led to the City modifying its tax levy policy to state that the tax levy would be set to keep the tax rate constant, unless that forced the actual levy to decrease, in which case the tax levy would stay the same. This change was made based on the notion that while property values decreased, the cost for providing these services does not decrease unless a community is willing to reduce the amount of services it provides. Based on this change, and the decrease in market values in 2010-2013, the City of Chaska's tax levy saw a 0% increase during each of those 4 years, staying at an amount of $4,880,354.

Finally, the final practical reality is that if the tax levy change is only tied to the changes in market values, and a large portion of this market value change is in existing properties, this does not really tie the tax levy increases directly to a need for additional services, and therefore levy. Theoretically, it does not cost the City more to provide services for a residence that is already existing, except for our actual inflationary increases in costs from year to year for supplies and labor. Our costs only increase by the amount of new growth that occurs in the community. By focusing only on new growth and our inflationary increase in costs, we are more truly representing the need we have for additional resources to support the services we already provide.

It was during the 2014 budgetary process that Staff recommended we make a permanent change to our tax levy establishment policy to learn from the issues we experienced during the Great Recession. The tax levy policy established in 2014 focuses specifically on looking at the two items that create pressure on our General Fund, if an objective is to keep a constant level of services in the community:

- New construction in the community
- Inflationary increases in the market.

If the City desires to keep service levels constant, it costs more money to provide the same services to new users in the community. Also, market inflationary increases impact the cost of providing our services, regardless if we make any changes in service levels or not. In order to make sure we take these issues into account, our new tax levy policy states that we would set our increase in operational levy based on the percentage market value attributed to new growth, in addition to whatever the inflation rate is running in any given year. In that way, we are able to make sure that all new users are paying their fair share of service costs in the community, and that we take into account that costs go up on an annual basis because of inflation, no matter what policy decisions we make.

The new policy goes on to state that we would only increase the levy beyond this point if we were adding new services, and that the actual cost of providing those new services would determine the amount of additional increase we would need in the tax levy. In the case of the 2021 budget, the two new items that are being added is the $100,000 to put towards increasing our General Fund Reserve, and the $100,000 it would take to fund recommendations coming out of our Community Policing Study. One unique issue that we are facing this year because of COVID 19 and the reductions we are seeing in potential revenue collection in areas other than our tax levy is that in order to fully fund out CIP program for 2021, we would need to levy an additional $300,000. Our hope is that by addressing this particular issue in 2021 that in future years we would not need to have additional levy to support this program and would only need to levy for new construction and inflation if we were going to keep our service levels constant in any given year.

Key Factors in Revenue Forecast

Key factors which impact both the cost of providing services and the City's revenue resources are changes in Chaska's population and households. As the number of households in the community increases, there are increased demands for street maintenance, snow plowing, park usage, recreation, police calls, utility bills, etc. Population and household levels also impact expected revenues from utilities, building permits and property tax levies.

A significant trend that occurred in the early part of the past decade was the increased rate of residential development in the City. In the 1990s, Chaska's residential development remained relatively stable, with an average of 200 new living units per year.

During the 1990s, Chaska's population increased from 11,339 to 17,450. From 2001 to 2005, more than 2400 new living units were approved within new residential subdivisions. In addition, the type of developer shifted from local developers to large national firms. As a result of both increased demand and supply of residential dwellings, a significant increase in new residential dwelling construction activity occurred in the 2003-2005 period. This large amount of growth resulted in a 35% increase in our population from 2000-2010, with our official population being 23,770. This compares to the 8% average increase in population that was experienced across the rest of the Twin Cities Metropolitan Area during the same time period, making Chaska and the Southwest Metro Area one of the fastest growing areas in the entire Twin Cities. This growth resulted in an increase demand for services, and hence an increase in revenue necessary to provide the same level of services in the future to our residents.

From 2008-2013 however, residential development in the metro area decreased significantly because of both over-building and a general downturn in the economy. At the same time, the supply of new available lots within the Chaska area decreased, resulting in a significant downturn in building activity. This resulted in a period of very stagnant residential growth from 2008-early 2012.

This downward trend reversed itself in late 2012, and stabilized, with several new residential developments approved over the past 8 years. Starting in 2013, this included the approvals for several new residential subdivisions both on the north end of Chaska, and in the Southwest quadrant of the community. We also saw very robust growth in our Commercial/Industrial properties, with the addition of the 212 Medical Center, several Data Centers, commercial additions in Hazeltine Plaza, and the expansion of buildings in our existing Industrial Parks. Over this past year, we have seen a continued push in residential development, but have seen less in the way of Commercial/Industrial properties. We did see some expansion activity occur in our existing building in the North Industrial Park, but in general saw less C/I activity move forward with the uncertainty of the economy due to the COVID 19 Pandemic. While we have heard interest in larger C/I projects moving forward in 2021, the general message we have heard is that there continues to be a lot of uncertainty in the market due to the pandemic, and that this could result in little C/I activity in 2021. With the housing market still seeming to be robust, we do expect to see this level of development activity continue with the addition of 120 new residential properties in the community. It is because of the uncertainty in the market that we lowered our budgeted revenue numbers for Building Permits from around $1 million for the year down to $700,000. This is a number we feel we can sustain with the residential growth we have seen. Below is a chart illustrating past population growth and the growth Staff anticipates over the 5-year period.

Year	# of Housholds	# of New	Est. Pop.
2000	6,979	445	17,449
2001	7,394	415	17,746
2002	7,909	515	18,982
2003	8,378	469	20,107
2004	8,854	476	21,250
2005	9,122	268	21,893
2006	9,323	201	22,375
2007	9,553	230	22,927
2008	9,743	190	23,383
2009	9,767	24	23,441
2010	9,832	65	23,652
2011	9,907	75	23,777
2012	10,039	132	24,094
2013	10,173	134	24,415
2014	10,373	200	25,270
2015	10,523	150	25,255
2016	10,673	150	25,652
2017	10,823	150	25,975
2018	10,973	150	26,335
2019	11,093	120	26,623
2020	11,193	100	26,863
2021	11,293	100	27,103
2022	11,393	100	27,343
2023	11,493	100	27,583
2024	11,593	100	27,823

***An analysis of General Fund revenues by major fund source*:**

Total revenues anticipated to fund the 2021 General Fund operating budget are $20,107,676 which is an increase of 6.9% from the amended 2020 budget of $18,802,763. It should be noted that the budget was amended in July of 2020 because of the COVID 19 Pandemic and changes in the economy. The original budget for 2020 was $18,984,708. Compared to this original budget from 2020, the increase for 2021 would be a 5.9% increase.

As you will find on the chart below, Property taxes is the largest source of increased income going into the General Fund budget. One item on this that may not be clear is the while it shows an 11.6% increase in property taxes, that is not the actual percentage of increase of our total property taxes. The reason for this is that our property tax levy does not just fund the General Fund. It also funds the Equipment Acquisition Fund, the EDA, and our Mt. Pleasant Cemetery operations. What the increase in property taxes refers to below is the increase of property taxes we have going into our General Fund as

opposed to 2020. Our total property tax levy went up by 8.53%, with everything above and beyond the $7.7 million in the General Fund going to support these other three tax-levy supported funds.

One other thing to point out with our budgeted revenues is the amount that we are budgeting for our Licenses and Permits. While the amount is approximately $100,000 higher than our amended 2020 budget number, it is about $500,000 less than what we saw for licenses and permits in the 2019 budget. As mentioned previously, we are trying to be much more conservative in especially our building permit fee budgeting as the uncertainty in the market has created uncertainty about whether larger Commercial/Industrial projects that have been discussed will actually move forward. We are budgeting this amount to more closely match what we are seeing for our residential development in the community, as that has continued to be strong and being off on projections for a few homes does not have as large of an impact on our budget as with one large C/I project not moving forward.

Finally, the other main source of income in our General Fund is our Electric Payment in Lieu of Taxes (PILOT) and Gas Franchise Fee, which are budgeted to be over $4.6 million because of continued growth of electric/utility use in our community, and our Administrative Fees that we charge our Enterprise Funds to provide Administrative Services to other departments in the City. The approximate $200,000 increase in 2021 is due mainly to the dollars that we are bringing over from our Utility Funds to help support our efforts of increasing our General Fund Reserves ($100,000 from tax levy and $200,000 from our Utility Funds to help increase our General Fund Reserves). The chart below shows a summary of revenues for the 2021 budget year:

General Fund Revenues

	2019 Actual	2020 Budget	2021 Budget	Increase	%Increase
Property Tax	$5,700,506	$6,926,682	$7,732,413	$805,731	11.6%
Elec/GasFranchise Fees	4,396,400	4,458,000	4,684,200	$226,200	5.1%
Other Franchise Fees	340,471	330,980	330,500	($480)	-0.1%
License and Permits	1,348,495	711,803	817,885	$106,082	14.9%
Other Revenues	2,038,668	2,702,220	2,642,308	($59,912)	-2.2%
Admin Charges to Funds	3,115,077	3,673,078	3,900,370	$227,292	6.2%
Total Revenue	$16,939,617	$18,802,763	$20,107,676	$1,304,913	6.9%

Capital Improvement Program

As was discussed earlier in this document, one of the challenges that was faced with the 2021 budget was the ability to fully fund our Capital Improvement Program. With the

reduction in revenues to our budget because of uncertainties in the economy, and the very small growth we saw in our market values, without additional tax levy, we would be short by $300,000 to fully fund our Capital Improvement Program for 2021.

As we build and bring on new assets into our community, a critical function we have as a local government unit is to plan for the proper maintenance and replacement of these assets, so we always keep them in good working order. Just as we would individually with our own home, the City has the responsibility to be good stewards of our resources and make sure our assets are as good for future generations as they are for us now. If we do not do this, these costs will be passed to future generations who will have to invest more to replace the assets that are lost. This is truly an issue of equity from one generation to the next, making sure we each take on responsibility in asset maintenance.

With us already having to cut back in our CIP activities in 2020 to help balance the budget, and with the Council feeling it was important not to see us get behind two consecutive years in our CIP program because of the needs that exist in the plan, it was decided by the Council to increase our levy by an additional $300,000 in 2021 to make sure that our CIP is fully funded in 2021 at $1 million.

With the CIP fully funded, 2021 will bring several rehabilitation projects to the table, including:

- Street Overlay: $475,000
- Trail Upgrades/Overlays: $60,000
- New Pedestrian Bridge on Main Trail to replace failing culverts: $60,000
- Fire Station Entry Sidewalk Replacement/ADA Issues: $50,000
- MSB Annual Door/Hoist/General: $45,000
- Sports Court Resurfacing at Chaska Town Course: $30,000
- Cortina Woods Park Rehab: $135,000
- Clover Hockey Rink Rehab: $70,000
- Lion's Park Shelter: $75,000 (partner project with the Chaska Lions)

Each of these projects will help make sure our assets stay in great shape as we move into the future, and that we treat each of our assets as a true investment into the community. It should be noted that the last 4 items on this list would be what we would not be able to accomplish in 2021 with filling the $300,000 gap in our CIP Program.

Staffing Gap Analysis/Building Maintenance

As mentioned previously, based on the results of our Staffing Analysis, we did determine that we were 16 employees short to meet our current service levels, and that we had a missing component in our current organization of proper resources and staff dedicated towards Building Maintenance, which is especially important with our aging facilities. The gap identified was $2 million, with $1.5 million being attributed towards tax levy resources and $500,000 being attributed toward Enterprise Fund resources. Based on the

recommended 4-year implementation of this plan to address these needs, this would have $500,000 of additional resources added in 2020, with $375,000 coming from additional tax levy and $125,000 coming from Enterprise Fund Resources. We did plan to fill the following positions/building maintenance gap in 2020, with us being able to accomplish all but the one position in Water/Sewer that we did not do because of changes in the economy mid-year.:

2020 Staffing Study Implementation Plan:

- Building Maintenance Foreman: $105,000
- Building Maintenance Worker: $90,000
- Building Maintenance Worker: $90,000
- Water/Sewer Maintenance Worker: $90,000
- Allocation to Building Maintenance Budget: $125,000

While implementation of this Staffing Study Program will help to make our service delivery more sustainable over time, and address a major gap in our current services, it was decided to put a hold on implementing the second year of the program until at least 2022 because of the uncertainties in the market. While this will continue to be a priority to address, the Council felt that 2021 was not the right year to address this gap. In our 5-year budget planning, we moved implementation of this program out 1 year, with us planning to complete the rest of the implementation of the program over the years 2022-2024.

Property Taxes:

For 2021, to accomplish establishing our base-line budget, address the first step in building up our General Fund Reserves, and addressing the findings of the Police Study, the General Fund budget would require a total levy of $11,413,137. This represents an increase of 8.53% from the 2020 General Fund tax levy and includes the percentage increase for the Mt. Pleasant Cemetery Levy, the EDA Levy, and our annual Tax Abatement Levy. This levy increase would be made up of 3.53% to support the Operating levy (1.68% for inflation and 1.85% for new growth in the community), in addition to $300,000 (3%) that is dedicated towards fully-funding the CIP program for 2021, $100,000 (1%) to address increasing our General Fund Reserves, and $100,000 (1%) towards addressing the findings of the Community Policing Assessment conducted over the past several months. It should be noted that a portion of our total levy goes towards our General Fund Budget, with the remaining going towards our Equipment Acquisition Fund and debt service for our current Downtown Street Reconstruction Program.

It should also be noted that out of this total tax levy amount, $269,755 represents a levy for tax abatement assistance provided in the past. This additional amount represents the 9th year of tax abatement that was provided to the West Creek Corporate Center Development for development of infrastructure to support this new industrial park, along

with some other tax abatement projects including the 212 Medical Center Addition and the Chaska Creek Medical Building. While we are required to officially levy this assistance, the City is a "pass-through" for these funds, with the same amount coming in from this project that goes out for the tax abatement assistance. It does not have an effect on other taxpayers in the community.

Beyond the General Fund Levy, the Chaska Economic Development Authority also has a $171,598 levy. Last year this levy was $165,747. The amount levied for 2021 in the EDA Fund of $171,598 represents the dollars supporting the operations of our Economic Development Activity and was included in the total tax levy amount of $11,413,137.

In summary, the total levy will include:

- Continuation of dollars to support the Downtown Street Reconstruction Program
- $10,741,539 being levied to support General Fund Operations, a portion of Street Reconstruction Debt Service, Mt. Pleasant Cemetery, and existing Equipment Acquisition Fund needs
- $300,000 of additional levy to support fully funding our Capital Improvement Program at $1 million for 2021
- $100,000 being levied to support efforts to increase our General Fund Reserves (this is being combined with $200,000 of support from our Utility Funds)
- $100,000 being levied to support findings of our Community Policing Study, including the addition of one Patrol Sergeant, 40 hours of CIT Training for all sworn officers in the department, reinstituting the VITALS App and rejoining membership in the Southwest Metro Drug Task Force
- $171,598 being levied in the Economic Development Authority Fund for operations
- 269,755 in tax abatement that is generated from the new West Creek Corporate Center Development, 212 Medical Center and Exactec.

The following table summarizes Chaska's actual tax levies (General Levy, EDA, Tax Abatement and Mount Pleasant Cemetery for 2017, 2018 and 2019, along with the proposed 2020 levy:

	2018	2019	2020	2021	Increase	%
General/Equipment Acquisition/EDA/Tax Abatement	$ 9,051,345	$ 9,694,654	$ 10,510,132	$ 11,407,137	$ 897,005	8.5%
Mt Pleasant	$ 6,000	$ 6,000	$ 6,000	$ 6,000	$ -	0.0%
Total Operating and Special Levy	$ 9,057,345	$ 9,700,654	$ 10,516,132	$ 11,413,137	$ 897,005	8.5%

Impact of Tax Levy on Property Owners

To understand the impact of the tax levy on individual taxpayers, three factors must be analyzed:

- Market Value Changes

- Any changes in the Tax Capacity Formulas Established by the State
- The City's Tax Levy

Overall, Chaska's market values, excluding tax-exempt property, increased by $91,290,300 to $3,347,968,500 an overall increase of 2.80%. The largest percentage increase that we saw in 2020 was in Apartment properties, as it was in 2019, with an 8.95% overall increase. 4.57% of that came from construction of new residential rental units in the community, with the other 3.97% coming from increasing values in existing rental units.

The other major area of increase we saw was in Commercial/Industrial properties, with a 3.52% increase in market values. 1.34% of that growth came from new construction, meaning that most of the increase was experienced in existing Commercial/Industrial buildings. This is consistent with what we are seeing especially in the Industrial market that there are very few vacant properties existing in the community. Owner-occupied Residential properties also had an increase, with the overall increase in this type of property being at 2.23%. New construction accounted for 1.72% of this change, with the remainder of the change coming from increases in existing home values. Below is a summary of the Market Values for taxes payable 2021 (assessed 2020) as established by the County Assessor's office:

City of Chaska 2020 Assessment Summary

	Residential	Commercial/Industrial	Apartment	Ag	Total
2020 EMV	$2,501,694,500	$525,663,000	$227,442,100	$93,168,900	$3,347,968,500
2019 EMV	$2,447,015,300	$507,799,800	$208,750,700	$93,112,400	$3,256,678,200
Total Value Change	$54,679,200	$17,863,200	$18,691,400	$56,500	$91,290,300
New Construction	$42,932,600	$7,061,300	$10,400,000	$0	$60,393,900
Market Change	$11,746,600	$10,801,900	$8,291,400	$56,500	$30,896,400
% New Construction	1.72%	1.34%	4.57%	0.00%	1.80%
% Market Change	0.48%	2.13%	3.97%	0.06%	0.95%
2019 Total % Increase	2.23%	3.52%	8.95%	0.06%	2.80%

Using the 2020 market values and the classification formulas established by the State, the County Auditor has calculated Chaska's 2020 (for taxes payable 2021) gross tax capacity to be $33,160,020, an increase of 3.01% To calculate the net tax capacity used for determining Chaska's tax rate, a reduction must be made for captured tax increment

and fiscal disparity contributions. Our current captured TIF value is $1,213,961 with Chaska's fiscal disparities contribution for 2021 being $3,959,874 resulting in a net tax capacity of $33,160,020, an increase of 3.01%.

		2020		2021		Increase	%
Gross Tax Capacity	$	37,098,073	$	38,333,855	$	1,235,782	3.3%
TIF	$	1,209,027	$	1,213,961	$	4,934	0.4%
Fiscal Disparities	$	3,698,495	$	3,959,874	$	261,379	7.1%
Other	$	-	$	-	$	-	0.0%
Net tax capacity	$	32,190,551	$	33,160,020	$	969,469	3.0%

Based on these estimates, Carver County has estimated Chaska's 2021 General Fund tax rate to be 30.497%. This is an increase of 6.1% from 2020, where we had a tax rate of 28.738%. With the median value of home going up from $281,000 to $285,000 in the community (1.42%), this would bring the median-valued home's City taxes from $808 in 2020 to $872 in 2021, or an increase of $5.33 per month or $64 for the year. As always, the actual amount of impact is completely dependent on the actual market value change experienced on that property over the past year.

While Chaska's General Fund operational tax levy will go up in 2021, Chaska will continue to maintain one of the lowest City tax levies per capita of any City in the metropolitan area, ranking eighth lowest in the entire Metro Area (79 out of 82 Cities). It also remains the lowest tax levy per capita of any City in Carver County as well. This analysis is comparing the 2021 tax levy for Chaska and assuming a 0% increase in other Communities' tax levies that we are comparing.

A major concern of property taxpayers is the level of property taxes necessary to fund City services. In considering property taxes in Chaska, three points should be highlighted. First, property taxes account for just 46% of Chaska's tax-levy supported funds operating revenues. Secondly, Chaska has always ranked extremely low amongst other metropolitan cities when it comes to total City property tax levels. In the latest Department of Revenue Survey looking at 2020 City tax data, out of 86 local units of government looked at in the metropolitan area, Chaska ranked 79th lowest in City taxes per capita. This is comparing our data assuming our increase for 2021 and comparing it to the other cities 2020 data. In this sense, Chaska has continued to perform very well when comparing our City property tax level compared to all of communities in the metropolitan area. It has allowed the City to keep a competitive edge when it relates to other municipalities in the metropolitan area. Third, we continue to be the lowest tax levy per capita in Carver County.

Ranking	City	Taxes	Population	Tax Levy Per Capita
1	Golden Valley	$25,073,034.00	22,715	$1,103.81
2	Wayzata	$5,021,890.00	4,672	$1,074.89
3	Oak Park Heights	$5,263,194.00	4,897	$1,074.78
4	Hopkins	$17,529,684.00	19,555	$896.43
5	St. Anthony Village	$7,424,394.00	8,335	$890.75
6	Mendota Heights	$10,048,724.00	11,747	$855.43
7	Minneapolis	$372,009,000.00	435,855	$853.52
8	Dayton	$5,260,308.00	6,302	$834.70
9	Columbus	$3,326,286.00	4,067	$817.87
10	West St. Paul	$16,801,114.00	21,205	$792.32
36	Carver	$3,038,375.00	4,990	$608.89
51	Victoria	$5,708,000.00	10,585	$539.25
77	Mounds View	$5,678,877.00	13,513	$420.25
78	Arden Hills	$4,135,340.00	10,008	$413.20
79	Chaska	$11,412,137.00	27,692	$412.11
80	St. Paul Park	$2,290,346.00	5,611	$408.19
81	Falcon Heights	$2,137,524.00	5,446	$392.49
82	Anoka	$7,303,005.00	18,728	$389.95
83	Vadnais Heights	$4,894,180.00	13,338	$366.94
84	North Oaks	$1,860,000.00	5,320	$349.62
85	Lauderdale	$845,614.00	2,442	$346.28
86	White Bear Lake	$6,908,000.00	25,752	$268.25

Intergovernmental Revenues:

One significant change we experienced starting in 2018 and has continued into 2021 is the reduction of our Local Government Aid by approximately $250,000, bring us down to nearly $0 for the past 3 years. In 2020 the amount we had certified $14,171. In 2021, we received notification that our certified amount is $0, meaning this will be the first time we receive no Local Government Aid at all. We expect this will continue at this level into the future. This change is due to the State's LGA formula, the increase in market values we have seen in the community over the past couple of years, and the decertification of our large TIF District #4 in 2014, which reincorporated a large taxable market value back into the community in that following year.

In 2003, the City of Chaska received approximately $1 million in LGA from the State on an annual basis. This was a very significant hit to the City's revenues, representing approximately 10% of our overall revenues. The loss of nearly $1 million in revenue was a significant reason that we started to get behind in the properly staffing of our services and have had a difficult time catching back up ever since.

In 2014, the City received did see an allocation of LGA in the amount of $462,000, with it going to just over $500,000 in 2015 and $550,000 in 2016. In 2017, we once again saw this amount reduced to just under $250,000. With it now officially certified at $0, we do not expect we will see this revenue source again int the near future. Below is a chart of our experience for local government aid, and what we expect to see in LGA over the next 5-year period.

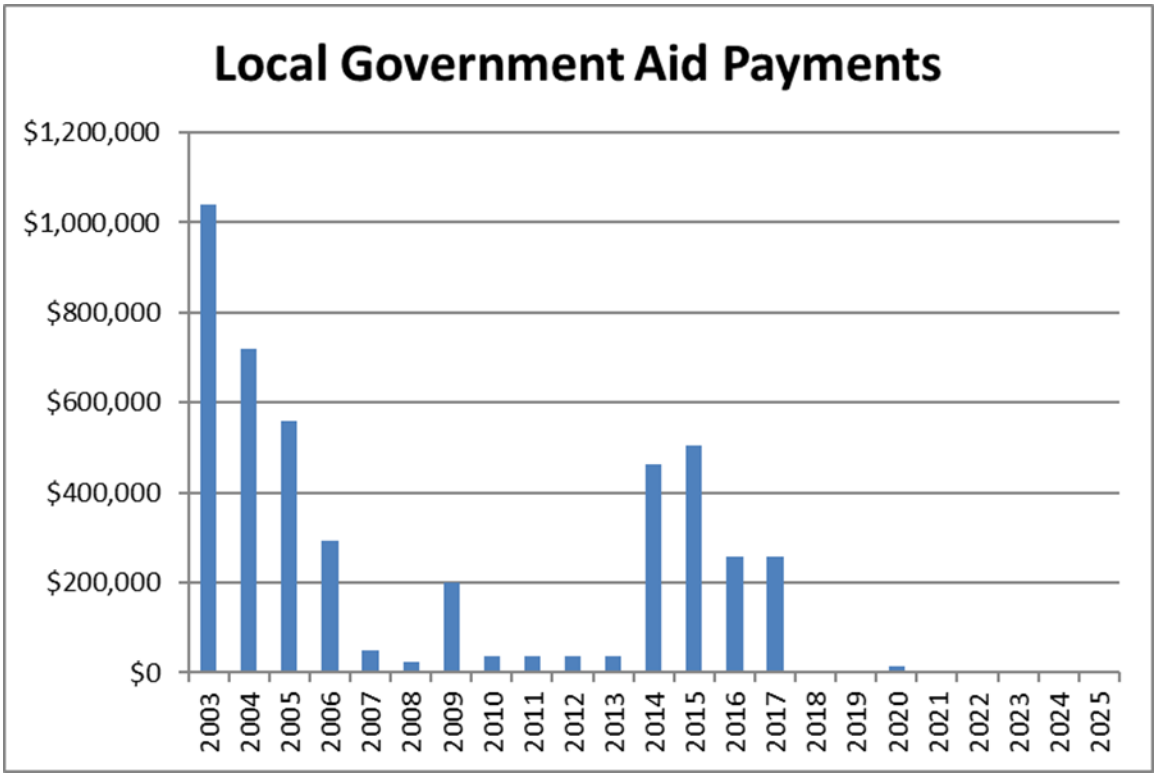

It should be noted that when the City saw the $250,000 LGA amount go to $1,000 in 2018, the Council did decide to levy back half of that amount ($125,000), which has remained in the budget ever since, and is included in the 2021 budgeted revenues. However, it continues to be important to point out that this loss of nearly $1 million from the State from that 2004 period did have a long-term impact on the City and is a large reason why we are now having to have the discussions about the gap that we see in our staffing levels to sustainably meet our service level expectations and a significant reason we got behind on building maintenance activities.

Licenses and Permits

From 2008-2011, Chaska and the rest of the metropolitan area experienced a dramatic slowdown in not only residential development, but development in all sectors of the market. As a result of the downturn, building permit revenues dropped significantly. Up

through 2005, this revenue source was over $1 million per year, and in 2010 brought in approximately $500,000. In mid-2011, we did start to see this change as some larger Commercial/Industrial development activity did start to occur, and we ended 2011 with over $1 million in permit revenue. While we continued to see good activity during 2012 and saw positive movement since 2013, the consistency and predictability of this revenue stream has continued to be volatile and can be somewhat difficult to project from year to year.

With the downturn in the economy in early 2020 due to the pandemic, we did see the permit revenue we expected to see be reduced significantly. While we continued to see relatively steady single-family residential development, we did see a big downturn in Commercial/Industrial activity, with only a few projects moving forward. In early July of 2020, we did amend our General Fund budget when we started to understand the impacts it would have on our budgeted revenues, especially in building permits. As part of that action, we did adjust our budget numbers down to $600,000, a reduction of approximately $400,000 from what we had budgeted at the beginning of the year.

In 2021, we continue to expect that we will see steady activity in single-family residential building permits, but that our Commercial/Industrial activity will continue to be slow. Given this, we are recommending a budget of $700,000 for permits in 2021, which would be a relatively average year as we look back over the past 20 years of history. Staff feels that this is more reflective of what we will actually see, and plans to keep our budgeted building permits at this level going into the future so that we can avoid revenue shortfalls if larger projects do not move forward.

Under our current building projections, our staffing levels will be enough to cover the anticipated workload and be able to turn around building permits in a timely fashion.

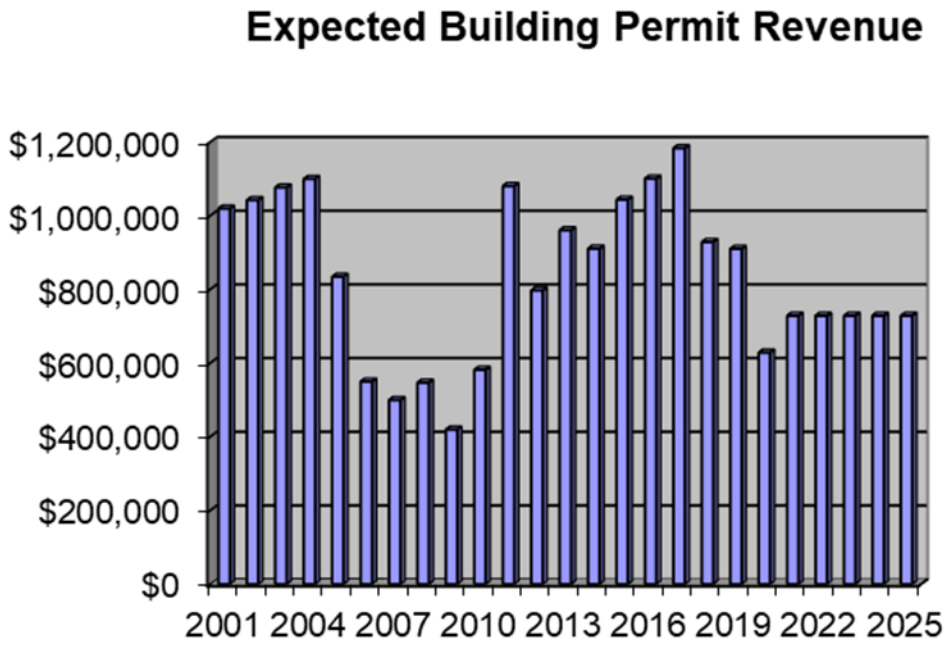

Electric Fund Transfers

The City has a formal policy of charging ourselves a per kilowatt-hour Payment in Lieu of Taxes (PILOT), which is roughly equivalent to 10% of the total electric rate of our electric utility. For 2021 the PILOT is anticipated to generate revenues to the general fund of approximately $4.1 million. We have seen an a dramatic increase in this portion of our revenue over the past several years, which has represented both an increase in usage by our existing customers, but also reflects the positive impacts we are seeing through the addition of large economic development projects such as increasing usage of our Data Centers, additional commercial uses in town, and the recent expansions we have seen with existing business in our original Industrial Parks on the north end of the community. We continue to expect that to increase in 2021 as we expect to see some continued expansion of load in our data centers, as well as seeing existing industrial customers add on, and residential growth continue.

It should be noted that in that total Electric PILOT above, that we do program just under $50,000 of that to come from Minnesota Valley Electric Cooperative and Xcel for their PILOT fee in 2021, with development of the first building at the Southwest corner of the intersection of 212 and Engler Boulevard now completed, and the addition of franchise fee from MN Valley Electric Coop Services in the Chevelle neighborhood. This PILOT fee to the other providers in Chaska is something that we would plan to fully implement in 2021 to make sure that as we see new development in our community, that users in other provider's territories are seeing a PILOT fee as if they were in Chaska Electric's territory.

There is a significant amount of development that will occur in the future in MVEC's territory, with most of the job growth in the Southwest Chaska Master Plan falling within their territory. Because of this, we expect this number to increase significantly as we move into the future and we see this development occur. It should be noted that as opposed to the 10% PILOT fee that we have charged by policy to our own Electric Utility, the PILOT fee that will be charged to MVEC and Xcel will be based on 5% of their gross revenues for the year. This is because of the limitations State Statute allows us to charge from an outside utility, and because this percentage matches up with the percentage that is charged to Centerpointe Energy for our enacted Gas Franchise Fee. Statute requires that these fees to external business be equitable from one utility to the next. The total PILOT Fee revenue between Chaska, Xcel and MVEC represents around 21% of the General Fund's total revenues.

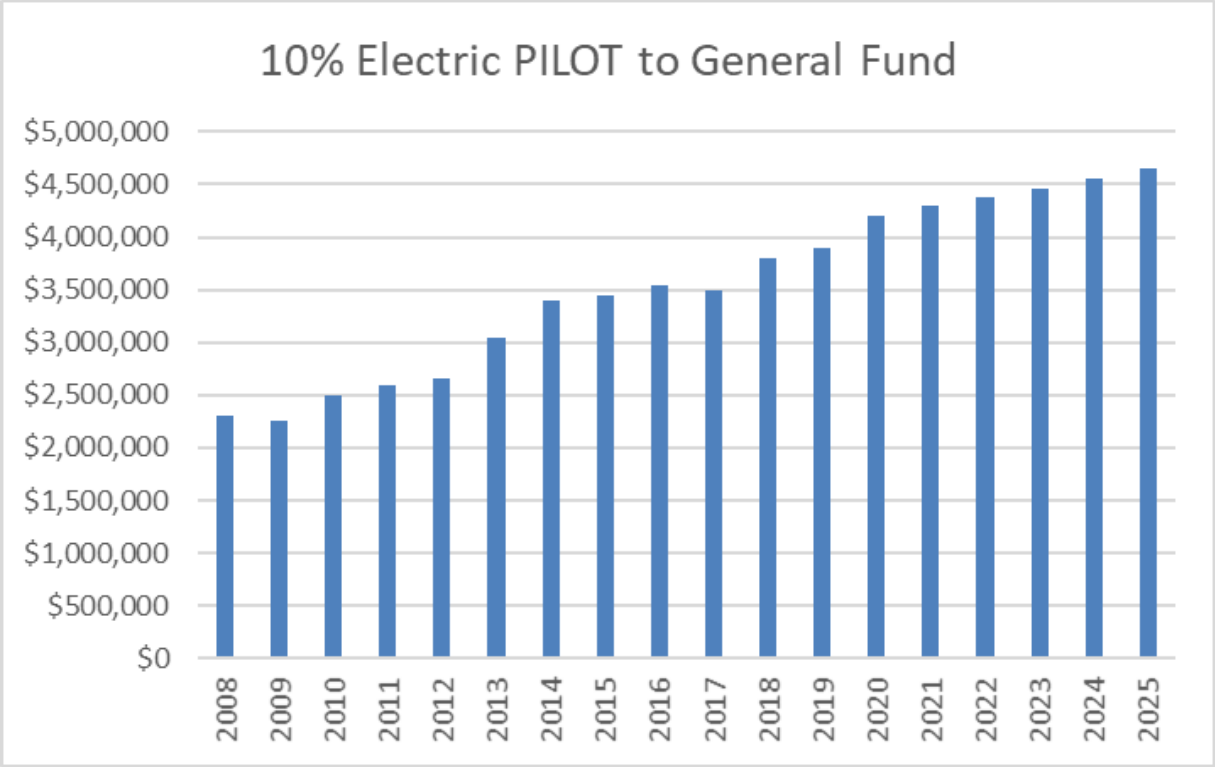

Charges for Services

Charges for services are those revenues that support City derived from charges to individual users for services, other governmental agencies, or inter-fund charges for administrative services. These would include payroll, finance, administration, and Human Resources costs to our Enterprise Funds (i.e. Electric, Sewer, Water, CCC, etc…). For 2021, charges for services are programmed to be $3,900,370 as compared to $3,673,078 in 2020, or an increase of $227,292. This increase in charges for services is occurring to help us keep up with the actual cost of service the General Fund is providing to our other Enterprise Funds. This includes all our Administrative Services, Human Resources and Administration. In 2020, we also added a contribution from the Enterprise Funds to the overall Building Maintenance Division Budget, which started at $125,000 in 2020. This amount would be planned to stay at $125,000 for 2021 as we are planning to delay the second phase of our Staffing Study implementation (of which the building maintenance was included) until 2022. For 2021, most of the $227,292 increase is for the $200,000 that is being contributed from our Utility Funds to the General Fund to support our efforts to increase our General Fund Reserves. Combining this with the additional $100,000 tax levy component will allow us to budget for an increase in our General Fund Reserve in 2021 of $300,000.

***General Fund Expenditures*:**

General fund operating expenditures are forecast to be $20,107,676 which is an increase of 6.94%% over the revised 2020 Operating Budget. It should be noted that the 2020 budget numbers shown here are the revised expenditures after we amended the budget in early July to account for COVID-related changes. The original expenditure budget for the General Fund in 2020 was $19,009,708. Based on that original budget, the increase in expenditures for the 2021 budget is 5.78%.

In preparing the 2021 budget the following general assumptions were used for the operating budget:

- *Utilize budgeting objectives developed*
- *Increase in the tax levy by 3.53% due to new growth and inflation, with an additional $300,000 (3%) levied to fully fund our CIP Program in 2021, $100,000 (1%) to support efforts to increase our General Fund Reserves, and $100,000 (1%) to address funding the finding of our Community Policing Study*
- *Delay implementation of the second year of our Staffing Gap Study until 2022*
- *Operational costs up 1% in 2021*
- *Personnel salaries up 1.5%, with employer benefit contribution seeing 0% increase in 2021.*
- *Assume continuation of our Street Reconstruction Program, with the 2021 project targeted to be Walnut Street from 4th Street to Highway 61, and the one block of*

5th Street between Highway 41 and Walnut Street (this will be in preparation for the 2022 reconstruction of Highways 41 and 61)

- *Replace the 6th Street bridge in Downtown Chaska utilizing bond funds received from the State of Minnesota in the Bonding Bill*
- *Continue contract with City of Carver for shared recreational services, bringing in additional $66,611 to support our recreational services (this is up from the $51,000 we used to generate with us now being able to look at actual usage of the contract by Carver residents.*
- *Continue with $12,000 expense in 2020 for "Scholarships" to support large community activities utilizing our new banquet facility ($1,000 per month)*
- *Fully fund the Equipment Replacement Schedule for 2021 (most of this occurred through the sale of Equipment Certificates in 2020)*
- *Assume we are building up our General Fund reserves*
- *All other items in budget to remain unchanged*

Department	2019 Actual	2020 Budget	2021 Budget	Increase	%Increase
Council	$166,212	$132,407	$145,078	$12,671	9.57%
Communication	$92,698	$99,747	$112,115	$12,368	12.40%
Administration	$1,007,887	$840,367	$866,591	$26,224	3.12%
Human Resources	$0	$268,201	$286,290	$18,089	6.74%
Elections	$10,063	$42,583	$5,402	-$37,181	-87.31%
Admin Serv-Finance	$1,679,051	$1,691,826	$1,666,915	-$24,911	-1.47%
Admin Serv-IS	$1,164,825	$1,287,435	$1,291,865	$4,430	0.34%
Legal	$117,798	$80,000	$80,400	$400	0.50%
Community Dev.	$934,980	$1,040,727	$991,220	-$49,507	-4.76%
Engineering	$416,046	$393,319	$480,685	$87,366	22.21%
City Hall Bldg	$218,583	$229,735	$239,710	$9,975	4.34%
Building Maint Div	$0	$261,142	$476,253	$215,111	82.37%
Police	$4,537,848	$4,660,754	$5,131,256	$470,502	10.09%
Fire	$1,916,724	$2,306,143	$2,123,571	-$182,572	-7.92%
Civil Defense	$4,880	$5,728	$5,756	$28	0.49%
Public Works Admin	$346,527	$364,719	$417,742	$53,023	14.54%
Streets	$1,582,319	$1,895,298	$1,880,342	-$14,956	-0.79%
Snow Removal	$324,127	$248,302	$247,430	-$872	-0.35%
MSB Building	$242,724	$232,202	$235,081	$2,879	1.24%
Park Maintenance	$1,164,298	$1,132,760	$1,218,315	$85,555	7.55%
ISD 112 Maint	$30,743	$36,183	$37,205	$1,022	2.82%
Tree Control	$27,564	$37,597	$40,720	$3,123	8.31%
Parks Admin	$511,710	$549,578	$541,424	-$8,154	-1.48%
Parks Youth	$161,916	$164,406	$182,178	$17,772	10.81%
Parks Adult	$99,296	$73,716	$97,619	$23,903	32.43%
Firemen's Park	$168,162	$17,034	$121,664	$104,630	614.24%
Parks Skating Rink	$9,406	$11,713	$11,670	-$43	-0.37%
Unallocated	-$1,510,782	$699,141	$1,173,179	$474,038	67.80%
Total	$ 15,425,605	$18,802,763	$20,107,676	$ 1,304,913	6.94%

From a CIP perspective, with the additional $300,000 in levy to meet the projected gaps in this budget, 2021 will be the fifth year we will be able to fully fund our Capital Improvement Program, with $1,000,000 now being dedicated to the plan. This allows us to be able to program the exact projects we will be undertaking on an annual basis to support our overall Capital Improvement Program. For 2021, the following projects are planned to be undertaken:

- Street Overlay: $475,000
- Trail Upgrades/Overlays: $60,000
- New Pedestrian Bridge on Main Trail to replace failing culverts: $60,000
- Fire Station Entry Sidewalk Replacement/ADA Issues: $50,000
- MSB Annual Door/Hoist/General: $45,000
- Sports Court Resurfacing at Chaska Town Course: $30,000
- Cortina Woods Park Rehab: $135,000
- Clover Hockey Rink Rehab: $70,000
- Lion's Park Shelter: $75,000 (partner project with the Chaska Lions)

Based on this, and the other changes that were listed above, the level of expenditures we are recommending to the budget would allow us to meet our budget and service objectives set for the 2021 budget process, while also keeping us very low from a tax perspective in the entire Twin Cities Metropolitan Area. With the uncertainty of the impact of the COVID impact in 2021, we will continue to keep a close eye on our budget during the year, like we did in 2020, and be prepared to come back with a budget amendment to balance the budget should some assumptions not materialize during the course of the year. We will continue to have to be nimble in this regard until the pandemic is over.

Specific Department 2021 Activities

Administration

For 2021, we do not have any new positions or programs budgeted, with the positions budgeted being the same as we saw in 2020. Two positions that were on the docket to be added as part of the Staffing Study is an additional HR Technician and an Economic Development Technician position. The HR Tech was scheduled to be added in the first year of the Study implementation in 2020 but was delayed when we amended the budget in early July and eliminated this budgeted position. The EDA Technician was scheduled for the 2021 budget. Both positions are planned to be added in 2022 if we can resume our Staffing Study implementation in that year.

Administrative Services

Budgeted staffing levels for the Administrative Services Department will remain steady in 2021. As part of the Staffing Study, it was identified that the IS portion of this department is short 1 Network Analyst position. With the delay in the Staffing Study, we have this position being implemented in fourth year of the Staffing Study implementation in 2024. It should also be noted that there is one vacant Administrative Support position in this Department that has been vacant since a retirement. We plan to keep this position vacant through 2021 and wait until 2022 to refill.

Community Development

As indicated previously, we do anticipate continuing to see a steady amount of residential building activity in the community in 2021, but expect that the Commercial/Industrial activity will continue to be slow during the upcoming year due to uncertainties in the market with COVID. Because of that, we did reduce our budgeted building permit revenue down by $300,000 to a total of $700,000 for the year. While we are seeing less activity in C/I, our Building Inspectors remain very busy with a number of people using this time to make improvements (decks, roofs, pools, additions, etc…) to their homes. Between our steady residential growth and these smaller but high quantity project, we do see the staffing level in our Building Inspector division to be sufficient for 2021.

The addition we see coming into the department is a second City Planner position, which was identified in the Staffing Study. This is something that is needed given the level of our planning activities in Chaska, but we do not have it coming on-line until 2022, as we would want to see the planning activity recover post-pandemic before we would hire this position.

In the Engineering Department, the Staffing Study does show the need for 1 additional position in the Engineering Department, which would be an Assistant Engineer position. We do not have that planned to come on-line until 2023. There are no planned additions in the Engineering Department for 2021.

Police

As we have discussed during the budget process this year, the Police Department did go through a thorough process this year to evaluate needs in the department based on Community feedback. The was a process that was initiated during much of the social unrest in the early part of the summer. While there was many long-term findings that we will work to incorporate into the department's practices and procedures, there were four items that were identified that Staff is recommending we address in the short term to make sure we are heading in the right direction. These include requiring 40 hours of Critical Incident Training for all of our Sworn officers in the department, reinstituting the VITALS Application in Chaska which provides critical information to officers about underlying conditions of an individual as they respond to a call which could influence the

outcome of the call, reinstituting membership in the Southwest Metro Drug Task Force next year, as we have seen a large increase in narcotics use in the community over the last year, and to add an additional Patrol Sergeant position, as we now find that only 55% of our shift are covered by a direct supervisor. With many young officers now part of our department, these supervisor relationships are critical for accountability, and to provide on-the-job training and mentorship opportunities. The addition of all these efforts would add $100,000 to the budget for 2021.

Fire Department

Currently, the Fire Department has an authorized staffing level of 44 paid-on-call staff, although because of retirements on the department, the actual staffing level is currently at 35 firefighters, with a full-time Fire Chief and Fire Marshal, along with two Fire Inspectors. We also have a support staff in the Fire Department to support Administrative functions. All 5 of these full-time staff are also Fire fighters, allowing them to respond to calls during the day, and reduce the burden on our Paid-on-Call Staff.

To preserve our volunteer base of firefighters for the long-term, the City added a Fire Chief position in 2013 both to provide continuity in leadership to our fire personnel, but to also be able to take on the growing administrative load of running a department such as this. It was the plan that making this move now would be a cost savings to the Fire Department over time, to avoid large staffing expenses in the future if we were unable to attract volunteers for these critical positions. This position was hired in February of 2013 and has been a very good addition to our Fire Department model. At the time that we created the Fire Chief position, we also moved the Fire Marshall position out of the Community Development Department and moved this position up into the Fire Department.

In addition to this, in 2015 we also did add Duty Crew shifts twice a week to both help take the burden off all fire fighters to respond to calls, and to pilot this program for future use. We have been able to add to this over the last four years, bringing the total number of evenings we have this staffed to Wednesday-Saturday evenings.

It should be noted that during the COVID 19 pandemic, we have been able to move to duty crews most every night of the week until 10 pm. With the majority of our calls being able to be responded to by a crew of 4, we have been able to avoid a significant number of "all calls" during this time period, which is an event where all available personnel are requested to respond. The reason we have done this is to avoid exposure issues within this Department. Early on in the pandemic, we were able to learn from issues that were encountered at a Fire Department in Kirkland, WA where they had to quarantine 25 of their personnel from one department because they were all exposed to COVID within the station. For that to occur in Chaska would effectively close our operations at the Fire Department and would require us to rely exclusively on mutual aid. There were a couple

of cities in our immediate vicinity that ran into this situation which required them to close their facility completely for a 14-day period. We have used the duty crews in the evening hours and our full time staff during the day time hours to accomplish this, with us being successful in eliminating a large number of "all call" situations which are very risky for COVID exposure issues. We have submitted these additional costs to FEMA for 2020 and hope to see these incremental costs be reimbursed. We plan to continue with this practice if we can during this pandemic period.

In the 2018 budget we made another significant change to the department by budgeting the addition of two new Rental Inspectors/Fire Fighters to the Department. The primary function of these employees is to help bolster our Rental Inspection program, as that area of services has been on the rise as more single-family homes were converted to rentals during our last economic downtown. As mentioned previously, an added benefit of these employees being in the Fire Department is that they add two additional fire fighters at the station during daytime hours to be able to respond to fire calls. Given that this is the most difficult time for the City to staff with Paid On-Call Fire Fighters, this will continue to help us maintain our volunteer-based department. This has been a great addition to this department and is continued to be included in the 2021 budget.

The Staffing Study did not identify a current gap in this department but did identify that when we are fully developed that we will likely need the equivalent of an additional 10 FTEs in the department. How we Staff these positions over time to most effectively and efficiently utilize our resources will still have to be determined, but it is something that we will have to plan for implementation over the next 20 years as we reach full development. It is likely that much of the information we have gathered through use of duty crews will help us in making a final decision on how to permanently staff this department when the community is fully developed.

Public Works

Chaska's Public Works activities are anticipated to increase as the community grows, with personnel needing to be added as mileage of road and the addition of parks occurs in the community. We will also have to plan for the addition of Staff to support our Storm Water activities. While these services are paid out of the Storm Water Fund, they are housed out of the Public Works Department, as we utilize our Staff for multiple functions.

The largest item identified as a need in the Staffing Study was the need for the City to dedicate more resources to our Building Maintenance Activities. This is especially true as our facilities have continued to age, and we have not always put the proper levels of resources necessary in the past to keep these buildings in good condition. As the Council is aware, the City did move in 2020 to centralize all its Building Maintenance Activities to one central Division, which we currently house in the Public Works Department. Ultimately, the Staffing study would show that this Division will have 6 dedicated full-time

Staff to address building maintenance, with the ability to centralize it in one area so that we are able to maintain all of our facilities in a similar manner, and take advantage of purchasing power by bringing service contracts under one area of the organization.

While we did need to put a hold on our Staffing Study implementation in 2020, and have delayed additional implementation steps in the 2021 budget, we were able to accomplish the hiring of a Building Maintenance Foreman, along with a Building Maintenance Lead and a Building Maintenance Worker in 2020. We were also able to fund the first $125,000 of a Building Maintenance Division budget in 2020, a budget that will grow to $500,000 annually by the time we have fully implemented our plan by 2024. While we are delaying the next phase of implementation in 2021, we were able to keep these three Building Maintenance positions in the 2021 budget along with the first $125,000 we set aside as a budget for this division. When we restart the implementation of the Staffing Study in 2022, we will work over the remaining 3 years to both fill the other 3 positions as well as add $125,000 per year to this division's operations budget to get it to the full amount of $500,000 annually.

Recreation

Although functionally, the Recreation Department, Community Center and new Curling/Event Center are in essence combined, Recreation Administration and Programming are budgeted as separate General Fund activities. Having them functionally work together does create efficiencies, which has kept our Park and Recreation expenditures significantly below the State average for communities our size. In 2021, we plan to continue to have our Park and Recreation Director, our Recreation Manager, our Recreation Coordinator, the Recreation/Special Events Coordinator and Athletics Supervisor all funded fully out of the General Fund, with a portion of other support positions allocated to the General Fund. The Staffing Study did not identify any gaps in our overall staffing levels for recreation, and Staffing levels will remain unchanged for 2021 and into the near future. It should be noted that the portion of the support position in the General Fund that became vacant through retirement will remain unfilled in 2021 in both the General Fund and Community Center budgets to help balance the budget for this upcoming year.

REQUEST FOR ACTION
CHASKA CITY COUNCIL
12/07/2020

Subject: **Issuance and Sale of Bonds: Series 2020F and Series 2021A**
Electric Utility Revenue Refunding Bonds, Series 2020F
G.O. State Aid Street Bonds, Series 2021A

Prepared By: Noel Graczyk, Administrative Services Director
Kelly Grinnell, Finance Manager

Overview

City staff recommends the City Council adopt two parameters resolutions to issue two series of bonds. Use of parameters resolutions will permit the City to issue bonds on a date when market conditions are most favorable to sell each series of bonds. City staff can then issue and sell bonds to an underwriter when it is in the best interest of the City to be in the market.

A parameters resolution sets a maximum amount for True Interest Costs (TIC), a maximum PAR (principal) amount, and a minimum Present Value Savings (PVS) for a refunding. After sale and issuance of a bond series is complete, a confirming resolution with final terms from the sale will be presented for adoption by the City Council. A confirming resolution must be approved by the City Council. The City has issued bonds using a parameters resolution many times, both early this year and in prior years.

Baker Tilly Municipal Advisors, LLC (BTMA), Municipal Advisor to the City, and City staff together have structured a current refunding to refund the remaining outstanding portion of Electric Utility Revenue Bonds, Series 2011D. Both Series 2011D and the proposed refunding Series 2020F are supported by pledged electric utility revenues and will not be supported by a General Obligation (G.O.) pledge.

The second structured series to be issued are G.O. State Aid Street Bonds, Series, 2021A. This new series will be used to provide long-term financing for the City's portion of the Interchange project. Proceeds from this series will be used to pay off the Line of Credit (LOC) the City has used over the past two years to finance State, County and City portions of the project. These bonds are supported by a G.O. pledge and future development revenues from the SW Chaska Area. The following are overviews of each proposed series.

$2,250,000 Electric Utility Revenue Refunding Bonds, Series 2020F

On Monday, November 16, 20202, the City Council adopted a resolution to sell Series 2020F bonds on Monday, December 7, 2020. In discussions with BTMA, it has been advised that the City move from a fixed date of sale to issuance using a parameters resolution. This change in when the sale date will be determined will allow the City to select a sale date when there is less competition in the market trying to sell bonds. It also provides potential underwriters additional

time to review the credit rating report after it is releasee by S&P Global Ratings (S&P). Series 2020F will be the first electric revenue series issued by the City to be rated by S&P.

This refunding series will refund the remaining outstanding portion of Electric Utility Revenue Bonds, Series 2011D and is structured as a current refunding. The amount of financing to be issued and the estimated present value savings estimated to be generated from the refunding are as follows.

Project	**Current Refunding**	**Issuance Costs**	**Less Other Sources**	**PAR Bonding**	**Estimated Present value Savings**
Current Refunding of Series 2011D	$2,182,514	$311,785	($244,299) Debt Service Reserve from Series 2011D	$2,250,000	$186,401 7.6%

<u>$5,195,000 General Obligation State Aid Street Bonds, Series 2021A</u>

This series will provide long-term permanent financing for construction of the interchange at State-Hwy 212 and County-Road 44. Proceeds from sale of this series will be used to repay the outstanding City portion of the LOC. The LOC will expire as of the end of February 2021. Total estimated City costs for the project are about $5.2 Million including interest charges incurred during the term of the LOC. The structure of this bond does not finance any State or County portions of the project. This series of bonds will be sold in 2020 but closing on the sale will not occur until January 2021 making this a Series 2021 bond. The amount of financing to be issued is as follows.

Project	**Project Funding**	**Issuance Costs**	**Less Other Sources**	**PAR Bonding**
Series 2021A, Permanent funding for interchange LOC	$5,206,366	$115,999	($127,365) Reoffering premium	$5,195,000

<u>G.O. Pledge</u>

The City is not pledging taxing authority to repay debt service on the Series 2020F but is pledging electric utility revenues. This is consistent with the revenue pledge that was made when Series 2011D was originally issued.

Issuance of Series 2021A will be issued as G.O. bonds and will include a G.O. pledge of taxing authority to repay debt service. Proposed tax levies to support repayment of the bond are

consistent with anticipated MSA revenues and other fees related to development in the SW Chaska area.

BTMA Summary Report
Attached from BTMA are summary reports that include detailed debt schedules for both Series 2020F and Series 2021A.

Recommendation
Staff recommends adoption of each of the two proposed parameters resolutions for issuance and sale of Series 2020F and Series 2021A.

CITY COUNCIL ACTION REQUESTED

(Note: Each motion should be adopted as a separate action.)

Motion to adopt Resolution No. 2020-94 authorizing issuance and establishing pricing committee to award sale for Electric Utility Revenue Refunding Bonds, Series 2020F

Motion to adopt Resolution No. 2020-95 authorizing issuance and establishing pricing committee to award sale for General Obligation Sate Aid Street Bonds, Series 2021A.

CERTIFICATION OF MINUTES RELATING TO
ELECTRIC UTILITY REVENUE REFUNDING BONDS, SERIES 2020F

Issuer: City of Chaska, Minnesota

Governing body: City Council

Kind, date, time and place of meeting: A regular meeting held on December 7, 2020 at 7:00 P.M. at the City Hall.

Members present:

Members absent:

Documents attached: Minutes of said meeting (including):

RESOLUTION NO. 2020-94

RESOLUTION RELATING TO ELECTRIC UTILITY REVENUE REFUNDING BONDS, SERIES 2020F; AUTHORIZING THE ISSUANCE, ESTABLISHING PRICING COMMITTEE TO AWARD SALE, FIXING THE FORM AND DETAILS, PROVIDING FOR THE EXECUTION AND DELIVERY THEREOF AND SECURITY THEREFOR

I, the undersigned, being the duly qualified and acting recording officer of the public corporation issuing the obligations referred to in the title of this certificate, certify that the documents attached hereto, as described above, have been carefully compared with the original records of the corporation in my legal custody, from which they have been transcribed; that the documents are a correct and complete transcript of the minutes of a meeting of the governing body of the corporation, and correct and complete copies of all resolutions and other actions taken and of all documents approved by the governing body at the meeting, insofar as they relate to the obligations; and that the meeting was duly held by the governing body at the time and place and was attended throughout by the members indicated above, pursuant to call and notice given as required by law.

WITNESS my hand officially as such recording officer on December _7_, 2020.

_____
City Clerk

Member _____ introduced the following resolution and moved its adoption, which motion was seconded by Member _____:

RESOLUTION RELATING TO ELECTRIC UTILITY REVENUE REFUNDING BONDS, SERIES 2020F; AUTHORIZING THE ISSUANCE, ESTABLISHING PRICING COMMITTEE TO AWARD SALE, FIXING THE FORM AND DETAILS, PROVIDING FOR THE EXECUTION AND DELIVERY THEREOF AND SECURITY THEREFOR

WHEREAS, under the provisions of Minnesota Statutes, Chapter 453, as amended (the "Act"), a municipal power agency is authorized to issue bonds to carry out any corporate purpose, including, but not limited to the acquisition or construction of any project to be owned by the municipal power agency and the refunding of the principal of, or interest on, any bonds previously issued by municipal power agency;

WHEREAS, Section 453.58 of the Act authorizes any city, by resolution of its governing body, to exercise any of the powers granted under the Act to municipal power agencies, as provided therein;

WHEREAS, this City Council (the "Council") of the City of Chaska, Minnesota (the "City"), on November 29, 1999, adopted a resolution electing to exercise the powers of a municipal power agency under the Act, and the City is thereby authorized to exercise the powers of a municipal power agency under the Act in respect of the City's electric utility system (the "Electric Utility"), as it now exists and as it may be expanded or improved from time to time, and other matters;

WHEREAS, to finance and refinance the costs of a gas turbine electric generating facility in the City which are not a part of the Electric Utility (the "Generating Facilities"), the City has heretofore issued its $34,580,000 Electric Revenue Bonds (Generating Facilities), Series 2000A (the "Series 2000A Bonds"), its $30,735,000 Electric Revenue Refunding Bonds (Generating Facilities), Series 2005A (the "Series 2005A Bonds"), and its $21,760,000 Electric Revenue Refunding Bonds (Generating Facilities), Series 2015A (the "Series 2015A Bonds," and the Series 2000A Bonds, Series 2005A Bonds and Series 2015A Bonds, collectively, the "Generating Facilities Bonds");

WHEREAS, for payment of the Generating Facilities Bonds, the City pledged, pursuant to Article Five of the Indenture of Trust for the Series 2015A Bonds (the "Series 2015A Indenture"), the "Net Revenues of the Generating Facilities," which are equivalent to the "Gross Revenues of the Generating Facilities" net of certain operating and maintenance expenses. Gross Revenues of the Generating Facilities, as defined in the Series 2015A Indenture, means all revenues, income, rents and receipts derived by the City from or attributable to the ownership and/or operation of the Generating Facilities:

a. including all revenues attributable to the electric generation of the Generating Facilities resulting from the payment of the costs thereof received by the City under any contract for the sale of power, energy, transmission or other service from the Generating Facilities or any part thereof or any contractual arrangement with respect to the use of the Generating Facilities, or any

portion thereof or the services, output or capacity thereof, including amounts received by the City under the Amended and Restated Peaking Power Sales Agreement dated as of October 1, 2015, between the City and the Minnesota Municipal Power Agency, as such may be amended or supplemented from time to time (the "Agency Contract"), and certain other amounts as described in the Series 2015A Indenture),

b. but *not* including the user fees, charges or other proceeds received by the City in connection with or attributable to the operation by the City of its Electric Utility, whether or not such electric utility revenues are in any way related to the Generating Facilities, *except* amounts for the use or capacity of the Generating Facilities that the City may be required to pay from its electric utility system, as an operating expense thereof, as a result of the Net Revenues of the Generating Facilities being insufficient to maintain the debt service coverage ratio to be established under the Series 2015A Indenture if the Agency Contract is deemed invalid.

WHEREAS, to finance the costs of improvements to the Electric Utility, including but not limited to the acquisition and installation of an electric utility substation at West Creek and improvements to the existing Minnesota River and Bluff Creek substations (collectively, the "Project"), the City issued its $3,535,000 Electric Utility Revenue Bonds, Series 2011D, dated as of December 22, 2011 (the "Series 2011D Bonds");

WHEREAS, for payment of the Series 2011D Bonds, there being no outstanding obligations payable from or constituting a lien or charge thereon at the time of issuance of the Series 2011D Bonds, the City pledged all the receipts from rates, fees, charges and rentals established by the City for the availability, benefit and use of the Electric Utility *other than the Gross Revenues of the Generating Facilities*, including availability and benefit to the City, and all sums derived from any penalties and interest thereon, and from any sales of property constituting a part of the Electric Utility, and from the investment and reinvestment of gross revenues of the same, net of certain operating and maintenance expenses (the "Net Revenues of the Electric Utility" or, as used herein, the "Pledged Revenues").

WHEREAS, the City subsequently issued its $7,220,000 Electric Utility Revenue Bonds, Series 2017A, dated as of September 6, 2017 (the "Series 2017A Bonds"), pursuant to the Act and Minnesota Statutes, Chapter 475, to finance improvements to the Electric Utility, which 2017A Bonds are secured by the Pledged Revenues on a parity with the Series 2011D Bonds;

WHEREAS, this Council hereby finds that it is necessary and in the best interests of the City and its residents that the City issue its Electric Utility Revenue Refunding Bonds, Series 2020F (the "Bonds," and together with the Series 2017A Bonds and any additional bonds issued pursuant to Section 6 of this Resolution, the "Parity Obligations"), pursuant to the Act and Minnesota Statutes, Chapter 475 to refinance the Project;

WHEREAS, the proceeds of the Bonds, along with a transfer of prior issue debt service reserve funds, will be used to (i) refund the October 1, 2021 through October 1, 2031 maturities

of the Series 2011D Bonds (the "Refunded Bonds"); (ii) fund a deposit to the Reserve Account for the Bonds; and (iii) pay the costs associated with the issuance of the Bonds; and

WHEREAS, the Bonds shall be payable solely from the Pledged Revenues, and this Council reasonably anticipates that the Pledged Revenues will be adequate to pay the principal of and interest on the Bonds when due.

NOW, THEREFORE, BE IT RESOLVED by the City Council of the City of Chaska, Minnesota, as follows:

SECTION 1. AUTHORIZATION, SALE AND SECURITY FOR THE BONDS

1.01 Authorization. This Council hereby establishes a pricing committee (the "Pricing Committee," as further described below), which Pricing Committee shall meet on December 16, 2020 or such other date as the Pricing Committee shall approve, up to and including December 31, 2020, for the purpose of considering proposals for and awarding the sale of the Bonds based on the Terms of Proposal previously prepared by Baker Tilly Municipal Advisors, LLC ("Baker Tilly") and attached to the Authorizing Resolution adopted by this Council on November 16, 2020, and the following parameters:

- The total principal amount of the Bonds shall not exceed $2,500,000;
- The net present value savings shall not be less than 3.00% of the refunded debt service.

1.02 Sale. The City has retained Baker Tilly as independent municipal advisor in connection with the sale of the Bonds. Pursuant to Minnesota Statutes, Section 475.60, Subdivision 2, paragraph (9), the requirements as to public sale do not apply to the issuance of the Bonds. The Mayor (or Councilmember designated by the Mayor) and the City Administrator (the "Pricing Committee") are hereby authorized and directed to agree with a purchaser of the Bonds (the "Purchaser") upon the exact purchase price, principal amount, maturities, redemption provisions and interest rate or rates for the Bonds, within the parameters set forth in Section 1.01. The Mayor and City Administrator are hereby authorized to execute a contract on behalf of the City for the sale of the Bonds and such execution shall be conclusive evidence of such agreement and shall be binding upon the City. In the absence or unavailability of any member of the Pricing Committee, the acting Mayor or City Administrator may act in place of such member, and a purchase contract may be signed by such acting Mayor or City Administrator

1.03 Officials Authorized to Execute Documents. The Mayor and City Administrator are hereby authorized and directed to execute and deliver any purchase contract and the documents required thereunder, the Official Statement, the Bonds and any other documents required to complete the financing contemplated hereby. Execution and delivery of such documents by the Mayor and City Administrator shall constitute evidence that such items are consistent with the terms of this resolution and have been duly authorized, executed and delivered by the City and are enforceable against the City in accordance with their terms, subject to customary exceptions relating to bankruptcy, reorganization, insolvency and other laws affecting creditors' rights. The Mayor and City Administrator are further authorized to take such other actions as may be required to effectuate the terms and intent of this resolution. In the event

of the absence or disability of the Mayor and City Administrator, the acting Mayor and City Administrator are hereby authorized to act in the place and stead of the Mayor and City Administrator, and to take all actions and execute all documents approved hereby.

1.04 Security for the Bonds. The Bonds and the interest coming due thereon shall be payable solely from the Pledged Revenues; however, the Bonds shall not constitute a lien on the physical property comprising the Electric Utility. The Bonds shall not constitute a general obligation of the City, and the full faith and credit and taxing powers of the City are not pledged for the payment of the Bonds and interest thereon, and no person shall ever have the right to compel the application of City moneys (other than the Pledged Revenues), or the levy of ad valorem taxes, for the payment of such principal and interest.

SECTION 2. BOND TERMS, EXECUTION AND DELIVERY

2.01 Maturities, Interest Rates, Denominations and Payment. The City shall forthwith issue and deliver the Bonds, which shall be dated originally as of December 29, 2020, be in fully registered form, in the denomination of $5,000 each or any integral multiple thereof of a single maturity, shall mature on the dates and shall bear interest from their date of issue until paid or duly called for redemption at the rate(s) set forth in the purchase contract or final Official Statement.

The Bonds shall be issuable only in fully registered form. The interest thereon and, upon surrender of each Bond, the principal amount thereof shall be payable by check or draft issued by the Registrar (as defined herein); provided that, so long as the Bonds are registered in the name of a securities depository, or a nominee thereof, in accordance with Section 2.07, principal and interest shall be payable in accordance with the operational arrangements of the securities depository.

2.02 Dates and Interest Payment Dates. Upon initial delivery of the Bonds pursuant to Section 2.06 and upon any subsequent transfer or exchange pursuant to Section 2.05, the date of authentication shall be noted on each Bond so delivered, exchanged or transferred. Interest on the Bonds shall be payable on April 1 and October 1 in each year, commencing October 1, 2021, each such date being referred to herein as an Interest Payment Date, to the persons in whose names the Bonds are registered on the Bond Register (as defined herein) at the Registrar's close of business on the fifteenth day of the calendar month next preceding such Interest Payment Date, whether or not such day is a business day. Interest shall be computed on the basis of a 360-day year composed of twelve 30-day months.

2.03 Redemption. The Bonds will not be subject to optional redemption in advance of their respective stated maturity dates.

The Bonds shall be subject to any mandatory redemption provisions set forth in the purchase agreement, final Official Statement and forms thereof.

The City Administrator shall cause notice of the call for redemption thereof to be published if and as required by law, and at least thirty (30) and not more than sixty (60) days prior to the designated redemption date, shall cause notice of call for redemption to be mailed, by first class mail, to the Registrar and registered holders of any Bonds to be redeemed at their

addresses as they appear on the Bond Register described in Section 2.05 hereof, provided that notice shall be given to any securities depository in accordance with its operational arrangements. No defect in or failure to give such notice of redemption shall affect the validity of proceedings for the redemption of any Bond not affected by such defect or failure. Official notice of redemption having been given as aforesaid, the Bonds or portions of Bonds so to be redeemed shall, on the redemption date, become due and payable at the redemption price therein specified and from and after such date (unless the City shall default in the payment of the redemption price) such Bonds or portions of Bonds shall cease to bear interest. Upon partial redemption of any Bond, a new Bond or Bonds will be delivered to the owner without charge, representing the remaining principal amount outstanding.

2.04 Appointment of Registrar. The City hereby appoints U.S. Bank, National Association, in St. Paul, Minnesota, as the initial bond registrar, transfer agent and paying agent (the "Registrar"). The City reserves the right to remove the Registrar, effective upon not less than thirty days' written notice and upon the appointment and acceptance of a successor Registrar, in which event the predecessor Registrar shall deliver all cash and Bonds in its possession to the successor Registrar and shall deliver the Bond Register to the successor Registrar.

2.05 Registration The effect of registration and the rights and duties of the City and the Registrar with respect thereto shall be as follows:

(a) Register. The Registrar shall keep at its principal corporate trust office a register (the "Bond Register") in which the Registrar shall provide for the registration of ownership of Bonds and the registration of transfers and exchanges of Bonds entitled to be registered, transferred or exchanged. The term Holder or Bondholder as used herein shall mean the person (whether a natural person, corporation, association, partnership, trust, governmental unit, or other legal entity) in whose name a Bond is registered in the Bond Register.

(b) Transfer of Bonds. Upon surrender for transfer of any Bond duly endorsed by the Holder thereof or accompanied by a written instrument of transfer, in form satisfactory to the Registrar, duly executed by the Holder thereof or by an attorney duly authorized by the Holder in writing, the Registrar shall authenticate and deliver, in the name of the designated transferee or transferees, one or more new Bonds of a like aggregate principal amount and maturity, as requested by the transferor. The Registrar may, however, close the books for registration of any transfer after the fifteenth day of the month preceding each interest payment date and until such interest payment date.

(c) Exchange of Bonds. At the option of the Holder of any Bond in a denomination greater than $5,000, such Bond may be exchanged for other Bonds of authorized denominations, of the same maturity and a like aggregate principal amount, upon surrender of the Bond to be exchanged at the office of the Registrar. Whenever any Bond is so surrendered for exchange, the Registrar shall authenticate and deliver one or more new Bonds of a like aggregate principal amount and maturity, as requested by the registered owner or the owner's attorney in writing.

(d) Cancellation. All Bonds surrendered for payment, transfer or exchange shall be promptly canceled by the Registrar and thereafter disposed of. The Registrar shall furnish the City at least once each year a certificate setting forth the principal amounts and numbers of Bonds canceled and destroyed.

(e) Improper or Unauthorized Transfer. When any Bond is presented to the Registrar for transfer, the Registrar may refuse to transfer the same until it is satisfied that the endorsement on such Bond or separate instrument of transfer is valid and genuine and that the requested transfer is legally authorized. The Registrar shall incur no liability for the refusal, in good faith, to make transfers which it, in its judgment, deems improper or unauthorized.

(f) Persons Deemed Owners. The City and the Registrar may treat the person in whose name any Bond is at any time registered in the Bond Register as the absolute owner of the Bond, whether the Bond shall be overdue or not, for the purpose of receiving payment of or on account of, the principal of and interest on the Bond and for all other purposes; and all payments made to or upon the order of such Holder shall be valid and effectual to satisfy and discharge the liability upon such Bond to the extent of the sum or sums so paid.

(g) Taxes, Fees and Charges. For every transfer or exchange of Bonds (except for an exchange upon a partial redemption of a Bond), the Registrar may impose a charge upon the owner thereof sufficient to reimburse the Registrar for any tax, fee or other governmental charge required to be paid with respect to such transfer or exchange.

(h) Mutilated, Lost, Stolen or Destroyed Bonds. In case any Bond shall become mutilated or be destroyed, stolen or lost, the Registrar shall deliver a new Bond of like amount, number, maturity date and tenor in exchange and substitution for and upon cancellation of any such mutilated Bond or in lieu of and in substitution for any Bond destroyed, stolen or lost, upon the payment of the reasonable expenses and charges of the Registrar in connection therewith; and, in the case of a Bond destroyed, stolen or lost, upon filing with the Registrar of evidence satisfactory to it that the Bond was destroyed, stolen or lost, and of the ownership thereof, and upon furnishing to the Registrar of an appropriate bond or indemnity in form, substance and amount satisfactory to it, in which both the City and the Registrar shall be named as obligees. All Bonds so surrendered to the Registrar shall be canceled by it and evidence of such cancellation shall be given to the City. If the mutilated, destroyed, stolen or lost Bond has already matured or been called for redemption in accordance with its terms it shall not be necessary to issue a new Bond prior to payment.

(i) Authenticating Agent. The Registrar is hereby designated authenticating agent for the Bonds, within the meaning of Minnesota Statutes, Section 475.55, Subdivision 1, as amended.

(j) Valid Obligations. All Bonds issued upon any transfer or exchange of Bonds shall be the valid obligations of the City, evidencing the same debt, and entitled to the same benefits under this resolution as the Bonds surrendered upon such transfer or exchange.

2.06 Execution, Authentication and Delivery. The Bonds shall be prepared under the direction of the City Administrator and shall be executed on behalf of the City by the signatures of the Mayor and the City Administrator, provided that the signatures may be printed, engraved or lithographed facsimiles of the originals. In case any officer whose signature or a facsimile of whose signature shall appear on any Bond shall cease to be such officer before the delivery of such Bond, such signature or facsimile shall nevertheless be valid and sufficient for all purposes, the same as if such officer had remained in office until the date of delivery of such Bond. Notwithstanding such execution, no Bond shall be valid or obligatory for any purpose or entitled to any security or benefit under this resolution unless and until a certificate of authentication on the Bond has been executed by the manual signature of an authorized representative of the Registrar. Certificates of authentication on different Bonds need not be signed by the same representative. The executed certificate of authentication on any Bond shall be conclusive evidence that it has been duly authenticated and delivered under this resolution. When the Bonds have been prepared, executed and authenticated, the City Administrator shall deliver them to the Purchaser upon payment of the purchase price in accordance with the contract of sale heretofore executed, and the Purchaser shall not be obligated to see to the application of the purchase price.

2.07 Securities Depository. For purposes of this section the following terms shall have the following meanings:

"Beneficial Owner" shall mean, whenever used with respect to a Bond, the person in whose name such Bond is recorded as the beneficial owner of such Bond by a Participant on the records of such Participant, or such person's subrogee.

"Cede & Co." shall mean Cede & Co., the nominee of DTC, and any successor nominee of DTC with respect to the Bonds.

"DTC" shall mean The Depository Trust Company of New York, New York.

"Participant" shall mean any broker-dealer, bank or other financial institution for which DTC holds Bonds as securities depository.

"Representation Letter" shall mean the Representation Letter pursuant to which the City agrees to comply with DTC's Operational Arrangements.

(a) The Bonds shall be initially issued as separately authenticated fully registered bonds, and one Bond shall be issued in the principal amount of each stated maturity of the Bonds. Upon initial issuance, the ownership of such Bonds shall be registered in the bond register in the name of Cede & Co., as nominee of DTC. The Registrar and the City may treat DTC (or its nominee) as the sole and exclusive owner of the Bonds registered in its name for the purposes of payment of the principal of or interest on the Bonds, selecting the Bonds or portions thereof to be redeemed, if any, giving any notice permitted or required to be given to registered owners of Bonds under this resolution, registering the transfer of Bonds, and for all other purposes whatsoever; and neither the Registrar nor the City shall be affected by any notice to the contrary. Neither the Registrar nor the City shall have any responsibility or obligation to any Participant, any person claiming a beneficial ownership interest in the Bonds under or through DTC or any Participant, or any other person which is not shown on the bond register as being a

registered owner of any Bonds, with respect to the accuracy of any records maintained by DTC or any Participant, with respect to the payment by DTC or any Participant of any amount with respect to the principal of or interest on the Bonds, with respect to any notice which is permitted or required to be given to owners of Bonds under this resolution, with respect to the selection by DTC or any Participant of any person to receive payment in the event of a partial redemption of the Bonds, or with respect to any consent given or other action taken by DTC as registered owner of the Bonds. So long as any Bond is registered in the name of Cede & Co., as nominee of DTC, the Registrar shall pay all principal of and interest on such Bond, and shall give all notices with respect to such Bond, only to Cede & Co. in accordance with DTC's Operational Arrangements, and all such payments shall be valid and effective to fully satisfy and discharge the City's obligations with respect to the principal of and interest on the Bonds to the extent of the sum or sums so paid. No person other than DTC shall receive an authenticated Bond for each separate stated maturity evidencing the obligation of the City to make payments of principal and interest. Upon delivery by DTC to the Registrar of written notice to the effect that DTC has determined to substitute a new nominee in place of Cede & Co., the Bonds will be transferable to such new nominee in accordance with paragraph (e) hereof.

(b) In the event the City determines that it is in the best interest of the Beneficial Owners that they be able to obtain Bonds in the form of bond certificates, the City may notify DTC and the Registrar, whereupon DTC shall notify the Participants of the availability through DTC of Bonds in the form of certificates. In such event, the Bonds will be transferable in accordance with paragraph (e) hereof. DTC may determine to discontinue providing its services with respect to the Bonds at any time by giving notice to the City and the Registrar and discharging its responsibilities with respect thereto under applicable law. In such event the Bonds will be transferable in accordance with paragraph (e) hereof.

(c) The execution and delivery of the Representation Letter to DTC, if not previously filed with DTC, by the Mayor or City Administrator is hereby authorized and directed.

(d) In the event that any transfer or exchange of Bonds is permitted under paragraph (b) or (c) hereof, such transfer or exchange shall be accomplished upon receipt by the Registrar of the Bonds to be transferred or exchanged and appropriate instruments of transfer to the permitted transferee in accordance with the provisions of this resolution. In the event Bonds in the form of certificates are issued to owners other than Cede & Co., its successor as nominee for DTC as owner of all the Bonds, or another securities depository as owner of all the Bonds, the provisions of this resolution shall also apply to all matters relating thereto, including, without limitation, the printing of such Bonds in the form of bond certificates and the method of payment of principal of and interest on such Bonds in the form of bond certificates. The Bonds shall be issuable only in fully registered form. The interest thereon and, upon surrender of each Bond, the principal amount thereof, shall be payable by check or draft issued by the Registrar; provided that, so long as the Bonds are registered in the name of a securities depository, or a nominee thereof, principal and interest shall be payable in accordance with the operational arrangements of the securities depository.

SECTION 3. FORM OF BONDS The Bonds shall be prepared in substantially the form found at EXHIBIT A attached hereto, with appropriate variations, omissions and insertions as indicated by this resolution.

SECTION 4. SECURITY PROVISIONS

4.01 Definitions. In addition to the terms defined herein in context, for purposes of this resolution, Bonds shall mean the Bonds and any additional bonds which may be issued on a parity therewith pursuant to Sections 6.02 or 6.03 hereof, and "Operating Expenses" shall mean the current expenses, paid or accrued, of operation, maintenance and repair of the Electric Utility, as determined in accordance with generally accepted accounting principles, including but not limited to franchise fees, administrative expenses, premiums for insurance, fuel and electric energy purchased and materials, supplies and labor needed for current operation, maintenance and repair, and charges for the accumulation of appropriate reserves for current expenses which do not recur monthly but may reasonably be expected to be incurred; but not including allowances for depreciation, interest, renewals or replacements of capital assets, transfers to other funds, or any portion of the salary or wages of any officer of employee not representing reasonable compensation for the performance of the duties necessary to the operation of the Electric Utility.

4.02 Bond Proceeds and Revenues Pledged and Appropriated. For the convenient and proper administration of the moneys now and hereafter to be borrowed by issuance of Bonds, and to make adequate and specific security to the purchasers and holders from time to time of the Bonds, the City shall at all times during which the Bonds are outstanding, continue to maintain on its official books and records an Electric Fund (the "Electric Fund") (also known as the Electric Operating Fund (#601), which account is maintained separate and apart from the City's Turbine Fund (#607) relating to the Generation Facilities) which shall be administered for the purposes and in the manner prescribed herein. All proceeds of the Bonds and all other funds hereafter received or appropriated for purposes of the Electric Utility, excluding the Gross Revenues of the Generating Facilities and any other funds received relating to the Generation Facilities, are appropriated to this Electric Fund (the "Gross Revenues of the Electric Utility").

Within the Electric Fund the City shall establish and maintain the separate subfunds or accounts designated and described in Sections 4.03 to 4.07, to segregate income received and expenses paid and accrued for the respective purposes described in those sections. The Gross Revenues of the Electric Utility received in the Electric Fund shall be apportioned to said accounts on each March 15, June 15, September 15, and December 15, commencing on March 15, 2021 (the "Quarterly Apportionment").

On the date of issuance of the Bonds, the City shall allocate:

(1) A portion of the proceeds of the Bonds and amounts remaining in the Debt Service Reserve Fund for the Series 2011D Bonds to the Refunding Account established herein for the redemption of the Refunded Bonds;

(2) A portion of the proceeds of the Bonds to the Construction Account for the payment of costs of issuance of the Bonds; and

(3) A portion of the proceeds of the Bonds to the Series 2020F Debt Service Reserve Account.

4.03 Construction Account. To the Construction Account shall be credited proceeds of the Bonds in the amount provided in Section 4.02 hereof. The moneys on hand from time to time in the Construction Account shall be used only to pay as incurred and allowed costs which under generally accepted accounting principles are recognized capital costs of repairs, improvements, betterments or extensions of the Electric Utility or are costs of issuance of Bonds. All moneys remaining in the Construction Account, if any, after payment of the costs of issuance of the Bonds, shall be transferred to the Debt Service Account established by Section 4.05.

4.04 Operation and Maintenance Account. On each Quarterly Apportionment there shall first be set aside and credited to the Operation and Maintenance Account, as a first charge on the Gross Revenues of the Electric Utility, such amount as may be required over and above the balance then held in the account to pay the reasonable and necessary Operating Expenses of the Electric Utility which are then due and payable, or are to be paid prior to the next Quarterly Apportionment, and to maintain a reasonable operating reserve within the Operation and Maintenance Account. Moneys in the Operation and Maintenance Account shall be used solely for the payment of Operating Expenses of the Electric Utility. The amounts remaining after provision has been made for the Operation and Maintenance Account as provided in this section are defined as the Pledged Revenues.

4.05 Debt Service Account. To the Debt Service Account shall be credited proceeds of the Bonds in the amount provided in Section 4.02 hereof. Thereafter, upon each Quarterly Apportionment there shall be set aside and credited to the Debt Service Account, out of the Pledged Revenues, an amount equal to one-sixth of the interest to become due on the next succeeding interest payment date, plus one-twelfth of the principal to become due on the next two succeeding interest payment dates, on all outstanding Parity Obligations; provided that the initial Quarterly Apportionments with respect to the Bonds shall be in such amounts as are sufficient to accumulate the sums necessary to make the initial interest and initial principal payment on the Bonds on October 1, 2021. Moneys from time to time held in the Debt Service Account shall be disbursed only to meet payments of principal and interest on the Parity Obligations as such payments become due. If any payment of principal or interest becomes due when moneys in the Debt Service Account are temporarily insufficient therefor, such payment shall be advanced out of any Bond proceeds or Pledged Revenues theretofore segregated and then on hand in the Series 2020F Debt Service Reserve Account or the Surplus Account described in Section 4.07. The amounts remaining after provision has been made for the Debt Service Account as provided in this Section are defined as the "Surplus Pledged Revenues" of the Electric Utility.

4.06 Series 2020F Debt Service Reserve Account. So long as any Bonds remain outstanding, there shall be established and maintained in the Series 2020F Debt Service Reserve Account a balance not less than the Debt Service Reserve Requirement. The "Debt Service Reserve Requirement" for the Bonds means the lesser of (i) 10% of the stated principal amount of the outstanding Bonds (or, if less, 10% of the issue price of the Bonds net of any pre-issuance accrued interest), (ii) the maximum amount of principal and interest to become due in any future bond year on the Bonds or (iii) 125% of the average annual principal and interest to become due in any future bond year on the Bonds. Forthwith upon delivery of the Bonds, there shall be

deposited in the Series 2020F Debt Service Reserve Account a sum which is equal to the Debt Service Reserve Requirement effective upon issuance of the Bonds, as further described in Section 4.02 hereof. Moneys on hand in the Series 2020F Debt Service Reserve Account shall be used only to pay maturing principal and interest on the Bonds when moneys in the Debt Service Account are insufficient therefor, provided that moneys on hand in the Series 2020F Debt Service Reserve Account may be applied by the City to the payment or discharge of the Bonds at any time when all outstanding Bonds are to be discharged or paid and the total of moneys on hand in the Series 2020F Debt Service Reserve Account and the Debt Service Account (or the allocable portion thereof in the case of the payment or discharge of a series of Bonds) plus any other moneys irrevocably appropriated by the City for the purpose are sufficient to pay or discharge all outstanding Bonds. If the balance on hand in the Series 2020F Debt Service Reserve Account is ever reduced below the Debt Service Reserve Requirement, such deficiency shall be restored out of amounts then on hand in the Surplus Account, or if the Surplus Account is not sufficient therefor, out of the next Surplus Pledged Revenues received.

4.07 Surplus Account. On each Quarterly Apportionment, all Surplus Pledged Revenues not needed to restore a deficiency in any of the foregoing accounts shall be credited to the Surplus Account, provided that if additional bonds shall at any time be issued on a parity with the outstanding Parity Obligations payable from said Surplus Pledged Revenues, in accordance with Section 6.04 hereof, Surplus Pledged Revenues may be pledged to a separate account for the payment of such additional bonds and interest thereon prior to being deposited into the Surplus Account. Moneys from time to time on hand in the Surplus Account which are not required to meet the current requirements of the foregoing accounts or to be held as a reserve for replacement and depreciation of the Electric Utility, may be used to discharge Bonds in accordance with Section 8, or may be used for any other lawful purpose.

4.08 Refunding Account. There shall be established in the Electric Fund, for the purpose of refunding the Refunded Bonds, a Refunding Account into which there shall be paid the proceeds from the sale of the Bonds in the amount provided in Section 4.02 hereof. Monies in the Refunding Account will be used to redeem the Refunded Bonds on February 1, 2021.

4.09 Deposit and Investment of Funds. All revenues and proceeds appropriated to the Electric Fund shall be kept on deposit with one or more depository banks duly qualified under the laws of the State, with the security therein required, except that such revenues and funds may be invested and reinvested in securities which are authorized by Chapter 118A, Minnesota Statutes, or any successor chapter or section. All securities purchased shall mature at or before the time when it is estimated that the proceeds thereof will be needed for the purposes of the account from which funds are withdrawn for the purchase. All income, gain or loss on such investments, shall be credited or charged, as the case may be, to the account from which the investment was made.

SECTION 5. ADDITIONAL COVENANTS

5.01 General Covenant. The City covenants and agrees with the holders of the Bonds that until such obligations and interest thereon are fully paid or discharged as provided in this resolution, the City will fully and promptly perform and do all acts and things provided in this Section.

5.02 Rate Covenant. The City will establish and maintain reasonable charges, fees and rentals for all service and benefits of whatsoever nature furnished and made available by the Electric Utility to all individuals, firms, corporations and governmental subdivisions and agencies, including the City itself, in accordance with schedules such that the Gross Revenues of the Electric Utility derived therefrom will at all times be sufficient to meet all payments due from and to maintain the reserve required in the Electric Fund and the several accounts therein as provided in Section 4, and will revise such rates, charges and rentals whenever necessary for these purposes, and sufficient in any event, except and unless prohibited by law, to produce in each fiscal year Pledged Revenues not less than 120% of the amount of principal and interest payable from the Debt Service Account in said fiscal year.

5.03 Continued Ownership. The City will continue its ownership and operation of the Electric Utility, until all Bonds have been fully paid or discharged as provided by Section 8, and will cause it to be maintained in good and efficient operating condition, free from all liens on the revenues or the physical properties thereof, other than the liens herein provided, and will not sell or otherwise dispose of any capital assets of the Electric Utility except as provided herein. The City may at any time sell or otherwise dispose of any part of the Electric Utility, in the reasonable judgment of the City Council, which is obsolete, inadequate, worn out, or no longer necessary or desirable for continued operation of the Electric Utility, provided that any amounts received upon such sale or other disposition of such properties shall be deposited in the Debt Service Account or applied toward payment of the cost of procuring other capital assets useful in operation of the Electric Utility. The City may also at any time discontinue its operation of the Electric Utility and thereupon sell or otherwise dispose of any part or all of the assets thereof provided that all of the following conditions are satisfied:

(a) The City Council shall have adopted a resolution determining that it is in the best interest of the City that the City shall discontinue its operation of the Electric Utility.

(b) The City Council shall have entered into a contract for the sale or other disposition of part or all of the Electric Utility on terms such that the City is entitled to receive amounts at all times sufficient to pay when due the interest to accrue on all outstanding Bonds to their maturity dates or earlier designated redemption dates and to pay when due the entire principal amount of all outstanding Bonds at maturity or upon prior redemption.

(c) The City Council shall have adopted resolutions irrevocably pledging to payment of the outstanding Bonds, and interest thereon, the amounts to be received by the City under paragraph (b).

(d) The City shall have received: (i) from nationally recognized bond counsel a written opinion stating that the result of the pledge made in accordance with paragraph (c) will not result in the interest payable on the Bonds thereafter being includable in gross income for Federal income tax purposes, and (ii) from a nationally recognized rating agency a written statement that under the circumstances the investment quality of the Bonds has not been impaired by the sale or other disposition of the Electric Utility.

5.04 Books and Records. The City will cause proper and adequate books of record and account to be maintained, reflecting all receipts and disbursements and all accrued claims and

expenses in connection with the operation, maintenance and improvement of the Electric Utility and the payment of obligations incurred therefor, and will make such records available for inspection at all reasonable times by the holder of any Bond or the holder's agent or attorney, and will cause them to be audited annually by a qualified independent certified public accountant, and will furnish the report of each such audit without cost to the initial purchaser of each series of Bonds and will make the report available, upon request, to the holder of any Bond upon payment of reasonable photocopying and mailing fees.

5.05 Insurance. The City will procure and keep in force at all times insurance on all buildings, structures, improvements, machinery and equipment constituting at any time a part of the Electric Utility, exclusive of foundations and excavations, against the perils covered under "extended coverage" or "all risk" insurance approved by the Insurance Department of the State, in such amounts as like properties are customarily insured for by prudent owners thereof, and will maintain public liability insurance at all times in amounts not less than the amounts in excess of which the City is immune from tort liability under the laws of the State, for all acts and omissions of its officers and employees concerned with the operation and maintenance of the Electric Utility, and will procure and keep in force surety company bonds covering all officers and employees handling Electric Utility funds, in amounts sufficient to cover at all times the funds in their hands. In the event of loss or damage compensated by any such insurance or bonds, the proceeds thereof shall be used to repair and restore the damage compensated.

5.06 Bondholders' Rights. The holders of not less than 25% in aggregate principal amount of the Bonds which are at such time outstanding may, either at law or in equity, by suit, action or other proceedings, protect and enforce the rights of all holders of the Bonds and compel the performance of any and all of the covenants required herein to be performed by the City and its officers and agents, including but not limited to the establishment and maintenance of charges, fees and rentals and the collection and proper segregation of revenues and the use thereof. The holders of a majority in principal amount of all outstanding Bonds shall have the right to direct the time, method and place of conducting any proceeding for any remedy available to such holders or the exercise of any power conferred upon them, and the right to waive a default in the performance of any such covenant, and its consequences, except a default in the payment of the principal of or interest on any Bond when due. However, nothing herein shall impair the absolute and unconditional right of the holder of each Bond to receive payment of the principal thereof and interest thereon as such principal and interest respectively become due, from the Pledged Revenues pledged and appropriated for the payment thereof, and to institute suit for the enforcement of any such payment.

5.07 Limitation; Bonds not Debt. The Bonds shall not constitute in any manner indebtedness, bonds or certificates of indebtedness of the City within the meaning of any provision of State law limiting the amount or method of incurring such indebtedness, and shall be payable solely from the Pledged Revenues which are pledged and appropriated for that purpose in this resolution, and the taxing powers of the City are not pledged in any manner for the payment thereof, except as may be needed for the payment of reasonable charges for electric utility service and benefits rendered and available to the City.

5.08 Competing Service. To the extent permitted by law, the City will not grant a franchise for, establish or authorize the establishment of any other system for the public supply

of service or services in competition with any or all of the services supplied by the Electric Utility.

SECTION 6. PRIORITIES AND ADDITIONAL BONDS

6.01 Priority of Bond Payments. Except as otherwise expressly provided herein, each and all of the outstanding Parity Obligations (including any future additional bonds) shall be equally and ratably secured by and payable out of the Pledged Revenues without preference or priority of any one Bond over any other by reason of date of issue or maturity, serial number or otherwise; provided that if at any time the Pledged Revenues on hand in the Electric Fund as defined in Section 4 hereof are insufficient to pay principal and interest then due on all outstanding Parity Obligations, any and all moneys then on hand shall be first used to pay the interest accrued on all such outstanding Parity Obligations, and the balance shall be applied toward payment of the maturing principal of such outstanding Parity Obligations in order of their maturities, the earliest maturing of such obligations to be paid first, and pro rata in payment of such obligations maturing on the same date.

6.02 Refunding Bonds. The City reserves the right to issue one or more series of additional bonds to refund any or all of the outstanding Parity Obligations. Any additional bonds issued under this Section 6.02 for refunding purposes may be made payable from the Pledged Revenues on a parity as to principal and interest with all then outstanding Parity Obligations, provided that (1) the maturity of each refunding revenue bond shall be subsequent to the last maturity of any then outstanding Parity Obligations which are not refunded or otherwise discharged in accordance with Section 8 hereof, and (2) no bondholder shall be required to accept a refunding revenue bond in exchange for any Parity Obligation owned by the bondholder. Additional bonds for refunding purposes issued under this Section 6.02 are exempt from the requirements of Section 6.03.

6.03 Other Parity Bonds. The City reserves the right to issue additional bonds, including refunding bonds not issued pursuant to Section 7.02, over and above the amount, if any, issued pursuant to Section 6.02, payable from the Debt Service Account, on a parity as to both principal and interest with the outstanding Parity Obligations, if the annual Pledged Revenues for each of the last two complete fiscal years preceding the issuance of such additional bonds have equaled at least 120% of the average annual principal and interest payable from said Debt Service Account in any subsequent fiscal year during the term of the outstanding obligations payable therefrom, on all such outstanding Parity Obligations (other than any obligations to be refunded by the additional bonds) and on the additional bonds proposed to be issued. For the purpose of the foregoing computation, the Pledged Revenues for the two fiscal years preceding the issuance of additional bonds shall be the Pledged Revenues as defined in Section 4.04 and as shown by the official books and records of the City; provided, however, that for the purposes of this Section, the preceding two years' Pledged Revenues may be adjusted to reflect the following:

(1) estimates of additional gross revenues to be derived from the addition of any large Electric Utility customers since the beginning of the preceding two fiscal years;

(2) estimates of additional gross revenues to be derived from rate increases placed in effect since the beginning of the preceding two fiscal years;

(3) estimates of additional gross revenues to be derived from firm agreements for the sale of significant amounts of excess power, which have been entered into since the beginning of the two preceding fiscal years; or

(4) estimated savings on operating costs, electric demand charges or base power costs which would have been realized if the proposed improvement had been in existence throughout the full two preceding fiscal years.

If any adjustments are made to historic Pledged Revenues for the purposes of this Section as provided above, any estimate shall be made in writing by professional engineers or independent certified public accountants experienced in utility design, operation and financing, and not in the regular employ of the City except as they are employed in a consulting capacity ("Utility Consultants"). In no event shall any additional bonds be issued if the City is then in default in any payment of principal or interest on any outstanding Bonds, or if there then exists any deficiency in the balances required by this Resolution to be maintained in any of the accounts of the Electric Fund. As an alternative to the foregoing test for issuing additional bonds, additional bonds may also be issued upon receipt of a report of a Utility Consultant concluding that the forecasted Pledged Revenues:

(1) in the case of additional bonds to finance capital improvements which have not yet been acquired or constructed, for each of the two complete Fiscal Years next succeeding the date such capital improvements are expected to be placed in service, or,

(2) in the case of additional bonds not financing capital improvements, for each of the two complete Fiscal Years next succeeding the date on which the additional bonds are issued,

will not be less than 120% of the average amount of principal and interest payable from the Debt Service Account in any future fiscal year during the term of the then outstanding Parity Obligations (other than any Bonds to be refunded by the additional bonds) and on the additional bonds proposed to be issued, as shown by forecasted financial statements for each such period; any Utility Consultants' report delivered pursuant hereto must be accompanied by such forecasted financial statements and by a statement of the relevant assumptions upon which such forecasted statements are based.

Any additional bonds issued under this Section 6.03 shall have a debt service reserve account for that series of additional bonds as described in Section 4.06.

6.04 Subordinate Lien Bonds. Notwithstanding the above provisions of this Section 6, nothing contained in this resolution or in the Bonds shall be construed to preclude the City from issuing additional bonds other than those described in Sections 6.02 and 6.03 when necessary for the enlargement, improvement or extension of the Electric Utility; provided such additional bonds, whether constituting a general obligation of the City or payable solely from revenues of the Electric Utility, are expressly made a charge on and are payable only from the Surplus Pledged Revenues, and are not superior to or on a parity with the Parity Obligations.

SECTION 7. AMENDMENTS

7.01 Amendments Without Bondholder Consent. The City reserves the right to amend this resolution from time to time and at any time, for the purpose of curing any ambiguity or of curing, correcting or supplementing any defective provision contained herein, or of making such provision with regard to matters or questions arising hereunder as the City Council may deem necessary or desirable and not inconsistent with this resolution, and which shall not adversely affect the interests of the holders of Bonds issued hereunder, or for the purpose of adding to the covenants and agreements herein contained, or to the Pledged Revenues, other covenants and agreements thereafter to be observed and additional Gross Revenues of the Electric Utility thereafter appropriated to the Electric Fund, for the purpose of surrendering any right or power herein reserved to or conferred upon the City. Any such amendment may be adopted by resolution, without the consent of the holders of any of the Bonds. A new resolution authorizing the issuance of additional bonds in the manner and subject to the terms and conditions prescribed in Section 6 shall not require bondholder consent.

7.02 Amendments With Bondholder Consent. With the consent of the holders of Bonds as provided in Section 7.03, the City may from time to time and at any time amend this resolution by adding any provisions hereto or changing in any manner or eliminating any of the provisions hereof, or of any amending resolution, except that no amendment shall be adopted at any time without the consent of the holders of all Bonds then outstanding, if it would extend the maturities of any such Bonds, would reduce the rate or extend the time of payment of interest thereon, would reduce the amount or extend the time of payment of the principal thereof, would give to any obligation payable from the Debt Service Account any privileges over any other Parity Obligation, would reduce the sources of Gross Revenues of the Electric Utility appropriated to the Electric Fund, would authorize the creation of a pledge of said Gross Revenues of the Electric Utility prior to or on a parity with the Bonds (except as is authorized by Section 6), or would reduce the percentage in principal amount of Bonds required to authorize or consent to any such amendment.

7.03 Notice and Consent. Any amendment adopted pursuant to Section 7.02 shall be made by resolution duly adopted and shall become effective only upon the filing of written consents with the City Administrator, signed by the holders of not less than a majority in principal amount of the obligations payable from the Debt Service Account then outstanding or, in the case of an amendment not affecting all outstanding obligations payable therefrom, by the holders of not less than a majority in aggregate principal amount of the obligations affected by such amendment. Any written consent to an amendment may be embodied in and evidenced by one or any number of concurrent written instruments of substantially similar tenor signed by bondholders in person or by agent duly appointed in writing, and shall become effective when delivered to the City Administrator. Any consent by the holder of any Bond shall bind the holder and every future holder of the same Bond with respect to any amendment adopted by the City pursuant to such consent.

7.04 Proof. Proof of the execution of any consent, or of a writing appointing any agent to execute the same, or of the ownership by any person of Bonds, shall be sufficient for any purpose of this resolution and shall be conclusive in favor of the City if made in the manner provided in this Section 7.04. The fact and date of the execution by any person of any such consent or appointment may be proved by the affidavit of a witness of such execution or by the

certificate of any notary public or other officer authorized by law to take acknowledgments of deeds, certifying that the person signing it acknowledged the execution thereof. The amount of Bonds held by any person by or for whom a consent is given, and the distinguishing numbers of such Bonds, and the date of the holder's holding the same, shall be proved by the bond register. The fact and date of execution of any such consent and the amount and distinguishing numbers of Bonds held by the person executing the same may also be proved in any other manner which the City may deem sufficient; but the City may nevertheless, in its discretion, require further proof in cases where it deems further proof desirable.

SECTION 8. DEFEASANCE

When all of the Bonds have been discharged as provided in this Section 8, all pledges, covenants and other rights granted by this resolution to the holders of the Bonds shall cease. The City may discharge its obligations with respect to any Bonds which are due on any date by irrevocably depositing with the Registrar on or before that date a sum sufficient for the payment thereof in full; or, if any Bond should not be paid when due, it may nevertheless be discharged by depositing with the Registrar a sum sufficient for the payment thereof in full with interest accrued to the date of such deposit. The City may also at any time discharge its obligations with respect to any Bonds, subject to the provisions of law now or hereafter authorizing and regulating such action, by depositing irrevocably in escrow, with a bank qualified by law as an escrow agent for this purpose, cash or securities which are general obligations of the United States or securities of United States agencies which are authorized by law to be so deposited, bearing interest payable at such time and at such rates and maturing on such dates as shall be required, without reinvestment, to pay all principal and interest to become due thereon to maturity or earlier designated redemption date.

SECTION 9. TAX COVENANTS, CONTINUING DISCLOSURE AND OTHER

9.01 County Auditor Registration. The City Clerk is hereby authorized and directed to file a certified copy of this resolution with the County Auditor of Carver County, together with such other information as the County Auditor shall require, and to obtain from the County Auditor a certificate that the Bonds have been entered on the bond register as required by law.

9.02 Certification of Proceedings. The officers of the City and the County Auditor are hereby authorized and directed to prepare and furnish to the Purchaser and to Dorsey & Whitney LLP, bond counsel, certified copies of all proceedings and records of the City, and such other affidavits, certificates and information as may be required to show the facts relating to the legality and marketability of the Bonds as the same appear from the books and records under their custody and control or as otherwise known to them, and all such certified copies, certificates and affidavits, including any heretofore furnished, shall be deemed representations of the City as to the facts recited therein.

9.03 General Tax Covenant. The City covenants and agrees with the holders from time to time of the Bonds that it will not take or permit to be taken by any of its officers, employees or agents any action which would cause the interest on the Bonds to become includable in gross income under the Internal Revenue Code of 1986, as amended (the "Code"), and applicable Treasury Regulations (the "Regulations"), and covenants to take any and all actions within its powers to ensure that the interest on the Bonds will not become includable in gross income under

the Code and the Regulations. Specifically, the City covenants that so long as any Bonds are outstanding, it will continue to own and operate the Electric Utility as a public utility available on a substantially equal basis to all members of the general public. The City will not enter into any lease, management agreement, capacity agreement, output contract or other agreement which would cause the Bonds to be considered "private activity bonds" or "private loan bonds" pursuant to Section 141 of the Code.

9.04 Certification. The Mayor and City Administrator being the officers of the City charged with responsibility for issuing the Bonds pursuant to this resolution, are authorized and directed to execute and deliver to the Purchaser a certificate in accordance with the provisions of Section 148 of the Code and applicable Regulations, stating the facts, estimates and circumstances in existence on the date of issue and delivery of the Bonds which make it reasonable to expect that the proceeds of the Bonds will not be used in a manner that would cause the Bonds to be "arbitrage bonds" within the meaning of the Code and Regulations.

9.05 Arbitrage Rebate. The City acknowledges that the Bonds are subject to the rebate requirements of Section 148(f) of the Code. The City covenants and agrees to retain such records, make such determinations, file such reports and documents and pay such amounts at such times as are required under Section 148(f) and applicable Regulations to preserve the exclusion of interest on the Bonds from gross income for federal income tax purposes, unless the Bonds qualify for an exemption from the rebate requirements pursuant to one of the spending exceptions set forth in Section 1.148-7 of the Regulations and no "gross proceeds" of the Bonds (other than amounts constituting a "bona fide debt service fund") arise during or after the expenditure of the original proceeds thereof.

9.06 Qualified Tax Exempt Obligations. The Bonds shall be deemed designated as "qualified tax-exempt obligations" as provided in Section 265(b)(3)(D) of the Code, so long as:

(i) the Refunded Bonds, when issued, were designated by the City as qualified tax-exempt obligations under Section 265(b) of the Code;

(ii) the aggregate face amount of the issue of which the Bonds are a part does not exceed $10,000,000;

(iii) the weighted average maturity of the Bonds does not exceed the remaining weighted average maturity of the Refunded Bonds; and

(iv) no Bond has a maturity date which is later than thirty (30) years after the date of issuance of any bonds refunded by the Refunded Bonds which were designated as qualified tax-exempt obligations.

9.07 Official Statement. The Preliminary Official Statement relating to the Bonds, prepared and distributed by the Municipal Advisor, is hereby approved. The Municipal Advisor is hereby authorized on behalf of the City to prepare and distribute to the Purchaser within seven business days from the date hereof, a Final Official Statement listing the offering price, the interest rates, selling compensation, delivery date, the underwriters and such other information relating to the Bonds required to be included in the Official Statement by Rule l5c2-12 adopted by the Securities and Exchange Commission under the Securities Exchange Act of 1934. The

officers of the City are hereby authorized and directed to execute such certificates as may be appropriate concerning the accuracy, completeness and sufficiency of the Official Statement.

9.08 Continuing Disclosure. (a) Purpose and Beneficiaries. To provide for the public availability of certain information relating to the Bonds and the security therefor and to permit the Purchaser and other participating underwriters in the primary offering of the Bonds to comply with amendments to Rule 15c2-12 promulgated by the SEC under the Securities Exchange Act of 1934 (17 C.F.R. § 240.15c2-12), relating to continuing disclosure (as in effect and interpreted from time to time, the Rule), which will enhance the marketability of the Bonds, the City hereby makes the following covenants and agreements for the benefit of the Owners (as hereinafter defined) from time to time of the outstanding Bonds. The City is the only obligated person in respect of the Bonds within the meaning of the Rule for purposes of identifying the entities in respect of which continuing disclosure must be made. The City has complied in all material respects with any undertaking previously entered into by it under the Rule. If the City fails to comply with any provisions of this section, any person aggrieved thereby, including the Owners of any outstanding Bonds, may take whatever action at law or in equity may appear necessary or appropriate to enforce performance and observance of any agreement or covenant contained in this section, including an action for a writ of mandamus or specific performance. Direct, indirect, consequential and punitive damages shall not be recoverable for any default hereunder to the extent permitted by law. Notwithstanding anything to the contrary contained herein, in no event shall a default under this section constitute a default under the Bonds or under any other provision of this resolution. As used in this section, Owner or Bondowner means, in respect of a Bond, the registered owner or owners thereof appearing in the bond register maintained by the Registrar or any Beneficial Owner (as hereinafter defined) thereof, if such Beneficial Owner provides to the Registrar evidence of such beneficial ownership in form and substance reasonably satisfactory to the Registrar. As used herein, Beneficial Owner means, in respect of a Bond, any person or entity which (a) has the power, directly or indirectly, to vote or consent with respect to, or to dispose of ownership of, such Bond (including persons or entities holding Bonds through nominees, depositories or other intermediaries), or (b) is treated as the owner of the Bond for federal income tax purposes.

(b) Information To Be Disclosed. The City will provide, in the manner set forth in subsection (c) hereof, either directly or indirectly through an agent designated by the City, the following information at the following times:

(1) on or before twelve (12) months after the end of each fiscal year of the City, commencing with the fiscal year ending December 31, 2020, the following financial information and operating data in respect of the City (the "Disclosure Information"):

(A) the audited financial statements of the City for such fiscal year, prepared in accordance with generally accepted accounting principles in accordance with the governmental accounting standards promulgated by the Governmental Accounting Standards Board or as otherwise provided under Minnesota law, as in effect from time to time, or, if and to the extent such financial statements have not been prepared in accordance with such generally accepted accounting principles for reasons beyond the reasonable control of the City, noting the discrepancies therefrom and the

effect thereof, and certified as to accuracy and completeness in all material respects by the fiscal officer of the City; and

(B) to the extent not included in the financial statements referred to in paragraph (A) hereof, the information for such fiscal year or for the period most recently available of the type contained in the Official Statement under headings: The Electric Utility, Electric Utility Financial Statements, Revenue Debt, and Debt Coverage Based on 2019 Revenues.

Notwithstanding the foregoing paragraph, if the audited financial statements are not available by the date specified, the City shall provide on or before such date unaudited financial statements in the format required for the audited financial statements as part of the Disclosure Information and, within 10 days after the receipt thereof, the City shall provide the audited financial statements. Any or all of the Disclosure Information may be incorporated by reference, if it is updated as required hereby, from other documents, including official statements, which have been filed with the SEC or have been made available to the public on the Internet Web site of the Municipal Securities Rulemaking Board ("MSRB"). The City shall clearly identify in the Disclosure Information each document so incorporated by reference. If any part of the Disclosure Information can no longer be generated because the operations of the City have materially changed or been discontinued, such Disclosure Information need no longer be provided if the City includes in the Disclosure Information a statement to such effect, provided, however, if such operations have been replaced by other City operations in respect of which data is not included in the Disclosure Information and the City determines that certain specified data regarding such replacement operations would be described in paragraph (2) hereof, then, from and after such determination, the Disclosure Information shall include such additional specified data regarding the replacement operations. If the Disclosure Information is changed or this section is amended as permitted by this paragraph (b)(1) or subsection (d), then the City shall include in the next Disclosure Information to be delivered hereunder, to the extent necessary, an explanation of the reasons for the amendment and the effect of any change in the type of financial information or operating data provided.

(2) In a timely manner not in excess of ten business days after the occurrence of the event, notice of the occurrence of any of the following events:

(A) Principal and interest payment delinquencies;
(B) Non-payment related defaults, if material;
(C) Unscheduled draws on debt service reserves reflecting financial difficulties;
(D) Unscheduled draws on credit enhancements reflecting financial difficulties;
(E) Substitution of credit or liquidity providers, or their failure to perform;
(F) Adverse tax opinions, the issuance by the Internal Revenue Service of proposed or final determinations of taxability, Notices of Proposed Issue (IRS Form 5701-TEB) or other material notices or determinations with respect to the tax status of the Bonds, or other material events affecting the tax status of the Bonds;
(G) Modifications to rights of Bond holders, if material;
(H) Bond calls, if material, and tender offers;

(I) Defeasances;

(J) Release, substitution, or sale of property securing repayment of the Bonds, if material;

(K) Rating changes;

(L) Bankruptcy, insolvency, receivership or a similar event with respect to the City;

(M) The consummation of a merger, consolidation, or acquisition involving an obligated person or the sale of all or substantially all of the assets of the obligated person, other than in the ordinary course of business, the entry into a definitive agreement to undertake such an action or the termination of a definitive agreement relating to any such actions, other than pursuant to its terms, if material;

(N) Appointment of a successor or additional trustee or the change of name of a trustee, if material;

(O) Incurrence of a financial obligation of the obligated person, if material, or agreement to covenants, events of default, remedies, priority rights, or other similar terms of a financial obligation of the obligated person, any of which affect security holders, if material; and

(P) Default, event of acceleration, termination event, modification of terms, or other similar events under the terms of a financial obligation of the obligated person, any of which reflect financial difficulties.

For purposes of the events identified in paragraphs (O) and (P) above, the term "financial obligation" means (i) a debt obligation; (ii) a derivative instrument entered into in connection with, or pledged as security or a source of payment for, an existing or planned debt obligation; or (iii) a guarantee of (i) or (ii). The term "financial obligation" shall not include municipal securities as to which a final official statement has been provided to the MSRB consistent with the Rule.

As used herein, for those events that must be reported if material, an event is "material" if it is an event as to which a substantial likelihood exists that a reasonably prudent investor would attach importance thereto in deciding to buy, hold or sell a Bond or, if not disclosed, would significantly alter the total information otherwise available to an investor from the Official Statement, information disclosed hereunder or information generally available to the public. Notwithstanding the foregoing sentence, a material fact is also an event that would be deemed material for purposes of the purchase, holding or sale of a Bond within the meaning of applicable federal securities laws, as interpreted at the time of discovery of the occurrence of the event.

For the purposes of the event identified in (L) hereinabove, the event is considered to occur when any of the following occur: the appointment of a receiver, fiscal agent or similar officer for an obligated person in a proceeding under the U.S. Bankruptcy Code or in any other proceeding under state or federal law in which a court or governmental authority has assumed jurisdiction over substantially all of the assets or business of the obligated person, or if such jurisdiction has been assumed by leaving the existing governmental body and officials or officers in possession but subject to the supervision and orders of a court or governmental authority, or the entry of an order confirming a plan of reorganization, arrangement or liquidation by a court or governmental authority having supervision or jurisdiction over substantially all of the assets or business of the obligated person.

(3) In a timely manner, notice of the occurrence of any of the following events or conditions:

(A) the failure of the City to provide the Disclosure Information required under paragraph (b)(1) at the time specified thereunder;
(B) the amendment or supplementing of this section pursuant to subsection (d), together with a copy of such amendment or supplement and any explanation provided by the City under subsection (d)(2);
(C) the termination of the obligations of the City under this section pursuant to subsection (d);
(D) any change in the accounting principles pursuant to which the financial statements constituting a portion of the Disclosure Information are prepared; and
(E) any change in the fiscal year of the City.

(c) Manner of Disclosure.

(1) The City agrees to make available to the MSRB, in an electronic format as prescribed by the MSRB from time to time, the information described in subsection (b).

(2) All documents provided to the MSRB pursuant to this subsection (c) shall be accompanied by identifying information as prescribed by the MSRB from time to time.

(d) Term; Amendments; Interpretation.

(1) The covenants of the City in this section shall remain in effect so long as any Bonds are outstanding. Notwithstanding the preceding sentence, however, the obligations of the City under this section shall terminate and be without further effect as of any date on which the City delivers to the Registrar an opinion of bond counsel to the effect that, because of legislative action or final judicial or administrative actions or proceedings, the failure of the City to comply with the requirements of this section will not cause participating underwriters in the primary offering of the Bonds to be in violation of the Rule or other applicable requirements of the Securities Exchange Act of 1934, as amended, or any statutes or laws successory thereto or amendatory thereof.

(2) This section (and the form and requirements of the Disclosure Information) may be amended or supplemented by the City from time to time, without notice to (except as provided in paragraph (c)(3) hereof) or the consent of the Owners of any Bonds, by a resolution of this Council filed in the office of the recording officer of the City accompanied by an opinion of bond counsel, who may rely on certificates of the City and others and the opinion may be subject to customary qualifications, to the effect that: (i) such amendment or supplement (a) is made in connection with a change in circumstances that arises from a change in law or regulation or a change in the identity, nature or status of the City or the type of operations conducted by the City, or (b) is required by, or better complies with,

the provisions of paragraph (b)(5) of the Rule; (ii) this section as so amended or supplemented would have complied with the requirements of paragraph (b)(5) of the Rule at the time of the primary offering of the Bonds, giving effect to any change in circumstances applicable under clause (i)(a) and assuming that the Rule as in effect and interpreted at the time of the amendment or supplement was in effect at the time of the primary offering; and (iii) such amendment or supplement does not materially impair the interests of the Bondowners under the Rule.

If the Disclosure Information is so amended, the City agrees to provide, contemporaneously with the effectiveness of such amendment, an explanation of the reasons for the amendment and the effect, if any, of the change in the type of financial information or operating data being provided hereunder.

(3) This section is entered into to comply with the continuing disclosure provisions of the Rule and should be construed so as to satisfy the requirements of paragraph (b)(5) of the Rule.

9.08. Effective Date. This resolution shall be in full force and effect from and after its passage.

SECTION 10. REDEMPTION OF SERIES 2011D REFUNDED MATURITIES. The City Administrator, as Registrar of the Series 2011D Bonds, is hereby directed to call the Refunded Bond for redemption and prepayment on the Redemption Date and to give thirty days mailed notice of redemption in the form attached as Exhibit B hereto, all in accordance with the provisions of the resolutions authorizing the issuance of the Series 2011D Bonds.

Upon vote being taken upon the foregoing resolution, the following voted in favor thereof:

and the following voted against the same:

whereupon the resolution was declared duly passed and adopted.

EXHIBIT A

UNITED STATES OF AMERICA
STATE OF MINNESOTA
COUNTY OF CARVER
CITY OF CHASKA
ELECTRIC UTILITY REVENUE REFUNDING BOND, SERIES 2020F

R-___ $_____

Interest Rate	Maturity Date	Date of Original Issue	CUSIP No.
	October 1, 20[__]	December 29, 2020	

REGISTERED OWNER: CEDE & CO.

PRINCIPAL AMOUNT:

The City of Chaska, Carver County, Minnesota (the "City"), acknowledges itself to be indebted and for value received hereby promises to pay to the registered owner specified above, or registered assigns, solely from the Pledged Revenues (each as defined in the bond resolution of the City Council of the City adopted December 7, 2020 (the "Bond Resolution"), the principal amount specified above on the maturity date specified above and promises to pay interest thereon from the date of original issue specified above or from the most recent Interest Payment Date (as defined herein) to which interest has been paid or duly provided for, at the annual interest rate specified above, payable on April 1 and October 1 in each year, commencing October 1, 2021 (each such date, an "Interest Payment Date"), all subject to the provisions referred to herein with respect to the redemption of the principal of this Bond before maturity. The interest so payable on any Interest Payment Date shall be paid to the person in whose name this Bond is registered at the close of business on the fifteenth day (whether or not a business day) of the calendar month next preceding such Interest Payment Date. Interest hereon shall be computed on the basis of a 360-day year composed of twelve 30-day months. The interest hereon and, upon presentation and surrender hereof, the principal hereof, are payable in lawful money of the United States of America by check or draft by U.S Bank National Association, in St. Paul, Minnesota, as bond registrar and paying agent (the "Registrar"), or its designated successor under the Bond Resolution.

This Bond is one of an issue in the aggregate principal amount of $[PAR] (the "Bonds"), issued pursuant to the Bond Resolution to refund the October 1, 2021 through October 1, 2031 maturities of the City's Electric Utility Revenue Bonds, Series 2011D, dated December 22, 2011, and is issued pursuant to and in full conformity with the provisions of the Constitution and laws of the State of Minnesota thereunto enabling, including Minnesota Statutes, Section 453.55 and Chapter 475. This Bond and the interest thereon are payable solely from moneys on hand in the Debt Service Account of the Electric Fund of the City (the "Debt Service Account"), but this Bond shall not constitute a lien on the property comprising the City's Electric Utility. The Bonds shall not constitute a general obligation of the City, and the full faith and credit and taxing powers of the City are not pledged for the payment of the Bonds and interest thereon, and no person shall ever have the right to compel the application of City moneys (other than Pledged Revenues) or the levy of ad valorem taxes for the payment of such principal and interest. The Bonds are issuable only in fully registered form, in denominations of $5,000 or any integral multiple thereof of a single maturity.

The Bonds will not be subject to optional redemption in advance of their respective stated maturity dates.

[Bonds maturing on October 1, 20__ and 20__ (the "Term Bonds") shall be subject to mandatory redemption prior to maturity pursuant to the sinking fund requirements of the Bond Resolution at a redemption price equal to the stated principal amount thereof plus interest accrued thereon to the redemption date, without premium. The Registrar shall select for redemption, by lot or other manner deemed fair, on October 1 in each of the following years the following stated principal amounts of such Bonds:

Term Bonds Maturity October 1 20[__]

Year	Principal Amount

**Stated Maturity*

Term Bonds Maturity October 1 20[__]

Year	Principal Amount

**Stated Maturity*

[The City Administrator shall cause notice of the call for redemption thereof to be published if and as required by law, and at least thirty (30) and not more than sixty (60) days prior to the designated redemption date, shall cause notice of call for redemption to be mailed, by first class mail, to the Registrar and registered holders of any Bonds to be redeemed at their addresses as they appear on the Bond Register described in Section 2.05 hereof, provided that notice shall be given to any securities depository in accordance with its operational arrangements. No defect in or failure to give such notice of redemption shall affect the validity of proceedings for the redemption of any Bond not affected by such defect or failure. Official notice of redemption having been given as aforesaid, the Bonds or portions of Bonds so to be redeemed shall, on the redemption date, become due and payable at the redemption price therein specified and from and after such date (unless the City shall default in the payment of the redemption price) such Bonds or portions of Bonds shall cease to bear interest. Upon partial redemption of any Bond, a new Bond or Bonds will be delivered to the owner without charge, representing the remaining principal amount outstanding.]

As provided in the Bond Resolution and subject to certain limitations set forth therein, this Bond is transferable upon the Bond Register maintained by the Registrar at its principal office, upon surrender of this Bond for transfer at such office, duly endorsed by the registered owner hereof in person or by the owner's attorney duly authorized in writing upon surrender hereof together with a written instrument of transfer satisfactory to the Registrar, duly executed by the registered owner or the owner's attorney, and may also be surrendered in exchange for Bonds of other authorized denominations. Upon such transfer or exchange the City will cause a new Bond or Bonds to be issued in the name of the designated transferee or transferees, of the same aggregate principal amount, bearing interest at the same rate and maturing on the same date. The Registrar may require payment of a sum sufficient to pay any tax, fee or governmental charge required to be paid with respect to any such transfer or exchange.

The Bonds have been designated as "qualified tax-exempt obligations" pursuant to Section 265(b) of the Internal Revenue Code of 1986, as amended.

The City and the Registrar may deem and treat the person in whose name this Bond is registered as the absolute owner hereof, whether this Bond is overdue or not, for the purpose of receiving payment as herein provided and for all other purposes, and neither the City nor the Registrar shall be affected by any notice to the contrary.

Notwithstanding any other provisions of this Bond, so long as this Bond is registered in the name of Cede & Co., as nominee of The Depository Trust Company, or in the name of any other nominee of The Depository Trust Company or other securities depository, the Registrar shall pay all principal of and interest on this Bond, and shall give all notices with respect to this Bond, only to Cede & Co. or other nominee in accordance with the operational arrangements of The Depository Trust Company or other securities depository as agreed to by the City.

This Bond shall not be valid or become obligatory for any purpose or be entitled to any security or benefit under the resolution authorizing its issuance until the Certificate of Authentication hereon shall have been executed by the Bond Registrar by the manual signature of one of its authorized representatives.

IT IS HEREBY CERTIFIED, RECITED, COVENANTED AND AGREED that all acts, conditions and things required by the Constitution and laws of the State of Minnesota to be done, to exist, to happen and to be performed precedent to and in the issuance of this Bond in order to make this Bond a valid and binding special obligation of the City according to its terms have been done, do exist, have happened and have been performed in regular and due form as so required; that in and by the Resolution the City has covenanted and agreed with the owners of the Bonds that, to the extent permitted by law, it will impose and collect charges for the service, use and availability of the Electric Utility at the times and in the amounts required to produce Pledged Revenues in each year during which the Bonds are outstanding at least equal to 120% of the principal and interest coming due on the Bonds, and any other bonds heretofore or hereafter issued on a parity with the Bonds in accordance with the provisions of the Bond Resolution, in such year and has pledged and appropriated the Pledged Revenues to the Debt Service Account to the extent necessary to pay such principal and interest when due; that in and by the Bond Resolution, the City has made other covenants for the security and payment of the Bonds, including the establishment and maintenance of a Series 2020F Debt Service Reserve Account in the amount specified in the Bond Resolution with respect to the Bonds and any parity bonds hereafter issued, and will at all times comply therewith; that the City will authorize and issue additional bonds payable from the Debt Service Account on a parity with the Bonds only in strict accordance with the provisions of the Bond Resolution; and that the issuance of this Bond does not cause the indebtedness of the City to exceed any constitutional or statutory limitation.

IN WITNESS WHEREOF, the City of Chaska, Carver County, Minnesota, by its City Council, has caused this Bond to be executed by the printed facsimile signatures of the Mayor and the City Administrator.

CITY OF CHASKA, MINNESOTA

_____ _____

(facsimile signature – City Administrator) (facsimile signature – Mayor)

_____

CERTIFICATE OF AUTHENTICATION

Date of Authentication: _____

This is one of the Bonds delivered pursuant to the Resolution mentioned within.

U.S. BANK, NATIONAL ASSOCIATION, as Registrar

By _____

Authorized Representative

_____

The following abbreviations, when used in the inscription on the face of this Bond, shall be construed as though they were written out in full according to the applicable laws or regulations:

TEN COM --as tenants in common

UTMA ……. as Custodian for …..…….
(Cust) (Minor)

TEN ENT --as tenants by the entireties

under Uniform Transfers to Minors Act …….…….
(State)

JT TEN --as joint tenants with right of survivorship and not as tenants in common

Additional abbreviations may also be used.

_____

ASSIGNMENT

For value received, the undersigned hereby sells, assigns and transfers unto _____ the within Bond and all rights thereunder, and does hereby irrevocably constitute and appoint _____ attorney to transfer the said Bond on the books kept for registration of the within Bond, with full power of substitution in the premises.

Dated: _____

_____

NOTICE: The assignor's signature to this assignment must correspond with the name as it appears upon the face of the within Bond in every particular, without alteration or enlargement or any change whatsoever.

Signature Guaranteed: _____

Signature(s) must be guaranteed by an "eligible guarantor institution" meeting the requirements of the Registrar, which requirements include membership or participation in STAMP or such other "signature guaranty program" as may be determined by the Registrar in addition to or in substitution for STAMP, all in accordance with the Securities Exchange Act of 1934, as amended.

Please insert social security or other identifying number of assignee: _____

EXHIBIT B

NOTICE OF REDEMPTION

$3,535,000 Electric Utility Revenue Bonds, Series 2011D
Dated as of December 22, 2011
City of Chaska, Minnesota

NOTICE IS HEREBY GIVEN that the City of Chaska, Minnesota, has called for redemption and prepayment on February 1, 2021 (the "Redemption Date"), the outstanding Bonds of the above-referenced issue (the "Bonds") maturing on February 1 in the following years, in the principal amounts and having the interest rates and CUSIP numbers listed below:

Year	Amount	Interest Rate	CUSIP Number*	Year	Amount	Interest Rate	CUSIP Number*
2021	$165,000	2.400%	161670EA8	2027	$200,000	3.300%	161670EG5
2022	170,000	2.600	161670EB6	2028	210,000	3.400	161670EH3
2023	180,000	2.750	161670EC4	2029	215,000	3.500	161670EJ9
2024	185,000	2.800	161670ED2	2030	225,000	3.550	161670EK6
2025	185,000	3.000	161670EE0	2031	235,000	3.650	161670EL4
2026	190,000	3.200	161670EF7				

*Denotes Full Call.

The Bonds will be redeemed at a price of 100% of their principal amount plus accrued interest to the Redemption Date. On the Redemption Date, interest thereon shall cease to accrue. Such redemption price will be payable upon each such bond on the next succeeding business day following the Redemption Date.

A Form W-9, Payer's Request for Taxpayer Identification Number, must be completed and returned with the called Bond or 31% of the redemption proceeds will be withheld. Payment of bonds to be redeemed will be made on and after February 1, 2021, by submitting said Bond along with the completed form W-9 to the City Administrative Services Director at One City Hall Plaza, Chaska, Minnesota 55318.

Pursuant to U.S. federal tax laws, you have a duty to provide the applicable type of tax certification form issued by the U.S. Internal Revenue Service ("IRS") to the City to ensure payments are reported accurately to you and to the IRS. In order to permit accurate withholding (or to prevent withholding), a complete and valid tax certification form must be received by the City before payment of the redemption proceeds is made to you. Failure to timely provide a valid tax certification form as required will result in the maximum amount of U.S. withholding tax being deducted from any redemption payment that is made to you.

Additional information may be obtained from the undersigned or from Baker Tilly Municipal Advisors, LLC, 380 Jackson Street, Suite 300, St. Paul, Minnesota (651-223-3000), municipal advisor to the City.

Dated: _____, 2020

BY ORDER OF THE CITY COUNCIL
CITY OF CHASKA, MINNESOTA

By s/_____
Matt Podhradsky, City Administrator

CERTIFICATION OF MINUTES RELATING TO
GENERAL OBLIGATION STATE AID STREET BONDS, SERIES 2021A

Issuer: City of Chaska, Minnesota

Governing Body: City Council

Kind, date, time and place of meeting: A regular meeting held December 7, 2020, at 7:00 p.m., at City Hall.

Members present:

Members absent:

Documents Attached:
Minutes of said meeting (including):

RESOLUTION NO. 2020-95

RESOLUTION AUTHORIZING ISSUANCE, ESTABLISHING PRICING COMMITTEE TO AWARD SALE, PRESCRIBING THE FORM AND DETAILS AND PROVIDING FOR THE PAYMENT OF GENERAL OBLIGATION STATE AID STREET BONDS, SERIES 2021A

I, the undersigned, being the duly qualified and acting recording officer of the public corporation issuing the Bonds referred to in the title of this certificate, certify that the documents attached hereto, as described above, have been carefully compared with the original records of said corporation in my legal custody, from which they have been transcribed; that said documents are a correct and complete transcript of the minutes of a meeting of the governing body of said corporation, and correct and complete copies of all resolutions and other actions taken and of all documents approved by the governing body at said meeting, so far as they relate to said Bonds; and that said meeting was duly held by the governing body at the time and place and was attended throughout by the members indicated above, pursuant to call and notice of such meeting given as required by law.

WITNESS my hand officially as such recording officer December 7, 2020.

_____
City Administrator

Councilmember _____ introduced the following resolution and moved its adoption, which motion was seconded by Councilmember _____:

RESOLUTION NO. 2020-95

RESOLUTION AUTHORIZING ISSUANCE, ESTABLISHING PRICING COMMITTEE TO AWARD SALE, PRESCRIBING THE FORM AND DETAILS AND PROVIDING FOR THE PAYMENT OF GENERAL OBLIGATION STATE AID STREET BONDS, SERIES 2021A

BE IT RESOLVED by the City Council (the "Council"), of the City of Chaska, Minnesota (the "City"), as follows:

Section 1. Authorization and Sale.

1.01. Authorization.

Minnesota Statutes, Section 162.18 (the "Act") permits the City to issue and sell its obligations for the purpose of establishing, locating, relocating, constructing, reconstructing, and improving municipal state-aid streets therein. Such obligations must be issued in amounts and on terms such that the average annual amount of principal and interest due in all subsequent calendar years on the obligations, including any similar obligations of the City which are outstanding (such amount, $296,715, inclusive of the Bonds described hereinafter), shall not exceed 90 percent of the amount of the last annual allotment preceding the bond issue received by the City from the construction account in the municipal state-aid street fund ($869,493).

Pursuant to the Act, this Council hereby determines to issue and sell its definitive General Obligation State Aid Street Bonds, Series 2021A, of the City (the "Bonds") to (i) redeem on February 15, 2021 (the "Redemption Date") a portion of the City's $20,000,000 General Obligation Temporary State Aid Street Bonds, Series 2019A, dated March 29, 2019 (the "Temporary Bonds"), currently outstanding in the principal amount of $6,955,000, and (ii) pay costs of issuance of the Bonds. The Temporary Bonds financed the cost of state aid street improvement projects within the City (the "Projects").

Together with the proceeds from the sale of the Bonds being used to redeem a portion of the outstanding amount of Temporary Bonds, the City intends to use funds received from the State or County to redeem the total outstanding amount of the Temporary Bonds.

This Council hereby establishes a pricing committee (the "Pricing Committee," as further described below), which Pricing Committee shall meet on December 16, 2020 or such other date as the Pricing Committee shall approve, up to and including December 31, 2020, for the purpose of considering proposals for and awarding the sale of the Bonds based on the Terms of Proposal prepared by Baker Tilly Municipal Advisors, LLC ("Baker Tilly") attached hereto as EXHIBIT C and the following parameters:

- The total principal amount of the Bonds shall not exceed $5,500,000;

- The true interest cost of the Bonds shall not exceed 3.50%.

The Bonds are authorized to be issued without authorization by the electors, and shall not be included in the net debt of the City for the purpose of any statutory or charter limitation on indebtedness.

1.02. Sale. The City has retained Baker Tilly as independent municipal advisor in connection with the sale of the Bonds. Pursuant to Minnesota Statutes, Section 475.60, Subdivision 2, paragraph (9), the requirements as to public sale do not apply to the issuance of the Bonds.

The Mayor (or Councilmember designated by the Mayor) and the City Administrator (the "Pricing Committee") are hereby authorized and directed to agree with a purchaser of the Bonds (the "Purchaser") upon the exact purchase price, principal amount, maturities, redemption provisions and interest rate or rates for the Bonds, within the parameters set forth in Section 1.01. The Mayor and City Administrator are hereby authorized to execute a contract on behalf of the City for the sale of the Bonds and such execution shall be conclusive evidence of such agreement and shall be binding upon the City. In the absence or unavailability of any member of the Pricing Committee, the acting Mayor or City Administrator may act in place of such member, and a purchase contract may be signed by such acting Mayor or City Administrator.

1.03. Officials Authorized to Execute Documents. The Mayor and City Administrator are hereby authorized and directed to execute and deliver any purchase contract and the documents required thereunder, the Official Statement, the Bonds and any other documents required to complete the financing contemplated hereby. Execution and delivery of such documents by the Mayor and City Administrator shall constitute evidence that such items are consistent with the terms of this resolution and have been duly authorized, executed and delivered by the City and are enforceable against the City in accordance with their terms, subject to customary exceptions relating to bankruptcy, reorganization, insolvency and other laws affecting creditors' rights. The Mayor and City Administrator are further authorized to take such other actions as may be required to effectuate the terms and intent of this resolution. In the event of the absence or disability of the Mayor and City Administrator, the acting Mayor and City Administrator are hereby authorized to act in the place and stead of the Mayor and City Administrator, and to take all actions and execute all documents approved hereby.

Section 2. Bond Terms; Registration; Execution and Delivery.

2.01. Reserved.

2.02. Maturities; Interest Rates; Denominations and Payment. The Bonds shall be originally dated January 14, 2021, shall be in the denomination of $5,000 each, or any integral multiple thereof, of single maturities, shall mature on the dates and shall bear interest from their date of issue until paid or duly called for redemption at the rate(s) set forth in the purchase contract or final Official Statement.

The Bonds shall be issuable only in fully registered form. The interest thereon and, upon surrender of each Bond, the principal amount thereof shall be payable by check or draft issued by

the Registrar (as defined herein); provided that, so long as the Bonds are registered in the name of a securities depository, or a nominee thereof, in accordance with Section 2.08, principal and interest shall be payable in accordance with the operational arrangements of the securities depository.

2.03. Dates and Interest Payment Dates. Interest on the Bonds shall be payable semiannually on April 1 and October 1 of each year, commencing October 1, 2021, each such date being referred to herein as an Interest Payment Date, to the person in whose name the Bonds are registered on the Bond Register, as hereinafter defined, at the Registrar's close of business on the fifteenth day of the calendar month next preceding such Interest Payment Date, whether or not such day is a business day. Interest shall be computed on the basis of a 360-day year composed of twelve 30-day months.

2.04. Redemption. Bonds maturing in 2031 and later years shall be subject to redemption and prepayment at the option of the City, in whole or in part, in such order of maturity dates as the City may select and, within a maturity, by lot as selected by the Registrar (or, if applicable, by the bond depository in accordance with its customary procedures) in multiples of $5,000, on April 1, 2030, and on any date thereafter, at a price equal to the principal amount thereof and accrued interest to the date of redemption.

The Bonds shall be subject to any mandatory redemption provisions set forth in the purchase agreement, final Official Statement and forms thereof.

The City Administrator shall cause notice of the call for redemption thereof to be published if and as required by law, and at least thirty and not more than 60 days prior to the designated redemption date, shall cause notice of call for redemption to be mailed, by first class mail, to the registered holders of any Bonds to be redeemed at their addresses as they appear on the bond register described in Section 2.06 hereof, provided that notice shall be given to any securities depository in accordance with its operational arrangements. No defect in or failure to give such notice of redemption shall affect the validity of proceedings for the redemption of any Bond not affected by such defect or failure. Official notice of redemption having been given as aforesaid, the Bonds or portions of Bonds so to be redeemed shall, on the redemption date, become due and payable at the redemption price therein specified and from and after such date (unless the City shall default in the payment of the redemption price) such Bonds or portions of Bonds shall cease to bear interest. Upon partial redemption of any Bond, a new Bond or Bonds will be delivered to the owner without charge, representing the remaining principal amount outstanding.

2.05. Appointment of Initial Registrar. The City hereby appoints U.S. Bank National Association, in St. Paul, Minnesota, as the initial bond registrar, transfer agent and paying agent (the "Registrar"). The City reserves the right to remove the Registrar, effective upon not less than thirty days' written notice and upon the appointment and acceptance of a successor Registrar, in which event the predecessor Registrar shall deliver all cash and Bonds in its possession to the successor Registrar and shall deliver the Bond Register to the successor Registrar.

2.06. Registration. The effect of registration and the rights and duties of the City and the Registrar with respect thereto shall be as follows:

(a) Register. The Registrar shall keep at its principal corporate trust office a bond register in which the Registrar shall provide for the registration of ownership of Bonds and the registration of transfers and exchanges of Bonds entitled to be registered, transferred or exchanged.

(b) Transfer of Bonds. Upon surrender for transfer of any Bond duly endorsed by the registered owner thereof or accompanied by a written instrument of transfer, in form satisfactory to the Registrar, duly executed by the registered owner thereof or by an attorney duly authorized by the registered owner in writing, the Registrar shall authenticate and deliver, in the name of the designated transferee or transferees, one or more new Bonds of a like aggregate principal amount and maturity, as requested by the transferor. The Registrar may, however, close the books for registration of any transfer after the fifteenth day of the month preceding each interest payment date and until such interest payment date.

(c) Exchange of Bonds. Whenever any Bonds are surrendered by the registered owner for exchange the Registrar shall authenticate and deliver one or more new Bonds of a like aggregate principal amount and maturity, as requested by the registered owner or the owner's attorney in writing.

(d) Cancellation. All Bonds surrendered upon any transfer or exchange shall be promptly canceled by the Registrar and thereafter disposed of as directed by the City.

(e) Improper or Unauthorized Transfer. When any Bond is presented to the Registrar for transfer, the Registrar may refuse to transfer the same until it is satisfied that the endorsement on such Bond or separate instrument of transfer is valid and genuine and that the requested transfer is legally authorized. The Registrar shall incur no liability for the refusal, in good faith, to make transfers which it, in its judgment, deems improper or unauthorized.

(f) Persons Deemed Owners. The City and the Registrar may treat the person in whose name any Bond is at any time registered in the bond register as the absolute owner of the Bond, whether the Bond shall be overdue or not, for the purpose of receiving payment of or on account of, the principal of and interest on the Bond and for all other purposes; and all payments made to any registered owner or upon the owner's order shall be valid and effectual to satisfy and discharge the liability upon Bond to the extent of the sum or sums so paid.

(g) Taxes, Fees and Charges. For every transfer or exchange of Bonds (except for an exchange upon a partial redemption of an Bond), the Registrar may impose a charge upon the owner thereof sufficient to reimburse the Registrar for any tax, fee or other governmental charge required to be paid with respect to such transfer or exchange.

(h) Mutilated, Lost, Stolen or Destroyed Bonds. In case any Bond shall become mutilated or be destroyed, stolen or lost, the Registrar shall deliver a new Bond of like amount, number, maturity date and tenor in exchange and substitution for and upon cancellation of any such mutilated Bond or in lieu of and in substitution for any Bond

destroyed, stolen or lost, upon the payment of the reasonable expenses and charges of the Registrar in connection therewith; and, in the case of an Bond destroyed, stolen or lost, upon filing with the Registrar of evidence satisfactory to it that the Bond was destroyed, stolen or lost, and of the ownership thereof, and upon furnishing to the Registrar of an appropriate bond or indemnity in form, substance and amount satisfactory to it, in which both the City and the Registrar shall be named as obligees. All Bonds so surrendered to the Registrar shall be canceled by it and evidence of such cancellation shall be given to the City. If the mutilated, destroyed, stolen or lost Bond has already matured or been called for redemption in accordance with its terms it shall not be necessary to issue a new Bond prior to payment.

(i) Authenticating Agent. The Registrar is hereby designated authenticating agent for the Bonds, within the meaning of Minnesota Statutes, Section 475.55, Subdivision 1, as amended.

(j) Valid Bonds. All Bonds issued upon any transfer or exchange of Bonds shall be the valid Bonds of the City, evidencing the same debt, and entitled to the same benefits under this Resolution as the Bonds surrendered upon such transfer or exchange.

2.07. Execution, Authentication and Delivery. The Bonds shall be prepared under the direction of the City Administrator and shall be executed on behalf of the City by the signatures of the Mayor and the City Administrator, provided that the signatures may be printed, engraved or lithographed facsimiles of the originals. In case any officer whose signature or a facsimile of whose signature shall appear on the Bonds shall cease to be such officer before the delivery of any Bond, such signature or facsimile shall nevertheless be valid and sufficient for all purposes, the same as if such officer had remained in office until delivery. Notwithstanding such execution, no Bond shall be valid or obligatory for any purpose or entitled to any security or benefit under this Resolution unless and until a certificate of authentication on the Bond has been duly executed by the manual signature of an authorized representative of the Registrar. Certificates of authentication on different Bonds need not be signed by the same representative. The executed certificate of authentication on each Bond shall be conclusive evidence that it has been authenticated and delivered under this Resolution. When the Bonds have been prepared, executed and authenticated, the City Administrator shall deliver them to the Purchaser.

2.08. Securities Depository. For purposes of this section the following terms shall have the following meanings:

"Beneficial Owner" shall mean, whenever used with respect to a Bond, the person in whose name such Bond is recorded as the beneficial owner of such Bond by a Participant on the records of such Participant, or such person's subrogee.

"Cede & Co." shall mean Cede & Co., the nominee of DTC, and any successor nominee of DTC with respect to the Bonds.

"DTC" shall mean The Depository Trust Company of New York, New York.

"Participant" shall mean any broker-dealer, bank or other financial institution for which DTC holds Bonds as securities depository.

"Representation Letter" shall mean the Representation Letter pursuant to which the City agrees to comply with DTC's Operational Arrangements.

The Bonds shall be initially issued as separately authenticated fully registered bonds, and one Bond shall be issued in the principal amount of each stated maturity of the Bonds. Upon initial issuance, the ownership of such Bonds shall be registered in the bond register in the name of Cede & Co., as nominee of DTC. The Registrar and the City may treat DTC (or its nominee) as the sole and exclusive owner of the Bonds registered in its name for the purposes of payment of the principal of or interest on the Bonds, selecting the Bonds or portions thereof to be redeemed, if any, giving any notice permitted or required to be given to registered owners of Bonds under this resolution, registering the transfer of Bonds, and for all other purposes whatsoever; and neither the Registrar nor the City shall be affected by any notice to the contrary. Neither the Registrar nor the City shall have any responsibility or obligation to any Participant, any person claiming a beneficial ownership interest in the Bonds under or through DTC or any Participant, or any other person which is not shown on the bond register as being a registered owner of any Bonds, with respect to the accuracy of any records maintained by DTC or any Participant, with respect to the payment by DTC or any Participant of any amount with respect to the principal of or interest on the Bonds, with respect to any notice which is permitted or required to be given to owners of Bonds under this resolution, with respect to the selection by DTC or any Participant of any person to receive payment in the event of a partial redemption of the Bonds, or with respect to any consent given or other action taken by DTC as registered owner of the Bonds. So long as any Bond is registered in the name of Cede & Co., as nominee of DTC, the Registrar shall pay all principal of and interest on such Bond, and shall give all notices with respect to such Bond, only to Cede & Co. in accordance with DTC's Operational Arrangements, and all such payments shall be valid and effective to fully satisfy and discharge the City's obligations with respect to the principal of and interest on the Bonds to the extent of the sum or sums so paid. No person other than DTC shall receive an authenticated Bond for each separate stated maturity evidencing the obligation of the City to make payments of principal and interest. Upon delivery by DTC to the Registrar of written notice to the effect that DTC has determined to substitute a new nominee in place of Cede & Co., the Bonds will be transferable to such new nominee in accordance with paragraph (e) hereof.

In the event the City determines that it is in the best interest of the Beneficial Owners that they be able to obtain Bonds in the form of bond certificates, the City may notify DTC and the Registrar, whereupon DTC shall notify the Participants of the availability through DTC of Bonds in the form of certificates. In such event, the Bonds will be transferable in accordance with paragraph (e) hereof. DTC may determine to discontinue providing its services with respect to the Bonds at any time by giving notice to the City and the Registrar and discharging its responsibilities with respect thereto under applicable law. In such event the Bonds will be transferable in accordance with paragraph (e) hereof.

The execution and delivery of the Representation Letter to DTC, if not previously filed with DTC, by the Mayor or City Administrator is hereby authorized and directed.

In the event that any transfer or exchange of Bonds is permitted under paragraph (b) or (c) hereof, such transfer or exchange shall be accomplished upon receipt by the Registrar of the Bonds to be transferred or exchanged and appropriate instruments of transfer to the permitted transferee in accordance with the provisions of this resolution. In the event Bonds in the form of certificates are issued to owners other than Cede & Co., its successor as nominee for DTC as owner of all the Bonds, or another securities depository as owner of all the Bonds, the provisions of this resolution shall also apply to all matters relating thereto, including, without limitation, the printing of such Bonds in the form of bond certificates and the method of payment of principal of and interest on such Bonds in the form of bond certificates. The Bonds shall be issuable only in fully registered form. The interest thereon and, upon surrender of each Bond, the principal amount thereof, shall be payable by check or draft issued by the Registrar; provided that, so long as the Bonds are registered in the name of a securities depository, or a nominee thereof, principal and interest shall be payable in accordance with the operational arrangements of the securities depository.

2.09. Form of Bonds. The Bonds shall be prepared in substantially the form found at EXHIBIT A.

Section 3. Use of Proceeds; Notice of Redemption. Proceeds of the Bonds, together with any funds received from the State or County, shall be deposited in the sinking fund established for the Temporary Bonds to be applied to their payment on the Redemption Date and proceeds of the Bonds shall also be used to pay costs of issuance of the Bonds.

The City Administrator, as paying agent for the Temporary Bonds, is directed to provide Old National Bank notice of the call of the Temporary Bonds for redemption and prepayment on the Redemption Date, substantially in the form attached hereto as EXHIBIT B, all in accordance with the provisions of the resolution authorizing the issuance of the Temporary Bonds.

Section 4. General Obligation State Aid Street Bonds, Series 2021A Debt Service Fund. There is hereby created and shall be maintained on the official books and records of the City a General Obligation State Aid Street Bonds, Series 2021A Debt Service Fund (the "Debt Service Fund"), the moneys in which shall be used solely for the payment of the principal of and interest on the Bonds. There is hereby irrevocably appropriated to the Debt Service Fund, out of moneys allotted and to be allotted to the City from its account in the municipal state aid street fund of the State of Minnesota, such amount as shall be sufficient to pay the principal of and interest on the Bonds when due, subject to abatement from other funds received by the City for application to debt service on or prepayment of the Bonds, including but not limited to reimbursements received with respect to the Projects, or the proceeds of taxes levied pursuant to Section 5 hereof.

Section 5. Pledge of Taxing Powers. For the prompt and full payment of the principal of and interest on the Bonds as such payments respectively become due, the full faith, credit and unlimited taxing powers of the City shall be and are hereby irrevocably pledged. However, it is presently estimated that the state aid allotments, together with other funds to be appropriated by the City to the Debt Service Fund, will produce amounts not less than 5% in excess of the amounts needed to meet when due the principal and interest payments on the Bonds and therefore no ad valorem taxes are required to be levied at this time.

Section 6. Defeasance. When all of the Bonds have been discharged as provided in this section, all pledges, covenants and other rights granted by this Resolution to the holders of the Bonds shall cease. The City may discharge its obligations with respect to any Bonds which are due on any date by depositing with the Purchaser on or before that date a sum sufficient for the payment thereof in full; or, if any Bond should not be paid when due, it may nevertheless be discharged by depositing with the Purchaser a sum sufficient for the payment thereof in full with interest accrued from the due date to the date of such deposit. The City may also at any time discharge its obligation with respect to any Bonds, subject to the provisions of law now or hereafter authorizing and regulating such action, by depositing irrevocably in escrow, with a bank or trust company qualified by law as an escrow agent for this purpose, cash or securities which are authorized by law to be so deposited, bearing interest payable at such time and at such rates and maturing or callable at the holder's option on such dates as shall be required to pay all principal and interest to become due thereon to maturity.

Section 7. Certification of Proceedings.

7.01. Registration of Bonds and Levy of Taxes. The City Administrator is hereby authorized and directed to file a certified copy of this resolution with the County Auditor of Carver County and obtain a certificate that the Bonds have been duly entered upon the Auditor's bond register.

7.02. Authentication of Transcript. The officers of the City and the County Auditor are hereby authorized and directed to prepare and furnish to the Purchaser and to Dorsey & Whitney LLP, Bond Counsel, certified copies of all proceedings and records relating to the Bonds and such other affidavits, certificates and information as may be required to show the facts relating to the legality and marketability of the Bonds, as the same appear from the books and records in their custody and control or as otherwise known to them, and all such certified copies, affidavits and certificates, including any heretofore furnished, shall be deemed representations of the City as to the correctness of all statements contained therein.

Section 8. Tax Covenants; Arbitrage Matters; Reimbursement and Continuing Disclosure.

8.01. General Tax Covenant. The City covenants and agrees with the registered owners from time to time of the Bonds that it will not take, or permit to be taken by any of its officers, employees or agents, any actions that would cause interest on the Bonds to become includable in gross income of the recipient under the Internal Revenue Code of 1986, as amended (the "Code") and applicable Treasury Regulations (the "Regulations"), and covenants to take any and all actions within its powers to ensure that the interest on the Bonds will not become includable in gross income of the recipient under the Code and the Regulations. In particular, the City covenants and agrees that all proceeds of the Bonds will be expended solely for the payment of the costs of the Project. The City shall not enter into any lease, use or other agreement with any non-governmental person relating to the use of the Project or security for the payment of the Bonds which might cause the Bonds to be considered "private activity bonds" or "private loan bonds" pursuant to Section 141 of the Code.

8.02. Certification. The Mayor and City Administrator, being the officers of the City charged with the responsibility for issuing the Bonds pursuant to this Resolution, are authorized

and directed to execute and deliver to the Purchaser a certificate in accordance with the provisions of Section 148 of the Code and Regulations, stating the facts, estimates and circumstances in existence on the date of issue and delivery of the Bonds which make it reasonable to expect that the proceeds of the Bonds will not be used in a manner that would cause the Bonds to be "arbitrage bonds" within the meaning of the Code and Regulations.

8.03. Arbitrage Rebate. The City acknowledges that the Bonds are subject to the rebate requirements of Section 148(f) of the Code. The City covenants and agrees to retain such records, make such determinations, file such reports and documents and pay such amounts at such times as are required under said Section 148(f) and applicable Regulations unless the Bonds qualify for an exception from the rebate requirement pursuant to one of the spending exceptions set forth in Section 1.148-7 of the Regulations and no "gross proceeds" of the Bonds (other than amounts constituting a "bona fide debt service fund") arise during or after the expenditure of the original proceeds thereof.

8.04. Qualified Tax-Exempt Obligations. The Council hereby designates the Bonds as "qualified tax-exempt obligations" for purposes of Section 265(b)(3) of the Code relating to the disallowance of interest expense for financial institutions, and hereby finds that the reasonably anticipated amount of tax-exempt obligations which are not private activity bonds (not treating qualified 501(c)(3) bonds under Section 145 of the Code as private activity bonds for the purpose of this representation) which will be issued by the City and all subordinate entities during calendar year 2021 does not exceed $10,000,000.

8.05. Official Statement. The Preliminary Official Statement relating to the Bonds, prepared and distributed by Baker Tilly, is hereby approved. Baker Tilly is hereby authorized on behalf of the City to prepare and distribute to the Purchaser within seven business days from the date hereof, a Final Official Statement listing the offering price, the interest rates, selling compensation, delivery date, the underwriters and such other information relating to the Bonds required to be included in the Official Statement by Rule l5c2-12 adopted by the Securities and Exchange Commission under the Securities Exchange Act of 1934. The officers of the City are hereby authorized and directed to execute such certificates as may be appropriate concerning the accuracy, completeness and sufficiency of the Official Statement

8.06. Continuing Disclosure. (a) Purpose and Beneficiaries. To provide for the public availability of certain information relating to the Bonds and the security therefor and to permit the Purchaser and other participating underwriters in the primary offering of the Bonds to comply with amendments to Rule 15c2-12 promulgated by the SEC under the Securities Exchange Act of 1934 (17 C.F.R. § 240.15c2-12), relating to continuing disclosure (as in effect and interpreted from time to time, the Rule), which will enhance the marketability of the Bonds, the City hereby makes the following covenants and agreements for the benefit of the Owners (as hereinafter defined) from time to time of the outstanding Bonds. The City is the only obligated person in respect of the Bonds within the meaning of the Rule for purposes of identifying the entities in respect of which continuing disclosure must be made. The City has complied in all material respects with any undertaking previously entered into by it under the Rule. If the City fails to comply with any provisions of this section, any person aggrieved thereby, including the Owners of any outstanding Bonds, may take whatever action at law or in equity may appear necessary or appropriate to enforce performance and observance of any agreement or covenant contained in this section,

including an action for a writ of mandamus or specific performance. Direct, indirect, consequential and punitive damages shall not be recoverable for any default hereunder to the extent permitted by law. Notwithstanding anything to the contrary contained herein, in no event shall a default under this section constitute a default under the Bonds or under any other provision of this resolution. As used in this section, Owner or Bondowner means, in respect of a Bond, the registered owner or owners thereof appearing in the bond register maintained by the Registrar or any Beneficial Owner (as hereinafter defined) thereof, if such Beneficial Owner provides to the Registrar evidence of such beneficial ownership in form and substance reasonably satisfactory to the Registrar. As used herein, Beneficial Owner means, in respect of a Bond, any person or entity which (a) has the power, directly or indirectly, to vote or consent with respect to, or to dispose of ownership of, such Bond (including persons or entities holding Bonds through nominees, depositories or other intermediaries), or (b) is treated as the owner of the Bond for federal income tax purposes.

(b) Information To Be Disclosed. The City will provide, in the manner set forth in subsection (c) hereof, either directly or indirectly through an agent designated by the City, the following information at the following times:

(1) on or before twelve (12) months after the end of each fiscal year of the City, commencing with the fiscal year ending December 31, 2020, the following financial information and operating data in respect of the City (the "Disclosure Information"):

(A) the audited financial statements of the City for such fiscal year, prepared in accordance with generally accepted accounting principles in accordance with the governmental accounting standards promulgated by the Governmental Accounting Standards Board or as otherwise provided under Minnesota law, as in effect from time to time, or, if and to the extent such financial statements have not been prepared in accordance with such generally accepted accounting principles for reasons beyond the reasonable control of the City, noting the discrepancies therefrom and the effect thereof, and certified as to accuracy and completeness in all material respects by the fiscal officer of the City; and

(B) to the extent not included in the financial statements referred to in paragraph (A) hereof, the information for such fiscal year or for the period most recently available of the type contained in the Official Statement under headings: "City Property Values;" "City Indebtedness;" and "City Tax Rates, Levies and Collections."

Notwithstanding the foregoing paragraph, if the audited financial statements are not available by the date specified, the City shall provide on or before such date unaudited financial statements in the format required for the audited financial statements as part of the Disclosure Information and, within 10 days after the receipt thereof, the City shall provide the audited financial statements. Any or all of the Disclosure Information may be incorporated by reference, if it is updated as required hereby, from other documents, including official statements, which have been filed with the SEC or have been made available to the public on the Internet Web site of the Municipal Securities Rulemaking Board ("MSRB"). The City shall clearly identify in the Disclosure

Information each document so incorporated by reference. If any part of the Disclosure Information can no longer be generated because the operations of the City have materially changed or been discontinued, such Disclosure Information need no longer be provided if the City includes in the Disclosure Information a statement to such effect, provided, however, if such operations have been replaced by other City operations in respect of which data is not included in the Disclosure Information and the City determines that certain specified data regarding such replacement operations would be described in paragraph (2) hereof, then, from and after such determination, the Disclosure Information shall include such additional specified data regarding the replacement operations. If the Disclosure Information is changed or this section is amended as permitted by this paragraph (b)(1) or subsection (d), then the City shall include in the next Disclosure Information to be delivered hereunder, to the extent necessary, an explanation of the reasons for the amendment and the effect of any change in the type of financial information or operating data provided.

(2) In a timely manner not in excess of ten business days after the occurrence of the event, notice of the occurrence of any of the following events:

(A) Principal and interest payment delinquencies;
(B) Non-payment related defaults, if material;
(C) Unscheduled draws on debt service reserves reflecting financial difficulties;
(D) Unscheduled draws on credit enhancements reflecting financial difficulties;
(E) Substitution of credit or liquidity providers, or their failure to perform;
(F) Adverse tax opinions, the issuance by the Internal Revenue Service of proposed or final determinations of taxability, Notices of Proposed Issue (IRS Form 5701-TEB) or other material notices or determinations with respect to the tax status of the Bonds, or other material events affecting the tax status of the Bonds;
(G) Modifications to rights of Bond holders, if material;
(H) Bond calls, if material, and tender offers;
(I) Defeasances;
(J) Release, substitution, or sale of property securing repayment of the Bonds, if material;
(K) Rating changes;
(L) Bankruptcy, insolvency, receivership or a similar event with respect to the City;
(M) The consummation of a merger, consolidation, or acquisition involving an obligated person or the sale of all or substantially all of the assets of the obligated person, other than in the ordinary course of business, the entry into a definitive agreement to undertake such an action or the termination of a definitive agreement relating to any such actions, other than pursuant to its terms, if material;
(N) Appointment of a successor or additional trustee or the change of name of a trustee, if material;
(O) Incurrence of a financial obligation of the obligated person, if material, or agreement to covenants, events of default, remedies, priority rights, or other similar terms of a financial obligation of the obligated person, any of which affect security holders, if material; and

(P) Default, event of acceleration, termination event, modification of terms, or other similar events under the terms of a financial obligation of the obligated person, any of which reflect financial difficulties.

For purposes of the events identified in paragraphs (O) and (P) above, the term "financial obligation" means (i) a debt obligation; (ii) a derivative instrument entered into in connection with, or pledged as security or a source of payment for, an existing or planned debt obligation; or (iii) a guarantee of (i) or (ii). The term "financial obligation" shall not include municipal securities as to which a final official statement has been provided to the MSRB consistent with the Rule.

As used herein, for those events that must be reported if material, an event is "material" if it is an event as to which a substantial likelihood exists that a reasonably prudent investor would attach importance thereto in deciding to buy, hold or sell a Bond or, if not disclosed, would significantly alter the total information otherwise available to an investor from the Official Statement, information disclosed hereunder or information generally available to the public. Notwithstanding the foregoing sentence, a material fact is also an event that would be deemed material for purposes of the purchase, holding or sale of a Bond within the meaning of applicable federal securities laws, as interpreted at the time of discovery of the occurrence of the event.

For the purposes of the event identified in (L) hereinabove, the event is considered to occur when any of the following occur: the appointment of a receiver, fiscal agent or similar officer for an obligated person in a proceeding under the U.S. Bankruptcy Code or in any other proceeding under state or federal law in which a court or governmental authority has assumed jurisdiction over substantially all of the assets or business of the obligated person, or if such jurisdiction has been assumed by leaving the existing governmental body and officials or officers in possession but subject to the supervision and orders of a court or governmental authority, or the entry of an order confirming a plan of reorganization, arrangement or liquidation by a court or governmental authority having supervision or jurisdiction over substantially all of the assets or business of the obligated person.

(3) In a timely manner, notice of the occurrence of any of the following events or conditions:

(A) the failure of the City to provide the Disclosure Information required under paragraph (b)(1) at the time specified thereunder;
(B) the amendment or supplementing of this section pursuant to subsection (d), together with a copy of such amendment or supplement and any explanation provided by the City under subsection (d)(2);
(C) the termination of the obligations of the City under this section pursuant to subsection (d);
(D) any change in the accounting principles pursuant to which the financial statements constituting a portion of the Disclosure Information are prepared; and
(E) any change in the fiscal year of the City.

(c) Manner of Disclosure.

(1) The City agrees to make available to the MSRB, in an electronic format as prescribed by the MSRB from time to time, the information described in subsection (b).

(2) All documents provided to the MSRB pursuant to this subsection (c) shall be accompanied by identifying information as prescribed by the MSRB from time to time.

(d) Term; Amendments; Interpretation.

(1) The covenants of the City in this section shall remain in effect so long as any Bonds are outstanding. Notwithstanding the preceding sentence, however, the obligations of the City under this section shall terminate and be without further effect as of any date on which the City delivers to the Registrar an opinion of bond counsel to the effect that, because of legislative action or final judicial or administrative actions or proceedings, the failure of the City to comply with the requirements of this section will not cause participating underwriters in the primary offering of the Bonds to be in violation of the Rule or other applicable requirements of the Securities Exchange Act of 1934, as amended, or any statutes or laws successory thereto or amendatory thereof.

(2) This section (and the form and requirements of the Disclosure Information) may be amended or supplemented by the City from time to time, without notice to (except as provided in paragraph (c)(3) hereof) or the consent of the Owners of any Bonds, by a resolution of this Council filed in the office of the recording officer of the City accompanied by an opinion of bond counsel, who may rely on certificates of the City and others and the opinion may be subject to customary qualifications, to the effect that: (i) such amendment or supplement (a) is made in connection with a change in circumstances that arises from a change in law or regulation or a change in the identity, nature or status of the City or the type of operations conducted by the City, or (b) is required by, or better complies with, the provisions of paragraph (b)(5) of the Rule; (ii) this section as so amended or supplemented would have complied with the requirements of paragraph (b)(5) of the Rule at the time of the primary offering of the Bonds, giving effect to any change in circumstances applicable under clause (i)(a) and assuming that the Rule as in effect and interpreted at the time of the amendment or supplement was in effect at the time of the primary offering; and (iii) such amendment or supplement does not materially impair the interests of the Bondowners under the Rule.

If the Disclosure Information is so amended, the City agrees to provide, contemporaneously with the effectiveness of such amendment, an explanation of the reasons for the amendment and the effect, if any, of the change in the type of financial information or operating data being provided hereunder.

(3) This section is entered into to comply with the continuing disclosure provisions of the Rule and should be construed so as to satisfy the requirements of paragraph (b)(5) of the Rule.

Upon vote being taken upon the foregoing resolution, the following voted in favor thereof:

and the following voted against the same:

whereupon the resolution was declared duly passed and adopted.

EXHIBIT A

FORM OF BONDS

UNITED STATES OF AMERICA
STATE OF MINNESOTA
COUNTY OF CARVER
CITY OF CHASKA

GENERAL OBLIGATION STATE AID STREET BOND,
SERIES 2021A

R-___ $_____

Interest Rate	Maturity Date	Date of Original Issue	CUSIP
____%	April 1, 20___	January 14, 2021	

REGISTERED OWNER:

PRINCIPAL AMOUNT:

THE CITY OF CHASKA, MINNESOTA (the "City"), acknowledges itself to be indebted and for value received hereby promises to pay the principal sum specified above on the maturity date specified above and promises to pay interest thereon from the date of original issue specified above or from the most recent Interest Payment Date (as defined herein) to which interest has been paid or duly provided for, at the annual interest rate specified above, payable on April 1 and October 1 of each year, commencing October 1, 2021 (each such date, an "Interest Payment Date"), all subject to the provisions referred to herein with respect to the redemption of the principal of this Bond before maturity. The interest so payable on any Interest Payment Date shall be paid to the person in whose name this Bond is registered at the close of business on the fifteenth day (whether or not a business day) of the calendar month next preceding such Interest Payment Date. Interest hereon shall be computed on the basis of a 360-day year composed of twelve 30-day months. The interest hereon and, upon presentation and surrender hereof, the principal hereof, are payable in lawful money of the United States of America by check or draft by U.S. Bank National Association, in St. Paul, Minnesota, as bond registrar and paying agent (the "Registrar"), or its designated successor under the Resolution (defined below).

This Bond is one of an issue in the aggregate principal amount of $[PAR] issued pursuant to a resolution adopted by the City Council on December 16, 2020 (the "Resolution"), to refund certain temporary general obligations of the City, which were used to finance the cost of state aid street improvement projects within the City. The Bonds are issuable only in fully registered form, in denominations of $5,000 or any integral multiple thereof, of single maturities.

Bonds maturing in 2031 and later years shall be subject to redemption and prepayment at the option of the City, in whole or in part, in such order of maturity dates as the City may select and, within a maturity, by lot as selected by the Registrar (or, if applicable, by the bond depository in accordance with its customary procedures) in multiples of $5,000, on April 1, 2030, and on any date thereafter, at a price equal to the principal amount thereof and accrued interest to the date of redemption.

[Bonds maturing on April 1, 20__ and 20__ (the "Term Bonds") shall be subject to mandatory redemption prior to maturity pursuant to the sinking fund requirements of the Bond Resolution at a

redemption price equal to the stated principal amount thereof plus interest accrued thereon to the redemption date, without premium. The Registrar shall select for redemption, by lot or other manner deemed fair, on April 1 in each of the following years the following stated principal amounts of such Bonds:

Term Bonds Maturity April 1, 20[__]

Year	Principal Amount

**Stated Maturity*

The City Administrator shall cause notice of the call for redemption thereof to be published if and as required by law, and at least thirty and not more than 60 days prior to the designated redemption date, shall cause notice of call for redemption to be mailed, by first class mail, to the registered holders of any Bonds to be redeemed at their addresses as they appear on the bond register described in the Resolution, but no defect in or failure to give such mailed notice of redemption shall affect the validity of proceedings for the redemption of any Bond not affected by such defect or failure. Official notice of redemption having been given as aforesaid, the Bonds or portions of Bonds so to be redeemed shall, on the redemption date, become due and payable at the redemption price therein specified and from and after such date (unless the City shall default in the payment of the redemption price) such Bonds or portions of Bonds shall cease to bear interest. Upon partial redemption of any Bond, a new Bond or Bonds will be delivered to the owner without charge, representing the remaining principal amount outstanding.

As provided in the Resolution and subject to certain limitations set forth therein, this Bond is transferable upon the books of the City at the principal office of the Registrar, by the registered owner hereof in person or by the owner's attorney duly authorized in writing upon surrender hereof together with a written instrument of transfer satisfactory to the Registrar, duly executed by the registered owner or the owner's attorney, and may also be surrendered in exchange for Bonds of other authorized denominations. Upon such transfer or exchange the City will cause a new Bond or Bonds to be issued in the name of the transferee or registered owner, of the same aggregate principal amount, bearing interest at the same rate and maturing on the same date, subject to reimbursement for any tax, fee or governmental charge required to be paid with respect to such transfer or exchange.

The City and the Registrar may deem and treat the person in whose name this Bond is registered as the absolute owner hereof, whether this Bond is overdue or not, for the purpose of receiving payment and for all other purposes, and neither the City nor the Registrar shall be affected by any notice to the contrary.

The Bonds have been designated as "qualified tax-exempt obligations" pursuant to Section 265(b) of the Internal Revenue Code of 1986, as amended.

Notwithstanding any other provisions of this Bond, so long as this Bond is registered in the name of Cede & Co., as nominee of The Depository Trust Company, or in the name of any other nominee of The Depository Trust Company or other securities depository, the Registrar shall pay all principal of and interest on this Bond, and shall give all notices with respect to this Bond, only to Cede & Co. or other nominee in accordance with the operational arrangements of The Depository Trust Company or other securities depository as agreed to by the City.

IT IS HEREBY CERTIFIED, RECITED, COVENANTED AND AGREED that all acts, conditions and things required by the Constitution and laws of the State of Minnesota to be done, to exist, to happen and to be performed prior to and in the issuance of this Bond in order to make it a valid and binding general

obligation of the City in accordance with its terms, have been done, do exist, have happened and have been performed as so required; that, prior to the issuance hereof, the City Council has by the Resolution irrevocably pledged and appropriated to a separate and special debt service fund to be maintained for the payment of this and other bonds issued under Section 162.18, as long as any of such bonds are outstanding, an amount of the moneys allotted and to be allotted to the City from its account in the municipal state aid street fund of the State of Minnesota sufficient to pay principal of and interest on the Bonds when due, subject to abatement from other sources; that if in any year the moneys so allotted and transferred to the debt service fund should be insufficient to pay all principal of and interest on the Bonds due in such year, the City is obligated to pay such deficiency out of its general fund and to levy a direct, irrepealable ad valorem tax upon all taxable property within its corporate limits for the repayment of such deficiency, which levy may be made without limitation as to rate or amount; and that the issuance of this Bond does not cause the indebtedness of the City to exceed any constitutional or statutory limitation of indebtedness.

This Bond shall not be valid or become obligatory for any purpose or be entitled to any security or benefit under the Resolution until the Certificate of Authentication hereon shall have been executed by the Registrar by manual signature of one of its authorized representatives.

IN WITNESS WHEREOF, the City of Chaska, Minnesota, by its City Council, has caused this Bond to be executed on its behalf by the signatures of the Mayor and City Administrator and has caused this Bond to be dated as of the date set forth below.

CITY OF CHASKA, MINNESOTA

_____	_____
Facsimile signature City Administrator	Facsimile signature Mayor

_____

CERTIFICATE OF AUTHENTICATION

This is one of the Bonds delivered pursuant to the Resolution mentioned within.

U.S. BANK NATIONAL ASSOCIATION, as Registrar

By _____

_____

The following abbreviations, when used in the inscription on the face of this Bond, shall be construed as though they were written out in full according to the applicable laws or regulations:

TEN COM --as tenants in common

UTMA ……. as Custodian for ……..
(Cust) (Minor)

TEN ENT --as tenants by the entireties under Uniform Transfers to Minors Act ....……..
(State)

JT TEN --as joint tenants with right of survivorship and not as tenants in common

Additional abbreviations may also be used.

_____

ASSIGNMENT

For value received, the undersigned hereby sells, assigns and transfers unto _____ the within Bond and all rights thereunder, and does hereby irrevocably constitute and appoint _____ attorney to transfer the said Bond on the books kept for registration of the within Bond, with full power of substitution in the premises.

Dated: _____

_____
NOTICE: The assignor's signature to this assignment must correspond with the name as it appears upon the face of the within Bond in every particular, without alteration or enlargement or any change whatsoever.

Signature Guaranteed:

_____
Signature(s) must be guaranteed by an "eligible guarantor institution" meeting the requirements of the Registrar, which requirements include membership or participation in STAMP or such other "signature guaranty program" as may be determined by the Registrar in addition to or in substitution for STAMP, all in accordance with the Securities Exchange Act of 1934, as amended.

PLEASE INSERT SOCIAL SECURITY OR OTHER IDENTIFYING NUMBER OF ASSIGNEE:

_____

Exhibit B

Notice of Redemption

$20,000,000 General Obligation Temporary State Aid Street Bonds, Series 2019A
March 29, 2019
City of Chaska, Minnesota

NOTICE IS HEREBY GIVEN that the City of Chaska, Minnesota, has called for redemption and prepayment on February 15, 2021 (the "Redemption Date"), the outstanding Bonds of the above-referenced issue (the "Bonds") maturing in the principal amount and having the interest rate listed below:

Amount	Interest Rate
$5,190,000	2.580%

The Bonds will be redeemed at a price of 100% of their principal amount plus accrued interest to the Redemption Date. On the Redemption Date, interest thereon shall cease to accrue. Such redemption price will be payable upon each such bond on the next succeeding business day following the Redemption Date.

A Form W-9, Payer's Request for Taxpayer Identification Number, must be completed and returned with the called Bond or 31% of the redemption proceeds will be withheld. Payment of bonds to be redeemed will be made on and after February 1, 2021, by submitting said Bond along with the completed form W-9 to the City Administrative Services Director at One City Hall Plaza, Chaska, Minnesota 55318.

Pursuant to U.S. federal tax laws, you have a duty to provide the applicable type of tax certification form issued by the U.S. Internal Revenue Service ("IRS") to the City to ensure payments are reported accurately to you and to the IRS. In order to permit accurate withholding (or to prevent withholding), a complete and valid tax certification form must be received by the City before payment of the redemption proceeds is made to you. Failure to timely provide a valid tax certification form as required will result in the maximum amount of U.S. withholding tax being deducted from any redemption payment that is made to you.

Additional information may be obtained from the undersigned or from Baker Tilly Municipal Advisors, LLC 380 Jackson Street, Suite 300, St. Paul, Minnesota (651-223-3000), municipal advisor to the City.

Dated: January 14, 2021

BY ORDER OF THE CITY COUNCIL
CITY OF CHASKA, MINNESOTA

By s/_____
Matt Podhradsky, City Administrator

EXHIBIT C

TERMS OF PROPOSAL

(Attached)

THE CITY HAS AUTHORIZED BAKER TILLY MUNICIPAL ADVISORS, LLC TO NEGOTIATE THIS ISSUE ON ITS BEHALF. PROPOSALS WILL BE RECEIVED ON THE FOLLOWING BASIS:

TERMS OF PROPOSAL

$5,195,000*

CITY OF CHASKA, MINNESOTA

GENERAL OBLIGATION STATE-AID STREET BONDS, SERIES 2021A

(BOOK ENTRY ONLY)

Proposals for the above-referenced obligations (the "Bonds") will be received by the City of Chaska, Minnesota (the "City") on Wednesday, December 16, 2020, (the "Sale Date") until 10:00 A.M., Central Time (the "Sale Time") at the offices of Baker Tilly Municipal Advisors, LLC ("Baker Tilly MA"), 380 Jackson Street, Suite 300, Saint Paul, Minnesota, 55101, after which time proposals will be opened and tabulated. Consideration for award of the Bonds will be by a designated Pricing Committee subsequent to the opening of proposals.

SUBMISSION OF PROPOSALS

Baker Tilly MA will assume no liability for the inability of a bidder or its proposal to reach Baker Tilly MA prior to the Sale Time, and neither the City nor Baker Tilly MA shall be responsible for any failure, misdirection or error in the means of transmission selected by any bidder. All bidders are advised that each proposal shall be deemed to constitute a contract between the bidder and the City to purchase the Bonds regardless of the manner in which the proposal is submitted.

(a) ***Sealed Bidding.*** Completed, signed proposals may be submitted to Baker Tilly MA by email to bondservice@bakertilly.com or by fax (651) 223-3046, and must be received prior to the Sale Time.

OR

(b) ***Electronic Bidding.*** Proposals may also be received via PARITY®. For purposes of the electronic bidding process, the time as maintained by PARITY® shall constitute the official time with respect to all proposals submitted to PARITY®. *Each bidder shall be solely responsible for making necessary arrangements to access PARITY® for purposes of submitting its electronic proposal in a timely manner and in compliance with the requirements of the Terms of Proposal*. Neither the City, its agents, nor PARITY® shall have any duty or obligation to undertake registration to bid for any prospective bidder or to provide or ensure electronic access to any qualified prospective bidder, and neither the City, its agents, nor PARITY® shall be responsible for a bidder's failure to register to bid or for any failure in the proper operation of, or have any liability for any delays or interruptions of or any damages caused by the services of PARITY®. The City is using the services of PARITY® solely as a communication mechanism to conduct the electronic bidding for the Bonds, and PARITY® is not an agent of the City.

If any provisions of this Terms of Proposal conflict with information provided by PARITY®, this Terms of Proposal shall control. Further information about PARITY®, including any fee charged, may be obtained from:

PARITY®, 1359 Broadway, 2nd Floor, New York, New York 10018
Customer Support: (212) 849-5000

* *Preliminary; subject to change.*

Baker Tilly Municipal Advisors, LLC is a registered municipal advisor and controlled subsidiary of Baker Tilly US, LLP, an accounting firm. Baker Tilly US, LLP trading as Baker Tilly is a member of the global network of Baker Tilly International Ltd., the members of which are separate and independent legal entities. ©2020 Baker Tilly Municipal Advisors, LLC

DETAILS OF THE BONDS

The Bonds will be dated as of the date of delivery and will bear interest payable on April 1 and October 1 of each year, commencing October 1, 2021. Interest will be computed on the basis of a 360-day year of twelve 30-day months.

The Bonds will mature April 1 in the years and amounts* as follows:

2022	$200,000	2027	$240,000	2032	$265,000	2037	$285,000
2023	$225,000	2028	$245,000	2033	$265,000	2038	$290,000
2024	$225,000	2029	$250,000	2034	$270,000	2039	$295,000
2025	$230,000	2030	$255,000	2035	$275,000	2040	$300,000
2026	$235,000	2031	$260,000	2036	$280,000	2041	$305,000

* *The City reserves the right, after proposals are opened and prior to award, to increase or reduce the principal amount of the Bonds or the amount of any maturity or maturities in multiples of $5,000. In the event the amount of any maturity is modified, the aggregate purchase price will be adjusted to result in the same gross spread per $1,000 of Bonds as that of the original proposal. Gross spread for this purpose is the differential between the price paid to the City for the new issue and the prices at which the proposal indicates the securities will be initially offered to the investing public.*

Proposals for the Bonds may contain a maturity schedule providing for a combination of serial bonds and term bonds. All term bonds shall be subject to mandatory sinking fund redemption at a price of par plus accrued interest to the date of redemption scheduled to conform to the maturity schedule set forth above. In order to designate term bonds, the proposal must specify "Years of Term Maturities" in the spaces provided on the proposal form.

BOOK ENTRY SYSTEM

The Bonds will be issued by means of a book entry system with no physical distribution of Bonds made to the public. The Bonds will be issued in fully registered form and one Bond, representing the aggregate principal amount of the Bonds maturing in each year, will be registered in the name of Cede & Co. as nominee of The Depository Trust Company ("DTC"), New York, New York, which will act as securities depository for the Bonds. Individual purchases of the Bonds may be made in the principal amount of $5,000 or any multiple thereof of a single maturity through book entries made on the books and records of DTC and its participants. Principal and interest are payable by the registrar to DTC or its nominee as registered owner of the Bonds. Transfer of principal and interest payments to participants of DTC will be the responsibility of DTC; transfer of principal and interest payments to beneficial owners by participants will be the responsibility of such participants and other nominees of beneficial owners. The lowest bidder (the "Purchaser"), as a condition of delivery of the Bonds, will be required to deposit the Bonds with DTC.

REGISTRAR

The City will name the registrar which shall be subject to applicable regulations of the Securities and Exchange Commission. The City will pay for the services of the registrar.

OPTIONAL REDEMPTION

The City may elect on April 1, 2030, and on any day thereafter, to redeem Bonds due on or after April 1, 2031. Redemption may be in whole or in part and if in part at the option of the City and in such manner as the City shall determine. If less than all Bonds of a maturity are called for redemption, the City will notify DTC of the particular amount of such maturity to be redeemed. DTC will determine by lot the amount of each participant's interest in such maturity to be redeemed and each participant will then select by lot the beneficial ownership interests in such maturity to be redeemed. All redemptions shall be at a price of par plus accrued interest.

SECURITY AND PURPOSE

The Bonds will be general obligations of the City for which the City will pledge its full faith and credit and power to levy direct general ad valorem taxes. In addition, the City will pledge annual state-aid allotments from the Minnesota Department of Transportationfor repayment of the Bonds. The proceeds of the Bonds will be used to redeem a portion of the City's General Obligation Temporary State Aid Street Bonds, Series 2019A, dated March 29, 2019.

BANK QUALIFIED TAX-EXEMPT OBLIGATIONS

The City will designate the Bonds as qualified tax-exempt obligations for purposes of Section 265(b)(3) of the Internal Revenue Code of 1986, as amended.

BIDDING PARAMETERS

Proposals shall be for not less than $5,298,900 plus accrued interest, if any, on the total principal amount of the Bonds. No proposal can be withdrawn or amended after the time set for receiving proposals unless award of the Bonds is not made by the Pricing Committee following the opening of proposals, as designated by the City pursuant to a resolution adopted on December 7, 2020. Rates shall be in integral multiples of 1/100 or 1/8 of 1%. The initial price to the public for each maturity as stated on the proposal must be 98.0% or greater. Bonds of the same maturity shall bear a single rate from the date of the Bonds to the date of maturity. No conditional proposals will be accepted.

ESTABLISHMENT OF ISSUE PRICE

In order to establish the issue price of the Bonds for federal income tax purposes, the City requires bidders to agree to the following, and by submitting a proposal, each bidder agrees to the following.

If a proposal is submitted by a potential underwriter, the bidder confirms that (i) the underwriters have offered or reasonably expect to offer the Bonds to the public on or before the date of the award at the offering price (the "initial offering price") for each maturity as set forth in the proposal and (ii) the bidder, if it is the winning bidder, shall require any agreement among underwriters, selling group agreement, third-party distribution agreement or other agreement relating to the initial sale of the Bonds to the public to which it is a party to include provisions requiring compliance by all parties to such agreements with the provisions contained herein. For purposes hereof, Bonds with a separate CUSIP number constitute a separate "maturity," and "the public" does not include underwriters of the Bonds (including members of a selling group or retail distribution group) or persons related to underwriters of the Bonds.

If, however, a proposal is submitted for the bidder's own account in a capacity other than as an underwriter of the Bonds, and the bidder has no current intention to sell, reoffer, or otherwise dispose of the Bonds, the bidder shall notify the District to that effect at the time it submits its proposal and shall provide a certificate to that effect in place of the certificate otherwise required below.

If the winning bidder intends to act as an underwriter, the City shall advise the winning bidder at or prior to the time of award whether (i) the competitive sale rule or (ii) the "hold-the-offering price" rule applies.

<u>If the City advises the Purchaser that the requirements for a competitive sale have been satisfied and that the competitive sale rule applies</u>, the Purchaser will be required to deliver to the City at or prior to closing a certification, substantially in the form attached hereto as Exhibit A, as to the reasonably expected initial offering price as of the award date.

<u>If the City advises the Purchaser that the requirements for a competitive sale have not been satisfied, the hold-the-offering price rule will apply.</u> The Purchaser shall (1) upon the request of the City confirm that the underwriters did not offer or sell any maturity of the Bonds to any person at a price higher than the initial offering price of that maturity during the period starting on the award date and ending on the earlier of (a) the close of the fifth business day after the sale date or (b) the date on which the underwriters have

sold at least 10% of that maturity to the public at or below the initial offering price; and (2) at or prior to closing, deliver to the City a certification substantially in the form attached hereto as Exhibit B, together with a copy of the pricing wire.

Any action to be taken or documentation to be received by the City pursuant hereto may be taken or received on behalf of the City by Baker Tilly MA.

Bidders should prepare their proposals on the assumption that the Bonds will be subject to the "hold-the-offering-price" rule. Any proposal submitted pursuant to the Terms of Proposal shall be considered a firm offer for the purchase of the Bonds, and proposals submitted will not be subject to cancellation or withdrawal.

GOOD FAITH DEPOSIT

To have its proposal considered for award, the Purchaser is required to submit a good faith deposit via wire transfer to the City in the amount of $51,950 (the "Deposit") no later than 1:00 P.M., Central Time on the Sale Date. The Purchaser shall be solely responsible for the timely delivery of its Deposit, and neither the City nor Baker Tilly MA have any liability for delays in the receipt of the Deposit. If the Deposit is not received by the specified time, the City may, at its sole discretion, reject the proposal of the lowest bidder, direct the second lowest bidder to submit a Deposit, and thereafter award the sale to such bidder.

A Deposit will be considered timely delivered to the City upon submission of a federal wire reference number by the specified time. Wire transfer instructions will be available from Baker Tilly MA following the receipt and tabulation of proposals. The successful bidder must send an e-mail including the following information: (i) the federal reference number and time released; (ii) the amount of the wire transfer; and (iii) the issue to which it applies.

Once an award has been made, the Deposit received from the Purchaser will be retained by the City and no interest will accrue to the Purchaser. The amount of the Deposit will be deducted at settlement from the purchase price. In the event the Purchaser fails to comply with the accepted proposal, said amount will be retained by the City.

AWARD

The Bonds will be awarded on the basis of the lowest interest rate to be determined on a true interest cost (TIC) basis calculated on the proposal prior to any adjustment made by the City. The City's computation of the interest rate of each proposal, in accordance with customary practice, will be controlling.

The City will reserve the right to: (i) waive non-substantive informalities of any proposal or of matters relating to the receipt of proposals and award of the Bonds, (ii) reject all proposals without cause, and (iii) reject any proposal that the City determines to have failed to comply with the terms herein.

BOND INSURANCE AT PURCHASER'S OPTION

The City has **not** applied for or pre-approved a commitment for any policy of municipal bond insurance with respect to the Bonds. If the Bonds qualify for municipal bond insurance and a bidder desires to purchase a policy, such indication, the maturities to be insured, and the name of the desired insurer must be set forth on the bidder's proposal. The City specifically reserves the right to reject any proposal specifying municipal bond insurance, even though such proposal may result in the lowest TIC to the City. All costs associated with the issuance and administration of such policy and associated ratings and expenses (other than any independent rating requested by the City) shall be paid by the successful bidder. Failure of the municipal bond insurer to issue the policy after the award of the Bonds shall not constitute cause for failure or refusal by the successful bidder to accept delivery of the Bonds.

CUSIP NUMBERS

If the Bonds qualify for the assignment of CUSIP numbers such numbers will be printed on the Bonds; however, neither the failure to print such numbers on any Bond nor any error with respect thereto will constitute cause for failure or refusal by the Purchaser to accept delivery of the Bonds. Baker Tilly MA will apply for CUSIP numbers pursuant to Rule G-34 implemented by the Municipal Securities Rulemaking Board. The CUSIP Service Bureau charge for the assignment of CUSIP identification numbers shall be paid by the Purchaser.

SETTLEMENT

On or about January 14, 2021, the Bonds will be delivered without cost to the Purchaser through DTC in New York, New York. Delivery will be subject to receipt by the Purchaser of an approving legal opinion of Dorsey & Whitney LLP of Minneapolis, Minnesota, and of customary closing papers, including a no-litigation certificate. On the date of settlement, payment for the Bonds shall be made in federal, or equivalent, funds that shall be received at the offices of the City or its designee not later than 12:00 Noon, Central Time. Unless compliance with the terms of payment for the Bonds has been made impossible by action of the City, or its agents, the Purchaser shall be liable to the City for any loss suffered by the City by reason of the Purchaser's non-compliance with said terms for payment.

CONTINUING DISCLOSURE

In accordance with SEC Rule 15c2-12(b)(5), the City will undertake, pursuant to the resolution awarding sale of the Bonds, to provide annual reports and notices of certain events. A description of this undertaking is set forth in the Official Statement. The Purchaser's obligation to purchase the Bonds will be conditioned upon receiving evidence of this undertaking at or prior to delivery of the Bonds.

OFFICIAL STATEMENT

The City has authorized the preparation of a Preliminary Official Statement containing pertinent information relative to the Bonds, and said Preliminary Official Statement has been deemed final by the City as of the date thereof within the meaning of Rule 15c2-12 of the Securities and Exchange Commission. For an electronic copy of the Preliminary Official Statement or for any additional information prior to sale, any prospective purchaser is referred to the Municipal Advisor to the City, Baker Tilly Municipal Advisors, LLC, by telephone (651) 223-3000, or by email bondservice@bakertilly.com. The Preliminary Official Statement will also be made available at https://connect.bakertilly.com/bond-sales-calendar.

A Final Official Statement (as that term is defined in Rule 15c2-12) will be prepared, specifying the maturity dates, principal amounts, and interest rates of the Bonds, together with any other information required by law. By awarding the Bonds to the Purchaser, the City agrees that, no more than seven business days after the date of such award, it shall provide to the Purchaser an electronic copy of the Final Official Statement. The City designates the Purchaser as its agent for purposes of distributing the Final Official Statement to each syndicate member, if applicable. The Purchaser agrees that if its proposal is accepted by the City, (i) it shall accept designation and (ii) it shall enter into a contractual relationship with its syndicate members for purposes of assuring the receipt of the Final Official Statement by each such syndicate member.

Dated December 7, 2020

BY ORDER OF THE CITY COUNCIL

/s/ Matthew Podhradsky
City Administrator

EXHIBIT A

ISSUE PRICE CERTIFICATE – COMPETITIVE SALES WITH AT LEAST THREE BIDS FROM ESTABLISHED UNDERWRITERS

$[PRINCIPAL AMOUNT]
[BOND CAPTION]

ISSUE PRICE CERTIFICATE

The undersigned, on behalf of [NAME OF UNDERWRITER] ("[SHORT NAME OF UNDERWRITER]"), hereby certifies as set forth below with respect to the sale of the obligations named above (the "Bonds").

1. ***Reasonably Expected Initial Offering Price***.

(a) As of the Sale Date, the reasonably expected initial offering prices of the Bonds to the Public by [SHORT NAME OF UNDERWRITER] are the prices listed in Schedule A (the "Expected Offering Prices"). The Expected Offering Prices are the prices for the Maturities of the Bonds used by [SHORT NAME OF UNDERWRITER] in formulating its bid to purchase the Bonds. Attached as Schedule B is a true and correct copy of the bid provided by [SHORT NAME OF UNDERWRITER] to purchase the Bonds.

(b) [SHORT NAME OF UNDERWRITER] was not given the opportunity to review other bids prior to submitting its bid.

(c) The bid submitted by [SHORT NAME OF UNDERWRITER] constituted a firm offer to purchase the Bonds.

2. ***Defined Terms***. For purposes of this Issue Price Certificate:

(a) *City* means [DESCRIBE ISSUER].

(b) *Maturity* means Bonds with the same credit and payment terms. Any Bonds with different maturity dates, or with the same maturity date but different stated interest rates, are treated as separate Maturities.

(c) *Member of the Distribution Group* means (i) any person that agrees pursuant to a written contract with the City (or with the lead underwriter to form an underwriting syndicate) to participate in the initial sale of the Bonds to the Public, and (ii) any person that agrees pursuant to a written contract directly or indirectly with a person described in clause (i) of this paragraph to participate in the initial sale of the Bonds to the Public (including a member of a selling group or a party to a retail distribution agreement participating in the initial sale of the Bonds to the Public).

(d) *Public* means any person (*i.e.*, an individual, trust, estate, partnership, association, company, or corporation) other than a Member of the Distribution Group or a related party to a Member of the Distribution Group. A person is a "related party" to a Member of the Distribution Group if the Member of the Distribution Group and that person are subject, directly or indirectly, to (i) at least 50% common ownership of the voting power or the total value of their stock, if both entities are corporations (including direct ownership by one corporation of another), (ii) more than 50% common ownership of their capital interests or profits interests, if both entities are partnerships (including direct ownership by one partnership of another), or (iii) more than 50% common ownership of the value of the outstanding stock of the corporation or the capital interests or profit interests of the partnership, as applicable, if one entity is a

corporation and the other entity is a partnership (including direct ownership of the applicable stock or interests by one entity of the other).

(e) *Sale Date* means the first day on which there is a binding contract in writing for the sale of the respective Maturity. The Sale Date of each Maturity was [DATE].

The representations set forth in this certificate are limited to factual matters only. Nothing in this certificate represents [SHORT NAME OF UNDERWRITER]'s interpretation of any laws, including specifically Sections 103 and 148 of the Internal Revenue Code of 1986, as amended, and the Treasury Regulations thereunder. The undersigned understands that the foregoing information will be relied upon by the City[and BORROWER (the "Borrower")] with respect to certain of the representations set forth in the [Tax Certificate][Tax Exemption Agreement] and with respect to compliance with the federal income tax rules affecting the Bonds, and by [BOND COUNSEL] in connection with rendering its opinion that the interest on the Bonds is excluded from gross income for federal income tax purposes, the preparation of the Internal Revenue Service Form 8038[-G][-GC][-TC], and other federal income tax advice that it may give to the City[and the Borrower] from time to time relating to the Bonds.

[UNDERWRITER]

By:_____

Name:_____

Dated: [ISSUE DATE]

SCHEDULE A

EXPECTED OFFERING PRICES

(*Attached*)

SCHEDULE B

COPY OF UNDERWRITER'S BID

(*Attached*)

EXHIBIT B

ISSUE PRICE CERTIFICATE – COMPETITIVE SALES WITH FEWER THAN THREE BIDS FROM ESTABLISHED UNDERWRITERS

$[PRINCIPAL AMOUNT]
[BOND CAPTION]

ISSUE PRICE CERTIFICATE

The undersigned, on behalf of [NAME OF UNDERWRITER/REPRESENTATIVE] (["[SHORT NAME OF UNDERWRITER]")][the "Representative")][, on behalf of itself and [NAMES OF OTHER UNDERWRITERS] (together, the "Underwriting Group"),] hereby certifies as set forth below with respect to the sale of the obligations named above (the "Bonds").

1. ***Initial Offering Price of the Bonds***. [SHORT NAME OF UNDERWRITER][The Underwriting Group] offered the Bonds to the Public for purchase at the specified initial offering prices listed in Schedule A (the "Initial Offering Prices") on or before the Sale Date. A copy of the pricing wire for the Bonds is attached to this certificate as Schedule B.

2. ***First Price at which Sold to the Public.*** On the Sale Date, at least 10% of each Maturity [listed in Schedule C] was first sold to the Public at the respective Initial Offering Price [or price specified [therein][in Schedule C], if different].

3. ***Hold the Offering Price Rule***. [SHORT NAME OF UNDERWRITER][Each member of the Underwriting Group] has agreed in writing that, (i) for each Maturity less than 10% of which was first sold to the Public at a single price as of the Sale Date, it would neither offer nor sell any of the Bonds of such Maturity to any person at a price that is higher than the Initial Offering Price for such Maturity during the Holding Period for such Maturity (the "Hold-the-Offering-Price Rule"), and (ii) any agreement among underwriters, selling group agreement, or third-party distribution agreement contains the agreement of each underwriter, dealer, or broker-dealer who is a party to such agreement to comply with the Hold-the-Offering-Price Rule. Based on the [Representative][SHORT NAME OF UNDERWRITER]'s own knowledge and, in the case of sales by other Members of the Distribution Group, representations obtained from the other Members of the Distribution Group, no Member of the Distribution Group has offered or sold any such Maturity at a price that is higher than the respective Initial Offering Price during the respective Holding Period.

4. ***Defined Terms***. For purposes of this Issue Price Certificate:

(a) *Holding Period* means the period starting on the Sale Date and ending on the earlier of (i) the close of the fifth business day after the Sale Date ([DATE]), or (ii) the date on which Members of the Distribution Group have sold at least 10% of such Maturity to the Public at one or more prices, none of which is higher than the Initial Offering Price for such Maturity.

(b) *City* means [DESCRIBE ISSUER].

(c) *Maturity* means Bonds with the same credit and payment terms. Any Bonds with different maturity dates, or with the same maturity date but different stated interest rates, are treated as separate Maturities.

(d) *Member of the Distribution Group* means (i) any person that agrees pursuant to a written contract with the City (or with the lead underwriter to form an underwriting syndicate) to participate in the initial sale of the Bonds to the Public, and (ii) any person that agrees pursuant to a written contract directly or indirectly with a person described in clause (i) of this paragraph to participate in the initial sale of the Bonds to the Public (including a member of a selling group or a party to a retail distribution agreement participating in the initial sale of the Bonds to the Public).

(e) *Public* means any person (*i.e.*, an individual, trust, estate, partnership, association, company, or corporation) other than a Member of the Distribution Group or a related party to a Member of the Distribution Group. A person is a "related party" to a Member of the Distribution Group if the Member of the Distribution Group and that person are subject, directly or indirectly, to (i) at least 50% common ownership of the voting power or the total value of their stock, if both entities are corporations (including direct ownership by one corporation of another), (ii) more than 50% common ownership of their capital interests or profits interests, if both entities are partnerships (including direct ownership by one partnership of another), or (iii) more than 50% common ownership of the value of the outstanding stock of the corporation or the capital interests or profit interests of the partnership, as applicable, if one entity is a corporation and the other entity is a partnership (including direct ownership of the applicable stock or interests by one entity of the other).

(f) *Sale Date* means the first day on which there is a binding contract in writing for the sale of the respective Maturity. The Sale Date of each Maturity was [DATE].

The representations set forth in this certificate are limited to factual matters only. Nothing in this certificate represents [NAME OF UNDEWRITING FIRM][the Representative's] interpretation of any laws, including specifically Sections 103 and 148 of the Internal Revenue Code of 1986, as amended, and the Treasury Regulations thereunder. The undersigned understands that the foregoing information will be relied upon by the City[and BORROWER (the "Borrower")] with respect to certain of the representations set forth in the [Tax Certificate][Tax Exemption Agreement] and with respect to compliance with the federal income tax rules affecting the Bonds, and by [BOND COUNSEL] in connection with rendering its opinion that the interest on the Bonds is excluded from gross income for federal income tax purposes, the preparation of the Internal Revenue Service Form 8038[-G][-GC][-TC], and other federal income tax advice that it may give to the City[and the Borrower] from time to time relating to the Bonds.

[UNDERWRITER][REPRESENTATIVE]

By:_____

Name:_____

Dated: [ISSUE DATE]

SCHEDULE A

INITIAL OFFERING PRICES OF THE BONDS

(*Attached*)

SCHEDULE B

PRICING WIRE

(*Attached*)

SCHEDULE C

SALES OF AT LEAST 10% OF MATURITY TO THE PUBLIC ON THE SALE DATE AT THE INITIAL OFFERING PRICE

(*Attached*)

COUNTY AUDITOR'S CERTIFICATE

AS TO REGISTRATION AND TAX LEVY

The undersigned, being the duly qualified and acting County Auditor of Carver County, Minnesota, hereby certifies that there has been filed in my office a certified copy of a resolution duly adopted on December 16, 2020, by the City Council of the City of Chaska, Minnesota, setting forth the form and details of an issue of General Obligation State Aid Street Bonds, Series 2021A, dated as of the date of issuance thereof.

I further certify that the issue has been entered on my bond register, as required by Minnesota Statutes, Sections 475.62 to 475.63.

WITNESS my hand and official seal this ___ day of January, 2021.

_____

County Auditor

(SEAL)

City of Chaska, Minnesota

Pre-Sale Summary for Issuance of Bonds

$2,250,000 Electric Utility Revenue Refunding Bonds, Series 2020F

The City Council has under consideration the issuance of bonds to refund the outstanding maturities of the City's Electric Utility Revenue Bonds, Series 2011D (the "Series 2011D Bonds") for interest cost savings. . This document provides information relative to the proposed issuance.

KEY EVENTS: The following summary schedule includes the timing of some of the key events that will occur relative to the bond issuance:

November 16, 2020	Council sets sale date and terms
Week of November 23, 2020	Rating conference is conducted
December 7, 2020, 11:00 a.m.	Competitive [proposals/bids] are received
December 7, 2020, 7:00 p.m.	Council considers award of the Bonds
December 29, 2020	Proceeds are received
February 1, 2021	Redeem Series 2011D Bonds

RATING: The City's previous electric utility debt was rated by Moody's Investors Service (Moody's); however, since the City's general obligation and lease revenue debt is currently rated by S&P Global Ratings (S&P), the City will seek a rating from S&P for the Bonds. The City's electric utility debt is currently rated "A1" by Moody's. It is anticipated that S&P will rate the Bonds in the "A" category.

THE MARKET: Performance of the tax-exempt market is often measured by the Bond Buyer's Index ("BBI") which measures the yield of high grade municipal bonds in the 20th year for general obligation bonds rated Aa2 by Moody's or AA by S&P (the BBI 20-Bond GO Index) and the 30th year for revenue bonds rated A1 by Moody's or A+ by S&P (the BBI 25-Bond Revenue Index). The following chart illustrates these two indices over the past five years:

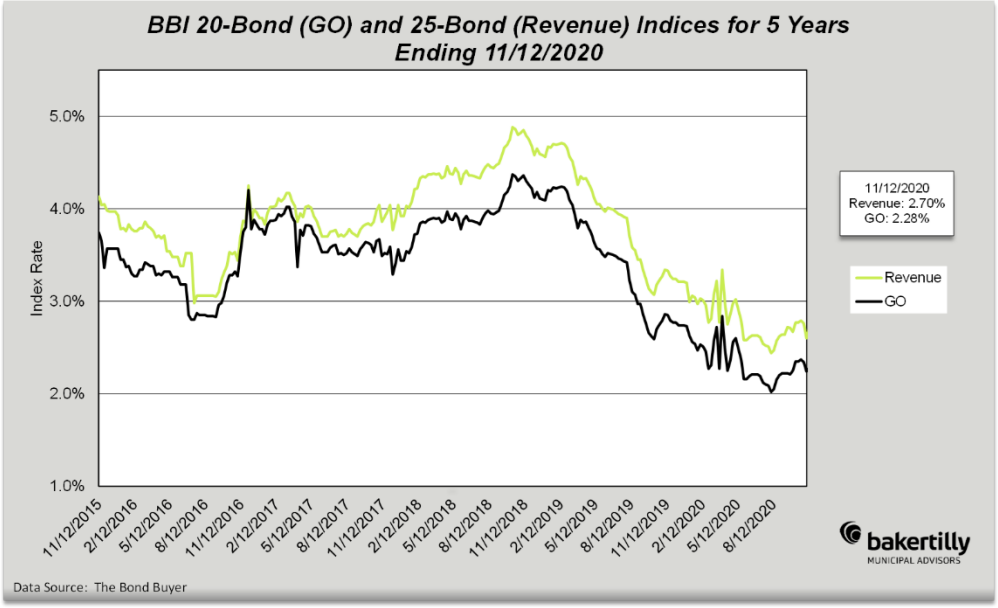

Study No.: 3414 .103_1418269
Date: November 13, 2020

PURPOSE: Proceeds of the Bonds and debt service reserve funds of the Series 2011D Bonds will be used to (i) refund the October 1, 2021 through 2031 maturities of the City's Electric Utility Revenue Bonds, Series 2011D, dated December 22, 2011; (ii) fund the new reserve requirement and (iii) pay the costs of issuance. The refunding maturities are outstanding in the principal amount of $2,160,000 This refunding transaction is being conducted as a current refunding in which the Series 2011D Bonds will be called within 90 days of settlement of the Bonds, and is being undertaken to provide interest cost savings to the City.

Proceeds of the Series 2011D Bonds were used to finance improvements to the City's electric utility (the "Electric Utility"), including but not limited to the acquisition and installation of an electric utility substation at West Creek and improvements to the existing Minnesota River and Bluff Creek substations (collectively, the "Project").

AUTHORITY: Statutory Authority: The Bonds are being issued pursuant to Minnesota Statutes Chapters 453 and 475, as amended and a resolution to be adopted by the City on December 7, 2020 (the "Resolution").

Existing Covenants/Policies:

Existing covenants and requirements originally established pursuant to the resolution for the Series 2011D Bonds include but are not limited to (i) requirements and condition to issue additional bonds ("Additional Bonds"); (ii) establishment of certain accounts, including a debt service reserve account; (iii) covenants regarding the operation of the Electric Utility.

The City has one outstanding bond issue, its $7,220,000 Electric Utility Revenue Bonds, Series 2017A, dated September 6, 2017 (the "Series 2017A Bonds"), secured and payable from the net revenues of the City's Electric Utility on a parity with the Bonds.

Additionally, the City has outstanding its $21,760,000 Electric Revenue Refunding Bonds (Generating Facilities), Series 2015A (the "Series 2015A Bonds"). The Series 2015A Bonds were issued to refund two prior issues that were issued to finance the costs of a gas turbine electric generating facility in the City which are not a part of the Electric Utility. The Series 2015A Bonds were issued under a separate trust agreement and secured by the revenues of the Turbine Fund and agreements with the Minnesota Municipal Power Agency.

Additional Bonds: the City may issue Additional Bonds on a parity and equality to lien of the Net Revenues of the Electric Utility if the annual Net Revenues of the Electric Utility for each of the last two complete fiscal years preceding the issuance of such additional bonds have equaled at least 120% of the average annual principal and interest payable from the on all Bonds then outstanding (other than any Bonds to be refunded by the Additional Bonds) and on the Additional Bonds proposed to be issued.

Based on 2018 and 2019 net revenues of the Electric Utility of $4,100,452 and $7,507,012, respectively, and projected average annual debt service for the Bonds and the Series 2017A Bonds of $636,471, the Additional Bond requirement is met. This calculation is shown on page 9.

Debt Service Reserve Account: a debt service reserve account will be established and maintained at the Debt Service Reserve Requirement which is defined as the lesser of (i) 10% of the principal amount of the outstanding Bonds (or, if less, 10% of the issue price of the bonds net of any pre-issuance accrued interest); (ii) the maximum amount of principal and interest to become due in any future bond year on the Bonds; or (iii) 125% of the average

annual principal and interest to become due on any future bond year on the Bonds. Upon the issuance of the Bonds, the Debt Service Reserve Requirement is calculated to be $223,410. The Series 2011D Bonds originally funded the Debt Service Reserve Requirement in the amount of $244,299.25. The difference of $20,889.25 is applied to sizing of the Bonds. The actual Debt Service Reserve Requirement will be determined based on the final pricing of the Bonds.

Rate Covenant: The City will be required to annually review its budget for the Electric Utility to determine if current rates and charges are sufficient to produce in in each fiscal year net revenues not less than 120% of the amount of principal and interest payable in each fiscal year and to adjust such rates and charges as necessary to meet operational expenditures and debt service coverage requirements.

SECURITY AND SOURCE OF PAYMENT:

The Bonds are special limited obligation of the City payable solely from revenues of the City's Electric Utility. The Bonds are being issued on a parity of lien with the City's Series 2017A Bonds. The Bonds and Series 2017A Bonds are equally secured by the pledge of the Net Revenues of the Electric Utility which will be sufficient to pay the debt service payments on the Bonds as they become due.

On February 1, 2021 (the redemption date of the Series 2011D Bonds), the City will use proceeds of the Bonds to redeem the outstanding principal of the Series 2011D Bonds in the amount of $2,160,000 plus accrued interest of $28,320.83.

STRUCTURING SUMMARY:

In consultation with the City, the Bonds have been structured with the same repayment term of as the Series 2011D Bonds to result in approximately level annual savings.

Based on current interest rate estimates, this refunding transaction is estimated to result in average annual debt service savings of approximately $19,604. This results in future value savings of approximately $196,688, and net present value benefit of approximately $186,401. These estimates are net of all costs associated with the refunding.

SCHEDULES ATTACHED:

Schedules * attached for the Bonds include:

- Sources and Uses
- Debt Service Comparison
- Debt Service
- Debt Service to Maturity and to Call for the Series 2011D Bonds
- Aggregate Debt Service Coverage and Additional Bonds Calculation
- Proof of Debt Service Reserve Fund

**The schedules are estimates based on the current interest rate environment*

RISKS/SPECIAL CONSIDERATIONS:

The outcome of this financing will rely on market conditions at the time of the sale. Any projections including refunding savings are estimates based on current market conditions.

SALE TERMS AND MARKETING:

Variability of Issue Size: A specific provision in the sale terms permits modifications to the issue size and/or maturity structure to customize the issue once the price and interest rates are set on the day of sale.

Prepayment Provisions: The Bonds will not be subject to redemption prior to their stated maturities.

Bank Qualification: The City does not expect to issue more than $10 million in tax-exempt obligations that count against the $10 million limit for this calendar year; therefore, the Bonds are designated as bank qualified.

Post Issuance Compliance

POST ISSUANCE COMPLIANCE:

The issuance of the Bonds will result in post-issuance compliance responsibilities. The responsibilities are in two primary areas: (i) compliance with federal arbitrage requirements and (ii) compliance with secondary disclosure requirements.

Federal arbitrage requirements include a wide range of implications that have been taken into account as this issue has been structured. Post-issuance compliance responsibilities for this tax-exempt issue include both rebate and yield restriction provisions of the IRS Code. In general terms the arbitrage requirements control the earnings on unexpended bond proceeds, including investment earnings, moneys held for debt service payments (which are considered to be proceeds under the IRS regulations), and/or reserves. Under certain circumstances any "excess earnings" will need to be paid to the IRS to maintain the tax-exempt status of the Bonds. Any interest earnings on gross bond proceeds or debt service funds should not be spent until it has been determined based on actual facts that they are not "excess earnings" as defined by the IRS Code.

The arbitrage rules provide for spend-down exceptions for proceeds that are spent within either a 6-month, 18-month or, for certain construction issues, a 24-month period each in accordance with certain spending criteria. Proceeds that qualify for an exception will be exempt from rebate. These exceptions are based on actual expenditures and not based on reasonable expectations, and expenditures, including any investment proceeds will have to meet the spending criteria to qualify for the exclusion. The City expects to meet the 6-month spending exception.

Regardless of whether the issue qualifies for an exemption from the rebate provisions, yield restriction provisions will apply to Bond proceeds (including interest earnings) unspent after three years and the debt service fund throughout the term of the Bonds. These moneys should be monitored until the Bonds are retired.

Secondary disclosure requirements result from an SEC requirement that underwriters provide ongoing disclosure information to investors. To meet this requirement, any prospective underwriter will require the City to commit to providing the information needed to comply under a continuing disclosure agreement.

Baker Tilly and the City have entered into an Agreement for Municipal Advisor Services under which Baker Tilly will provide continuing disclosure and arbitrage rebate services on the Bonds.

SUPPLEMENTAL INFORMATION AND BOND RECORD:

Supplementary information will be available to staff including detailed terms and conditions of sale, comprehensive structuring schedules and information to assist in meeting post-issuance compliance responsibilities.

Upon completion of the financing, a bond record will be provided that contains pertinent documents and final debt service calculations for the transaction.

Baker Tilly Municipal Advisors, LLC is a registered municipal advisor and wholly-owned subsidiary of Baker Tilly US, LLP, an accounting firm. Baker Tilly US, LLP trading as Baker Tilly, is a member of the global network of Baker Tilly International Ltd., the members of which are separate and independent legal entities. © 2020 Baker Tilly Municipal Advisors, LLC.

$2,250,000

City of Chaska, Minnesota

Electric Utility Revenue Refunding Bonds, Series 2020F

Current Refunding of 2011D Bonds

Sources & Uses

Dated 12/29/2020 | Delivered 12/29/2020

Sources Of Funds	
Par Amount of Bonds	$2,250,000.00
Transfers from Prior Issue DSR Funds	244,299.25
Total Sources	**$2,494,299.25**
Uses Of Funds	
Deposit to Current Refunding Fund	2,182,514.36
Deposit to Debt Service Reserve Fund (DSRF)	223,410.00
Costs of Issuance	55,500.00
Total Underwriter's Discount (1.400%)	31,500.00
Rounding Amount	1,374.89
Total Uses	**$2,494,299.25**

File | Chaska.sf | 2021 Ref 2011D Elec Util | SINGLE PURPOSE | 11/11/2020 | 9:30 AM

bakertilly MUNICIPAL ADVISORS

$2,250,000

City of Chaska, Minnesota

Electric Utility Revenue Refunding Bonds, Series 2020F

Current Refunding of 2011D Bonds

Debt Service Comparison

Date	Total P+I	DSR	Net New D/S	Old Net D/S	Savings
10/01/2021	211,193.44	-	211,193.44	232,970.00	21,776.56
10/01/2022	215,496.50	-	215,496.50	234,010.00	18,513.50
10/01/2023	219,482.50	-	219,482.50	239,590.00	20,107.50
10/01/2024	218,342.50	-	218,342.50	239,640.00	21,297.50
10/01/2025	217,042.50	-	217,042.50	234,460.00	17,417.50
10/01/2026	215,522.50	-	215,522.50	233,910.00	18,387.50
10/01/2027	218,722.50	-	218,722.50	237,830.00	19,107.50
10/01/2028	221,672.50	-	221,672.50	241,230.00	19,557.50
10/01/2029	219,257.50	-	219,257.50	239,090.00	19,832.50
10/01/2030	221,527.50	-	221,527.50	241,565.00	20,037.50
10/01/2031	223,410.00	(223,410.00)	-	(721.75)	(721.75)
Total	$2,401,669.94	(223,410.00)	$2,178,259.94	$2,373,573.25	$195,313.31

PV Analysis Summary (Net to Net)	19,603.51
Net FV Cashflow Savings	195,313.31
Gross PV Debt Service Savings	203,505.07
Effects of changes in DSR investments	(18,478.56)
Net PV Cashflow Savings @ 1.143%(Bond Yield)	185,026.51
Contingency or Rounding Amount	1,374.89
Net Future Value Benefit	$196,688.20
Net Present Value Benefit	$186,401.40
Net PV Benefit / $437,266.05 PV Refunded Interest	42.629%
Net PV Benefit / $2,453,505.07 PV Refunded Debt Service	7.597%
Net PV Benefit / $2,160,000 Refunded Principal	8.630%
Net PV Benefit / $2,250,000 Refunding Principal	8.285%

Refunding Bond Information

Refunding Dated Date	12/29/2020
Refunding Delivery Date	12/29/2020

File | Chaska.sf | 2021 Ref 2011D Elec Util | SINGLE PURPOSE | 11/11/2020 | 9:30 AM

$2,250,000

City of Chaska, Minnesota

Electric Utility Revenue Refunding Bonds, Series 2020F

Current Refunding of 2011D Bonds

DEBT SERVICE SCHEDULE

Date	Principal	Coupon	Interest	Total P+I	Fiscal Total
12/29/2020	-	-	-	-	-
04/01/2021	-	-	5,477.19	5,477.19	-
10/01/2021	195,000.00	0.480%	10,716.25	205,716.25	211,193.44
04/01/2022	-	-	10,248.25	10,248.25	-
10/01/2022	195,000.00	0.520%	10,248.25	205,248.25	215,496.50
04/01/2023	-	-	9,741.25	9,741.25	-
10/01/2023	200,000.00	0.570%	9,741.25	209,741.25	219,482.50
04/01/2024	-	-	9,171.25	9,171.25	-
10/01/2024	200,000.00	0.650%	9,171.25	209,171.25	218,342.50
04/01/2025	-	-	8,521.25	8,521.25	-
10/01/2025	200,000.00	0.760%	8,521.25	208,521.25	217,042.50
04/01/2026	-	-	7,761.25	7,761.25	-
10/01/2026	200,000.00	0.900%	7,761.25	207,761.25	215,522.50
04/01/2027	-	-	6,861.25	6,861.25	-
10/01/2027	205,000.00	1.000%	6,861.25	211,861.25	218,722.50
04/01/2028	-	-	5,836.25	5,836.25	-
10/01/2028	210,000.00	1.150%	5,836.25	215,836.25	221,672.50
04/01/2029	-	-	4,628.75	4,628.75	-
10/01/2029	210,000.00	1.300%	4,628.75	214,628.75	219,257.50
04/01/2030	-	-	3,263.75	3,263.75	-
10/01/2030	215,000.00	1.450%	3,263.75	218,263.75	221,527.50
04/01/2031	-	-	1,705.00	1,705.00	-
10/01/2031	220,000.00	1.550%	1,705.00	221,705.00	223,410.00
Total	$2,250,000.00	-	$151,669.94	$2,401,669.94	-

SIGNIFICANT DATES

Dated Date	12/29/2020
Delivery Date	12/29/2020
First Coupon Date	4/01/2021

Yield Statistics

Bond Year Dollars	$13,210.00
Average Life	5.871 Years
Average Coupon	1.1481449%
Net Interest Cost (NIC)	1.3866006%
True Interest Cost (TIC)	1.3943785%
Bond Yield for Arbitrage Purposes	1.1433518%
All Inclusive Cost (AIC)	1.8490768%

IRS Form 8038

Net Interest Cost	1.1481449%
Weighted Average Maturity	5.871 Years

File | Chaska.sf | 2021 Ref 2011D Elec Util | SINGLE PURPOSE | 11/11/2020 | 9:30 AM

$3,535,000

City of Chaska, Minnesota

Electric Utility Revenue Bonds, Series 2011D

Debt Service To Maturity And To Call

Date	Refunded Bonds	Refunded Interest	D/S To Call	Principal	Coupon	Interest	Refunded D/S
12/29/2020	-	-	-	-	-	-	-
02/01/2021	2,160,000.00	22,656.67	2,182,656.67	-	-	-	-
04/01/2021	-	-	-	-	-	33,985.00	33,985.00
10/01/2021	-	-	-	165,000.00	2.400%	33,985.00	198,985.00
04/01/2022	-	-	-	-	-	32,005.00	32,005.00
10/01/2022	-	-	-	170,000.00	2.600%	32,005.00	202,005.00
04/01/2023	-	-	-	-	-	29,795.00	29,795.00
10/01/2023	-	-	-	180,000.00	2.750%	29,795.00	209,795.00
04/01/2024	-	-	-	-	-	27,320.00	27,320.00
10/01/2024	-	-	-	185,000.00	2.800%	27,320.00	212,320.00
04/01/2025	-	-	-	-	-	24,730.00	24,730.00
10/01/2025	-	-	-	185,000.00	3.000%	24,730.00	209,730.00
04/01/2026	-	-	-	-	-	21,955.00	21,955.00
10/01/2026	-	-	-	190,000.00	3.200%	21,955.00	211,955.00
04/01/2027	-	-	-	-	-	18,915.00	18,915.00
10/01/2027	-	-	-	200,000.00	3.300%	18,915.00	218,915.00
04/01/2028	-	-	-	-	-	15,615.00	15,615.00
10/01/2028	-	-	-	210,000.00	3.400%	15,615.00	225,615.00
04/01/2029	-	-	-	-	-	12,045.00	12,045.00
10/01/2029	-	-	-	215,000.00	3.500%	12,045.00	227,045.00
04/01/2030	-	-	-	-	-	8,282.50	8,282.50
10/01/2030	-	-	-	225,000.00	3.550%	8,282.50	233,282.50
04/01/2031	-	-	-	-	-	4,288.75	4,288.75
10/01/2031	-	-	-	235,000.00	3.650%	4,288.75	239,288.75
Total	$2,160,000.00	$22,656.67	$2,182,656.67	$2,160,000.00	-	$457,872.50	$2,617,872.50

Yield Statistics

Base date for Avg. Life & Avg. Coupon Calculation	12/29/2020
Average Life	6.098 Years
Average Coupon	3.3499667%
Weighted Average Maturity (Par Basis)	6.098 Years
Weighted Average Maturity (Original Price Basis)	6.098 Years

Refunding Bond Information

Refunding Dated Date	12/29/2020
Refunding Delivery Date	12/29/2020

File | Chaska.sf | 2011D Elec Util Rev Bonds | SINGLE PURPOSE | 11/11/2020 | 9:30 AM

City of Chaska, Minnesota

Aggregate Electric Utility Revenue Debt

Aggregate Debt Service -- Accrual Basis

Calendar Year	2017A Electric	2020F Bonds *	Total Parity Debt	Coverage to 2018 Net Revenues	Coverage to 2019 Net Revenues
2021	493,175.00	211,193.44	704,368.44	5.82	10.66
2022	496,975.00	215,496.50	712,471.50	5.76	10.54
2023	495,175.00	219,482.50	714,657.50	5.74	10.50
2024	497,975.00	218,342.50	716,317.50	5.72	10.48
2025	495,175.00	217,042.50	712,217.50	5.76	10.54
2026	496,975.00	215,522.50	712,497.50	5.76	10.54
2027	493,175.00	218,722.50	711,897.50	5.76	10.55
2028	493,975.00	221,672.50	715,647.50	5.73	10.49
2029	495,650.00	219,257.50	714,907.50	5.74	10.50
2030	494,250.00	221,527.50	715,777.50	5.73	10.49
2031	497,550.00	223,410.00	720,960.00	5.69	10.41
2032	495,400.00		495,400.00	8.28	15.15
2033	492,950.00		492,950.00	8.32	15.23
2034	495,200.00		495,200.00	8.28	15.16
2035	497,000.00		497,000.00	8.25	15.10
2036	493,350.00		493,350.00	8.31	15.22
2037	494,400.00		494,400.00	8.29	15.18
-	$8,418,350.00	$2,401,669.94	$10,820,019.94		

** Estimate*

Net Revenues of the Electric Utility and Additional Bonds Test

	2018	2019
Electric Revenue	$ 41,193,202	$ 41,203,336
Electric Expenses	(38,544,343)	(35,238,718)
Operating Income	$ 2,648,859	$ 5,964,618
Plus: Depreciation	1,131,126	1,180,170
Plus: Investment Income	320,467	362,224
Net Revenues Available for D/S	$ 4,100,452	$ 7,507,012
Average Annual Debt Service	$ 636,472	$ 636,472
Coverage to Net Revenues	6.44	11.79

$2,250,000

City of Chaska, Minnesota

Electric Utility Revenue Refunding Bonds, Series 2020F

Current Refunding of 2011D Bonds

Proof of Reserve Fund Requirement

Date	Principal	Interest	TOTAL P+I
10/01/2021	195,000.00	16,193.44	211,193.44
10/01/2022	195,000.00	20,496.50	215,496.50
10/01/2023	200,000.00	19,482.50	219,482.50
10/01/2024	200,000.00	18,342.50	218,342.50
10/01/2025	200,000.00	17,042.50	217,042.50
10/01/2026	200,000.00	15,522.50	215,522.50
10/01/2027	205,000.00	13,722.50	218,722.50
10/01/2028	210,000.00	11,672.50	221,672.50
10/01/2029	210,000.00	9,257.50	219,257.50
10/01/2030	215,000.00	6,527.50	221,527.50
10/01/2031	220,000.00	3,410.00	223,410.00
Total	$2,250,000.00	$151,669.94	$2,401,669.94

PROOF OF RESERVE FUND

MAXIMUM PERIODIC DEBT SERVICE

100 % of the Maximum Periodic Debt Service 223,410.00

AVERAGE PERIODIC DEBT SERVICE

Total P+I 2,401,669.94

Bond Years (Delivery Date) 10.76

125 % of the Average Periodic Debt Service 279,119.70

PERCENT OF PAR

Total Par (Existing + New) 2,250,000.00

10 % of Par 225,000.00

RESERVE REQUIREMENT

Computed Requirement 223,410.00

Proof's Requirement 223,410.00

File | Chaska.sf | 2021 Ref 2011D Elec Util | SINGLE PURPOSE | 11/11/2020 | 9:30 AM

bakertilly MUNICIPAL ADVISORS

City of Chaska, Minnesota

Pre-Sale Summary for Issuance of Bonds

$5,195,000 General Obligation State Aid Street Bonds, Series 2021A

The City Council has under consideration the issuance of the Bonds to redeem a portion of the City's General Obligation Temporary State Aid Street Bonds, Series 2019A (the "Temporary Bonds"). This document provides information relative to the proposed issuance.

KEY EVENTS: The following summary schedule includes the timing of some of the key events that will occur relative to the bond issuance:

December 7, 2020	City Council considers a Resolution approving the issuance of the Bonds and setting certain parameters
Week of December 7, 2020	Rating conference is conducted
December 16, 2020, 10:00 a.m.	Competitive proposals are received
December 16, 2020	Designated Pricing Committee considers award of the Bonds
January 14, 2021	Proceeds are received
February 15, 2021	Partial redemption of the Temporary Bonds

RATING: An application will be made to S&P Global Ratings (S&P) for a rating on the Bonds. The City's general obligation debt is currently rated "AA" by S&P with a negative outlook.

THE MARKET: Performance of the tax-exempt market is often measured by the Bond Buyer's Index ("BBI") which measures the yield of high grade municipal bonds in the 20th year for general obligation bonds rated Aa2 by Moody's or AA by S&P (the BBI 20-Bond GO Index) and the 30th year for revenue bonds rated A1 by Moody's or A+ by S&P (the BBI 25-Bond Revenue Index). The following chart illustrates these two indices over the past five years:

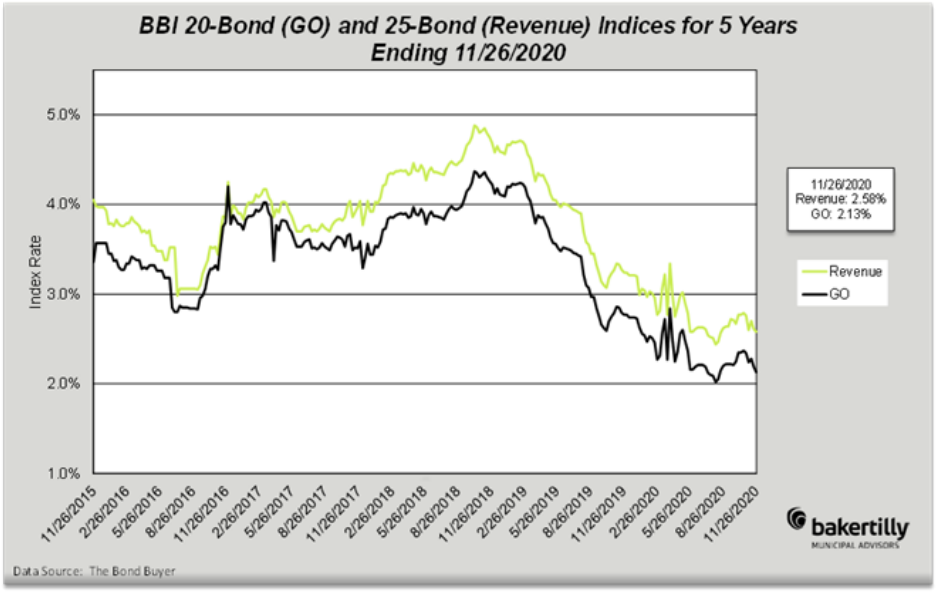

Study No: 0238.200_1584427
Date: December 2, 2020

Description of Issue

PURPOSE:	Proceeds of the Bonds will be used to redeem $5,190,000 of principal and accrued interest of $16,365.80 of the City's General Obligation Temporary State Aid Street Bonds, Series 2019A, dated March 29, 2019 (the "Temporary Bonds") and provide permanent long-term financing. The City issued the Temporary Bonds in the principal amount of $20 million in the form of a draw down line of credit with Old National Bank as the purchaser. The proceeds of the Temporary Bonds were used to pay for the costs of constructing the Highway 212 and CSAH 44 interchange and CSAH 44 improvement project (the "Interchange Project"). The total estimated cost of the Interchange Project at the time of the issuance of the Temporary Bonds was $21,000,000. The Temporary Bonds are currently outstanding in the principal amount of $6,955,000. On February 15, 2021 (the "Redemption Date"), the City will use proceeds of the Bonds to redeem a portion of the Temporary Bonds along with funds received from the State of Minnesota or Carver County to redeem the total outstanding amount of the Temporary Bonds.
AUTHORITY:	Statutory Authority: The Bonds are being issued pursuant to Minnesota Statutes, Chapter 475 and Section 162.18. Statutory Requirements: Under Minnesota Statute Section 162.18, the City can issue state aid-street bonds as long as the average annual debt service for all subsequent calendar years on the Bonds and any outstanding state-aid street bonds does not exceed 90% of the amount of the last annual construction allotment. The City's 2020 construction allotment was $966,103 and 90% of that is $869,493. The City has no other outstanding state-aid street bonds and the estimated average annual debt service on the proposed issuance is $296,715, which is within the statutory limit. All interest on the obligations shall be paid out of the municipality's normal maintenance account in the municipal state-aid street fund.
PARAMETER LIMITS:	Pursuant to the Parameters Resolutions to be adopted by the Council on December 7, 2020, the authority to award the sale of the Bonds has been delegated to a Pricing Committee, subject to the following parameters; (i) the principal amount may not exceed $5,500,000 and (ii) the true interest cost (TIC) may not exceed 3.50%.
SECURITY AND SOURCE OF PAYMENT:	The Bonds are a general obligation of the City, secured by its full faith and credit and taxing power. The Bonds will be repaid from the City's Municipal State-Aid (MSA) allotments received annually from the Minnesota Department of Transportation. Annual allotments will be used to make the April 1 principal and interest payment and the October 1 interest payment due in each year. The City does not expect to levy taxes for repayment of the Bonds.
STRUCTURING SUMMARY:	In consultation with the City, the Bonds have been structured with a repayment term of twenty years to provide an approximately level annual debt service requirement. Estimated interest rates applied in the structuring of the Bonds are based on current market conditions and assume a reoffering premium. The underwriter will take their

compensation from the reoffering premium. Excess premium net of the underwriter's compensation will be applied to the redemption of the Temporary Bonds.

SCHEDULES ATTACHED: Schedules attached for the Bonds include sources and uses, pricing summary, debt service schedule, given current market condition and debt service to maturity and call.

RISKS/SPECIAL CONSIDERATIONS: The outcome of this financing will rely on the market conditions at the time of the sale. Any projections included herein are estimates based on current market conditions.

The attached schedules show a reasonable estimate of premium pricing based on the current interest rate environment. Original issue premium is a combination of interest rates, reoffering premium and underwriter's compensation. Although we've made a reasonable estimate on pricing and amount of premium generated, these are estimates and actual pricing may differ. Any such difference could result in less or more premium than shown in these schedules.

SALE TERMS AND MARKETING: Variability of Issue Size: A specific provision in the sale terms permits modifications to the issue size and/or maturity structure to customize the issue once the price and interest rates are set on the day of sale.

Prepayment Provisions: Bonds maturing on or after April 1, 2031 may be prepaid at a price of par plus accrued interest on or after April 1, 2030.

Bank Qualification: The City does not expect to issue more than $10 million in tax-exempt obligations that count against the $10 million limit for 2021; therefore, the Bonds are designated as bank qualified.

Post Issuance

POST ISSUANCE COMPLIANCE: The issuance of the Bonds will result in post-issuance compliance responsibilities. The responsibilities are in two primary areas: (i) compliance with federal arbitrage requirements and (ii) compliance with secondary disclosure requirements.

Federal arbitrage requirements include a wide range of implications that have been taken into account as this issue has been structured. Post-issuance compliance responsibilities for this tax-exempt issue include both rebate and yield restriction provisions of the IRS Code. In general terms the arbitrage requirements control the earnings on unexpended bond proceeds, including investment earnings, moneys held for debt service payments (which are considered to be proceeds under the IRS regulations), and/or reserves. Under certain circumstances any "excess earnings" will need to be paid to the IRS to maintain the tax-exempt status of the Bonds. Any interest earnings on gross bond proceeds or debt service funds should not be spent until it has been determined based on actual facts that they are not "excess earnings" as defined by the IRS Code.

The arbitrage rules provide for spend-down exceptions for proceeds that are spent within either a 6-month, 18-month or, for certain construction issues, a 24-month period each in accordance with certain spending criteria. Proceeds that qualify for an exception will be exempt from rebate. These exceptions are based on actual expenditures and not based on reasonable expectations, and expenditures, including any investment proceeds will

have to meet the spending criteria to qualify for the exclusion. The City expects to meet the 6-month spending exception.

Regardless of whether the issue qualifies for an exemption from the rebate provisions, yield restriction provisions will apply to Bond proceeds (including interest earnings) unspent after three years and the debt service fund throughout the term of the Bonds. These moneys should be monitored until the Bonds are retired.

Secondary disclosure requirements result from an SEC requirement that underwriters provide ongoing disclosure information to investors. To meet this requirement, any prospective underwriter will require the City to commit to providing the information needed to comply under a continuing disclosure agreement.

Baker Tilly and the City have entered into an Agreement for Municipal Advisor Services under which Baker Tilly will provide continuing disclosure and arbitrage rebate services on the Bonds.

SUPPLEMENTAL INFORMATION AND BOND RECORD:

Supplementary information will be available to staff including detailed terms and conditions of sale, comprehensive structuring schedules and information to assist in meeting post-issuance compliance responsibilities.

Upon completion of the financing, a bond record will be provided that contains pertinent documents and final debt service calculations for the transaction.

Baker Tilly Municipal Advisors, LLC is a registered municipal advisor and wholly-owned subsidiary of Baker Tilly US, LLP, an accounting firm. Baker Tilly US, LLP trading as Baker Tilly, is a member of the global network of Baker Tilly International Ltd., the members of which are separate and independent legal entities. © 2020 Baker Tilly Municipal Advisors, LLC.

$5,195,000

City of Chaska, Minnesota

General Obligation State Aid Street Bonds, Series 2021A

Sources & Uses

Dated 01/14/2021 | Delivered 01/14/2021

Sources Of Funds	
Par Amount of Bonds	$5,195,000.00
Reoffering Premium	127,365.20
Total Sources	**$5,322,365.20**
Uses Of Funds	
Deposit to Current Refunding Fund	5,206,365.80
Total Underwriter's Discount (1.200%)	62,340.00
Costs of Issuance	53,230.00
Rounding Amount	429.40
Total Uses	**$5,322,365.20**

File | Chaska.sf | 2021A GO State Aid Street | SINGLE PURPOSE | 11/25/2020 | 7:24 AM

$5,195,000

City of Chaska, Minnesota

General Obligation State Aid Street Bonds, Series 2021A

Pricing Summary

Maturity	Type of Bond	Coupon	Yield	Maturity Value	Price	Dollar Price
04/01/2022	Serial Coupon	2.000%	0.430%	200,000.00	101.898%	203,796.00
04/01/2023	Serial Coupon	2.000%	0.450%	225,000.00	103.410%	232,672.50
04/01/2024	Serial Coupon	2.000%	0.480%	225,000.00	104.841%	235,892.25
04/01/2025	Serial Coupon	2.000%	0.540%	230,000.00	106.074%	243,970.20
04/01/2026	Serial Coupon	2.000%	0.740%	235,000.00	106.432%	250,115.20
04/01/2027	Serial Coupon	2.000%	0.800%	240,000.00	107.259%	257,421.60
04/01/2028	Serial Coupon	2.000%	0.900%	245,000.00	107.665%	263,779.25
04/01/2029	Serial Coupon	2.000%	1.000%	250,000.00	107.866%	269,665.00
04/01/2030	Serial Coupon	2.000%	1.100%	255,000.00	107.864%	275,053.20
04/01/2031	Serial Coupon	1.250%	1.250%	260,000.00	100.000%	260,000.00
04/01/2032	Serial Coupon	1.300%	1.300%	265,000.00	100.000%	265,000.00
04/01/2033	Serial Coupon	1.350%	1.350%	265,000.00	100.000%	265,000.00
04/01/2034	Serial Coupon	1.450%	1.450%	270,000.00	100.000%	270,000.00
04/01/2035	Serial Coupon	1.550%	1.550%	275,000.00	100.000%	275,000.00
04/01/2036	Serial Coupon	1.650%	1.650%	280,000.00	100.000%	280,000.00
04/01/2037	Serial Coupon	1.800%	1.800%	285,000.00	100.000%	285,000.00
04/01/2038	Serial Coupon	1.850%	1.850%	290,000.00	100.000%	290,000.00
04/01/2039	Serial Coupon	1.900%	1.900%	295,000.00	100.000%	295,000.00
04/01/2040	Serial Coupon	1.950%	1.950%	300,000.00	100.000%	300,000.00
04/01/2041	Serial Coupon	1.970%	1.970%	305,000.00	100.000%	305,000.00
Total	-	-	-	$5,195,000.00	-	$5,322,365.20

Bid Information

Par Amount of Bonds	$5,195,000.00
Reoffering Premium or (Discount)	127,365.20
Gross Production	$5,322,365.20
Total Underwriter's Discount (1.200%)	$(62,340.00)
Bid (101.252%)	5,260,025.20
Total Purchase Price	$5,260,025.20
Bond Year Dollars	$58,836.15
Average Life	11.326 Years
Average Coupon	1.7608377%
Net Interest Cost (NIC)	1.6503186%
True Interest Cost (TIC)	1.6352416%

File | Chaska.sf | 2021A GO State Aid Street | SINGLE PURPOSE | 11/25/2020 | 7:24 AM

$5,195,000

City of Chaska, Minnesota

General Obligation State Aid Street Bonds, Series 2021A

Debt Service Schedule

Date	Principal	Coupon	Interest	Total P+I	105% Levy
04/01/2021	-	-	-	-	-
04/01/2022	200,000.00	2.000%	113,047.65	313,047.65	328,700.03
04/01/2023	225,000.00	2.000%	89,128.50	314,128.50	329,834.93
04/01/2024	225,000.00	2.000%	84,628.50	309,628.50	325,109.93
04/01/2025	230,000.00	2.000%	80,128.50	310,128.50	325,634.93
04/01/2026	235,000.00	2.000%	75,528.50	310,528.50	326,054.93
04/01/2027	240,000.00	2.000%	70,828.50	310,828.50	326,369.93
04/01/2028	245,000.00	2.000%	66,028.50	311,028.50	326,579.93
04/01/2029	250,000.00	2.000%	61,128.50	311,128.50	326,684.93
04/01/2030	255,000.00	2.000%	56,128.50	311,128.50	326,684.93
04/01/2031	260,000.00	1.250%	51,028.50	311,028.50	326,579.93
04/01/2032	265,000.00	1.300%	47,778.50	312,778.50	328,417.43
04/01/2033	265,000.00	1.350%	44,333.50	309,333.50	324,800.18
04/01/2034	270,000.00	1.450%	40,756.00	310,756.00	326,293.80
04/01/2035	275,000.00	1.550%	36,841.00	311,841.00	327,433.05
04/01/2036	280,000.00	1.650%	32,578.50	312,578.50	328,207.43
04/01/2037	285,000.00	1.800%	27,958.50	312,958.50	328,606.43
04/01/2038	290,000.00	1.850%	22,828.50	312,828.50	328,469.93
04/01/2039	295,000.00	1.900%	17,463.50	312,463.50	328,086.68
04/01/2040	300,000.00	1.950%	11,858.50	311,858.50	327,451.43
04/01/2041	305,000.00	1.970%	6,008.50	311,008.50	326,558.93
Total	$5,195,000.00	-	$1,036,009.15	$6,231,009.15	$6,542,559.61

SIGNIFICANT DATES

Dated	1/14/2021
Delivery Date	1/14/2021
First Coupon Date	10/01/2021

Yield Statistics

Bond Year Dollars	$58,836.15
Average Life	11.326 Years
Average Coupon	1.7608377%
Net Interest Cost (NIC)	1.6503186%
True Interest Cost (TIC)	1.6352416%
Bond Yield for Arbitrage Purposes	1.5182297%
All Inclusive Cost (AIC)	1.7366735%

IRS Form 8038

Net Interest Cost	1.5240474%
Weighted Average Maturity	11.202 Years

Interest rates are estimates. Changes in rates may cause significant alterations to this schedule. The actual underwriter's discount bid may also vary.

File | Chaska.sf | 2021A GO State Aid Street | SINGLE PURPOSE | 11/25/2020 | 7:24 AM

$20,000,000

City of Chaska, Minnesota

Line of Credit

Old National Bank

Debt Service To Maturity And To Call

Date	Refunded Bonds	Refunded Interest	D/S To Call	Principal	Coupon	Interest	Refunded D/S
01/14/2021	-	-	-	-	-	-	-
02/15/2021	5,190,000.00	16,365.80	5,206,365.80	-	-	-	-
04/01/2021	-	-	-	5,190,000.00	2.580%	33,475.50	5,223,475.50
Total	$5,190,000.00	$16,365.80	$5,206,365.80	$5,190,000.00	-	$33,475.50	$5,223,475.50

Yield Statistics

Base date for Avg. Life & Avg. Coupon Calculation	1/14/2021
Average Life	0.214 Years
Average Coupon	2.5800000%
Weighted Average Maturity (Par Basis)	0.214 Years
Weighted Average Maturity (Original Price Basis)	0.214 Years

Refunding Bond Information

Refunding Dated Date	1/14/2021
Refunding Delivery Date	1/14/2021

File | Chaska.sf | 2019 VR Old National Bank | SINGLE PURPOSE | 12/ 1/2020 | 3:42 PM

REQUEST FOR ACTION
CHASKA CITY COUNCIL
~~DECEMBER 7, 2020~~12/7/2020

Subject: **Professional Services for the TH 41/CSAH 61 Improvements in Historic Downtown Chaska**

Prepared By: **Matt Clark, City Engineer**

The City has worked closely with MnDOT and Carver County staff for over 5 years to solicit funding for a project to reconstruct state trunk highway 41 (Chestnut Street) through downtown Chaska along with a segment of County Highway 61 (Chaska Boulevard) shown on the attached exhibit. The project was developed through a corridor study which can be found online at https://clients.bolton-menk.com/4161/ that began in 2015 to evaluate the improvements to both the state trunk highway 41 and county highway 61 in downtown. Since the completion of the Highway 41/61 corridor study in 2017, the City of Chaska has been leading the pursuit of competitive funds to complete the Downtown Chaska Improvement project. To date, Chaska has secured the needed funding thru partnerships with Carver County, MnDOT, and through competitive awards from the Minnesota Highway Freight Program (MHFP) as well as the Transportation and Economic Development Program (TED) to satisfy the overall project costs in the amount of $24.5 million dollars. The project funding is programmed to begin for fiscal year 2022.

The Highway 41/CSAH 61 Improvements in Historic Downtown Chaska (Attachment A) will provide significant safety and mobility benefits for the Historic Downtown business district through this constrained corridor. These safety and mobility benefits include conversion of Trunk Highway 41 from a four lane undivided to a three lane divided with the addition of turning lanes at all public street intersections, removal of on-street parking, elimination of weaving traffic, a larger pedestrian walkway, and streetscape elements, paseo's, parking lots, and other wayfinding elements that complement the City's Downtown Master Plan.

Improvements to County State Aid Highway 61 include a full depth roadway reconstruction along with new medians between full access intersections, concrete sidewalks, and streetscape elements. Access changes are proposed along CSAH 61 with new public street connections within the Brickyard Commercial Area located between Walnut Street and Yellow Brick Road.

A preliminary layout is complete, but much work is still needed to ready the project to meet the funding deadlines. In October, the City solicited proposals to engineering firms for professional services to assist with the design, management, administration, landscape architecture, right of way, communications and other technical expertise that will bring the vision established in the planning process to a project that is planned for a construction year of 2022.

This project will directly and indirectly impact a large number of people and businesses. As such, one of the first items that the consultant(s) will be working on is a public engagement

plan to keep the public involved and informed as this project moves forward. Additionally, trying to finish this project by the end of 2023 (as required by the funding sources) is a challenging endeavor. Staff and the consultants will keep the council and the public engaged and informed as we move through design and into construction.
Although multiple firms were solicited, the City did receive one proposal from Bolton and Menk Engineering who will be partnering with multiple other firms such as Stantec, Hoisington Koegler Group Inc, Braun Inertec, and other technical companies to bring the project vision into reality. Bolton and Menk Engineering was the firm that lead the original corridor study and will be picking up where the study left off to deliver a designed project that will be bid in the Spring of 2022 with the CSAH 61 constructed in the Summer/Fall of 2022, and TH 41 constructed in 2023. The City will be the lead agent on coordinating the process from design leading up to construction being implemented. The Bolton and Menk proposal totals $2,681,360.00 in professional service fees to support project delivery.

To support payment of the professional services, the City would be entering into a joint powers agreement with Carver County to fund the professional services portion of the project costs. The overall total project costs of the improvements that are planned are estimated to be $24.5 Million dollars of which the City's share is estimated around $2.1 Million based on the cost estimates to complete all the improvements. The remaining $22.4 Million is being funded through state grants, federal funds, Carver County, and MnDOT.

Based on the information provided City staff recommends Council approve the award of professional engineering services to Bolton and Menk for the design requested of TH 41/CSAH 61 Improvements in Downtown Chaska in the amount of $2,725,146 contingent upon a final revised proposal and a formal joint powers agreement between the City and Carver County.

CITY COUNCIL ACTION REQUESTED

Motion to adopt Resolution No. 2020-96~~17-88~~, approving the professional engineering services agreement for the TH 41/CSAH 44 Improvements in Historic Downtown Chaska.

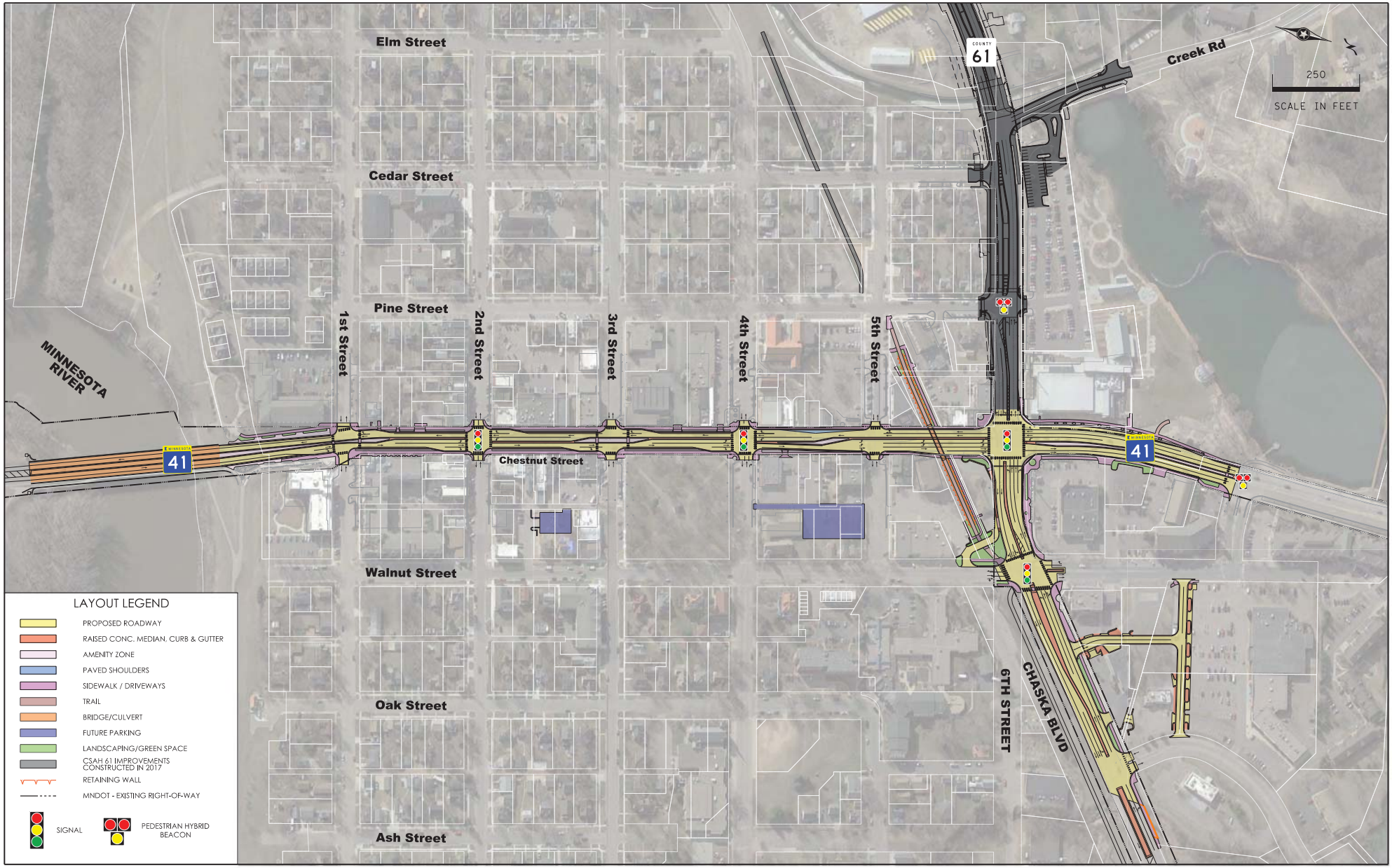
Elm Street
Cedar Street
Pine Street
Chestnut Street
Walnut Street
Oak Street
Ash Street
1st Street
2nd Street
3rd Street
4th Street
5th Street
6TH STREET
CHASKA BLVD
Creek Rd
MINNESOTA RIVER
COUNTY 61
41
250
SCALE IN FEET
LAYOUT LEGEND
PROPOSED ROADWAY
RAISED CONC. MEDIAN, CURB & GUTTER
AMENITY ZONE
PAVED SHOULDERS
SIDEWALK / DRIVEWAYS
TRAIL
BRIDGE/CULVERT
FUTURE PARKING
LANDSCAPING/GREEN SPACE
CSAH 61 IMPROVEMENTS CONSTRUCTED IN 2017
RETAINING WALL
MNDOT - EXISTING RIGHT-OF-WAY
SIGNAL
PEDESTRIAN HYBRID BEACON

AGREEMENT FOR PROFESSIONAL SERVICES

TH 41/CSAH 61 IMPROVEMENTS IN HISTORIC DOWNTOWN CHASKA

CITY OF CHASKA, MINNESOTA and BOLTON & MENK, INC.

This Agreement, made this 6th day of December 2020, by and between CITY OF CHASKA, ONE CITY HALL PLAZA, CHASKA, MN 55318 ("CLIENT"), and BOLTON & MENK, INC., 2638 SHADOW LANE, SUITE 200, CHASKA, MN 55318, ("CONSULTANT").

WITNESS, whereas the CLIENT requires professional services in conjunction with TH41/CSAH 61 IMPROVEMENTS IN HISTORIC DOWNTOWN CHASKA PROJECT ("Project") and whereas the CONSULTANT agrees to furnish the various professional services required by the CLIENT.

NOW, THEREFORE, in consideration of the mutual covenants and promises between the parties hereto, it is agreed:

SECTION I - CONSULTANT'S SERVICES

A. The CONSULTANT agrees to perform the various services in connection with the Project as described in Exhibit I (the "Basic Services").

B. Upon mutual agreement of the parties, Additional Services may be authorized as described in Paragraph IV.B.

C. Consultant shall subcontract with Stantec, Hoisington Koegler Group Inc, Braun Intertec, Henning Professional Services, Patchin Messner Valuation Counselors, Kelly Lindstrom, Streamline, title companies and such other entities as are necessary to provide the Basic Services (the "SUBCONSULTANTS").

SECTION II - THE CLIENT'S RESPONSIBILITIES

A. The CLIENT shall promptly compensate the CONSULTANT in accordance with Section III of this Agreement.

B. The CLIENT shall place any and all previously acquired information in its custody at the disposal of the CONSULTANT for its use. Such information shall include, but is not limited to: boundary surveys, topographic surveys, preliminary sketch plan layouts, building plans, soil surveys, abstracts, deed descriptions, tile maps and layouts, aerial photos, utility agreements, environmental reviews, and zoning limitations. The CONSULTANT may rely upon the accuracy and sufficiency of all such information in performing services unless otherwise instructed, in writing, by CLIENT.

C. The CLIENT will guarantee access to and make all provisions for entry upon public portions of the project and reasonable efforts to provide access to private portions and pertinent adjoining properties.

D. The CLIENT will give prompt notice to the CONSULTANT whenever the CLIENT observes or otherwise becomes aware of any defect in the CONSULTANT'S work.

E. The CLIENT shall designate a liaison person to act as the CLIENT'S representative with respect to services to be rendered under this Agreement. Said representative shall have the authority to transmit instructions, receive instructions, receive information, interpret and define the CLIENT'S policies with respect to the project and CONSULTANT'S services. The CLIENT designates Matt Clark as its representative.

F. The CONSULTANT'S services do not include legal, insurance counseling, accounting, independent cost estimating, financial advisory or "municipal advisor" (as described in Section 975 of the Dodd-Frank Wall Street Reform and Consumer Protection Act 2010 and the municipal advisor registration rules issued by the SEC) professional services and the CLIENT shall provide such services as may be required for completion of the Project described in this Agreement.

G. The CLIENT will obtain any and all regulatory permits required for the proper and legal execution of the Project. CONSULTANT will assist CLIENT with permit preparation and documentation to the extent described in Exhibit I.

(Remainder of this page intentionally left blank)

SECTION III - COMPENSATION FOR SERVICES

A. FEES.

1. The CLIENT will compensate the CONSULTANT in accordance with the following Schedule of Fees for the time spent in performance of Agreement services. Total cost of Basic Services shall not exceed $2,725,146.00 without the prior consent of CLIENT. All SUBCONSULTANT fees associated with the Basic Services will be invoiced to the CONSULTANT, with the CONSULTANT invoicing the CLIENT for these services.

Schedule of Fees

Employee Classification	Hourly Billing Rates
Senior Principal	$195-280/Hour
Principal Engineer/Surveyor/Planner/GIS/Landscape Architect	$145-225
Senior Engineer/Surveyor/Planner/GIS/Landscape Architect	$120-210
Project Manager (Inc. Survey, GIS, Landscape Architect)	$115-195
Project Engineer/Surveyor/Planner/Landscape Architect	$90-190
Design Engineer/Landscape Designer/Graduate Engineer/Surveyor	$90-190
Specialist (Nat. Resources; GIS; Traffic; Graphics; Other)	$70-175
Senior Technician (Inc. Construction, GIS, Survey[1])	$90-180
Technician (Inc. Construction, GIS, Survey[1])	$60-155
Administrative/Corporate Specialists	$55-135
Structural/Electrical/Mechanical/Architect	$120-150
GPS/Robotic Survey Equipment	NO CHARGE
CAD/Computer Usage	NO CHARGE
Routine Office Supplies	NO CHARGE
Routine Photo Copying/Reproduction	NO CHARGE
Field Supplies/Survey Stakes & Equipment	NO CHARGE
Mileage	NO CHARGE

[1] No separate charges will be made for GPS or robotic total stations on Bolton & Menk, Inc. survey assignments; the cost of this equipment is included in the rates for Survey Technicians.

2. The preceding Schedule of Fees shall apply for services provided through December 31, 2021. Hourly rates may be adjusted by CONSULTANT, in consultation with CLIENT, on an annual basis thereafter to reflect reasonable changes in its operating costs. Adjusted rates will become effective on January 1st of each subsequent year, upon written acceptance by CLIENT.

3. Rates and charges do not include sales tax. If such taxes are imposed and become applicable after the date of this Agreement CLIENT agrees to pay any applicable sales taxes.

4. SUBCONSULTANT rates are included in Exhibit I and SUBCONSULTANT rates will be subject to the conditions outlined in Section III.A.2 and Section III.A.3.

5. The rates in the Schedule of Fees include labor, general business and other normal and customary expenses associated with operating a professional business. Unless otherwise agreed in writing, the above rates include vehicle and personal expenses, mileage, telephone, survey stakes and routine expendable supplies; and no separate charges will be made for these activities and materials.

6. Additional services as outlined in Section I.B will vary depending upon project conditions and will be billed on an hourly basis by the CONSULTANT at the rate described in Section III.A.1 and will be billed on an hourly basis by the SUBCONSULTANT at the rates included in Exhibit I.

7. Expenses required to complete the agreed scope of services or identified in this paragraph will be invoiced separately, and include but are not limited to large quantities of prints; extra report copies; out-sourced graphics and photographic reproductions; document recording fees; special field and traffic control equipment rental; outside professional and technical assistance; geotechnical services; and other items of this general nature required by the CONSULTANT to fulfill the terms of this Agreement ("Direct Expenses"). CONSULTANT shall be reimbursed at cost for these Direct Expenses incurred in the performance of the work, subject to the total cost not to exceed fee or approved Additional Services.

B. PAYMENTS AND RECORDS

1. The payment to the CONSULTANT will be made by the CLIENT upon billing at intervals not more often than monthly at the herein rates and terms.

2. If CLIENT fails to make any payment due CONSULTANT for undisputed services and expenses within 45 days after date of the CONSULTANT'S invoice, a service charge of one-half percent (0.5%) per month or the maximum rate permitted by law, whichever is less, will be charged on any unpaid balance.

3. In addition to the service charges described in preceding paragraph, if the CLIENT fails to make payment for undisputed services and expenses within 60 days after the date of the invoice, the CONSULTANT may, upon giving seven days' written notice to CLIENT, suspend services and withhold project deliverables due under this Agreement until CONSULTANT has been paid in full for all past due amounts for undisputed services, expenses and charges, without waiving any claim or right against the CLIENT and without incurring liability whatsoever to the CLIENT.

4. Documents Retention. The CONSULTANT will maintain records that reflect all revenues, costs incurred and services provided in the performance of the Agreement. The CONSULTANT will also agree that the CLIENT, State, or their duly authorized representatives may, at any time during normal business hours and as often as reasonably necessary, have access to and the right to examine, audit, excerpt, and transcribe any books, documents, papers, records, etc., and accounting procedures and practices of the CONSULTANT which are relevant to the contract for a period of six years.

SECTION IV - GENERAL

A. STANDARD OF CARE

Professional services provided under this Agreement will be conducted in a manner consistent with that level of care and skill ordinarily exercised by members of the CONSULTANT'S profession currently practicing under similar conditions. No warranty, express or implied, is made.

B. CHANGE IN PROJECT SCOPE

In the event the CLIENT changes or is required to change the scope or duration of the project from that described in Exhibit I, and such changes require work outside of the scope of Basic Services ("Additional Services") by the CONSULTANT, the CONSULTANT shall be entitled to additional compensation at the applicable hourly rates. To the fullest extent practical, the CONSULTANT shall give notice to the CLIENT of any Additional Services, prior to furnishing such Additional Services. The CONSULTANT shall furnish an estimate of additional cost, prior to authorization of the changed scope of work and Agreement will be revised in writing.

C. LIMITATION OF LIABILITY

1. General Liability of CONSULTANT. For liability other than professional acts, errors, or omissions, and to the fullest extent permitted by law, CONSULTANT shall indemnify, defend and hold harmless CLIENT from losses, damages, and judgments (including reasonable attorneys' fees and expenses of litigation) arising from claims or actions relating to the Project, provided that any such claim, action, loss, damages, or judgment is attributable to bodily injury, sickness, disease, or death, or to injury to or destruction of tangible property, but only to the extent caused by the acts and omissions in the non-professional services of CONSULTANT or CONSULTANT'S employees, agents, or subconsultants.

2. Professional Liability of CONSULTANT. With respect to professional acts, errors and omissions and to the fullest extent permitted by law, CONSULTANT shall indemnify and hold harmless CLIENT from losses, damages, and judgments (including reasonable attorneys' fees and expenses of litigation) arising from third-party claims or actions relating to the Project, provided that any such claim, action, loss, damages, or judgment is attributable to bodily injury, sickness, disease, or death, or to injury to or destruction of tangible property, but only to the extent caused by a negligent act, error or omission of CONSULTANT or CONSULTANT'S employees, agents, or SUBCONSULTANTS. This indemnification shall include reimbursement of CLIENT'S reasonable attorneys' fees and expenses of litigation, but only to the extent that the CONSULTANT is adjudged to have been professionally negligent.

3. General Liability of Client. To the fullest extent permitted by law and subject to the maximum limits of liability set forth in Minnesota Statutes Section 466.04, CLIENT shall indemnify, defend and hold harmless CONSULTANT from losses, damages, and judgments (including reasonable attorneys' fees and expenses of litigation) arising from third-party claims or actions relating to the Project, provided that any such claim, action, loss, damages, or judgment is attributable to bodily injury, sickness, disease, or death, or to injury to or destruction of tangible property, but only to the extent caused by the acts or omission of CLIENT or CLIENT'S employees, agents, or other consultants.

4. To the fullest extent permitted by law, CLIENT and CONSULTANT waive against each other, and the other's employees, officers, directors, members, agents, insurers, partners, and consultants, any and all claims for or entitlement to special, incidental, indirect, or consequential damages arising out of, resulting from, or in any way related to this Agreement, from any cause or causes. CLIENT waives all claims against individuals involved in the services provided under this Agreement and agrees to limit all claims to the CONSULTANT's corporate entity.

5. Nothing contained in this Agreement shall create a contractual relationship with or a cause of action in favor of a third party against either the CLIENT or the CONSULTANT. The CONSULTANT'S services under this Agreement are being performed solely for the CLIENT'S benefit, and no other entity shall have any claim against the CONSULTANT because of this Agreement or the performance or nonperformance of services provided hereunder.

D. INSURANCE

1. The CONSULTANT agrees to maintain, at CONSULTANT'S expense a commercial general liability (CGL) and excess or umbrella general liability insurance policy or policies insuring CONSULTANT, on an occurrence basis, against claims for bodily injury, death or property damage arising out of CONSULTANT'S general business activities. The general liability coverage shall provide limits of not less than $1,500,000 per occurrence and not less than $3,000,000 general aggregate. Coverage shall include Premises and Operations Bodily Injury and Property Damage; Personal and Advertising Injury; Blanket Contractual Liability; Products and Completed Operations Liability.

2. The CONSULTANT also agrees to maintain, at CONSULTANT'S expense, a single limit or combined limit automobile liability insurance and excess or umbrella liability policy or policies, on an occurrence basis, insuring owned, non-owned and hired vehicles used by CONSULTANT under this Agreement. The automobile liability coverages shall provide limits of not less than $1,000,000 per accident for property damage, $1,500,000 for bodily injuries, death and damages to any one person and $1,500,000 for total bodily injury, death and damage claims arising from one accident.

3. CLIENT shall be named Additional Insured for the above CGL and Auto liability policies.

4. The CONSULTANT agrees to maintain, at the CONSULTANT'S expense, statutory worker's compensation coverage together with Coverage B, Employer's Liability limits of not less than $500,000 for Bodily Injury by Disease per employee, $500,000.00 for Bodily Injury by Disease aggregate and $500,000 for Bodily Injury by Accident.

5. The CONSULTANT also agrees to maintain, at CONSULTANT'S expense, Professional Liability Insurance coverage insuring CONSULTANT against damages for legal liability arising from a negligent act, error or omission in the performance of professional services required by this Agreement during the period of CONSULTANT'S services and for three years following date of final completion of its services. The professional liability insurance coverage shall provide limits of not less than $1,500,000 per claim and an annual aggregate of not less than $3,000,000 on a claims-made basis.

6. CLIENT shall maintain statutory Workers Compensation insurance coverage on all of CLIENT'S employees and other liability insurance coverage for injury and property damage to third parties due to the CLIENT'S negligence.

7. Prior to commencement of this Agreement, CONSULTANT will provide the CLIENT with certificates of insurance, showing evidence of required coverages in form and content acceptable to CLIENT. All policies of insurance shall contain a provision or endorsement that the coverage afforded will not be canceled or reduced in limits by endorsement for any reason except non-payment of premium, until at least 30 days prior written notice has been given to the Certificate Holder, and at least 10 days prior written notice in the case of non-payment of premium.

8. All insurance of CONSULTANT shall be maintained throughout the term of this Agreement.

9. All policies of insurance shall be available for inspection by CLIENT.

E. OPINIONS OR ESTIMATES OF CONSTRUCTION COST

Where provided by the CONSULTANT as part of Exhibit I or otherwise, opinions or estimates of construction cost will generally be based upon public construction cost information. Since the CONSULTANT has no control over the cost of labor, materials, competitive bidding process, weather conditions and other factors affecting the cost of construction, all cost estimates are opinions for general information of the CLIENT and the CONSULTANT does not warrant or guarantee the accuracy of construction cost opinions or estimates. The CLIENT acknowledges that costs for project financing should be based upon contracted construction costs with appropriate contingencies.

F. CONSTRUCTION SERVICES

It is agreed that the CONSULTANT and its representatives shall not at any time supervise, direct, control, or have authority over any contractor's work, nor shall CONSULTANT have authority over or be responsible for the means, methods, techniques, sequences, or procedures of construction selected or used by any contractor, or the safety precautions and programs incident thereto, for security or safety at any Project site, nor for any failure of a Contractor to comply with Laws and Regulations applicable to that Contractor's furnishing and performing of its work. CONSULTANT shall not be responsible for the acts or omissions of any Contractor. CLIENT acknowledges that on-site contractor(s) are solely responsible for construction site safety programs and their enforcement.

G. USE OF ELECTRONIC/DIGITAL DATA

1. Because of the potential instability of electronic/digital data and susceptibility to unauthorized changes, copies of documents that may be relied upon by CLIENT are limited to the printed copies (also known as hard copies) that are signed or sealed by CONSULTANT. Except for electronic/digital data which is specifically identified as a project deliverable for this Agreement or except as otherwise explicitly provided in this Agreement, all electronic/digital data developed by the CONSULTANT as part of the Project is acknowledged to be an internal working document for the CONSULTANT'S purposes solely and any such information provided to the CLIENT shall be on an "AS IS" basis strictly for the convenience of the CLIENT without any warranties of any kind. As such, the CLIENT is advised and acknowledges that use of such information may require substantial modification and independent verification by the CLIENT (or its designees).

2. Provision of electronic/digital data, whether required by this Agreement or provided as a convenience to the Client, does not include any license of software or other systems necessary to read, use or reproduce the information. It is the responsibility of the CLIENT to verify compatibility with its system and long-term stability of media. CLIENT shall indemnify and hold harmless CONSULTANT and its SUBCONSULTANTS from all claims, damages, losses, and expenses, including attorneys' fees arising out of or resulting from third party use or any adaptation or distribution of electronic/digital data provided under this Agreement, unless such third party use and adaptation or distribution is explicitly authorized by this Agreement.

H. REUSE OF DOCUMENTS

1. Drawings and Specifications and all other documents (including electronic and digital versions of any documents) prepared or furnished by CONSULTANT pursuant to this Agreement are instruments of service in respect to the Project and CONSULTANT shall retain an ownership interest therein. Upon payment of all fees owed to the CONSULTANT, the CLIENT shall acquire an ownership interest in all identified deliverables (including Reports, Plans and Specifications). Such ownership interest to Owner shall not create any rights in third parties.

2. Previously Created Works and Documents of CONSULTANT. Notwithstanding the foregoing, CONSULTANT retains title and interest in all of its standard details, plans, specifications and engineering computation documents ("Previously Created Works and Documents"), whether in written or electronic form, which have been incorporated into the deliverables and documents provided to CLIENT, but which were developed by CONSULTANT independent of this Agreement. CONSULTANT issues to CLIENT a royalty-free, nonexclusive and irrevocable license to use the Previously Created Works and Documents for the Project.

3. All documents created under this agreement are not intended or represented to be suitable for reuse by CLIENT or others on extensions of the Project or on any other project. Any reuse by CLIENT or, any other entity acting under the request or direction of the CLIENT, without written verification or adaptation by CONSULTANT for such reuse will be at CLIENT'S sole risk and without liability or legal exposure to CONSULTANT and CLIENT shall indemnify and hold harmless CONSULTANT from all claims, damages, losses and expenses including attorney's fees arising out of or resulting from such reuse.

I. CONFIDENTIALITY

CONSULTANT agrees to keep confidential and not to disclose to any person or entity, other than CONSULTANT'S employees and SUBCONSULTANTS any information obtained from CLIENT not previously in the public domain or not otherwise previously known to or generated by CONSULTANT. These provisions shall not apply to information in whatever form that comes into the public domain through no fault of CONSULTANT; or is furnished to CONSULTANT by a third party who is under no obligation to keep such information confidential; or is information for which the CONSULTANT is required to provide by law or authority with proper jurisdiction; or is information upon which the CONSULTANT must rely for defense of any claim or legal action.

J. PERIOD OF AGREEMENT

This Agreement will remain in effect for the longer of a period of two (2) years or until such other expressly identified completion date, after which time the Agreement may be extended upon mutual agreement of both parties.

K. TERMINATION

This Agreement may be terminated:

1. For cause, by either party upon 7 days written notice in the event of substantial failure by other party to perform in accordance with the terms of this Agreement through no fault of the terminating party. For termination by CONSULTANT, cause includes, but is not limited to, failure by CLIENT to pay undisputed amounts owed to CONSULTANT within 120 days of invoice and delay or suspension of CONSULTANT's services for more than 120 days for reasons beyond CONSULTANT'S cause or control; or,

2. For convenience by CLIENT upon 7 days written notice to CONSULTANT.

3. Notwithstanding, the foregoing, this Agreement will not terminate under paragraph IV.K if the party receiving such notice immediately commences correction of any substantial failure and cures the same within 10 days of receipt of the notice.

4. In the event of termination by CLIENT for convenience or by CONSULTANT for cause, the CLIENT shall be obligated to the CONSULTANT for payment of amounts due and owing including payment for services performed or furnished to the date and time of termination, computed in accordance with Section III of this Agreement. CONSULTANT shall deliver and CLIENT shall have, at its sole risk, right of use of any completed or partially completed deliverables, subject to provisions of Paragraph IV. H.

5. In event of termination by CLIENT for cause and in addition to any other remedies available to CLIENT, CONSULTANT shall deliver to CLIENT and CLIENT shall have right of use of any completed or partially completed deliverables, in accordance with the provisions of Paragraph IV.H. CLIENT shall compensate CONSULTANT for all undisputed amounts owed CONSULTANT as of date of termination.

L. INDEPENDENT CONTRACTOR

Nothing in this Agreement is intended or should be construed in any manner as creating or establishing the relationship of co-partners between the parties hereto or as constituting the CONSULTANT, its SUBCONSULTANTS or any of their respective employees as the agent, representative, or employee of the CLIENT for any purpose or in any manner whatsoever. The CONSULTANT is to be and shall remain an independent contractor with respect to all services performed under this Agreement.

M. CONTINGENT FEE

The CONSULTANT warrants that it has not employed or retained any company or person, other than a bona fide employee working solely for the CONSULTANT to solicit or secure this Agreement, and that it has not paid or agreed to pay any company or person, other than a bona fide employee, any fee, commission, percentage, brokerage fee, gift or any other consideration, contingent upon or resulting from award or making of this Agreement.

N. NON-DISCRIMINATION

The provisions of any applicable law or ordinance relating to civil rights and discrimination shall be considered part of this Agreement as if fully set forth herein. **The CONSULTANT is an Equal**

Opportunity Employer and it is the policy of the CONSULTANT that all employees, persons seeking employment, subcontractors, SUBCONSULTANTS and vendors are treated without regard to their race, religion, sex, color, national origin, disability, age, sexual orientation, marital status, public assistance status or any other characteristic protected by federal, state or local law.

O. ASSIGNMENT

Neither party shall assign or transfer any interest in this Agreement without the prior written consent of the other party.

P. SURVIVAL

All obligations, representations and provisions made in or given in Section IV and Documents Retention clause of this Agreement will survive the completion of all services of the CONSULTANT under this Agreement or the termination of this Agreement for any reason.

Q. SEVERABILITY

Any provision or part of the Agreement held to be void or unenforceable under any law or regulation shall be deemed stricken, and all remaining provisions shall continue to be valid and binding upon CLIENT and CONSULTANT, who agree that the Agreement shall be reformed to replace such stricken provision or part thereof with a valid and enforceable provision that comes as close as possible to expressing the intention of the stricken provision.

R. CONTROLLING LAW

This Agreement is to be governed by the law of the State of Minnesota and venued in courts of Minnesota; or at the choice of either party, and if federal jurisdictional requirements can be met, in federal court in the district in which the project is located.

S. DISPUTE RESOLUTION

CLIENT and CONSULTANT agree to negotiate all disputes between them in good faith for a period of 30 days from the date of notice of dispute prior to proceeding to formal dispute resolution or exercising their rights under law. Any claims or disputes unresolved after good faith negotiations shall then be submitted to mediation using a neutral from the Minnesota District Court Rule 114 Roster, or if mutually agreed at time of dispute submittal, a neutral from the American Arbitration Association Construction Industry roster. If mediation is unsuccessful in resolving the dispute, then either party may seek to have the dispute resolved by bringing an action in a court of competent jurisdiction.

T. MINNESOTA GOVERNMENT DATA PRACTICES ACT (MGDPA)

All data collected, created, received, maintained, or disseminated, or used for any purposes in the course of the CONSULTANT'S performance of the Agreement is governed by the Minnesota Government Data Practices Act, Minnesota Statutes Section 13.01, et seq. or any other applicable state statutes and state rules adopted to implement the Act, as well as state statutes and federal regulations on data privacy. The Consultant agrees to abide by these statutes, rules and regulations and as they may be amended. In the event the CONSULTANT receives a request to release data, it shall notify CLIENT as soon as practical. The CLIENT will give instructions to CONSULTANT concerning release of data to the requesting party and CONSULTANT will be reimbursed as

additional services for its reasonable labor and other direct expenses in complying with any MGDPA request, but only to the extent that the request is not due to a negligent, intentional or willful act or omission by the CONSULTANT or other failure to comply with its obligations under this contract.

SECTION V - SIGNATURES

THIS INSTRUMENT embodies the whole agreement of the parties, there being no promises, terms, conditions or obligation referring to the subject matter other than contained herein. This Agreement may only be amended, supplemented, modified or canceled by a duly executed written instrument signed by both parties.

IN WITNESS WHEREOF, the parties hereto have caused this Agreement to be executed in their behalf.

CLIENT: City of Chaska, Minnesota	CONSULTANT: Bolton & Menk, Inc.
By:	By:
Name:	Name: Christopher S. Chromy
Date:	Date:

EXHIBIT I

See attached.

CITY OF CHASKA
CARVER COUNTY, MINNESOTA

RESOLUTION

DATE 12/7/2020 RESOLUTION NO. 2020-96

MOTION BY COUNCILMEMBER_____ SECOND BY COUNCILMEMBER_____

A RESOLUTION AWARDING PROFESSIONAL ENGINEERING SERVICES TO BOLTON AND MENK CONSULTING GROUP INC. FOR ENGINEERING AND PROFESSIONAL SERVICES FOR THE TRUNK HIGHWAY 41 AND CSAH 61 IMPROVEMENTS IN HISTORIC DOWNTOWN CHASKA PROJECT

WHEREAS, since completion of the TH 41/CSAH 44 Corridor Study, the City of Chaska ("City") has been awarded $7.5 million through the State and Federal Grants to reconstruct state trunk highway 41 through downtown Chaska;

WHEREAS, the City and the County are proposing to a project that would reconstruct Trunk Highway 41 from south of the Minnesota River extending north beyond Walnut Court through downtown Chaska along with reconstruction of County State Aid Highway 61 (Chaska Boulevard) from Trunk highway 41 to Yellow Brick Road;

WHEREAS, the City and County are proposing to authorize professional services for project design, coordination and other technical expertise to complete improvements along State Trunk Highway 41 and County State Aid Highway 61 through downtown Chaska;

WHEREAS, The City recently solicited proposals from engineering firms for professional engineering services;

WHEREAS, Bolton and Menk Engineering Inc. was determined to best meet the proposal qualifiers and proposed project schedule;

NOW, THEREFORE, BE IT RESOLVED, by the City Council of the City of Chaska that the professional engineering services are awarded to Bolton and Menk Inc. for the TH 41/CSAH 61 Improvements in Downtown Chaska.

Passed and adopted by the City Council of the City of Chaska, Minnesota, this 7th day of December 2020.

_____
Mark Windschitl, Mayor

Attest:_____
Chaska Deputy Clerk

CLAIMS ROSTER REPORT

FOR COUNCIL MEETING: **December 7, 2020**

Paid and Unpaid Invoices:
Check #'s 335859-336016 **$569,028.52**

Paid Electronic Invoices:
Wire #'s 2575-2581 **$3,881,458.46**

Amount for Approval-Council Meeting: December 7, 2020	**$4,450,486.98**

Checks

INVOICE	P.O.	INV DATE	CHECK RUN	CHECK #	INVOICE NET	DUE DATE	TYPE	STS	INVOICE DESCRIPTION
100006 SCOTT A HUTNICK									
84191		11/30/2020	120820	335859	450.00	12/15/2020	INV	PD	November animal control
CHECK DATE: 12/08/2020									
103825 ACUSHNET COMPANY									
909893769		11/23/2020	120820	335860	138.87	12/23/2020	INV	PD	RESALE
CHECK DATE: 12/08/2020									
100843 AH HERMEL COMPANY									
853726		11/26/2020	120820	335861	58.44	12/26/2020	INV	PD	WATER FOR FD
CHECK DATE: 12/08/2020									
100089 AMERICAN PRESSURE INC									
115560		07/16/2020	120820	335862	-57.60	08/16/2020	CRM	PD	CREDIT PARK CAT PART #761
CHECK DATE: 12/08/2020									
117723		11/17/2020	120820	335862	3,000.00	12/17/2020	INV	PD	#710 WATER HEATER REPLACE
CHECK DATE: 12/08/2020									
					2,942.40				
109323 ANDING, MICHAEL									
2008994.002		11/23/2020	120820	335922	9.98	12/23/2020	INV	PD	RFD-AOA 55+ MONTHLY MEMBE
CHECK DATE: 12/08/2020						PAYEE: ANDING, MICHAEL			
109198 ARCHER MECHANICAL									
24856		11/13/2020	120820	335863	170.50	12/13/2020	INV	PD	CITY HALL BOILER SYS CHEC
CHECK DATE: 12/08/2020									
100174 BAUER BUILT TIRE AND BATTERY									
518007277		10/14/2020	120820	335864	839.00	12/03/2020	INV	PD	TRUCKS 113,115 & 119 TIRE
CHECK DATE: 12/08/2020									
518007634		10/28/2020	120820	335864	2,301.25	12/03/2020	INV	PD	#312 FIRE TIRES & INSTALL
CHECK DATE: 12/08/2020									
					3,140.25				
105265 BEEBE, DENISE									
84182		11/10/2020	120820	335865	20.00	12/25/2020	INV	PD	NOTARY RECORDING FEE
CHECK DATE: 12/08/2020									

INVOICE	P.O.	INV DATE	CHECK RUN	CHECK #	INVOICE NET	DUE DATE	TYPE	STS	INVOICE DESCRIPTION
100214 BORDER STATES INDUSTRIES INC									
921073569	200216	11/17/2020	120820	335866	2,814.48	12/25/2020	INV	PD	ARRESTER/STDOFF UD10KV,VA
CHECK DATE: 12/08/2020									
921109953	200221	11/23/2020	120820	335866	72.63	12/25/2020	INV	PD	(2) LBW LOAD BRK 1/0 SOL
CHECK DATE: 12/08/2020									
921109954	200220	11/23/2020	120820	335866	202.03	12/25/2020	INV	PD	(50) CLAMP PARALLEL GRV #
CHECK DATE: 12/08/2020									
					3,089.14				
100220 BOYER FORD TRUCKS INC									
36493D		11/17/2020	120820	335867	52.52	12/17/2020	INV	PD	#116 PLOW/DUMP TRUCK PART
CHECK DATE: 12/08/2020									
109342 BRETTINGEN, DARIN									
2009071.002		11/23/2020	120820	335923	10.42	12/23/2020	INV	PD	RFD-ADULT SGL MONTHLY MEM
CHECK DATE: 12/08/2020						PAYEE: BRETTINGEN, DARIN			
109190 BUSCH, LESLI									
2009102.002		11/23/2020	120820	335924	10.42	12/23/2020	INV	PD	RFD-ADULT MONTHLY MEMBERS
CHECK DATE: 12/08/2020						PAYEE: BUSCH, LESLI			
109409 CALL, KARLENE									
2009403.002		11/23/2020	120820	335925	16.45	12/23/2020	INV	PD	RFD NOV MEMBERSHIP
CHECK DATE: 12/08/2020						PAYEE: CALL, KARLENE			
109410 CAPRETZ, HOLLY									
2009410.002		11/23/2020	120820	335926	16.45	12/23/2020	INV	PD	RFD NOV MEMBERSHIP
CHECK DATE: 12/08/2020						PAYEE: CAPRETZ, HOLLY			
100314 CARVER COUNTY IS/GIS DEPT									
2670		11/04/2020	120820	335868	265.00	12/04/2020	INV	PD	NOV INTERNET SERVICE
CHECK DATE: 12/08/2020									
100323 CDW GOVERNMENT INC									
4034317		11/10/2020	120820	335869	2,327.38	12/10/2020	INV	PD	SURFACE PRO, DOCKS, KEYBO
CHECK DATE: 12/08/2020									

INVOICE	P.O.	INV DATE	CHECK RUN	CHECK #	INVOICE NET	DUE DATE	TYPE	STS	INVOICE DESCRIPTION
4114826 CHECK DATE: 12/08/2020		11/12/2020	120820	335869	289.28	12/12/2020	INV	PD	PRINTER
4148194 CHECK DATE: 12/08/2020		11/12/2020	120820	335869	212.20	12/12/2020	INV	PD	5 WEBCAMS
4246470 CHECK DATE: 12/08/2020		11/16/2020	120820	335869	507.67	12/16/2020	INV	PD	2 MONITORS, 1 DOCK
4439475 CHECK DATE: 12/08/2020		11/19/2020	120820	335869	1,646.59	12/19/2020	INV	PD	SURFACE PRO
4532750 CHECK DATE: 12/08/2020		11/20/2020	120820	335869	442.80	12/20/2020	INV	PD	10 WIRELESS KEYBOARDS
4634618 CHECK DATE: 12/08/2020		11/24/2020	120820	335869	289.28	12/24/2020	INV	PD	PRINTER
4685313 CHECK DATE: 12/08/2020		11/25/2020	120820	335869	795.92	12/25/2020	INV	PD	8 UPS
					6,511.12				
100337 QWEST CORPORATION									
170990187 CHECK DATE: 12/03/2020		11/16/2020	120320	336005	12,243.54	12/16/2020	INV	PD	NOV INTERNET SERVICE
313196254/NOV20 CHECK DATE: 12/03/2020		11/18/2020	120320	336004	601.01	12/14/2020	INV	PD	NOV CITY HALL LOC PHN SVC
314238800/NOV20 CHECK DATE: 12/03/2020		11/18/2020	120320	336004	74.58	12/14/2020	INV	PD	NOV LOCAL PHN SVC
					12,919.13				
100338 QWEST CORPORATION									
202000790/NOV20 CHECK DATE: 12/03/2020		11/21/2020	120320	336006	3,572.84	12/18/2020	INV	PD	NOV PHONE & LONG DIST SVC
202001327/NOV20 CHECK DATE: 12/03/2020		11/21/2020	120320	336006	40.95	12/18/2020	INV	PD	NOV T1 FOR PHONE SYSTEM
					3,613.79				
109430 CHAVEZ, JUDITH									
2009470.002 CHECK DATE: 12/08/2020		11/23/2020	120820	335927	16.45	12/23/2020	INV	PD	RFD NOV MEMBERSHIP PAYEE: CHAVEZ, JUDITH
100418 CLEARSOFT INC									

INVOICE	P.O.	INV DATE	CHECK RUN	CHECK #	INVOICE NET	DUE DATE	TYPE	STS	INVOICE DESCRIPTION
6118 CHECK DATE: 12/08/2020		11/23/2020	120820	335870	611.52	12/23/2020	INV	PD	Water Softener Salt for Z
105722 CLOVER RIDGE VILLAGE									
2009933.002 CHECK DATE: 12/08/2020		11/24/2020	120820	335928	37.50	12/24/2020	INV	PD	RFD-RENTAL FEE PAYEE: CLOVER RIDGE VILLAGE CONDOS
100436 COMCAST CORPORATION									
0036243/NOV20-TC CHECK DATE: 12/03/2020		11/07/2020	120320	336007	247.47	12/02/2020	INV	PD	CLUBHOUSE CABLE
100429 COORDINATED BUSINESS SYSTEMS LTD									
INV117746 CHECK DATE: 12/08/2020		11/09/2020	120820	335871	25.93	12/09/2020	INV	PD	TC COPIER CONTRACT
109314 COSTELLO, PAT									
2009512.002 CHECK DATE: 12/08/2020		11/23/2020	120820	335929	16.45	12/23/2020	INV	PD	RFD-FAMILY MONTHLY MEMBER PAYEE: COSTELLO, PAT
100490 DAKOTA SUPPLY GROUP INC									
S100134790.001 CHECK DATE: 12/08/2020	200214	11/17/2020	120820	335872	28,700.00	12/25/2020	INV	PD	TRN UG 1500 KVA # 601-190
S100543300.001 CHECK DATE: 12/08/2020		11/12/2020	120820	335872	9,090.00	12/25/2020	INV	PD	STREET LIGHT CONSERVATION
					37,790.00				
102486 MP SYSTEMS INC									
P-05053 CHECK DATE: 12/08/2020		11/17/2020	120820	336016	18,368.94	12/17/2020	INV	PD	MRS BRKR 4 ADD'N CONST -
109397 DOWNIE, JAY									
2009661.002 CHECK DATE: 12/08/2020		11/23/2020	120820	335930	16.45	12/23/2020	INV	PD	RFD-FAMILY MONTHLY MEMBER PAYEE: DOWNIE, JAY
109398 EDISON, BRUCE									
2009667.002 CHECK DATE: 12/08/2020		11/23/2020	120820	335931	16.45	12/23/2020	INV	PD	RFD-FAMILY MONTHLY MEMBER PAYEE: EDISON, BRUCE

INVOICE	P.O.	INV DATE	CHECK RUN	CHECK #	INVOICE NET	DUE DATE	TYPE	STS	INVOICE DESCRIPTION
109399 EDWARDS, RENEE									
2009676.002		11/23/2020	120820	335932	16.45	12/23/2020	INV	PD	RFD-FAMILY MONTHLY MEMBER
CHECK DATE: 12/08/2020						PAYEE: EDWARDS, RENEE			
109401 EHRMAN, BRYCE									
2009679.002		11/23/2020	120820	335933	16.45	12/23/2020	INV	PD	RFD-FAMILY MONTHLY MEMBER
CHECK DATE: 12/08/2020						PAYEE: EHRMAN, BRYCE			
108296 EMMEL, DEVRA									
2009762.002		11/23/2020	120820	335934	16.45	12/23/2020	INV	PD	RFD-FAMILY MONTHLY MEMBER
CHECK DATE: 12/08/2020						PAYEE: EMMEL, DEVRA			
102657 ENERGY MANAGEMENT SOLUTIONS INC									
10085		12/01/2020	120820	335873	6,973.95	01/05/2021	INV	PD	DECEMBER MONTHLY RETAINER
CHECK DATE: 12/08/2020									
103643 EROSION PRODUCTS LLC									
9173		11/20/2020	120820	335874	500.00	12/20/2020	INV	PD	PARK/TURBINE GRASS RESTOR
CHECK DATE: 12/08/2020									
105728 FIDELITY SECURITY LIFE INSURANCE COMPANY									
164584461		11/22/2020	120320	336008	662.43	12/22/2020	INV	PD	DEC EMP INS PREM-VISION
CHECK DATE: 12/03/2020									
109334 FALKENSTEIN, JULIE									
2009016.002		11/23/2020	120820	335935	9.98	12/23/2020	INV	PD	RFD-AOA SGL MONTHLY MEMBE
CHECK DATE: 12/08/2020						PAYEE: FALKENSTEIN, JULIE			
100655 FERRELLGAS 7780961									
1113523154		11/18/2020	120820	335875	178.73	12/18/2020	INV	PD	FORK LIFT PROPANE
CHECK DATE: 12/08/2020									
108271 GALVEZ, ANNA									
2009765.002		11/23/2020	120820	335936	16.45	12/23/2020	INV	PD	RFD-FAMILY MONTHLY MEMBER
CHECK DATE: 12/08/2020						PAYEE: GALVEZ, ANNA			

INVOICE	P.O.	INV DATE	CHECK RUN	CHECK #	INVOICE NET	DUE DATE	TYPE	STS	INVOICE DESCRIPTION
101463 GOPHER STATE ONE CALL									
0110282 CHECK DATE: 12/08/2020		11/30/2020	120820	335876	302.40	12/30/2020	INV	PD	NOVEMBER LOCATES
109336 GUSTAFSON, BRIAN									
2009027.002 CHECK DATE: 12/08/2020		11/23/2020	120820	335937	9.98	12/23/2020	INV	PD	RFD-AOA SGL MONTHLY MEMBE PAYEE: GUSTAFSON, BRIAN
109330 HARTMAN, MOLLY									
2008740.002 CHECK DATE: 12/08/2020		11/19/2020	120820	335938	25.00	12/19/2020	INV	PD	RFD-JUNIOR CURLING CANCEL PAYEE: HARTMAN, MOLLY
102336 HATFIELD, JODEEN									
2009801.002 CHECK DATE: 12/08/2020		11/23/2020	120820	335939	16.45	12/23/2020	INV	PD	RFD-FAMILY MONTHLY MEMBER PAYEE: HATFIELD, JODEEN
100810 HAWKINS INC									
4832651 CHECK DATE: 12/08/2020		11/19/2020	120820	335877	10.00	01/03/2021	INV	PD	DEMURRAGE
104953 HEMME, DWIGHT									
2009805.002 CHECK DATE: 12/08/2020		11/23/2020	120820	335940	16.45	12/23/2020	INV	PD	RFD-FAMILY MONTHLY MEMBER
108640 HERZOG, MELISSA									
2009334.002 CHECK DATE: 12/08/2020		11/23/2020	120820	335941	21.98	12/23/2020	INV	PD	RFD-FAMILY MONTHLY MEMBER PAYEE: HERZOG, MELISSA
100848 HIGH TECH CLEANING INC									
16199 CHECK DATE: 12/08/2020		11/01/2020	120820	335878	202.15	12/01/2020	INV	PD	IT DEPARTMENT
109325 HIGHLAND MANAGEMENT GROUP									
147682-REIMBURSE CHECK DATE: 12/08/2020		08/20/2020	120820	335879	1,430.00	12/20/2020	INV	PD	BROKEN WINDOW AT HAZELTIN PAYEE: HIGHLAND MANAGEMENT GROUP
109328 HOLCOMB, SHANNON									

INVOICE	P.O.	INV DATE	CHECK RUN	CHECK #	INVOICE NET	DUE DATE	TYPE	STS	INVOICE DESCRIPTION
2009645.002		11/23/2020	120820	335942	16.45	12/23/2020	INV	PD	RFD-FAMILY MONTHLY MEMBER
CHECK DATE: 12/08/2020						PAYEE: HOLCOMB, SHANNON			
108687 HORNER, JOHN									
2009035.002		11/23/2020	120820	335943	9.98	12/23/2020	INV	PD	RFD-AOA 55+ SGL MEMBERSHI
CHECK DATE: 12/08/2020						PAYEE: HORNER, JOHN			
109396 HOVE, GREGG									
2009657.002		11/23/2020	120820	335944	16.45	12/23/2020	INV	PD	RFD-FAMILY MONTHLY MEMBER
CHECK DATE: 12/08/2020						PAYEE: HOVE, GREGG			
109400 HUH, JAEYOUNG									
2009677.002		11/23/2020	120820	335945	16.45	12/23/2020	INV	PD	RFD-FAMILY MONTHLY MEMBER
CHECK DATE: 12/08/2020						PAYEE: HUH, JAEYOUNG			
109402 HUTCHINGS, LINDA									
2009680.002		11/23/2020	120820	335946	16.45	12/23/2020	INV	PD	RFD-FAMILY MONTHLY MEMBER
CHECK DATE: 12/08/2020						PAYEE: HUTCHINGS, LINDA			
108162 HYDRO-DESIGNS INC									
0059755-IN		11/30/2020	120820	335880	648.58	12/30/2020	INV	PD	DEVISE TEST MGT NOV 2020
CHECK DATE: 12/08/2020									
107970 PATRICK HAWKINS									
9491		10/22/2020	120820	335881	1,137.28	11/21/2020	INV	PD	CUTTING EDGES (SNOW)
CHECK DATE: 12/08/2020									
108685 JAKOBS, TROY									
2009695.002		11/23/2020	120820	335947	16.45	12/23/2020	INV	PD	RFD-FAMILY MONTHLY MEMBER
CHECK DATE: 12/08/2020						PAYEE: JAKOBS, MICHELLE			
109339 JOHNSON, MARK S									
2009042.002		11/23/2020	120820	335948	9.98	12/23/2020	INV	PD	RFD-AOA SGL MONTHLY MEMBE
CHECK DATE: 12/08/2020						PAYEE: JOHNSON, MARK S			
108948 AUDRANN INC									

INVOICE	P.O.	INV DATE	CHECK RUN	CHECK #	INVOICE NET	DUE DATE	TYPE	STS	INVOICE DESCRIPTION
1285876		11/20/2020	120820	335882	28.79	12/20/2020	INV	PD	NUTDRIVERS FOR SERVICE ME
CHECK DATE: 12/08/2020									
101056 LEAGUE OF MINNESOTA CITIES									
6245		11/17/2020	120820	335883	139.54	12/17/2020	INV	PD	ALLEGED EXCESSIVE FORCE &
CHECK DATE: 12/08/2020									
109320 LEIGHTON HINES, KRIS									
2008988.002		11/23/2020	120820	335949	16.45	12/23/2020	INV	PD	RFD-FAMILY MONLTHY MEMBER
CHECK DATE: 12/08/2020						PAYEE: LEIGHTON HINES, KRISTIN			
109340 LEIGHTON, RUSSELL									
2009055.002		11/23/2020	120820	335950	9.98	12/23/2020	INV	PD	RFD-AOA SGL MONTHLY MEMBE
CHECK DATE: 12/08/2020						PAYEE: LEIGHTON, RUSSELL			
101071 LENZEN CHEVROLET BUICK INC									
81981		11/17/2020	120820	335884	540.30	12/17/2020	INV	PD	#303 TAHOE REPAIR
CHECK DATE: 12/08/2020									
109318 LESHER, MICHAEL									
2008978.002		11/23/2020	120820	335951	16.45	12/23/2020	INV	PD	RFD-FAMILY MONTHLY MEMBER
CHECK DATE: 12/08/2020						PAYEE: LESHER, MICHAEL			
109322 LIDDICOAT, TIM									
2008992.002		11/23/2020	120820	335952	16.45	12/23/2020	INV	PD	RFD-FAMILY MONTHLY MEMBER
CHECK DATE: 12/08/2020						PAYEE: LIDDICOAT, TIM			
109324 LILYA, SCOTT									
2008996.002		11/23/2020	120820	335953	16.45	12/23/2020	INV	PD	RFD-FAMILY MONTHLY MEMBER
CHECK DATE: 12/08/2020						PAYEE: LILYA, SCOTT			
109333 LINT, ERIC									
2009008.002		11/23/2020	120820	335954	16.45	12/23/2020	INV	PD	RFD-FAMILY MONTHLY MEMBER
CHECK DATE: 12/08/2020						PAYEE: LINT, ERIC			
109343 LORENTZ, DAN									
2009072.002		11/23/2020	120820	335955	16.45	12/23/2020	INV	PD	RFD-FAMILY MONTHLY MEMBER

INVOICE	P.O.	INV DATE	CHECK RUN	CHECK #	INVOICE NET	DUE DATE	TYPE	STS	INVOICE DESCRIPTION
CHECK DATE: 12/08/2020						PAYEE: LORENTZ, DAN			
105139 LUBE TECH AND PARTNERS LLC									
1743353		11/16/2020	120820	335885	1,074.09	12/16/2020	INV	PD	FUELS/LUBES MSB SHOP
CHECK DATE: 12/08/2020									
109345 LUCK, JODY									
2009080.002		11/23/2020	120820	335956	16.45	12/23/2020	INV	PD	RFD-FAMILY MONTHLY MEMBER
CHECK DATE: 12/08/2020						PAYEE: LUCK, JODY			
101124 MACQUEEN EQUIPMENT									
P30761		11/02/2020	120820	335886	434.15	12/02/2020	INV	PD	CAMERA TRAILER TOOLS
CHECK DATE: 12/08/2020									
103449 MADDEN GALANTER HANSEN LLP									
84236		11/27/2020	120820	335887	528.00	12/27/2020	INV	PD	OCT LEGAL
CHECK DATE: 12/08/2020									
109331 MARQUARDT, OWEN									
2008732.002		11/19/2020	120820	335957	25.00	12/19/2020	INV	PD	RFD-JUNIOR CURLING CANCEL
CHECK DATE: 12/08/2020						PAYEE: MARQUARDT, OWEN			
107796 DAWN MARIE MARTIN									
84207		11/30/2020	120820	335888	28.08	12/30/2020	INV	PD	ZUMBA INSTRUCTION 11/7
CHECK DATE: 12/08/2020									
101168 MELCHERT HUBERT SJODIN PLLP									
153838		11/12/2020	120820	335889	1,167.65	12/12/2020	INV	PD	GENERAL FUND LEGAL
CHECK DATE: 12/08/2020									
153839		11/12/2020	120820	335889	81.20	12/12/2020	INV	PD	CLUB WEST PARTNERS PURCHA
CHECK DATE: 12/08/2020									
153840		11/12/2020	120820	335889	28.95	12/12/2020	INV	PD	SALE OF PROPERTY TO TRADI
CHECK DATE: 12/08/2020									
153841		11/12/2020	120820	335889	656.20	12/12/2020	INV	PD	GENERAL FUND LEGAL
CHECK DATE: 12/08/2020									
153842		11/12/2020	120820	335889	599.25	12/12/2020	INV	PD	CORTINA WOODS PRESERVATIO
CHECK DATE: 12/08/2020									

INVOICE	P.O.	INV DATE	CHECK RUN	CHECK #	INVOICE NET	DUE DATE	TYPE	STS	INVOICE DESCRIPTION
153843		11/12/2020	120820	335889	1,659.80	12/12/2020	INV	PD	CSAH 44 & HWY 212 PARCEL
CHECK DATE: 12/08/2020									
153844		11/12/2020	120820	335889	772.00	12/12/2020	INV	PD	MISC LEGAL
CHECK DATE: 12/08/2020									
153845		11/12/2020	120820	335889	1,549.00	12/12/2020	INV	PD	HAZELTINE SHORES-PAR 30
CHECK DATE: 12/08/2020									
153846		11/12/2020	120820	335889	1,370.30	12/12/2020	INV	PD	DEL WEBB-HAMMERS PROPERTY
CHECK DATE: 12/08/2020									
153847		11/12/2020	120820	335889	2,591.20	12/12/2020	INV	PD	UNITED PROPERTIES-COSTCO,
CHECK DATE: 12/08/2020									
					10,475.55				
101183 METROPOLITAN COUNCIL									
NOV 2020 SAC		11/30/2020	120820	335890	31,981.95	12/30/2020	INV	PD	NOV SAC CHARGES
CHECK DATE: 12/08/2020									
101196 MID COUNTY COOP #122622									
50613		11/17/2020	120820	335891	95.26	12/30/2020	INV	PD	45 GLS GAS-PAR 30
CHECK DATE: 12/08/2020									
50614		11/17/2020	120820	335891	197.62	12/30/2020	INV	PD	92 GLS WINTER DIESEL-PAR
CHECK DATE: 12/08/2020									
					292.88				
109263 MID-AMERICA GOLF AND LANDSCAPE INC									
2		11/30/2020	120820	335892	162,900.30	12/30/2020	INV	PD	PAR 30 GOLF COURSE IMPROV
CHECK DATE: 12/08/2020									
105998 MILBANK WINWATER WORKS									
167091 04	200219	11/20/2020	120820	335893	1,936.80	12/20/2020	INV	PD	ULTRASONIC 1.5" METERS
CHECK DATE: 12/08/2020									
168163 00	200217	11/20/2020	120820	335893	2,360.01	12/20/2020	INV	PD	MI NODES, WALL BRACKETS &
CHECK DATE: 12/08/2020									
168820 00	200218	11/25/2020	120820	335893	14,187.04	12/25/2020	INV	PD	MI NODES
CHECK DATE: 12/08/2020									
					18,483.85				
104301 MILLERBERND, TOM									

INVOICE	P.O.	INV DATE	CHECK RUN	CHECK #	INVOICE NET	DUE DATE	TYPE	STS	INVOICE DESCRIPTION
2009159.002		11/23/2020	120820	335958	16.45	12/23/2020	INV	PD	RFD-FAMILY MONTHLY MEMBER
CHECK DATE: 12/08/2020									
101227 MINNESOTA ELEVATOR INC									
883792		12/01/2020	120820	335894	405.92	01/01/2021	INV	PD	Dec CCC Elevator Service
CHECK DATE: 12/08/2020									
101276 MINNESOTA VALLEY ELECTRIC COOPERATIVE									
107051510/NOV20		11/23/2020	120320	336009	34.22	12/16/2020	INV	PD	NOV 82ND ST & HWY 41 SIGN
CHECK DATE: 12/03/2020									
778320601/NOV20		11/23/2020	120320	336009	99.20	12/16/2020	INV	PD	NOV CHEVALLE LIFT STATION
CHECK DATE: 12/03/2020									
780272000/NOV20		11/23/2020	120320	336009	10.80	12/16/2020	INV	PD	NOV CHEVALLE IRRIGATION B
CHECK DATE: 12/03/2020									
					144.22				
109316 MISGEN, JEFF									
2009180.002		11/23/2020	120820	335959	16.45	12/23/2020	INV	PD	RFD-FAMILY MONTHLY MEMBER
CHECK DATE: 12/08/2020						PAYEE: MISGEN, JEFF			
101341 MINNESOTA DEPT OF LABOR & INDUSTRY									
NOVEMBER0190352020		11/30/2020	120820	335895	2,330.17	12/30/2020	INV	PD	NOV PERMIT SURCHARGES
CHECK DATE: 12/08/2020									
101351 MN DEPARTMENT OF TRANSPORTATION									
P00012664		11/19/2020	120820	335896	1,543.43	12/19/2020	INV	PD	INTERCHANGE-MATERIAL TEST
CHECK DATE: 12/08/2020									
105000 MOLLMAN, ANNIE									
2009194.002		11/23/2020	120820	335960	16.45	12/23/2020	INV	PD	RFD-FAMILY MONTHLY MEMBER
CHECK DATE: 12/08/2020						PAYEE: MOLLMAN, ANNIE			
106198 NAVIANT INC									
0141885-IN		12/01/2020	120820	335898	2,955.00	12/21/2020	INV	PD	NOV ONBASE HOSTING FEE
CHECK DATE: 12/08/2020									
107873 STACEY NELSON KUMAR									

INVOICE	P.O.	INV DATE	CHECK RUN	CHECK #	INVOICE NET	DUE DATE	TYPE	STS	INVOICE DESCRIPTION
2009296.002 CHECK DATE: 12/08/2020		11/23/2020	120820	335961	16.45	12/23/2020	INV	PD	RFD-FAMILY MONTHLY MEMBER
102654 NORTH AMERICAN SAFETY INC									
INV54132 CHECK DATE: 12/08/2020		11/03/2020	120820	335899	420.00	12/03/2020	INV	PD	S/W LOCATING PAINT
INV54347 CHECK DATE: 12/08/2020		11/13/2020	120820	335899	255.92	12/13/2020	INV	PD	PPE (HARD HATS & GLASSES)
INV54552 CHECK DATE: 12/08/2020		11/24/2020	120820	335899	98.00	12/24/2020	INV	PD	SHOE COVERS-BLDG INSPECTI
					773.92				
101436 NUCO2 INC									
64788851 CHECK DATE: 12/08/2020		12/01/2020	120820	335900	169.56	01/01/2021	INV	PD	Pool Chemicals
64907175 CHECK DATE: 12/08/2020		11/27/2020	120820	335900	51.13	12/27/2020	INV	PD	Pool Chemicals
					220.69				
101445 OFFICE DEPOT									
138311389001-1 CHECK DATE: 12/08/2020		11/18/2020	120820	335901	9.59	12/19/2020	INV	PD	2021 Calendar for Wendy
138311389001-2 CHECK DATE: 12/08/2020		11/18/2020	120820	335901	41.56	12/19/2020	INV	PD	2021 Calendars for Kelly,
138311389001-3 CHECK DATE: 12/08/2020		11/18/2020	120820	335901	4.79	12/19/2020	INV	PD	2021 calendar for Matt B
138311389001-4 CHECK DATE: 12/08/2020		11/18/2020	120820	335901	28.78	12/19/2020	INV	PD	2021 Calendars for Denise
					84.72				
107499 OLD NATIONAL BANK									
84219 CHECK DATE: 12/08/2020		11/13/2020	120820	335902	54.00	12/15/2020	INV	PD	Invoice for a subpoena IC
101456 OLSEN FIRE PROTECTION									
024437 CHECK DATE: 12/08/2020		11/06/2020	120820	335903	780.00	12/06/2020	INV	PD	ANNUAL FIRE ALARM SYS MAI

INVOICE	P.O.	INV DATE	CHECK RUN	CHECK #	INVOICE NET	DUE DATE	TYPE	STS	INVOICE DESCRIPTION
109403 PETERS, GREGG									
2009383.002		11/23/2020	120820	335962	16.45	12/23/2020	INV	PD	RFD NOV MEMBERSHIP
CHECK DATE: 12/08/2020						PAYEE: PETERS, GREGG			
109407 PETERS, HEIDI									
2009402.002		11/23/2020	120820	335963	21.98	12/23/2020	INV	PD	RFD NOV MEMBERSHIP
CHECK DATE: 12/08/2020						PAYEE: PETERS, HEIDI			
109404 PETERSEN, BRAD									
2009384.002		11/23/2020	120820	335964	16.45	12/23/2020	INV	PD	RFD NOV MEMBERSHIP
CHECK DATE: 12/08/2020						PAYEE: PETERSEN, BRAD			
109405 PETERSON, ROSS									
2009387.002		11/23/2020	120820	335965	16.45	12/23/2020	INV	PD	RFD NOV MEMBERSHIP
CHECK DATE: 12/08/2020						PAYEE: PETERSON, ROSS			
109419 PHANDANOUVONG, VICTOR									
2009436.002		11/23/2020	120820	335966	10.42	12/23/2020	INV	PD	RFD NOV MEMBERSHIP
CHECK DATE: 12/08/2020									
109406 PINTO, ANA									
2009395.002		11/23/2020	120820	335967	16.45	12/23/2020	INV	PD	RFD NOV MEMBERSHIP
CHECK DATE: 12/08/2020						PAYEE: PINTO, ANA			
109420 POLAK, JOE									
2009438.002		11/23/2020	120820	335968	10.42	12/23/2020	INV	PD	RFD NOV MEMBERSHIP
CHECK DATE: 12/08/2020						PAYEE: POLAK, JOE			
109411 PRAGALSINGH, SATISH									
2009413.002		11/23/2020	120820	335969	16.45	12/23/2020	INV	PD	RFD NOV MEMBERSHIP
CHECK DATE: 12/08/2020						PAYEE: PRAGALSINGH, SATISH			
109413 PRATER, JEFF									
2009416.002		11/23/2020	120820	335970	16.45	12/23/2020	INV	PD	RFD NOV MEMBERSHIP
CHECK DATE: 12/08/2020						PAYEE: PRATER, JEFF			
101569 PREMIER PYROTECHNICS									

INVOICE	P.O.	INV DATE	CHECK RUN	CHECK #	INVOICE NET	DUE DATE	TYPE	STS	INVOICE DESCRIPTION
0016258		12/02/2020	120820	335904	12,000.00	12/07/2020	INV	PD	JULY 4TH FIREWORKS
CHECK DATE: 12/08/2020									
109414 PRITCHARD, SCOTT									
2009419.002		11/23/2020	120820	335971	16.45	12/23/2020	INV	PD	RFD NOV MEMBERSHIP
CHECK DATE: 12/08/2020						PAYEE: PRITCHARD, SCOTT			
109415 QUERNEMOEN, TIMOTHY									
2009424.002		11/23/2020	120820	335972	16.45	12/23/2020	INV	PD	RFD NOV MEMBERSHIP
CHECK DATE: 12/08/2020						PAYEE: QUERNEMOEN, TIMOTHY			
109412 RAIN, DARRIN									
2009415.002		11/23/2020	120820	335973	21.98	12/23/2020	INV	PD	RFD NOV MEMBERSHIP
CHECK DATE: 12/08/2020						PAYEE: RAIN, DARRIN			
102495 RANDYS LANDSCAPE PLUS LLC									
8923		11/20/2020	120820	335905	462.50	12/20/2020	INV	PD	BAVARIAN SHORES MANHOLE I
CHECK DATE: 12/08/2020									
109417 RAUKAR, PAUL									
2009430.002		11/23/2020	120820	335974	16.45	12/23/2020	INV	PD	RFD NOV MEMBERSHIP
CHECK DATE: 12/08/2020						PAYEE: RAUKAR, PAUL			
109421 REICHERT, TRACEY									
2009441.002		11/23/2020	120820	335975	10.42	12/23/2020	INV	PD	RFD NOV MEMBERSHIP
CHECK DATE: 12/08/2020						PAYEE: REICHERT, TRACEY			
109423 RICARD, ERIC									
2009448.002		11/23/2020	120820	335976	16.45	12/23/2020	INV	PD	RFD NOV MEMBERSHIP
CHECK DATE: 12/08/2020						PAYEE: RICARD, ERIC			
109426 RIEF, NICOLE									
2009462.002		11/23/2020	120820	335977	16.45	12/23/2020	INV	PD	RFD NOV MEMBERSHIP
CHECK DATE: 12/08/2020						PAYEE: RIEF, NICOLE			
109425 RIES, WILLIAM									

INVOICE	P.O.	INV DATE	CHECK RUN	CHECK #	INVOICE NET	DUE DATE	TYPE	STS	INVOICE DESCRIPTION
2009457.002		11/23/2020	120820	335978	10.42	12/23/2020	INV	PD	RFD NOV MEMBERSHIP
CHECK DATE: 12/08/2020						PAYEE: RIES, WILLIAM			
109427 RIOS, YEFRI									
2009463.002		11/23/2020	120820	335979	16.45	12/23/2020	INV	PD	RFD NOV MEMBERSHIP
CHECK DATE: 12/08/2020						PAYEE: RIOS, YEFRI			
109428 RISCH, PETER									
2009464.002		11/23/2020	120820	335980	10.42	12/23/2020	INV	PD	RFD NOV MEMBERSHIP
CHECK DATE: 12/08/2020						PAYEE: RISCH, PETER			
109429 RISTAU, STEVE									
2009465.002		11/23/2020	120820	335981	16.45	12/23/2020	INV	PD	RFD NOV MEMBERSHIP
CHECK DATE: 12/08/2020						PAYEE: RISTAU, STEVE			
109317 ROAN, ELLEN									
2009469.002		11/23/2020	120820	335982	16.45	12/23/2020	INV	PD	RFD-FAMILY MONTHLY MEMEBE
CHECK DATE: 12/08/2020						PAYEE: ROAN, ELLEN			
101668 ROBBS ELECTRIC INC									
37093		10/13/2020	120820	335906	550.00	12/01/2020	INV	PD	Added 2 Light Fixures out
CHECK DATE: 12/08/2020									
109431 ROBERTS, PAMELA									
2009474.002		11/23/2020	120820	335983	16.45	12/23/2020	INV	PD	RFD NOV MEMBERSHIP
CHECK DATE: 12/08/2020						PAYEE: ROBERTS, PAMELA			
109416 ROLLOFF, TAMMY									
2009427.002		11/25/2020	120820	335984	21.98	12/23/2020	INV	PD	RFD NOV MEMBERSHIP
CHECK DATE: 12/08/2020						PAYEE: ROLLOFF, TAMMY			
101696 RYAN CONTRACTING CO									
52492100-5		11/24/2020	120820	335907	198,068.06	12/24/2020	INV	PD	2020 DT RECONSTRUCTION
CHECK DATE: 12/08/2020									
109418 SCHARFENBERG, STEVE									
2009435.002		11/23/2020	120820	335985	21.98	12/23/2020	INV	PD	RFD NOV MEMBERSHIP

INVOICE	P.O.	INV DATE	CHECK RUN	CHECK #	INVOICE NET	DUE DATE	TYPE	STS	INVOICE DESCRIPTION
CHECK DATE: 12/08/2020						PAYEE: SCHARFENBERG, STEVE			
109116 SCHNEIDER EXCAVATING AND GRADING INC									
SE2291		11/20/2020	120820	335908	2,672.50	12/20/2020	INV	PD	COLUMBIA CT WATER MAIN RE
CHECK DATE: 12/08/2020									
109422 SHEPPARD, SUE									
2009446.002		11/23/2020	120820	335986	21.98	12/23/2020	INV	PD	RFD NOV MEMBERSHIP
CHECK DATE: 12/08/2020						PAYEE: SHEPPARD, SUE			
105388 SHRED-IT US HOLDCO INC									
8180849123		11/15/2020	120820	335909	91.22	12/15/2020	INV	PD	Shredding-PD
CHECK DATE: 12/08/2020									
101914 SOUTHWEST METRO CHAMBER OF COMMERCE									
322472		11/16/2020	120820	335910	1,571.00	12/16/2020	INV	PD	MEMBER INVESTMENT
CHECK DATE: 12/08/2020									
109252 STAFFANSON, LISA									
2009662.002		11/23/2020	120820	335987	7.66	12/23/2020	INV	PD	RFD-YOUTH SINGLE MONTHLY
CHECK DATE: 12/08/2020						PAYEE: STAFFANSON, LISA			
107185 STEDMAN, MARY									
2009261.002		11/23/2020	120820	335988	9.98	12/23/2020	INV	PD	RFD-AOA SGL MONTHLY
CHECK DATE: 12/08/2020									
101888 STREICHERS									
I1463014		11/05/2020	120820	335911	34.99	12/05/2020	INV	PD	Bengtson-Initial Issue-Ha
CHECK DATE: 12/08/2020									
101892 STUART C IRBY CO									
S011845879.011	200215	11/19/2020	120820	335912	1,472.00	12/19/2020	INV	PD	TRN UG 10KVA # 601-1907
CHECK DATE: 12/08/2020									
103677 SUN LIFE ASSURANCE COMPANY OF CANADA									
237741/DEC20		11/20/2020	120320	336010	3,767.45	12/20/2020	INV	PD	DEC EMP LIFE INS PREMIUMS
CHECK DATE: 12/03/2020									

INVOICE	P.O.	INV DATE	CHECK RUN	CHECK #	INVOICE NET	DUE DATE	TYPE	STS	INVOICE DESCRIPTION
109319 SWEET, LORIE									
2008979.002		11/23/2020	120820	335989	16.45	12/23/2020	INV	PD	RFD-FAMILY MONTHLY MEMBER
CHECK DATE: 12/08/2020						PAYEE: SWEET, LORIE			
109321 TESTER, CHRISTINA									
2008989.002		11/23/2020	120820	335990	16.45	12/23/2020	INV	PD	RFD-FAMILY MONTHLY MEMBER
CHECK DATE: 12/08/2020						PAYEE: TESTER, CHRISTINA			
101831 SPECIALIZED ENVIRONMENTAL TECHNOLOGIES INC									
105009201		11/03/2020	120820	335913	372.00	12/03/2020	INV	PD	COMPOST WINKLE PARK/B. BA
CHECK DATE: 12/08/2020									
109326 THOMAS, TERESA									
2008707.002		11/19/2020	120820	335991	25.00	12/19/2020	INV	PD	RFD-LEARN TO CURL CANCELL
CHECK DATE: 12/08/2020						PAYEE: THOMAS, TERESA			
108737 THUL, LINDSAY									
2009000.002		11/23/2020	120820	335992	16.45	12/23/2020	INV	PD	RFD-FAMILY MONTHLY MEMBER
CHECK DATE: 12/08/2020						PAYEE: THUL, LINDSAY			
109332 TOLLBERG, KERI									
2009007.002		11/23/2020	120820	335993	16.45	12/23/2020	INV	PD	RFD-FAMILY MONTHLY MEMBER
CHECK DATE: 12/08/2020						PAYEE: TOLLBERG, KERI			
103946 TRANSUNION RISK AND ALTERNATIVE DATA SOLUTIONS INC									
1549467/NOV20		12/01/2020	120820	335914	125.30	01/15/2021	INV	PD	Data Processing
CHECK DATE: 12/08/2020									
109335 TRUAX, MIKE									
2009022.002		11/23/2020	120820	335994	16.45	12/23/2020	INV	PD	RFD-FAMILY MONTHLY MEMBER
CHECK DATE: 12/08/2020						PAYEE: TRUAX, MIKE			
109313 TRUSEAL AMERICA LLC									
1036438		11/23/2020	120820	335915	1,600.00	12/01/2020	INV	PD	REPAIR TO CURB NEIGHBORHO
CHECK DATE: 12/08/2020									

INVOICE	P.O.	INV DATE	CHECK RUN	CHECK #	INVOICE NET	DUE DATE	TYPE	STS	INVOICE DESCRIPTION
109337 TURNER, GREG									
2009033.002		11/23/2020	120820	335995	16.45	12/23/2020	INV	PD	RFD-FAMILY MONTHLY MEMBE
CHECK DATE: 12/08/2020						PAYEE: TURNER, GREG			
109338 TYLER, ANNA									
2009038.002		11/23/2020	120820	335996	16.45	12/23/2020	INV	PD	RFD-FAMILY MONTHLY MEMBER
CHECK DATE: 12/08/2020						PAYEE: TYLER, ANNA			
102037 ULINE INC									
127116629		11/24/2020	120820	335916	33.81	12/24/2020	INV	PD	Refill for eye wash stati
CHECK DATE: 12/08/2020									
105730 PROVIDENT LIFE & ACCIDENT INSURANCE COMPANY									
E0665216-NOV20		11/23/2020	120320	336011	674.28	12/23/2020	INV	PD	NOV EMP INS PREMIUMS
CHECK DATE: 12/03/2020									
102051 UPS									
000027V7Y7460		11/14/2020	120320	336012	73.80	11/25/2020	INV	PD	TC SHIPPING
CHECK DATE: 12/03/2020									
107745 US BANK NATIONAL ASSOCIATION									
429343700		11/20/2020	120320	336013	439.53	12/15/2020	INV	PD	CCC COLOR COPIER LEASE PM
CHECK DATE: 12/03/2020									
109341 VANGEN, AMBER LEA									
2009065.002		11/23/2020	120820	335997	16.45	12/23/2020	INV	PD	RFD-FAMILY MONTHLY MEMBER
CHECK DATE: 12/08/2020						PAYEE: VANGEN, AMBER LEA			
109344 VENUGOPAL, VEERAKUMA									
2009078.002		11/23/2020	120820	335998	16.45	12/23/2020	INV	PD	RFD-FAMILY MONTHLY MEMBER
CHECK DATE: 12/08/2020						PAYEE: VENUGOPAL, VEERAKUMAR			
102102 VERIZON WIRELESS									
9867649656		11/23/2020	120320	336014	624.46	12/15/2020	INV	PD	NOV CRADLEPOINTS
CHECK DATE: 12/03/2020									

INVOICE	P.O.	INV DATE	CHECK RUN	CHECK #	INVOICE NET	DUE DATE	TYPE	STS	INVOICE DESCRIPTION
102104 VESSCO INC									
81804		11/13/2020	120820	335917	440.68	12/13/2020	INV	PD	CHLORINE FEED TUBING
CHECK DATE: 12/08/2020									
109346 VOLLBRECHT, ERIC									
2009083.002		11/23/2020	120820	335999	16.45	12/23/2020	INV	PD	RFD-FAMILY MONTHLY MEMBER
CHECK DATE: 12/08/2020						PAYEE: VOLLBRECHT, ERIC			
109171 WACKERFUSS, ANDREA									
2009682.002		11/23/2020	120820	336000	7.66	12/23/2020	INV	PD	RFD-YOUTH SGL MONTHLY MEM
CHECK DATE: 12/08/2020						PAYEE: WACKERFUSS, ANDREA			
102133 WAGNER PRESS & GRAPHICS									
33581		11/23/2020	120820	335918	172.00	12/08/2020	INV	PD	#9 Return Regular Envelop
CHECK DATE: 12/08/2020									
109103 WALSH, CYNTHIA									
2009617.002		11/23/2020	120820	336001	10.42	12/23/2020	INV	PD	RFD-ADULT SGL MEMBERSHIP
CHECK DATE: 12/08/2020						PAYEE: WALSH, CYNTHIA			
102143 WATER CONSERVATION SERVICES INC									
10845		11/27/2020	120820	335919	445.15	12/12/2020	INV	PD	COLUMBIA COURT LEAK LOCAT
CHECK DATE: 12/08/2020									
102160 WELLS FARGO BANK MINNESOTA NA									
1903427		10/29/2020	120320	336015	500.00	11/28/2020	INV	PD	REDEMPTION FEE FOR 2010D
CHECK DATE: 12/03/2020									
102166 WESCO DISTRIBUTION INC									
480779	200222	11/23/2020	120820	335920	732.09	12/23/2020	INV	PD	(3) OH SWITCH 900AMP SGL
CHECK DATE: 12/08/2020									
109315 WINFIELD, BRIAN									
2009865.002		11/23/2020	120820	336002	7.66	12/23/2020	INV	PD	RFD-AOA 55+ MONTHLY MEMBE
CHECK DATE: 12/08/2020						PAYEE: WINFIELD, BRIAN			
109424 WINTERS, AMY									

INVOICE	P.O.	INV DATE	CHECK RUN	CHECK #	INVOICE NET	DUE DATE	TYPE	STS	INVOICE DESCRIPTION
2009455.002		11/23/2020	120820	336003	21.98	12/23/2020	INV	PD	RFD NOV MEMBERSHIP
CHECK DATE: 12/08/2020						PAYEE: WINTERS, AMY			
102189 WM MUELLER & SONS									
261999		11/18/2020	120820	335921	108.00	12/25/2020	INV	PD	POTHOLE PATCHING
CHECK DATE: 12/08/2020									
262042		11/19/2020	120820	335921	2,023.20	12/25/2020	INV	PD	PATCHING VICTORIA DRIVE
CHECK DATE: 12/08/2020									
		192 INVOICES			569,028.52				

** END OF REPORT - Generated by Michelle Robbin **

Electronic Payments

12/03/2020 14:17 | City of Chaska | P 1
8482mrob | VENDOR INVOICE LIST | apinvlst

INVOICE	P.O.	INV DATE	CHECK RUN	CHECK #	INVOICE NET	DUE DATE	TYPE	STS	INVOICE DESCRIPTION
100005 MINNESOTA MUNICIPAL MONEY MARKET FUND									
84645 CHECK DATE: 12/01/2020		12/01/2020	120120	2580	3,000,000.00	12/01/2020	DIR	PD	XFER ONB TO 4M-TAX STTLMT
100522 DEPOSITORY TRUST COMPANY									
2020/12/01 DS-INT CHECK DATE: 11/30/2020		11/30/2020	113020	2577	159,000.01	11/30/2020	DIR	PD	DTC-DS PMT DUE 12/1/20-IN
2020/12/01 DS-PRI CHECK DATE: 11/30/2020		11/30/2020	113020	2576	660,000.00	11/30/2020	DIR	PD	DTC-DS PMT DUE 12/1/20-PR
					819,000.01				
101756 MII LIFE INCORPORATED									
39627274 CHECK DATE: 11/27/2020		11/24/2020	112720	2575	408.35	11/27/2020	DIR	PD	11/27/20 FSA REIMBURSEMEN
101498 PCARD									
2020/1112-PC CHECK DATE: 11/30/2020		11/12/2020	113020	2578	38,337.43	11/30/2020	DIR	PD	NOV 2020 PCARD PURCHASES
101525 PITNEY BOWES POSTAGE									
2020/1130-PB CHECK DATE: 12/01/2020		11/30/2020	120120	2579	1,200.00	12/01/2020	DIR	PD	11/30/20 REPLENISH POSTAG
102066 US BANK									
2020/12/01 DS CHECK DATE: 12/01/2020		12/01/2020	120120	2581	22,512.67	12/01/2020	DIR	PD	US B-DS PMT DUE 12/1/20-I
					22,512.67				
		7 INVOICES			3,881,458.46				

** END OF REPORT - Generated by Michelle Robbin **

Biweekly Report
December 7, 2020
By
Matt Podhradsky

UPCOMING COUNCIL MEETING SCHEDULE

December 7th: We will not be having a Work Session on Monday. A reminder that at this meeting we will be having our annual Truth in Taxation Public Hearing. This is a time for us to formally take comments from the public on our proposed tax levy and budget. We do not establish the levy on this date but would do that at our next meeting which is on December 21st.

December 21st: While it is not finalized yet, I would ask that you keep the time between 5:30-7 open for a Work Session. We are currently in the process of seeking public input for the proposed Chicken Ordinance and are looking to be prepared to bring not only a recommended ordinance to discuss but also public feedback we receive from its draft. We will know within the next week whether we will be able to make that date or not. In addition to this, at the Council meeting that night, we will be adopting our Final Budgets for each of our City's operational funds, as well as adopting our final 2021 tax levy and rate changes for our Utilities. This is the last meeting for 2020, so we do have to complete this work on this evening.

We will continue to be holding our meetings as distance meetings via Zoom at least through the month of December because of the large spike in COVID cases in the County. We will be making sure that everyone that has items scheduled before the Council that they are aware of this change, and will have a link on our Web Page for any who are interested in joining in the meeting regardless of having an item on the agenda.

If there are any questions or concerns, please let me know so that we can adjust, as necessary.

RFQ Process-City Square West

As a reminder, we will be holding interviews for the developers who have submitted RFQs for the City Square West Project. As you will remember from last week's meeting, Council members Grau and Hatfield were selected by the Council to be part of this interview process which will occur the upcoming Wednesday December 9th. The first interview will occur at 2 pm with the second interview occurring at 3:30. We also schedule a time at 4:30 to debrief from these interviews and to discuss a recommendation that will come back to the Council for consideration. All three of these sessions will be via zoom with Staff getting out the links to these meetings prior to Wednesday.

As a reminder, it is the plan that we will have a recommendation coming back to the Council at the December 21st meeting, with the hope that we are able to choose a developer at that meeting with whom we would partner with to start putting together the City Square West Redevelopment Project.

If there are any questions about this, please do not hesitate to ask.

Chaska Cares Update

As we go into the month of December, I wanted to let you know about several activities the Chaska Cares Team will be undertaking this month.

- Virtual Birthday Patrols: Back by popular demand, the Police and Fire Departments have worked with Kevin Wright to put together a virtual birthday patrol that we will be providing to resident's requesting this service. This video will be updated weekly with the birthdays of the week being recognized at a specific time every week. While we do think it would be risky to have the officers and fire department personnel going out in person to homes like we did during the May and June timeframe because COVID cases are so high at this time, we hope that this is a good alternative that will excite some of our younger children in the community
- Monthly Food Distribution Event: The monthly food distribution event will take place on Thursday December 17th in the early afternoon down at the former Gedney Pickle site. As with past events, we are looking for volunteers for this event. If you are interested, please let Nate or me know.
- Heroes and Helpers: For almost a decade, this program has brought together families in need during the Holiday season to shop for their family with a Police Officer at Target. This event will once again occur throughout the day of Saturday, December 12th, with this year's event being a little different because of the inability to get everyone together because of COVID. There are approximately 50 families that will be served at this event, with the families having submitted their list already, and the officers shopping on the day of the 12th, along with wrapping the presents. Since we are not able to safely get together the families with the officers for actual shopping this year, Officer Janke is looking at creating a unique delivery to each of the families participating to create some kind of connection between our Police Officers and the participating families. If you are interested in volunteering this day, please let me know.
- Toys for Tots: The Chaska Community Center is serving as a drop off location for the local Toys for Tots drive this year. The toys collected here in Chaska will go directly to families in our immediate area with many being from Chaska. Toy drop off should occur before December 12th.

A big Thank you to all our staff who have worked on planning our Chaska Cares initiatives. If you have any questions on this, please do not hesitate to ask.

Oakridge Redevelopment Site

With our 90 days to take action on the Oakridge Redevelopment Site expiring just before Christmas, I wanted to provide the Council with an update on where things are in that development process. This past week, we did receive a request from the developer of that site requesting that we extend the process until at least February. Without a formal request from the developer to extend, Cities are required by State Statute to act on the application whether it is ready or not.

With there still being several key items that the developer is having to work on with this site, including traffic analysis and storm water management, they have indicated that they need

additional time to work through these details before the application will be fully ready to consider before the Council.

As we do get questions on this development project, I wanted to make sure the Council was aware of this extension request. If you should have any questions regarding this, please let me know.

Update on "The Loop"

I am pleased to share that this has been a fantastic fall to be working on the reconstruction of the Par 30 into "The Loop" with the contractor expecting to be working right up until December 18th. With this long work season this fall, the contractor will be able to get done all major grading work they had hoped this fall and are now moving into the storm sewer and Water/Sewer utility installation on the site. Given the progress, we do feel that we are well on schedule to be able to meet our goal of having the course seeded by late summer/early fall. This will allow us to stay on schedule to open the course in early 2022. After site work has been completed this fall, you will see utilities get disconnected from the old clubhouse building in early January, with demolition of that building taking place shortly thereafter.

If there are any questions on this project, please do not hesitate to ask.