Work Session
Updates on Hwy 41 Project through Downtown
from Project Team
6:00 to 7:00 PM

AGENDA
CHASKA CITY COUNCIL
CHASKA CITY HALL - COUNCIL CHAMBERS & ZOOM
Monday, April 04, 2022
7:00 PM

1. Call to Order

2. Pledge of Allegiance

3. Roll Call

4. Adopt Agenda

5. Visitor Presentation

6. Approve Previous Meeting Minutes

    6.A. Approve the March 7, 2022 City Council Meeting Minutes

    6.B. Approve the March 21, 2022 City Council Meeting Minutes

7. Consent Items

    7.A. Adopt Resolution 2022-34, Approving the Lot Split for 3985 Big Woods Boulevard/DR Horton/PC #2022-22

    7.B. Adopt Ordinance 1013, Amend & Reenact Ordinance 1012 Chapter 2, Article 8, Sections 10 and 20 of the Chaska MN Code of Ordinances - Ward Boundaries and Polling Locations

    7.C. Approve Transient Accommodation Renewals

    7.D. Adopt Resolution 2022-31, 2022 Overlay Program

7.E. Adopt Resolution 2022-32, Amending 2021 Fund Budgets

7.F. Letter of Appreciation - Congressionally Directed Spending Southwest Chaska Sewer Extension

7.G. Letters of Support - State Funding for Various County Projects

7.H. Adopt Resolution 2022-35, Authorizing Bank Account Signers and Authorization of Electronic Funds Transfer

7.I. Approve Establishing Budget for the Loop Clubhouse and Maintenance Building

7.J. Adopt Resolution 2022-36, Approving Construction Plans and Authorizing Bids for 2022 Downtown Street Reconstruction Project

7.K. Adopt Resolution 2022-37, Award Bid for Creek Road Trunk Sewer Extension Street and Utility Improvements Phase 4

7.L. Adopt Resolution 2022-38, Easement Acquisition for Creek Road Trunk Sewer Extension Street & Utility Improvements

8. Action Items

8.A. Adopt Resolution 2022-33, Public Hearting on Approval and Consent to Conduit Debt Issuance – Southwest Christian High School

8.B. Chaska Water Tower Logo Discussion

9. Bills

9.A. ACCOUNTS PAYABLE COUNCIL ROSTER 4-4-2022

10. Other Business

10.A. City Administrator's Report

10.A.i. Biweekly 4-4-2022

11. Adjourn

Chaska Economic Development Authority Meeting
Immediately following City Council

DRAFT

- MINUTES -
CHASKA CITY COUNCIL
MARCH 7, 2022

1. Call to Order
The meeting was called to order by Mayor Windschitl at 7:00 pm.

2.Pledge of Allegiance

3. Roll Call
Roll call was taken. Present: Councilmembers Grau, Hatfield, Hubbard, Huang, and Mayor Windschitl

Absent: None.

Also Present: Matt Podhradsky, City Administrator; Noel Graczyk, Administrative Services Director; Kevin Wright, Communication Director; Elise Durbin, Assistant Administrator; Parks and Recreation Director Marshall Grange; Nate Kabat, Community Development Director; Liz Hanson, City Planner; City Attorney; and City Engineer Matt Clark.

4. Adopt the Agenda
Motion by Councilmember Hubbard second by Councilmember Hatfield to adopt the agenda with the noted correction. Motion carried.

5. Visitor Presentation
None.

6. Consent Agenda
Motion by Councilmember Grau, second by Councilmember Huang to approve the Consent Agenda Items A through B:

A. Adopt Resolution 2022-20, Ending a Local Emergency Declaration

Motion to Adopt Resolution 2022-20, Ending a Local Emergency Declaration.

B. Adopt Resolution 2022-21, Accepting the Feasibility Study for Creek Road Trunk Sewer Extension Street & Utility Improvements-Phase 4

Motion to Adopt Resolution 2022-21, Accepting the Feasibility Study for Creek Road Trunk Sewer Extension Street & Utility Improvements-Phase.
Motion carried.

7. Action Items
7.A. Student Commissioner Appointment
City Administrator Podhradsky introduced this item. He noted they are recommending that the Council choose one of the three candidates.

DRAFT

Motion by Councilmember Hubbard, second by Councilmember Hatfield to appoint Roda Hassan as the Student Commissioner to the Parks and Recreation Commission for the term of March 7, 2022 to December 31, 2022.
Motion carried.

8. Bills
8.A. Accounts Payable Council Roster 3-7-2022

Council requested further information on page 5 and 10.

City Administrator Podhradsky provided further information regarding those bills.

Motion by Councilmember Huang, second by Councilmember Hubbard to approve the bills as presented. Roll call was taken. Voting aye: Councilmembers Grau, Hatfield, Hubbard, Huang, and Mayor Windschitl. Voting nay: None
Motion carried.

9. Other Business
9.A. City Administrator's Report
9.A.i. Bi-Weekly Report March 7, 2022

9.B. Hawk Pride Recap

Councilmember Hatfield:
- Nothing at this time

Councilmember Hubbard:
- Stated there is a food distribution on March 17th 12pm-1:30pm at the old Gedney Site

Councilmember Grau:
- Stated relating to Christmas in May, he wants to make sure people who need help or know someone who could use help reach out and complete an application, he noted he knows it isn't always easy to ask for help but they are there for that reason

Councilmember Huang:
- Noted May 11th is the Taste of Chaska in Square Park
- Provided the Hawk Pride Recap

Assistant City Administrator Durbin:
- Nothing at this time

City Administrator Podhradsky:
- Stated Chaska High School has brought back a Curling Team and they are competing in the State Championships this year

DRAFT

- Noted his favorite teacher from school passed away recently and wanted to thank teachers who make a great impact on students' lives and for not forgetting about them after they walk out the door

Mayor Windschitl:

- Stated the impact the interchange on 212/44 will have on the City will be amazing even though it won't be done for several years
- Next meeting is on back to a normal meeting schedule for the Council meetings are March 21st and April 1st

11. Adjourn

Motion by Councilmember Huang, second by Councilmember Hubbard to adjourn the meeting at 7:19 pm.
Motion carried.

DRAFT

- MINUTES -
CHASKA CITY COUNCIL
MARCH 21, 2022

1. Call to Order
The meeting was called to order by Mayor Windschitl at 7:00 pm.

2. Pledge of Allegiance

3. Roll Call
Roll call was taken. Present: Councilmembers Grau, Hatfield, Hubbard, Huang, and Mayor Windschitl

Absent: None.

Also Present: Matt Podhradsky, City Administrator; Noel Graczyk, Administrative Services Director; Kevin Wright, Communication Director; Elise Durbin, Assistant Administrator; Parks and Recreation Director Marshall Grange; Nate Kabat, Community Development Director; Liz Hanson, City Planner; City Attorney; and City Engineer Matt Clark.

4. Adopt the Agenda
Mayor Windschitl requested moving Item 8.F. to 8.A.

Motion by Mayor Windschitl, second by Councilmember Huang to adopt the agenda with the noted change.
Motion carried.

5. Visitor Presentation
None.

6. Minutes

6.A. Approve February 28, 2022 City Council Meeting Minutes
Motion by Councilmember Hubbard, second by Councilmember Grau to approve the minutes of the February 28, 2022 City Council meeting.
Motion carried.

7. Consent Agenda
Motion by Councilmember Huang, second by Councilmember Hatfield to approve the Consent Agenda Items A through G:

A. Adopt Resolution 2022-22, Approving the Final Site & Building Plan for 212 Medical Center/Ridgeview Medical Center/PC #2022-13

Motion to approve Adopt Resolution 2022-22, Approving the Final Site & Building Plan for 212 Medical Center/Ridgeview Medical Center/PC #2022-13.

DRAFT

B. Adopt Resolution 2022-26, Approving the Annexation into Chaska of a portion of the Kelzer property currently in Laketown Township, per the Orderly Annexation Agreement

Motion to Adopt Resolution 2022-26, Approving the Annexation into Chaska of a portion of the Kelzer property currently in Laketown Township, per the Orderly Annexation Agreement.

C. Adopt Resolution 2022-27, Bond Sale Reimbursement

Motion to Adopt Resolution 2022-27, Bond Sale Reimbursement.

D. Adopt Resolution 2022-28, Interfund Tax-Increment Project Financing

Motion to Adopt Resolution 2022-28, Interfund Tax-Increment Project Financing.

E. Use of ARPA Funds

Motion to approve use of ARPA Funds.

F. Letter of Support - State Funding for Northern Ravine Trail

Motion to approve Letter of Support - State Funding for Northern Ravine Trail.

G. Letter of Support - US HWY 212 Freight Mobility and Safety Project

Motion to approve Letter of Support - US HWY 212 Freight Mobility and Safety Project.

Motion carried.

8. Action Items

8.F. Adopt Resolution 2022-30, Public Improvement Hearing for the 2022 Street & Utility Reconstruction Project

City Administrator Podhradsky introduced this item.

City Engineer Clark provided background and a presentation on this item. He noted this has been a long project spanning over the past 10 years.

City Administrator Podhradsky stated this has to be done this summer or it will have to wait until next summer so they aren't doing work while the detour is happening on Yellow Brick Road.

Councilmember Hatfield asked if they are committed to having five units on the lot across the street if they approve it tonight.

City Engineer Clark stated approving this tonight doesn't commit them to doing five lots.

City Administrator Podhradsky stated what will determine what goes on the lots will be up to the Council's final approval, they are not committed to anything right now.

Councilmember Hatfield asked if they will have sidewalks on both sides of Maple Street and 6th Street. She stated it feels like the houses are very close to the street and wants to make sure they are consulted on the process.

City Engineer Clark stated it is very tight and they have been in contact with the owners of the houses in that area and will continue to work with them as the project develops.

Mayor Windschitl opened the Public Hearing on this item for public comment at 7:40pm.

DRAFT

Brad Hedman, 520 East 5th Street, addressed the Council. He asked if the new sewer system will be tying into the one in front of their house. His concern is that the tar is already cracking there and it will get worse if that is what they plan to do.

City Engineer Clark stated they will be tying into the existing sewer but they will be replacing any damage along Beech Street.

Barb Moran, 507 N. Maple Street, addressed the Council. She stated she appreciates the improvements being made but would like to know if they need to make the determination on the lots across the street tonight.

City Administrator Podhradsky stated not tonight, they still have several steps in the process before anything on those lots will have to be decided.

Mayor Windschitl closed the Public Hearing on this item at 7:46pm.

Motion by Councilmember Hatfield, second by Councilmember Huang to Adopt Resolution 2022-30, Public Improvement Hearing for the 2022 Street & Utility Reconstruction Project approve the Purchase Agreement for the purchase of the property at 216 4th Street West.
Motion carried.

8.A. Adopt Ordinance 1012, Amend Chapter 2, Article 8, Sections 10 and 20 of the Chaska MN Code of Ordinances - Ward Boundaries and Polling Locations
City Administrator Podhradsky introduced this item.

Community Development Director Kabat provided background and a presentation on this item.

Councilmember Hatfield stated it is very important that people know where they need to go to vote, and wants to make sure they make that as clear as possible.

City Administrator Podhradsky stated anyone impacted by the ward changes will receive a notice in the mail indicating that their polling place has changed. He also noted that they will do a campaign as it gets closer to voting to ensure everyone knows where they are supposed to vote.

Councilmember Hatfield asked if the accessibility is taken into consideration when they assign polling locations.

Community Development Director Kabat stated they do follow regulations making sure there are ADA polling options and parking for handicap outside the polls.

Councilmember Hubbard asked if at voting time there is a long line outside, will there be anyone saying which ward it is so no one is wasting time in line at the wrong location.

Community Development Director Kabat stated they usually have a table where people can check it is the correct voting location prior to getting in line for that purpose.

DRAFT

Councilmember Hubbard noted that although it is being voted on tonight, this isn't something that if people disagree with it, it can't be address for another 10 years, it can be brought up at any point and is a community wide discussion because it is so impactful for everyone.

Motion by Councilmember Hubbard, seconded by Councilmember Grau, to Adopt Ordinance 1012, Amend Chapter 2, Article 8, Sections 10 and 20 of the Chaska MN Code of Ordinances - Ward Boundaries and Polling Locations.
Motion carried.

8.B. Adopt Resolution 2022-23 and Ordinance 1009, Approving the Preliminary Site & Building Plan, Preliminary Plat and Rezoning for Chaska Creek Industrial Phase 3/Oppidan/PC #2022-14
City Administrator Podhradsky introduced this item.

City Planner Hanson provided a presentation and overview of this item.

Mayor Windschitl stated he likes the rendering shown and that it includes screening because that was a concern initially but they seem to have addressed that issue for the neighbors.

Councilmember Grau stated he agrees with Mayor Windschitl regarding the screening.
He stated he wants to make sure they continue to discuss what will be put in to the west of the property.

City Administrator Podhradsky stated they are trying to come up with a plan that ensures no one gets left behind but there it is problematic because not everyone agrees with what should go there, and they will continue conversations with the owners around there to come up with a solution.

Councilmember Hubbard asked if there are restrictions on what hours they can load and unload due to noise.

City Administrator Podhradsky stated they are regulated by the state noise guidelines which they will need to follow.

Jay Moore with Oppidan addressed the Council. He stated they plan to start construction on July 1, 2022. Phase one will be completed in June, Phase two in November and Phase 3 in the summer of 2023 and they plan to open each building as they are completed.

Motion by Councilmember Huang, second by Councilmember Hatfield, to adopt Resolution No. 2022-23 approving the Preliminary Site & Building Plan and Preliminary Plat for Chaska Creek Industrial Phase 3 (PC #2022-14).
Motion carried.

Motion by Councilmember Hubbard, second by Councilmember Huang, to Motion to adopt Ordinance No. 1009 approving the rezoning for Chaska Creek Industrial Phase 3 from Rural Residential (RR-2) and Open (O) zoning districts to Planned Industrial District No. 10 (PID-10).

DRAFT

Motion carried.

8.C. Adopt Resolution 2022-24 and Ordinance 1010, Approving the Preliminary Plat and Rezoning for Ensconced Woods/Johnson-Reiland Builders and Remodelers/PC #2022-17
City Administrator Podhradsky introduced this item.

City Planner Hanson provided a presentation on this item and reviewed the Concept Plan.

Gary Ross, 363 Founders Path, addressed the Council. He stated they have had to chase down construction workers and buses to tell them to stop at the stop sign there. He noted they are only concerned about the heavy earth equipment coming into the area and they are pleased to hear that it will be handled by the association.

Motion by Councilmember Huang, second by Councilmember Grau, to adopt Resolution No. 2022-24 approving the Ensconced Woods Preliminary Plat (PC #2022-17).
Motion carried.

Motion by Councilmember Hubbard, second by Councilmember Hatfield, to adopt Ordinance No. 1010 approving the rezoning for Ensconced Woods from Low Density Residence (R1) and Open (O) to Planned Residential District No.81 (PRD-81).
Motion carried.

8.D. Adopt Resolution 2022-25 and Ordinance 1011, Approving the Preliminary Plat and Rezoning for Rivertown Heights/DR Horton/PC #2022-16
City Administrator Podhradsky introduced this item.

Gary Ross, 363 Founders Path, addressed the Council. He asked if they could put a 4-way-stopsign at Founders Path and Percheron Blvd. noting that would slow the traffic in that area if they can. He asked if cost was the reason they haven't extended Savanah Way to Founders Path yet and noted if they got that done, it would be the way he takes to 212.

City Administrator Podhradsky stated adding a 4-way-stop sign there would be something City Engineer Clark would need to look into. He noted in areas where stop signs are not expected they can cause more problems than not sometimes but it is something they can look into. He added cost is the reason Savanah Way hasn't been extended to Founders Path yet, but noted it will be done sooner than later.

Motion by Councilmember Hatfield, second by Councilmember Grau, to adopt Resolution No. 2022-25 approving the Rivertown Heights Preliminary Plat for a 90-lot subdivision on 40 acres of land (PC #2022-16).
Motion carried.

Motion by Councilmember Huang, second by Councilmember Hubbard, to adopt Ordinance No. 1011 approving the rezoning for Rivertown Heights from Open (O) to Planned Residential District No. 82 (PRD-82).
Motion carried.

DRAFT

8.E. Adopt Resolution 2022-29, Approving the Concept Plan for Hazeltine Plaza Apartments/Trident Development/PC #2022-18
City Administrator Podhradsky introduced this item.

Community Development Director Kabat provided a presentation and overview of this concept plan.

Councilmember Grau stated he would be concerned that they would use the retail parking lot to cut across through the parking lot to get to their apartment so he is glad to hear they are going to make sure it is separated somehow.

Community Development Director Kabat stated part of the proposal tonight is to have a traffic circulation study done and get some answers on where the conflicts might arise.

Councilmember Huang noted he would like to preserve some of the commercial space for potential businesses in the future.

Community Development Director Kabat noted the requirement is two parking spots per residential unit.

City Administrator Podhradsky stated there is another space for commercial development that they don't talk about often, the pumpkin patch off Pioneer and he thinks it would likely be the preferred location for a restaurant over the current development.

Mike Benson, Chaska Investment addressed the Council. He stated they have been having conversations with City staff dating back many years trying to figure out what made sense in this location. He noted at Chaska Commons has a traffic circulation pattern in there that works and they will most likely look at a solution like that for this site. He noted it is clear they have some work to do to make this site work for everyone and they are doing that. He stated the marketplace is the biggest issue they have struggled with over the years for this site.

Councilmember Hatfield stated she is hesitant to say what will or won't work in this space but it is an important corner where they put a lot of work and wants to make sure it is done correct. She noted she isn't opposed to a hotel somewhere, she knows hotels are always full in the area and as a wedding planner it is really hard to find blocks of rooms unless she books 12-18 months in advance.

Councilmember Huang stated he is thinking long term and thinks whatever they put in that corner spot today is going determine what they can add later and thinks they should leave some of the space open for growing retail or commercial needs down the line.

Roger Fink, Trident development addressed the Council. He stated he has been in the housing filed for over 20 years and 7 spent in the lodging business. He reviewed how his experience contributed to reviewing locations to decide what might be best in the spaces. He stated they liked this area for the proximity to restaurants, retail and commercial business.

DRAFT

Councilmember Hubbard noted her concern is how the commercial and residential sites are going to mesh together. She stated she isn't opposed to residential being there she is just concerned about how to make things like traffic, green spaces and parking work.

Mr. Fink stated they reached out to Kohl's a few weeks ago to get a new contact there and they did eventually end up having a call with a contact, Brian and they sent him the concept plan. He noted the only concern they raised as of last week, was focused on their southern entrance point and delivery movement without being obstructed. He noted they had their civil engineer do a study to make sure those concerns are addressed.

Councilmember Grau stated he worries about the long term viability of Kohl's on that site, he is thinking about what could go there instead if Kohl's was to go away and will that work with residential being there as well. He noted he isn't opposed to the residential being there but worries about what it looks like in the future basing this site off of Kohl's being there.

City Administrator Podhradsky stated as staff they get more concerned about that as well because big box stores seem to be going away.

Motion by Councilmember Grau, second by Councilmember Hubbard, to Adopt Resolution 2022-29, Approving the Concept Plan for Hazeltine Plaza Apartments/Trident Development/PC #2022-18.
Motion carried.

9. Bills
9.A. Accounts Payable Council Roster 3-21-2022

Council requested further information on page 5, 9, and 22.

City Administrator Podhradsky provided further information regarding those bills.

Motion by Councilmember Huang, second by Councilmember Hatfield, to approve the bills as presented. Roll call was taken. Voting aye: Councilmembers Grau, Hatfield, Hubbard, Huang, and Mayor Windschitl. Voting nay: None
Motion carried.

10. Other Business
10.A. City Administrator's Report
10.A.i. Bi-Weekly Report March 21, 2022

10.B. Hawk Pride Recap

Councilmember Grau:
- Thanked the individuals who have stayed with the City and noted it demonstrates if you are a good company and hire good people, people stay around

DRAFT

Councilmember Huang:

- Stated the longevity of the City staff and employees speaks volumes to the leadership
- April 21st is the MSB Open house
- May 7th Jonathon Spring clean-up day
- May 14th Jonathon festival of Garage Sales
- May 11th Taste of Chaska
- July 29th River City Days
- Congratulated Sub Zero Team
- Noted he is excited about the Empower Program led by Officer Janke and Chief Seibert
- Stated Southwest Transit is going through interviews and looking for a richer pool for candidates

Councilmember Hubbard:

- Stated she appreciates the hard work of the City staff
- Noted the Citizen Academy toured the Jail and stated the program is really great

Councilmember Hatfield:

- Noted there is Coffee with a Cop on Thursday at 9am at Caribou Coffee

City Administrator Podhradsky:

- Stated they are having the second round of interviews for Fire Chief on April 5th and 6th they have 3 candidates and added it would be great to have some Councilmembers present if possible

Mayor Windschitl:

- Stated awhile back the Council decided to put funds into a reserve and that ended up changing their bond rating and has really helped out the City in the long run, he noted it was a great decision

11. Adjourn

Motion by Councilmember Hatfield, second by Councilmember Huang, to adjourn the meeting at 11:30 pm.
Motion carried.

REQUEST FOR ACTION
CHASKA CITY COUNCIL
04/04/2022

Subject: **Lot Split for Holasek Property at 3985 Big Woods Boulevard**

Applicant: DR Horton

Location: 3985 Big Woods Boulevard

Case Number: P.C. No. 2022-22

Synopsis: The applicant is requesting approval of a Lot Split for 3985 Big Woods Boulevard

Prepared By: Elizabeth Hanson

Staff Recommendation: Motion to adopt Resolution approving the request

---

Background
The Holasek property at 3985 Big Woods Boulevard is currently being evaluated by DR Horton for development purposes. In March 2022, the Preliminary Plat and Rezoning were approved for Rivertown Heights, which included the Holasek property being incorporated into the development.

It should be noted that the lot split is only being approved to facilitate the closing on the land that will occur in early April. The developer will still be required to go through the remaining approvals (i.e. Final Plat), and that the Developer will still pay all costs and fees associated with re-platting.

Request
The applicant, DR Horton, is requesting a lot split on the property owned by the Holasek family at 3985 Big Woods Boulevard. The property at 3985 Big Woods Boulevard currently contains the homestead for the Holasek family.

The lot split approval will allow for the formal splitting of the lot to be two separate parcels. Parcel A will ultimately be sold off to DR Horton, and Parcel B will be retained by the Holasek family for their current homestead. Additionally, there will be a driveway easement in place in favor of the Holasek's for ingress/egress purposes until the surrounding property is final platted and developed, including the new driveway access for the home. The Holasek's driveway will ultimately be accessed from the extension of Percheron Boulevard in the new Rivertown Heights development.

Analysis
The proposed lot is located in the Planned Residential District (PRD-82) zoning district. Splitting the parcel will not render the parcels in violation of the Zoning Ordinance.

CITY COUNCIL ACTION REQUESTED

Motion to adopt Resolution 2022-34, approving the Lot Split on 3985 Big Woods Boulevard, subject to the stipulations included in said resolution and the following conditions:

1. Approvals shall be based on the following graphic exhibits:
    a. Lot Split, prepared by Westwood, dated March 15, 2022
    b. Driveway Easement, prepared by Westwood, dated March 15, 2022

CITY OF CHASKA
CARVER COUNTY, MINNESOTA

RESOLUTION

DATE APRIL 04, 2022 RESOLUTION NO. 2022-34

MOTION BY COUNCILMEMBER SECOND BY COUNCILMEMBER

Resolution approving the Lot Split for 3985 Big Woods Boulevard/DR Horton/P.C. No. 2022-22

WHEREAS, the Holasek property at 3985 Big Woods Boulevard is currently being evaluated by DR Horton for development purposes; and

WHEREAS, in March 2022, the Preliminary Plat and Rezoning were approved for Rivertown Heights, which included the Holasek property being incorporated into the development; and

WHEREAS, it should be noted that the lot split is only being approved to facilitate the closing on the land that will occur in early April; and

WHEREAS, the developer will still be required to go through the remaining approvals (i.e. Final Plat), and that the Developer will still pay all costs and fees associated with re-platting; and

WHEREAS, the lot split approval will allow for the formal splitting of the lot to be two separate parcels; and

WHEREAS, Parcel A will ultimately be sold off to DR Horton, and Parcel B will be retained by the Holasek family for their current homestead; and

WHEREAS, additionally, there will be a driveway easement in place in favor of the Holasek's for ingress/egress purposes until the surrounding property is final platted and developed, including the new driveway access for the home; and

WHEREAS, the Holasek's driveway will ultimately be accessed from the extension of Percheron Boulevard in the new Rivertown Heights development; and

WHEREAS, the proposed lot is located in the Planned Residential District (PRD-82) zoning district. Splitting the parcel will not render the parcels in violation of the Zoning Ordinance; and

NOW, THEREFORE, BE IT RESOLVED, by the City Council of the City of Chaska, Minnesota, hereby approves the Lot Split for 3985 Big Woods Boulevard (PC#2022-22), subject to the aforementioned stipulations and the following conditions:

1. Approvals shall be based on the following graphic exhibits:
    a. Lot Split, prepared by Westwood, dated March 15, 2022
    b. Driveway Easement, prepared by Westwood, dated March 15, 2022

Passed and adopted by the City Council of the City of Chaska, Minnesota, this 4th day of April, 2022.

_____
Mark Windschitl, Mayor

Attest:_____
Chaska Deputy Clerk

March 18, 2022

Elizabeth Hanson
City of Chaska
One City Hall Plaza
Chaska, MN 55318

Re: Request for Lot Split – Jim & Laura Holasek Property

Dear Ms. Hanson:

On behalf of Holasek Land Management, Inc., D.R. Horton, Inc. – Minnesota is pleased to submit this application for a lot division of 3.5 acres of Carver County Parcel No. 30.2020010.

D.R. Horton plans to close on the property early April. The lot split carves out the existing homestead which will be retained by the Holaseks. Additionally, there will be a driveway easement in place in favor of the Holaseks for ingress/egress purposes until the surrounding property is final platted and developed, including the new driveway access for the home.

Please find the following in support of our application:

1. Lot division application signed by landowner.
2. Lot Split Exhibit
3. Driveway Easement Exhibit

The application fee in amount of $434 will be submitted to the City Tues, 3/22.

Please contact me at 952.985.7864 or dridgeway@drhorton.com with any questions. Thank you.

Sincerely,

R. Horton, Inc.-Minnesota
) Kenbridge Court, Suite 100
Lakeville, MN 55044
www.drhorton.com

Deb Ridgeway
Land Acquisition Project Manager

Enclosures

© 2022 Westwood Professional Services, Inc.

Call 48 Hours before digging:
811 or call811.com
Common Ground Alliance

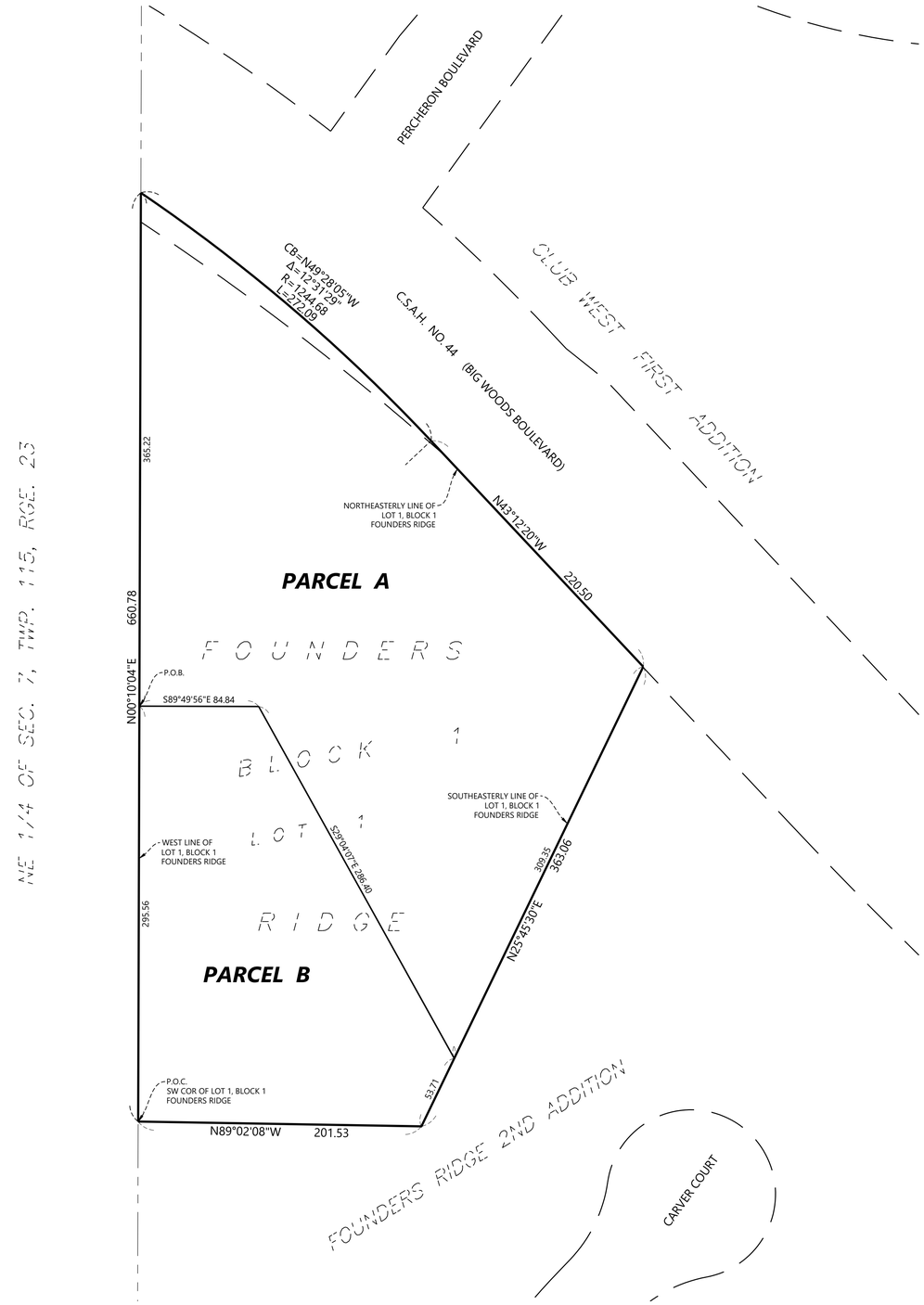

LEGAL DESCRIPTION

Lot 1, Block 1, Founders Ridge, Carver County, Minnesota.

Area: 3.59 acres

PROPOSED PARCEL A DESCRIPTION:

That part of Lot 1, Block 1, FOUNDERS RIDGE, according to the recorded plat thereof, Carver County, Minnesota, lying northerly and northeasterly of the following described line:

Commencing at the southwest corner of said Lot 1; thence North 00 degrees 10 minutes 04 seconds East, assumed bearing along the west line of said Lot 1, a distance of 295.56 feet to the point of beginning of the line to be described; thence South 89 degrees 49 minutes 56 seconds East, a distance of 84.84 feet; thence South 29 degrees 04 minutes 07 seconds East, a distance of 286.40 feet to the southeasterly line of said Lot 1 and said line there terminating.

Area: 2.47 acres

PROPOSED PARCEL B DESCRIPTION:

That part of Lot 1, Block 1, FOUNDERS RIDGE, according to the recorded plat thereof, Carver County, Minnesota, EXCEPT that part lying northerly and northeasterly of the following described line:

Commencing at the southwest corner of said Lot 1; thence North 00 degrees 10 minutes 04 seconds East, assumed bearing along the west line of said Lot 1, a distance of 295.56 feet to the point of beginning of the line to be described; thence South 89 degrees 49 minutes 56 seconds East, a distance of 84.84 feet; thence South 29 degrees 04 minutes 07 seconds East, a distance of 286.40 feet to the southeasterly line of said Lot 1 and said line there terminating.

Area: 1.12 acres

N:\0027067.00\DWG\SURVEY\0027067S-SKF02.DWG

RIVERTOWN HEIGHTS

DESIGNED:	-
CHECKED:	MJW
DRAWN:	SRM
HORIZONTAL SCALE:	50'
VERTICAL SCALE:	

INITIAL ISSUE: 3/15/2022
REVISIONS:

PREPARED FOR:

D.R. HORTON, INC. - MINNESOTA
20860 KENBRIDGE COURT, SUITE 100
LAKEVILLE, MINNESOTA 55044

RIVERTOWN HEIGHTS
CHASKA, MINNESOTA

Westwood
Phone (952) 937-5150 12701 Whitewater Drive, Suite #300
Fax (952) 937-5822 Minnetonka, MN 55343
Toll Free (888) 937-5150 westwoodps.com
Westwood Professional Services, Inc.

LOT SPLIT

PROJECT NUMBER: 0027067.00

SHEET NUMBER: 1 OF 1

DATE: 03/15/2022

© 2022 Westwood Professional Services, Inc.

Call 48 Hours before digging:
811 or call811.com
Common Ground Alliance

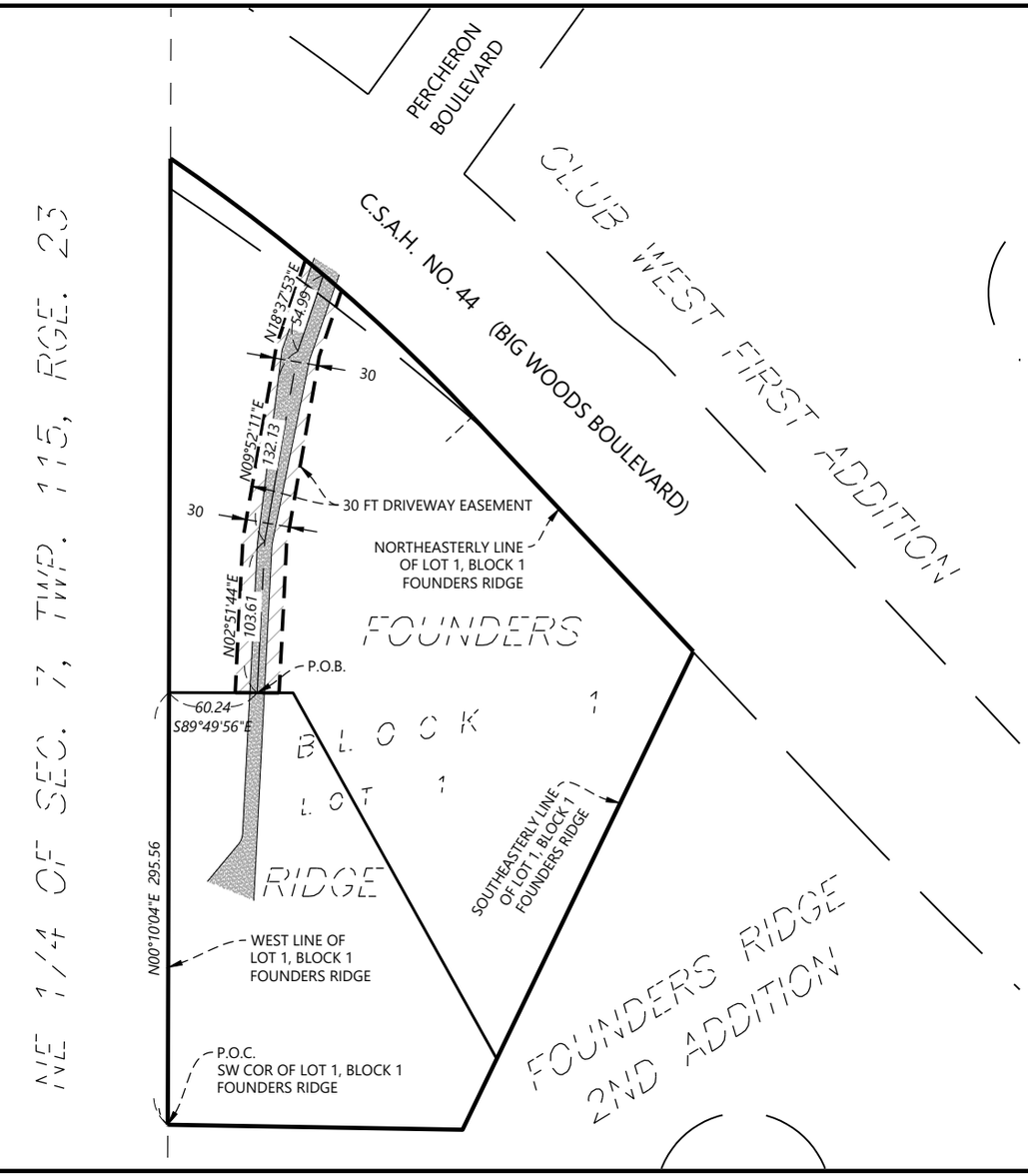

LEGAL DESCRIPTION

A 30.00 foot wide Driveway Easement lying over, under and across that part of Lot 1, Block 1, FOUNDERS RIDGE, according to the recorded plat thereof, Carver County, Minnesota, the centerline of which is described as follows:

Commencing at the southwest corner of said Lot 1; thence North 00 degrees 10 minutes 04 seconds East, assumed bearing along the west line of said Lot 1, a distance of 295.56 feet; thence South 89 degrees 49 minutes 56 seconds East, a distance of 60.24 feet to the point of beginning of the centerline to be described; thence North 02 degrees 51 minutes 44 seconds East, a distance of 103.61 feet; thence North 09 degrees 52 minutes 11 seconds East, a distance of 132.13 feet; thence North 18 degrees 37 minutes 53 seconds East, a distance of 54.99 feet to the northeasterly line of said Lot 1 and said centerline there terminating.

The sidelines of said easement are to be prolonged or shortened to terminate at said northeasterly line of Lot 1 and a line bearing South 89 degrees 49 minutes 56 seconds East from said point of beginning.

N

0' 120' 240'

N:\0027067.00\DWG\SURVEY\0027067S-ESF01.DWG

RIVERTOWN HEIGHTS

DESIGNED: .
CHECKED: MJW
DRAWN: SRM
FIELD CREW: .
FIELD BOOK/PAGE: .

RIVERTOWN HEIGHTS

CHASKA, MINNESOTA

Westwood
Phone (952) 937-5150 12701 Whitewater Drive, Suite #300
Fax (952) 937-5822 Minnetonka, MN 55343
Toll Free (888) 937-5150 westwoodps.com
Westwood Professional Services, Inc.

DRIVEWAY EASEMENT

PROJECT NUMBER: 0027067.00

SHEET NUMBER: 1 OF 1

DATE: 03/15/2022

EXISTING LEGAL DESCRIPTION:
Lot 1, Block 1, Founders Ridge, Carver County, Minnesota.

Area: 3.59 acres

PROPOSED PARCEL A DESCRIPTION:
That part of Lot 1, Block 1, FOUNDERS RIDGE, according to the recorded plat thereof, Carver County, Minnesota, lying northerly and northeasterly of the following described line:

> Commencing at the southwest corner of said Lot 1; thence North 00 degrees 10 minutes 04 seconds East, assumed bearing along the west line of said Lot 1, a distance of 295.56 feet to the point of beginning of the line to be described; thence South 89 degrees 49 minutes 56 seconds East, a distance of 84.84 feet; thence South 29 degrees 04 minutes 07 seconds East, a distance of 286.40 feet to the southeasterly line of said Lot 1 and said line there terminating.

Area: 2.47 acres

PROPOSED PARCEL B DESCRIPTION:
That part of Lot 1, Block 1, FOUNDERS RIDGE, according to the recorded plat thereof, Carver County, Minnesota, EXCEPT that part lying northerly and northeasterly of the following described line:

> Commencing at the southwest corner of said Lot 1; thence North 00 degrees 10 minutes 04 seconds East, assumed bearing along the west line of said Lot 1, a distance of 295.56 feet to the point of beginning of the line to be described; thence South 89 degrees 49 minutes 56 seconds East, a distance of 84.84 feet; thence South 29 degrees 04 minutes 07 seconds East, a distance of 286.40 feet to the southeasterly line of said Lot 1 and said line there terminating.

Area: 1.12 acres

REQUEST FOR ACTION
CHASKA CITY COUNCIL
04-04-2022

Subject: **Adopt Ordinance, Amend Chapter 2, Article 8, Sections 10 and 20 of the Chaska MN Code of Ordinances - Ward Boundaries and Polling Locations**

Prepared By: Nate Kabat

Background
On March 21, 2022, the City Council adopted Ordinance MC 2022-1012, which amended Chapter 2, Article 8, Sections 10 and 20 of the Chaska Minnesota Code of Ordinances to establish the boundaries of the City of Chaska's voting wards, voting precincts, and polling places. Ordinance MC 2022-1012 contained errors in the descriptions of the precinct boundaries that need to be corrected. Ordinance MC 2022-1013 repeals error content from the code and reenacts Ordinance MC 2022-1012 in its entirety for the purpose of correcting precinct boundaries.

CITY COUNCIL ACTION REQUESTED
Motion to adopt Ordinance No. MC 2022-1013 to repeal error content and reenact Ordinance No. MC 2022-1012 chapter 2, article 8, sections 10 and 20 of the Chaska Minnesota Code of Ordinances.

CITY OF CHASKA
ORDINANCE MC 2022-1013

AMEND CHAPTER 2, ARTICLE 8, SECTIONS 10 AND 20 MN CODE OF ORDINANCES

WHEREAS, the legislature of the State of Minnesota has been redistricted; and

WHEREAS, Minnesota Statute §204B.14, subd. 3(e) requires that ward boundaries must be reestablished within 60 days of when the legislature has been redistricted or at least 19 weeks before the state primary election, whichever comes first; and

WHEREAS, on March 21, 2022, the City Council adopted Ordinance MC 2022-1012, which amended Chapter 2, Article 8, Sections 10 and 20 of the Chaska Minnesota Code of Ordinances to establish the boundaries of the City of Chaska's voting wards, voting precincts, and polling places; and

WHEREAS, Ordinance MC 2022-1012 contained errors in the descriptions of the precinct boundaries that need to be corrected; and

WHEREAS, this ordinance repeals error content from the code and reenacts Ordinance MC 2022-1012 in its entirety for the purpose of correcting such precinct boundaries;

NOW THEREFORE, be it ordained by the Council of the City of Chaska, in the State of Minnesota, as follows: the Council of the City of Chaska, County of Carver, State of Minnesota, hereby ordains:

SECTION 1: **REPEAL & REENACT** "2.08.020 Polling Places" of the City of Chaska Municipal Code is hereby *repealed & reenacted* as follows:

REPEAL & REENACT

2.08.020 Polling Places

A. *First Ward, Precincts One and Two:* ~~:~~ Chaska Event Center located at the northwest corner of Chestnut Street and Chaska Boulevard at 3210 Chaska Boulevard Street in the City of Chaska.
B. *Second Ward, Precincts One and Two:* ~~:~~ Christ Victorious Lutheran Church located at the northwest intersection of Pioneer Trail and Shady Oak Drive at 9860 Shady Oak Drive in the City of Chaska.
C. *Third Ward:* Chaska Moravian Church located at the northwest corner of Fourth Street and Walnut Street at 115 Fourth Street East in the City of Chaska.

D. *Fourth Ward:* Chaska Community Center, located at the intersection of Park Ridge Drive and Engler Boulevard at 1661 Park Ridge Drive, in the City of Chaska.

(Ord. No. 859, Chap. 2, Art. III, Sec. 19, 4/30/12)

SECTION 2: **REPEAL & REENACT** "2.08.010 Ward Boundaries" of the City of Chaska Municipal Code is hereby *repealed & reenacted* as follows:

REPEAL & REENACT

2.08.010 Ward Boundaries

The Ward boundaries of Wards I, II, III and IV shall be as follows:

WARD I, Precinct 1

Beginning at the intersection of the centerline of Chestnut Street and the centerline of U.S. Highway 212; thence northerly along the centerline of Chestnut Street to its intersection with Hundertmark Road; thence westerly along the centerline of Hundertmark Road to its intersection with the centerline of Bavaria Road; thence southerly along the centerline of Bavaria Road to its intersection with the centerline of U.S. Highway 212; thence easterly along the centerline of U.S. Highway 212 to the point of beginning. ~~extended southerly to the centerline of the Minnesota River; thence northerly along the centerline of Chestnut Street to its intersection with Hundertmark Road; thence westerly along the centerline of Hundertmark Road to its intersection with Bavaria Road; thence north along the centerline of Bavaria Road to its intersection with the centerline of Ashley Drive; thence westerly along the centerline of Ashley Drive to its intersection with the easterly property line of Lot 1, Block 1, Tuscany Hills 2nd Addition; thence southerly along the said property line extended south; thence southerly following the centerline of the ditch through wetland EC-W57 to its intersection with Hundertmark Road West; thence westerly along the centerline of Hundertmark Road West to its intersection with the centerline of the Chaska trail which follows the right-of-way of vacated Victoria Drive; thence southeasterly along the centerline of said Chaska trail to its intersection with the centerline of Engler Boulevard; thence westerly along the centerline of Engler Boulevard to its intersection with the west Corporate Limits of the City of Chaska; thence southerly along the west Corporate Limits of the City of Chaska to its intersection with the south boundary line of the Corporate Limits of the City of Chaska; thence east along the south boundary line of the Corporate Limits of the City of Chaska to its intersection with the centerline of the Minnesota River; thence northwesterly and easterly along the centerline of the Minnesota River to the point of beginning.~~

WARD 1, Precinct 2

Beginning at the intersection of the centerline of Chestnut Street extended southerly to the centerline of the Minnesota River; thence northerly along the centerline of Chestnut Street to its intersection with the centerline of U.S. Highway 212; thence westerly along the centerline of U.S. Highway 212 to its intersection with the centerline of Bavaria Road; thence northerly along the centerline of Bavaria Road to its intersection with the centerline of Hundertmark Road; thence westerly along the centerline of Hundertmark Road to its intersection with the centerline of Bavaria Road; thence northerly along the centerline of Bavaria Road to its intersection with the centerline of Ashley Drive; thence westerly along the centerline of Ashley Drive to its intersection with the western property line of Lot 1, Block 1, Tuscany Hills 2nd Addition; thence southerly along the said property line extended south; thence southerly following the centerline of the ditch through wetland EC-W57 to its intersection with Hundertmark Road West; thence westerly along the centerline of Hundertmark Road West to its intersection with the centerline of the Chaska trail located upon the vacated right-of-way of Victoria Drive; thence southeasterly along the centerline of said Chaska trail joining upon and continuing southeasterly along the centerline of Victoria Drive over and across U.S. Highway 212 to its intersection with the centerline of Engler Boulevard; thence westerly along the centerline of Engler Boulevard to its intersection with the west Corporate Limits of the City of Chaska; thence southerly along the west Corporate Limits of the City of Chaska to its intersection with the south boundary line of the Corporate Limits of the City of Chaska; thence east along the south boundary line of the Corporate Limits of the City of Chaska to its intersection with the centerline of the Minnesota River; thence northwesterly and easterly along the centerline of the Minnesota River to the point of beginning.

WARD II, Precinct 1

All the territory within the Corporate Limits of the City of Chaska lying north and west of the following described line: Beginning at the intersection of the centerline of Pioneer Trail and the west Corporate Limits of the City of Chaska; thence southeasterly along the centerline of Pioneer Trail to its intersection with the centerline of vacated Victoria Drive; thence southeasterly along the centerline of vacated Victoria Drive to its intersection with the centerline of Twin Cities and Western Railway; thence northeasterly along the centerline of Twin Cities and Western Railway to its intersection with the centerline of McKnight Road; thence northerly along the centerline of McKnight Road to its intersection with the centerline of 82nd Street at the north Corporate Limits of the City of Chaska.
~~Beginning at the intersection of the centerline of Engler Boulevard and the west Corporate Limits of the City of Chaska; thence easterly along the centerline of Engler Boulevard to its intersection with the centerline of the Chaska trailwhich trail follows the centerline of vacated Victoria Drive; thence northwesterly along the centerline of said Chaska trail to its intersection with the centerline of Hundertmark Road; thence easterly along the centerline of Hundertmark Road to its intersection with the centerline of the ditch through wetland EC-W57; thence northerly along the centerline of the ditch through wetland EC-W57 to the easterly property line of Lot 1, Block 1, Tuscany Hills 2nd Addition; thence northerly along said property line to the centerline of Ashley Drive; thence easterly along the centerline of Ashley Drive to the centerline of Bavaria Road; thence northerly along the centerline of Bavaria Road to its intersection of the centerline of the Twin Cities and Western Railway; thence northeasterly along the centerline of the Twin Cities and Western Railway14 to its intersection with the centerline of McKnight Road; thence northerly along the centerline of McKnight Road to its intersection with the north Corporate Limits of the City of Chaska; thence northwesterly, westerly, southerly and easterly with the Corporate Limits of the City of Chaska to the point of beginning.~~

WARD II, Precinct 2

Beginning at the intersection of the centerline of Engler Boulevard and the west Corporate Limits of the City of Chaska; thence easterly along the centerline of Engler Boulevard to its intersection with the centerline of Victoria Drive, thence northwesterly along the centerline of Victoria Drive over and across U.S. Highway 212 joining upon and continuing northwesterly along the centerline of Victoria Drive joining upon and continuing along the centerline of the Chaska trail located upon the vacated right-of-way of Victoria Drive; thence northwesterly along the centerline of said Chaska trail to its intersection with the centerline of Hundertmark Road; thence easterly along the centerline of Hundertmark Road to its intersection with the centerline of the ditch through wetland EC-W57; thence northerly along the centerline of the ditch through wetland EC-W57 to the westerly property line of Lot 1, Block 1, Tuscany Hills 2nd Addition; thence northerly along said property line to the centerline of Ashley Drive; thence easterly along the centerline of Ashley Drive to the centerline of Bavaria Road; thence northerly along the centerline of Bavaria Road to its intersection of the centerline of the Twin Cities and Western Railway; thence southwesterly along the centerline of the Twin Cities and Western Railway to its intersection with the centerline of the vacated right-of-way of Victoria Drive; thence northwesterly along the centerline of vacated Victoria Drive to its intersection with the centerline of Pioneer Trail; thence northwesterly along the centerline of Pioneer Trail to its intersection with the centerline of Clover Ridge Drive at the west Corporate Limits of the City of Chaska; thence southerly along the west Corporate Limits of the City of Chaska to the point of beginning.

WARD III

All the territory within the Corporate Limits of the City of Chaska lying east of the following described line: Beginning at the intersection of the centerline of Chestnut Street extended southerly to the centerline of the Minnesota River; thence northerly along the centerline of Chestnut Street to its intersection with the centerline of Engler Boulevard; thence easterly along the centerline of Engler Boulevard to its intersection with the centerline of Audubon Road; thence northerly along the centerline of Audubon Road to its intersection with the centerline of Pioneer Trail; thence westerly along the centerline of Pioneer Trail to its intersection with the centerline of Acorn Road; thence north along the centerline of Acorn Road to its intersection with the centerline of Autumn Woods Drive; thence northerly and easterly along the centerline of Autumn Woods Drive to its intersection with the centerline of Audubon Road at the east Corporate Limits of the City of Chaska.

~~Beginning at the intersection of the centerline of Chestnut Street extended southerly to the centerline of the Minnesota River; thence northerly along the centerline of Chestnut Street to its intersection with the centerline of Engler Boulevard; thence easterly along the centerline of Engler Boulevard to its intersection with the centerline of Audubon Road; thence northerly along the centerline of Audubon Road to its intersection with the centerline of Pioneer Trail; thence westerly along the centerline of Pioneer Trail to its intersection with the centerline of Acorn Road; thence north along the centerline of Acorn Road to its intersection with the centerline of Autumn Woods Drive; thence northerly and westerly along the centerline of Autumn Woods Drive to its intersection with the the Corporate Limits of the City of Chaska; thence southerly, easterly, westerly, northeasterly and southerly along the east Corporate Limits of the City of Chaska to its intersection with the centerline of the Minnesota River; thence southerly and westerly along the centerline of the Minnesota River to the point of beginning.~~

WARD IV

Beginning at the intersection of the centerline of Engler Boulevard and the centerline of Chestnut Street; thence northerly along the centerline of Chestnut Street to its intersection with the centerline of Hundertmark Road; thence westerly along the centerline of Hundertmark Road to its intersection with the centerline of Bavaria Road; thence northerly along the centerline of Bavaria Road to its intersection with the centerline of the Twin Cities and Western Railway; thence northeasterly along the centerline of the Twin Cities and Western Railway to its intersection with the centerline of McKnight Road; thence northerly along the centerline of McKnight Road to its intersection with 82nd Street at the north Corporate Limits of the City of Chaska; thence easterly along the centerline of 82nd Street and continuing to the northeast corner of Lot 2 Block 1 of Arbor Park 3rd Addition, thence southerly along the eastern boundary of Lot 2, Block 1 of Arbor Park 3rd Addition along the east Corporate Limits of the City of Chaska to the intersection with the centerline of the Twin Cities and Western Railway; then northwesterly to its intersection with the centerline of Lyman Boulevard; thence southeasterly along the centerline of Lyman Boulevard to its intersection with Lake Hazeltine Drive; thence southeasterly along the northern boundary of Tract O as depicted on Registered Land Survey No. 51, Carver County, Minnesota and continuing along the northern boundary of the eastern property to its intersection with the centerline of Audubon Road; thence southerly along the centerline of Audubon Road to its intersection with the centerline of Autumn Woods Drive; thence westerly and southerly along the centerline of Autumn Woods Drive to its intersection with the centerline of Acorn Road; thence southerly along the centerline of Acorn Road to its intersection with the centerline of Pioneer Trail; thence easterly along the centerline of Pioneer Trail to its intersection with the centerline of Audubon Road; thence southerly along the centerline of Audubon Road to its intersection with the centerline of Engler Boulevard; thence westerly along the centerline of Engler Boulevard to the point of beginning.

~~Beginning at the intersection of the centerline of Engler Boulevard and the centerline of Chestnut Street; thence northerly along the centerline of Chestnut Streeet to its intersection with the centerline of Hundertmark Road; thence westerly along the centerline of Hundertmark Road to its intersection with the centerline of Bavaria Road; thence northerly along the centerline of Bavaria Road to its intersection with the centerline of the Twin Cities and Western Railway; thence northeasterly along the centerline of the Twin Cities and RailwayWesternNo. 14 to its intersection with the centerline of McKnight Road; thence northerly along the centerline of McKnight Road to its intersection with the north Corporate Limits of the City of Chaska; thence easterly, northerly and southerly along the northerly and easterly Corporate Limits of the City of Chaska to its intersection with the centerline of Autumn Woods Drive; thence westerly and southerly along the centerline of Autumn Woods Drive to its intersection with the centerline of Acorn Road; thence southerly along the centerline of Acorn Road to its intersection with the centerline of County Road No. 14; thence easterly along the centerline of Pioneer Trailintersection with the centerline of Audubon Road; thence southerly along the centerline of Audubon Road to its intersection with the centerline of Engler Boulevard; thence westerly along the centerline of Engler Boulevard to the point of beginning.~~

(Ord. No. 858, Chap. 2, Art. III, Sec. 19, 4/2/12)

SECTION 3: **<u>EFFECTIVE DATE</u>** This Ordinance shall be in full force and effect from April 4, 2022 and after the required approval and publication according to law.

PASSED AND ADOPTED BY THE CITY OF CHASKA COUNCIL _____.

	AYE	**NAY**	**ABSENT**	**ABSTAIN**
Councilmember Grau	_____	_____	_____	_____
Councilmember Hatfield	_____	_____	_____	_____
Councilmember Huang	_____	_____	_____	_____
Councilmember Hubbard	_____	_____	_____	_____
Mayor Windschitl	_____	_____	_____	_____

Presiding Officer

_____
Mark Windschitl, Mayor, City of Chaska

Attest

_____
Denise Beebe, Senior Clerk City of Chaska

CITY OF CHASKA

2022 Ward Boundaries

Date: 3/25/2022

0 950 1,900 3,800 5,700 7,600 Feet

N

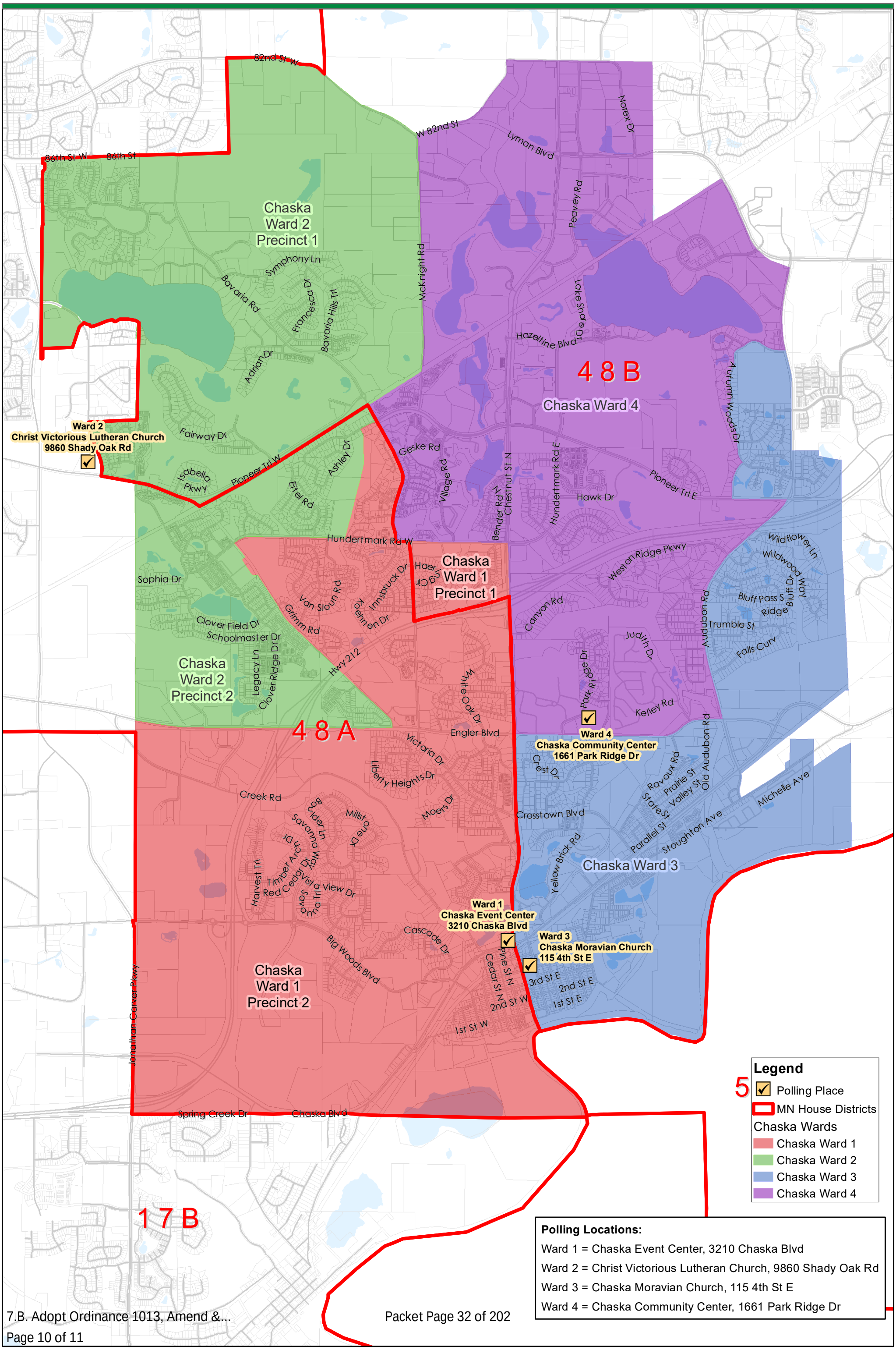

CITY OF CHASKA

2022 Ward Boundaries

Date: 3/25/2022

0 950 1,900 3,800 5,700 7,600 Feet

N

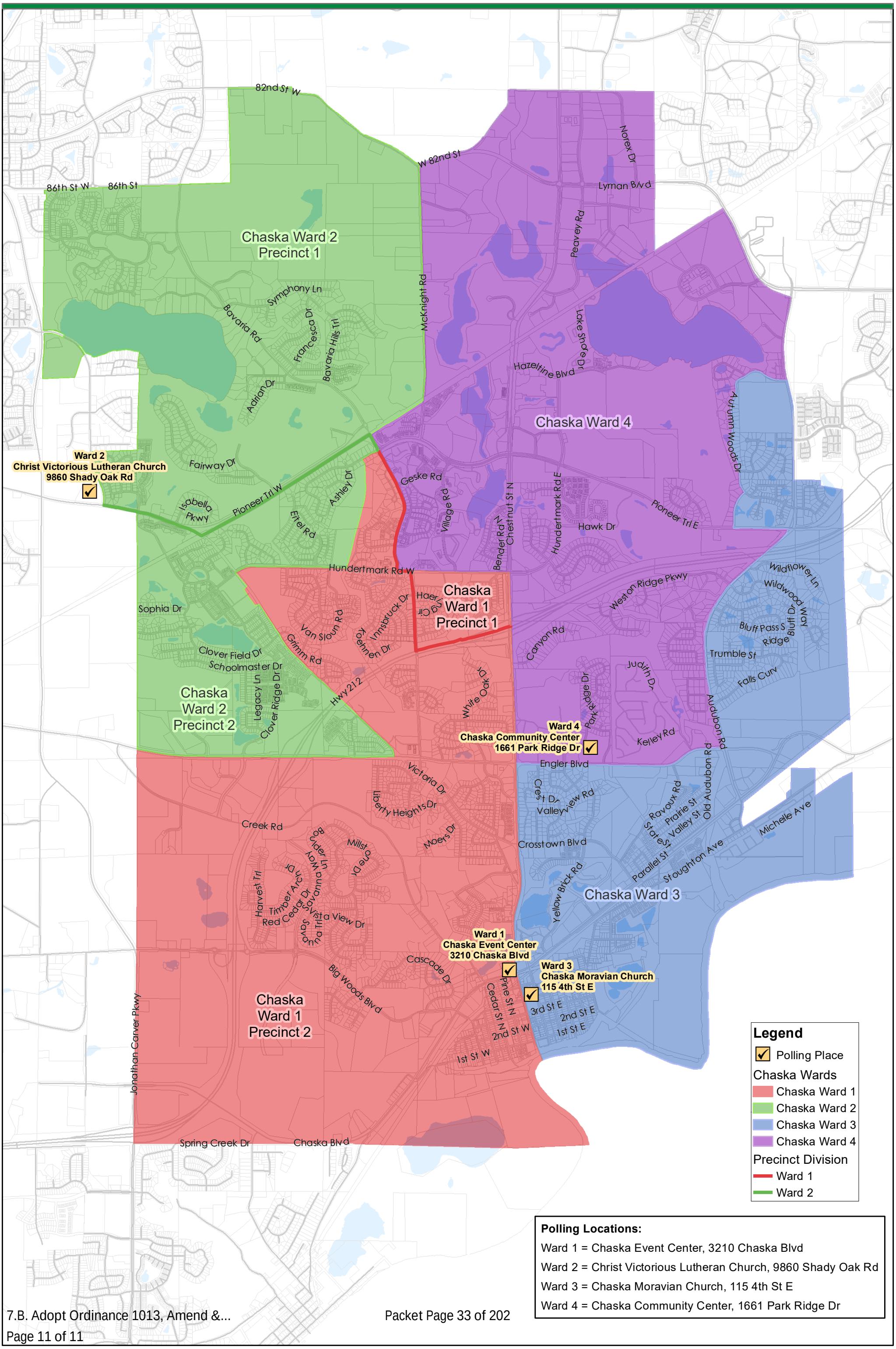

Polling Locations:

Ward 1 = Chaska Event Center, 3210 Chaska Blvd

Ward 2 = Christ Victorious Lutheran Church, 9860 Shady Oak Rd

Ward 3 = Chaska Moravian Church, 115 4th St E

Ward 4 = Chaska Community Center, 1661 Park Ridge Dr

REQUEST FOR ACTION
CHASKA CITY COUNCIL
4/4/2022

Subject: Transient Accommodation Renewals

Prepared By: Denise Beebe, Senior Clerk

Background

In 2018 Council adopted an ordinance requiring hotel and motel operations (transient accommodations) be licensed. The purpose of the ordinance is to ensure transient accommodations take steps and implement measures to discourage the use of their facilities for criminal activities and to protect the safety of their guests and the public.

On March 5, 2021, the City Council amended the ordinance regarding how the determination of annual qualifying calls for service would be considered to determine which level the facility would be in.

A. Level I - 0 to 9 annual qualifying calls for service; 0 annual qualifying felony complaints.

B. Level II - 10 to 19 annual qualifying calls for service; 1 annual qualifying felony complaints.

C. Level III - 20 or more annual qualifying calls for service; 2 or more annual qualifying felony complaint.

The fee schedule remained the same.

This year Super 8 remains at a Level II and TownSquare Place moved up to a Level II renewal but both locations continue to work with Chaska Police to ensure proper steps are being taken.

Transient Accommodations Level I: $300

Transient Accommodations Level II: $600
Super 8
TownSquare Place

Super 8 has returned their renewal paperwork and fee. TownSquare has been notified again but has not yet submitted their renewal. Staff recommends approval of the 2022-2023 transient accommodation license renewals upon receiving the required paperwork and fee.

CITY COUNCIL ACTION REQUESTED

Motion to approve the 2022-2023 transient accommodation licenses effective May 1, 2022 through April 30, 2023.

REQUEST FOR ACTION
CHASKA CITY COUNCIL
4/4/2022

Subject: 2022 Overlay program

Prepared By: Brian Jung, Public Works Director

Specifications were prepared for 2022 Overlay program. The lists of streets are as follows:

Town Course Dr	White Oak Dr (No of Highwood Dr)	Royal Oak Dr
Fairway Dr	Jaspers Cir N	Pondview Ln
Fairway Ct	Jaspers Cir S	
Fairway Cir	Groves Dr	

Bids were opened on March 29th,2022 at 1:00PM. The results were as follows:

- Northwest Asphalt $431,715.60,
- WM Mueller $434,215.00
- GMH Asphalt $440,969.52
- Valley Paving $497,876.20

Pavement overlay and seal coat are handled as maintenance operations in the General Fund. The low bid is below the budget amount. Northwest Asphalt is a reputable local firm that has done work for the City of Chaska in the past.

Staff recommends awarding the bid for 2022 Overlay to Northwest Asphalt.

<u>CITY COUNCIL ACTION REQUESTED</u>
Motion to approve Resolution No. 2022-31 awarding the bid for the 2022 Overlay Program to Northwest Asphalt in the low bid amount of $431,715.60.

CITY OF CHASKA

CARVER COUNTY, MINNESOTA

RESOLUTION

DATE: _____04/04/2022_____RESOLUTION NO._____2022-31__
MOTION BY COUNCILMEMBER_____SECOND BY COUNCILMEMBER_____

A Resolution Awarding the 2022 Bid for the 2022 Overlay Program to Northwest Asphalt, Inc in the Low Bid Amount of $431,715.60

WHEREAS, on March 29, 2022, bids were opened and tabulated for the 2022 Overlay program for the following streets according to State Statute: and

- Northwest Asphalt $431,715.60,
- WM Mueller $434,215.00
- GMH Asphalt $440,969.52
- Valley Paving $497,876.20

NOW, THEREFORE, BE IT RESOLVED, that the City Council of the City of Chaska, Minnesota, does hereby award the bid for the 2022 Overlay program for the following streets to the low responsible bidder, Wm Mueller & Sons, in the amount of $397,280.30

Town Course Dr	White Oak Dr (No of Highland Dr)	Royal Oak Dr
Fairway Dr	Jaspers Cir N	Pondview Ln
Fairway Ct	Jaspers Cir S	
Fairway Cir	Groves Dr	

Passed and adopted by the City Council of the City of Chaska, Minnesota, this 4th day of April, 2022.

_____
Mark Windschitl, Mayor

Attest _____
Deputy City Clerk

REQUEST FOR ACTION
CHASKA CITY COUNCIL
04/04/2022

Subject: **Amending 2021 Fund Budgets**

Prepared By: Matt Burt, Accountant II

Reviewed By: Noel Graczyk, Administrative Services Director
Kelly Grinnell, Finance Manager

Background
While preparing the final 2021 Financial Statements, staff has evaluated and identified amendments to certain 2021 Fund Budgets.

General Fund: The City annually receives $26,500 in Public, Educational, and Governmental access channel fees (PEG Fees). In order to better track the revenue and use of the PEG Fees that the City collects, staff has moved the revenue out of the General Fund and into the Equipment Acquisition Fund. Under federal law, PEG Fees can only be used for capital costs that are associated with PEG access equipment and facilities. By having the revenue in the Equipment Acquisition Fund, it better ensures that the dollars are being spent only for its intended use. The budget will be balanced by using unallocated reserve dollars.

Equipment Acquisition Fund: Due to the ongoing supply chain and shipping difficulties, the Air Packs that were ordered by the Fire Department in 2020 did not arrive until April of 2021. These Air Packs cost $290,000 and were previously budgeted for in 2020.

Due to new Department of Transportation (DOT) requirements, the City needed to purchase a Mash Trailer for $20,000. This trailer will be used by the Public Works, Electric, Water, and Sewer departments. Due to the multiple departments using the trailer, the cost was split at an allocation of 50%/20%/20%/10% between Electric/Water/Sewer/Public Works. The Electric, Water, and Sewer departments all paid their share of the cost out of their own funds.

The Police, Engineering, and Public Works departments also purchased a Speed Trailer that can be used to assist in traffic speed reduction areas for Construction Zones and for speed enforcement efforts. Total cost of the speed trailer was $16,650 split evenly between Police, Engineering, and Public Works.

Water and Sewer Funds: Due to new Occupational Safety and Health Administration (OSHA) requirements, the Water and Sewer departments need to purchase a new Trench Box for a total of $13,000. This was split to be paid $10,000 by the Water Fund and $3,000 by the Sewer fund. The Trench Box is used to ensure that when maintenance workers are working in a excavated trench that the walls are stabilized and will not collapse.

Chaska Community Center and Chaska Curling and Event Center Funds: Due to the continued difficulties and restrictions caused by COVID-19 throughout 2021, staff operated the Community Center and Curling and Event Center at reduced budget levels to try and keep expenses as low as possible given the reduction that was seen in revenues. Staff anticipated a reduction to the budgeted revenue in the Community Center Fund from $4,086,920 down to $2,880,210 and budgeted expenses down from $4,086,920 to $3,878,552. For the Curling and Event Center, staff anticipated a reduction in budgeted revenue from $2,833,133 to $2,456,955 and budgeted expenses from $2,827,826 down to $2,784,476.

Recommendation

Staff recommends adoption of the proposed resolution.

CITY COUNCIL ACTION REQUESTED

Motion to adopt Resolution 2022-32 Amending 2021 Fund Budgets.

CITY OF CHASKA
CARVER COUNTY, MINNESOTA

RESOLUTION

DATE 04/04/2022 RESOLUTION NO. 2022-32

MOTION BY COUNCILMEMBER_____ SECOND BY COUNCILMEMBER_____

A RESOLUTION AMENDING 2021 FUND BUDGETS

WHEREAS, the City Council, on December 21, 2020, adopted Resolution No. 2020-98 adopting the 2021 Budget; and,

WHEREAS, the City Council previously adopted the following budget amendments:

- April 5, 2021 – Res. 2021-15

WHEREAS, budget amendments to the General Fund, Equipment Acquisition Fund, Electric Fund, Water Fund, Sewer Fund, Chaska Community Center Fund, and Chaska Curling and Event Center Fund have been identified to reflect adjusted revenues and expenditures as estimated for 2021.

NOW, THEREFORE, BE IT RESOLVED, by the City Council of the City of Chaska, Minnesota, that the following amendments to the 2021 Budget be adopted:

2021 Budget	Revenues and Other Sources	Expenditures and Other Uses	Net Increase (Decrease)
General Fund (Fund 101)	$20,249,824	$20,249,824	$0
Increases	0	0	0
Decreases	(26,500)	(26,500)	0
Amended Fund Budget	$20,223,324	$20,223,324	$0

2021 Budget	Revenues and Other Sources	Expenditures and Other Uses	Net Increase (Decrease)
Equipment Acquisition Fund (Fund 448)	$3,531,159	$4,340,932	$(809,773)
Increases	26,500	308,650	(282,150)
Decreases	0	0	0
Amended Fund Budget	$3,557,659	$4,649,582	$1,091,923

2021 Budget	Revenues and Other Sources	Expenditures and Other Uses	Net Increase (Decrease)
Electric Fund (Fund 601)	$40,716,500	$40,716,025	$475
Increases	0	10,000	(10,000)
Decreases	0	0	0
Amended Fund Budget	$40,716,500	$40,726,025	$(9,525)

2021 Budget	Revenues and Other Sources	Expenditures and Other Uses	Net Increase (Decrease)
Water Fund (Fund 602)	$3,930,840	$3,853,457	$77,383
Increases	0	14,000	(14,000)
Decreases	0	0	0
Amended Fund Budget	$3,930,840	$3,867,457	$63,383

2021 Budget	Revenues and Other Sources	Expenditures and Other Uses	Net Increase (Decrease)
Sewer Fund (Fund 603)	$4,701,450	$4,796,806	$(95,356)
Increases	0	7,000	(7,000)
Decreases	0	0	0
Amended Fund Budget	$4,701,450	$4,803,806	$(102,356)

2021 Budget	Revenues and Other Sources	Expenditures and Other Uses	Net Increase (Decrease)
Chaska Community Center Fund (Fund 604)	$4,086,920	$4,086,920	$0
Increases	0	0	0
Decreases	(1,206,710)	(208,368)	(998,342)
Amended Fund Budget	$2,880,210	$3,878,552	$(998,342)

2021 Budget	Revenues and Other Sources	Expenditures and Other Uses	Net Increase (Decrease)
Chaska Curling and Event Center Fund (Fund 610)	$2,883,133	$2,827,826	$5,307
Increases	0	0	0
Decreases	(376,178)	(43,350)	(332,828)
Amended Fund Budget	$2,456,955	$2,784,476	$(327,521)

Passed and adopted by the City Council of the City of Chaska, Minnesota, this 4th day of April 2022.

_____
Mark Windschitl, Mayor

Attest:_____
Chaska Deputy Clerk

REQUEST FOR ACTION
CHASKA CITY COUNCIL
4/4/2022

Subject: **Letter of Appreciation—Congressionally Directed Spending Southwest Chaska Sewer Extension**

Prepared By: **Elise Durbin, Assistant City Administrator**

In 2021, U.S. Congress restored the Congressionally Directed Spending program, commonly known as earmarks. The program allows for members of Congress to request funding for specific projects in their communities. Cities and other agencies were encouraged to apply to their members of Congress for projects that could be advanced with federal support.

Last May, city staff prepared and submitted a $2M request to Senator Klobuchar, Senator Smith, and Representative Phillips for the Southwest Chaska Sewer Extension project. The request was submitted to help with sewer and roadway costs associated with the start of the business park development in Southwest Chaska.

In March 2022, the city was informed that the funding it had requested was secured. The funding helps to move the sewer and roadway project forward, as well as the private development in the business park. Once completed, the business park is anticipated to provide around 10,000 new living wage jobs to the community.

CITY COUNCIL ACTION REQUESTED

Motion to authorize the Mayor to sign a letter of appreciation for the Congressionally Directed Spending allocation for the Southwest Chaska Sewer Extension project.

Chaska

April 4, 2022

Senator Amy Klobuchar
425 Dirksen Senate Building
Washington, DC 20510

Senator Tina Smith
720 Hart Senate Building
Washington, DC 20510

Representative Dean Phillips
2452 Rayburn HOB
45 Independence Ave. SW
Washington, DC 20515

Dear Senator Klobuchar, Senator Smith and Representative Phillips,

On behalf of the City of Chaska, please accept this letter of appreciation for your support of city's Congressionally Directed Spending request for the Southwest Chaska Business Park Development project.

The funding you were able to secure for the city, will allow us to begin the construction of the public infrastructure. As you know, with this public infrastructure investment, it will allow the city to open up 360 acres of land for private business and industrial development.

Based upon a market analysis done as part of the Southwest Chaska Plan, it identified this area as a strong demand for biotech and light industrial, which is clacking in the Twin Cities. Currently, there are two approved light industrial developments to be completed in 2022 with a private investment of $91 million and creation of 100 jobs. It is anticipated that over the next ten years, that approximately 10,000 new living wage jobs will be created and that there will be over $890 million in private investment. Not only is this project a benefit to the city and its residents, but it also increases the economic competitiveness of the southwest Twin Cities metro area by offering more living wage jobs, sites for expanding industries, diversifying the types of industries in the region, and growing the customer base for existing businesses.

As the project progresses, we invite you out to Chaska to see the development and hear the impact of the project on the community. Thank you again for your support.

Sincerely,

_____
Mark Windschitl
Mayor

REQUEST FOR ACTION
CHASKA CITY COUNCIL
4/4/2022

Subject: **Letters of Support - State Funding for various County projects**

Prepared By: **Kevin Ringwald, Director of Special Projects**

Carver County is requesting letters of support for a variety of projects for which they are submitting for state funding. These projects are: signalization improvements along Lyman Boulevard (CR 18) & Pioneer Trail (CR 14), road improvements at/near the intersection of Engler Boulevard (CR 10) & Jonathan Carver Parkway (CR 11), and road improvements along Engler Boulevard (CR 10) from TH212 east to Audubon Road (CR 15).

The road improvements have previously had extensive public processes associated with them, which culminated in the City Council approving concept plans for said improvements. These grant, which if approved, would the county to start accumulating the necessary funds to do the designs and plans to move these improvements towards construction.

CITY COUNCIL ACTION REQUESTED

Authorize the Mayor to sign and forward the attached letters of support for various County projects within the City of Chaska.

2022 Regional Solicitation Applications

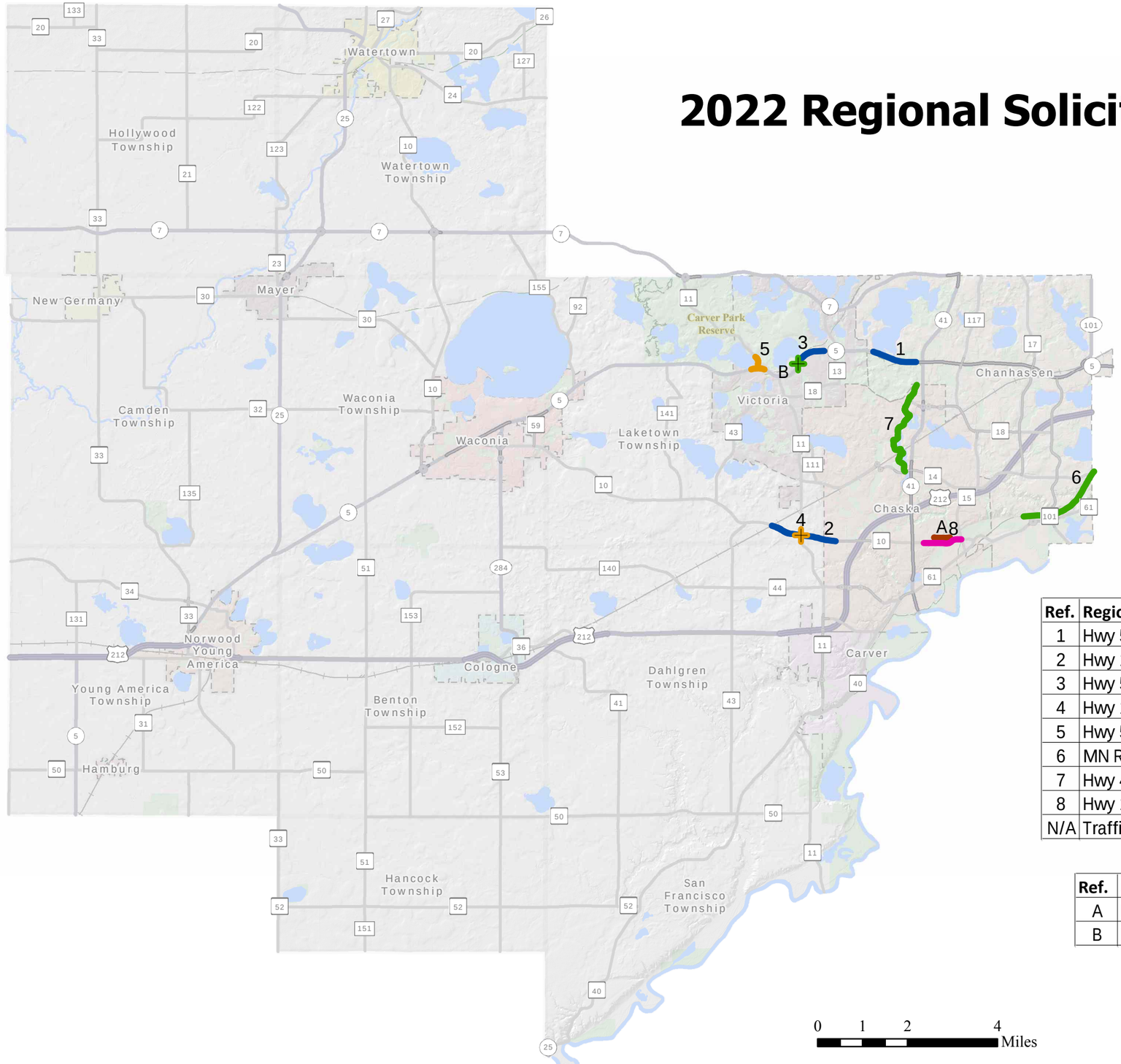

- Strategic Capacity
- Spot Mobility
- Multiuse Trails and Pedestrian
- Safe Routes to School
- Reconstruction

Ref.	Regional Solicitation Applications	Category
1	Hwy 5 from Minnewashta Pkwy to Hwy 41	Strategic Capacity
2	Hwy 10 from west of Hwy 11 to W Creek Ln	Strategic Capacity
3	Hwy 5 from Stieger Lake Ln to east of Park Dr/Kochia Ln	Strategic Capacity
4	Hwy 11/Hwy 10 Intersection	Spot Mobility
5	Hwy 5/Hwy 11 N Intersection	Spot Mobility
6	MN River Bluffs Regional Trail	Multiuse Trails
7	Hwy 41 Ravine Trail	Multiuse Trails
8	Hwy 10 (Engler Blvd) from Park Ridge Dr to Hwy 15 (Audubon Rd)	Reconstruction
N/A	Traffic Signal Technologies & ITS Corridor Enhancements	Traffic Mgmt. Tech

Ref.	City-led Applications	Category
A	Hwy 10 (Engler Blvd) Trail from Ridge Ln to Ravoux Rd	Safe Routes to School
B	Hwy 5 Pedestrian Overpass at 78th St	Pedestrian

This map was created using a compilation of information and data from various City, County, State, and Federal offices. It is not a surveyed or legally recorded map and is intended to be used as a reference. Carver County is not responsible for any inaccuracies contained herein.

CARVER COUNTY
Public Works Division
11360 Hwy 212, Suite 1
Cologne, MN 55322
(952) 466-5200
Created: 2/14/2022

Carver County
Public Works
11360 Highway 212, Suite 1
Cologne, MN 55322

May 5th, 2020

Elaine Koutsoukos
TAB Coordinaor
Metropolitan Council
390 Robert Street North
St. Paul, MN 55101
elaine.koutsoukos@metc.state.mn.us
651-602-1717

Re: Agency Owner / Operator Letter of Support / Project Readiness -- 2020 Regional Solicitation Transportation Grant Funding Request -- Proposed Carver County Traffic Management Technologies Grant Application

Dear Ms. Koutsoukos,

We are writing this letter in support of the subject grant application project. The project for ***Carver County Traffic Signal Technologies and ITS Corridor Enhancements*** is planned to involve County-owned intersections and locations in coordination with but independent from other agencies.

Agency Owner / Operator. As the agency that owns and operates the traffic signal, ITS, and traffic management systems for Carver County, please consider this as a letter of support indicating that we aware of and understand the project being submitted and that we are committed to operating and maintaining the planned facilities year-round for the useful life of the improvements.

County Board Authorization. The Carver County Board is also in support and formally authorized the County Engineer to submit this 2020 Regional Solicitation project application to the Transportation Advisory Board of the Metropolitan Council at its May 5th, 2020 meeting.

Layouts / Plans / Previous Work. We would also like to note that the County has been developing a master plan, construction improvement program, and set of smaller implementable projects to assist in the support of this grant application as well as ongoing planning and updating of its traffic signals and ITS systems and other related traffic management technologies.

Layouts and plans for the subject ITS / Traffic Management Technologies project application have been developed in various major work items. In 2015, Carver County completed a Traffic Signal Communications and ATMS Systems Plan with SRF Consulting Group. This plan included a systems plan and detailed location-based layout plans with a Countywide systems map, fiber-information technology communications plan, and detailed component devices selection and fiber schematics. More information on this plan and the layouts can be found at the subject Project website: https://www.co.carver.mn.us/departments/public-works/projects-studies/traffic-signal-technologies-project-plan

In addition, as noted in the 2015 Traffic Signal Communications Plan, since 2010 Carver County has been investing in a large-scale fiber optic, broadband infrastructure deployment to connect the County's facilities

with a major backbone fiber ring trunk line and a robust, high capacity network. In the last five or more years, and as of the end of 2019, the fiber deployment made localized, dedicated lateral fiber line connections to all the County's existing and planned traffic signal and related ITS locations. With the assistance of the County's CarverLink Fiber Public Services Division, Carver County Public Works has invested in several hundred thousands of dollars to make these localized Traffic Signal / ITS connections project ready for the next stages of a modern advanced traffic management system. To have these fiber connections already in place comes as a substantial major cost savings to such traffic management technologies projects. More information on the County's fiber deployments can be found at the noted Project website.

Project Benefits / Interests. The County's interests in the subject grant application is to take advantage of these previous plans and investments to enable the next steps of additions and upgrades in traffic signal and ITS equipment and systems. The County's 2020 grant application for ***Traffic Signal Technologies and ITS Corridor Enhancements*** would focus on 2-3 major highway corridors to:

- Install the County's first traffic management center, traffic communications and central signal system software for needed modern ITS and traffic signal systems to help improve multi-modal transportation mobility, safety, and operations.

- Replace obsolete, legacy equipment systems with modern, responsive platforms, consistent with the Mn Statewide Regional Architecture ITS Architecture. The County has a list of dated, obsolete equipment and systems, many of which can be seen on Econolite's legacy products list (products like Aries limited zone software; ASC-2 controllers; video detection sensors, and other older generation and retired components.

- Provide and increase inter-operability and coordination with MnDOT and other agencies / systems to cooperatively and collaboratively address the region's mobility issues on arterial street networks. By working across traditional jurisdictional boundaries, agencies provide higher levels of customer service through more consistent systems and objective oriented actions that consider the regional impacts of local activities.

- Work with our partner agencies in Information Technologies (IT) and CarverLink to enable and enhance the County's fiber optic network and the County's IT and ethernet infrastructure to support and operate the traffic signal and ITS traffic management technology systems planned.

- Among other things: Improve traffic flow and air quality; Include innovative treatments, including flashing yellow arrows and vehicle detection at traffic signals; Reduce traffic-related crashes; Minimize travel time; Link and improve coordination and operation of county traffic signals

Carver County appreciates the opportunity to share the proposed plans in the subject project application and looks forward to the Met Council's consideration of federal funds through the Regional Solicitation Programs. If there is anything else needed to support this project and/or the subject application, please let me know.

Sincerely,

Lyndon Robjent, PE
Public Works Director
County Engineer

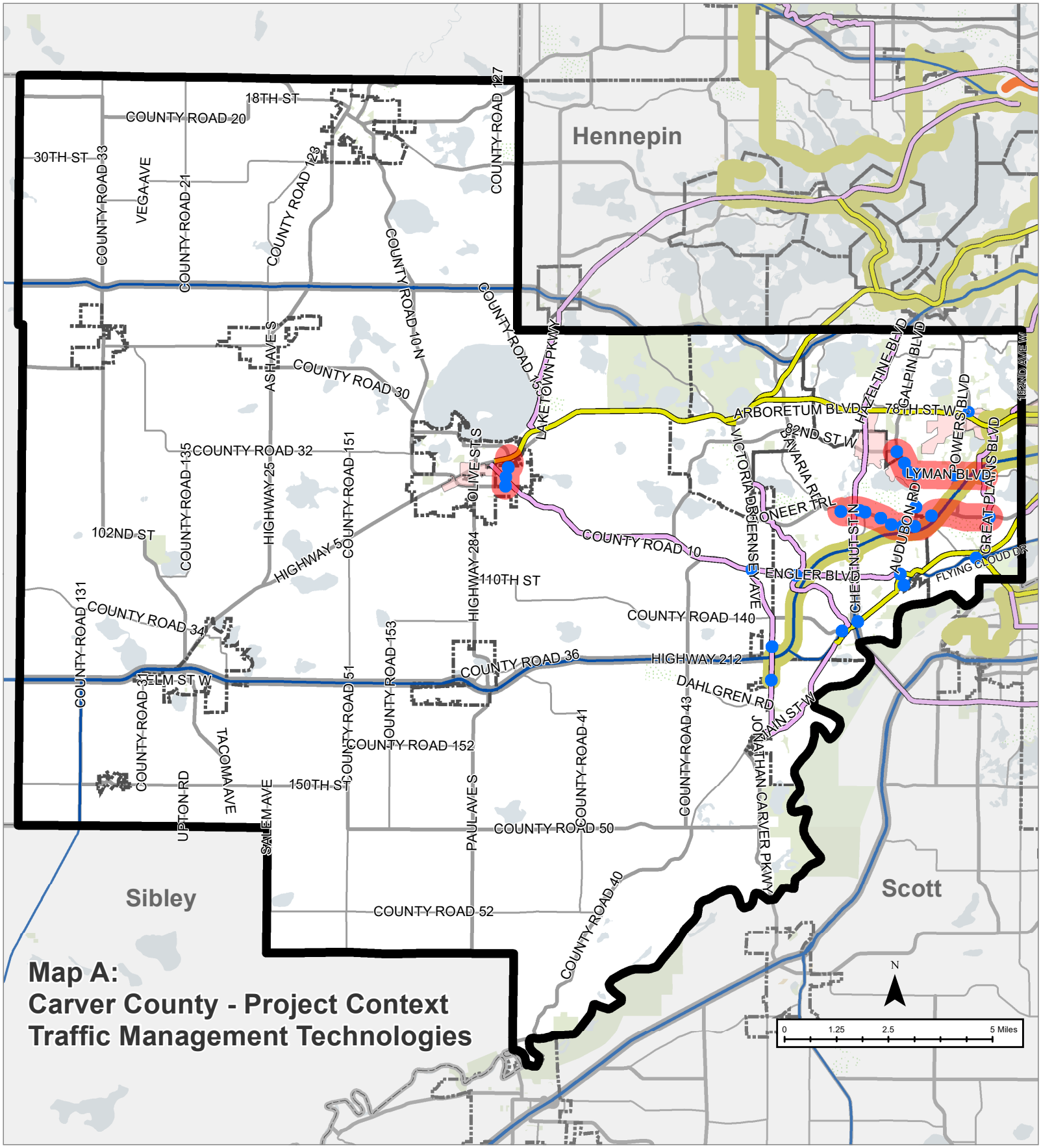

Map A:
Carver County - Project Context
Traffic Management Technologies

RBTN Alignments
- Tier 1
- Tier 2
- Planned Transitway Alignments

Designated Truck Routes
- Designated Truck Routes
- Signalized Intersections (Carver County Jurisdiction)
- Transit Routes

Functional Classification
- Principal Arterials
- A-Minor Arterials
- Other

- Job/Activity Centers
- Cities
- Project Corridors

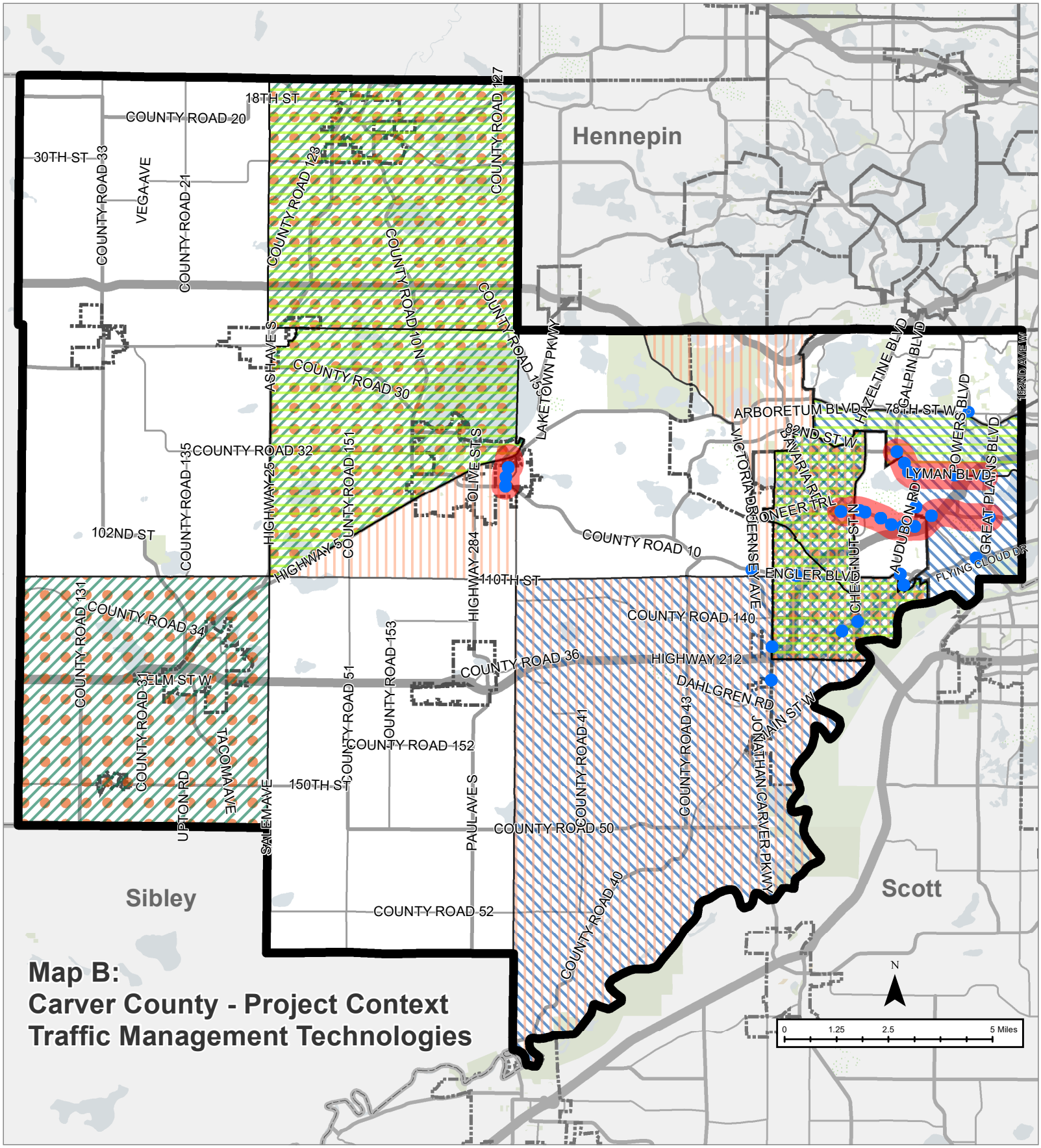

Map B:
Carver County - Project Context
Traffic Management Technologies

Population 65 and older (top 5 census tracts by #)

Population younger than 18 (top 5 census tracts by #)

Population with a disability (top 5 census tracts by #)

Non-white population (top 5 census tracts by #)

Households with income less than $25,000 (top 5 census tracts by #)

Cities

Signalized Intersections (Carver County Jurisdiction)

Project Corridors

Functional Classification

Principal

A-Minor

Other

Project Summary

Traffic Signal Technologies and ITS Corridor Enhancements

Applicant: Carver County

May 15, 2020

Project Overview

Carver County uses traffic signals to support safe and efficient multimodal transportation for County residents, businesses, employees, and visitors. The County is requesting a federal grant to upgrade obsolete and add to existing traffic management and intelligent transportation systems (ITS) throughout Carver County, with a focus on CSAH 18-Lyman Boulevard (Chanhassen/Carver), CSAH 14-Pioneer Trail (Chanhassen/Carver), CSAH 59-Main Street (Waconia), and other intersections. The project scope will include:

- A new Advanced Traffic Management System (ATMS)
- Central signal system software with expanded remote access and operations
- Upgraded traffic signal controllers and cabinets
- Conflict monitors
- Upgraded timing plans, coordination, and video detection systems
- ITS devices including CCTV cameras
- Communications and fiber optic cable upgrades & connections

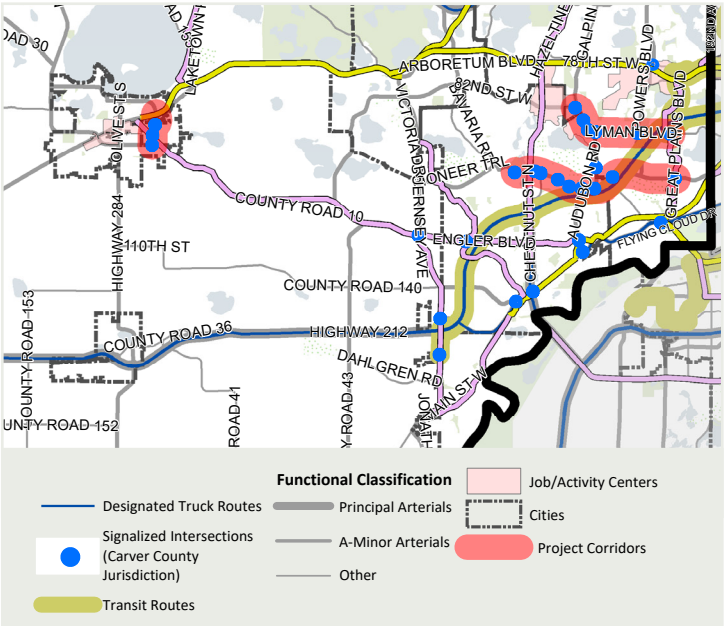

Project Area

Project Benefits

The roadway system management project will provide a more responsive, efficient, future-minded, and smart traffic control system. The project will:

- Link and improve coordination, operation, and interoperability of County-owned signals and with other jurisdictions
- Reduce traffic-related crashes, minimize travel time, and better support incident management and special events
- Support environmental sustainability and air quality by improving traffic flow
- Include innovative treatments such as flashing yellow arrows and vehicle detection at traffic signals consistent with Regional ITS Architecture and best practices
- Improve bicycle and pedestrian access and safety by installing accessible pedestrian signals

Existing Carver County Traffic Signal

Project Schedule

- **Design:** Summer 2021-Summer 2024
- **Right-of-way:** Not anticipated
- **Bidding:** Fall 2024-Winter 2025
- **Construction:** Spring-Fall 2025

Requested Federal Amount

$1,580,000

Total Project Cost

$1,975,000

CONTACT:

Dan McCormick, Transportation Manager
Carver County Public Works
952.466.5208
dmccormick@co.carver.mn.us
https://www.co.carver.mn.us/departments/public-works/projects-studies/traffic-signal-technologies-project-plan

If you need this material in another format, please contact us at carvercountypw@co.carver.mn.us or at 952.466.5200 and provide your name, contact information, and preferred alternate format.

Project Summary

Traffic Signal Technologies and ITS Corridor Enhancements

Applicant: Carver County

May 15, 2020

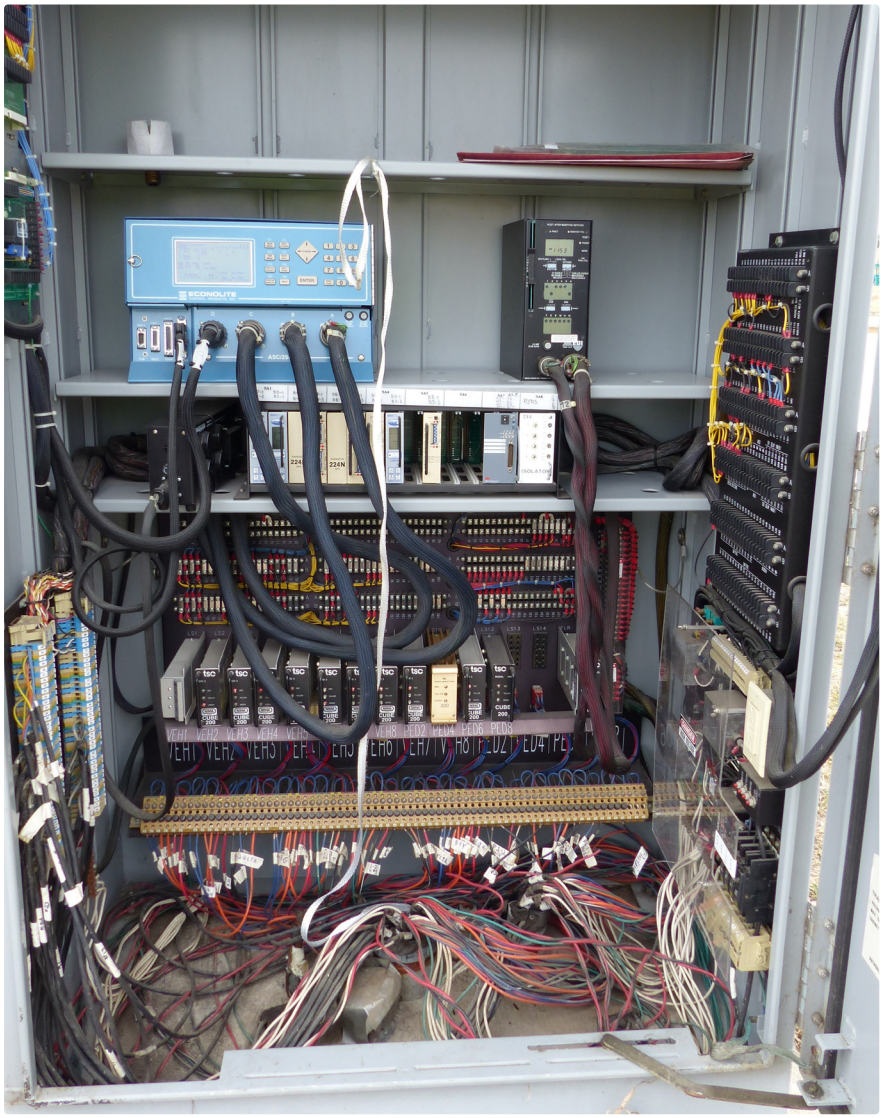

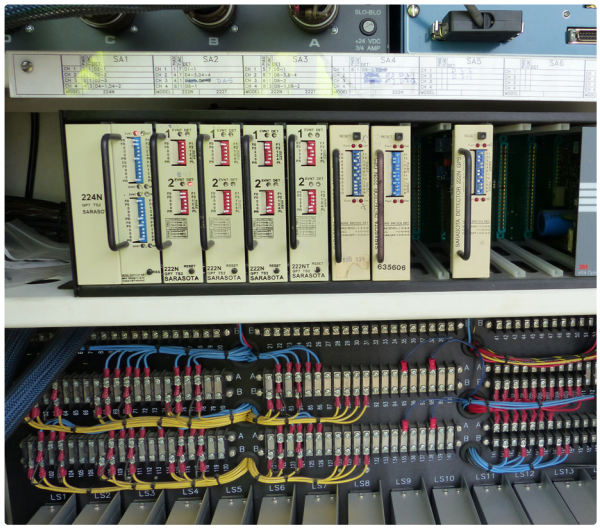

Existing Carver County Signal Cabinets

CONTACT:

Dan McCormick, Transportation Manager
Carver County Public Works
952.466.5208
dmccormick@co.carver.mn.us
https://www.co.carver.mn.us/departments/public-works/projects-studies/traffic-signal-technologies-project-plan

If you need this material in another format, please contact us at carvercountypw@co.carver.mn.us or at 952.466.5200 and provide your name, contact information, and preferred alternate format.

CITY OF CHASKA
ONE CITY HALL PLAZA / CHASKA MN 55318-1962

April 5, 2022

Lyndon Robjent, PE
Public Works Director, County Engineer
Carver County Public Works
11360 Highway 212, Suite 1
Cologne, MN 55322

Dear Mr. Robjent,

The City of Chaska is pleased to support Carver County's application for the Traffic Signal Technologies and ITS Corridor Enhancements project to the Metropolitan Council's 2022 Regional Solicitation for federal transportation funding. The project will improve signal technologies at County-owned intersections and locations along three primary corridors including County State Aid Highway (CSAH) 14 (Pioneer Trail) in the City of Chaska.

The grant application is to upgrade obsolete and add to existing traffic management and intelligent transportation systems (ITS) throughout Carver County, with a focus on three corridors: CSAH 18 (Lyman Blvd.), CSAH 14 (Pioneer Trail), and CSAH 59 (Main St.). The proposed project scope includes: a new Advanced Traffic Management System (ATMS); central signal system software with expanded remote access and operations; upgraded traffic signal controllers and cabinets; conflict monitors; upgraded timing plans, coordination, and video detection systems; ITS devices including CCTV cameras; and communications and fiber optic cable upgrades and connections.

Project benefits include creating a more responsive, efficient, future-minded, and smart traffic control system. The project will link and improve coordination, operation, and interoperability of County-owned signals and with other jurisdictions, reduce traffic-related crashes, minimize travel time, and better support incident management and special events.

The proposed project is endorsed by the City of Chaska, and we are supportive of the County's application for the Traffic Signal Technologies and ITS Corridor Enhancements project to the Metropolitan Council's 2022 Regional Solicitation funding program.

Sincerely,

Mark Windschitl, Mayor
City of Chaska

Phone: 952-448-9200 **Fax: 952-448-9300** www.chaskamn.com

BOLTON & MENK

PROPOSED CONDITIONS

HIGHWAY 11 INTERSECTION IMPROVEMENTS PROJECT

mikelg pdf-color.pltcfg bmi.tbl 5/12/2020 11:47:39 AM H:\CACO\T44117142\CAD\MS\figures\Regional Solicitation\proposed_01_west.dgn

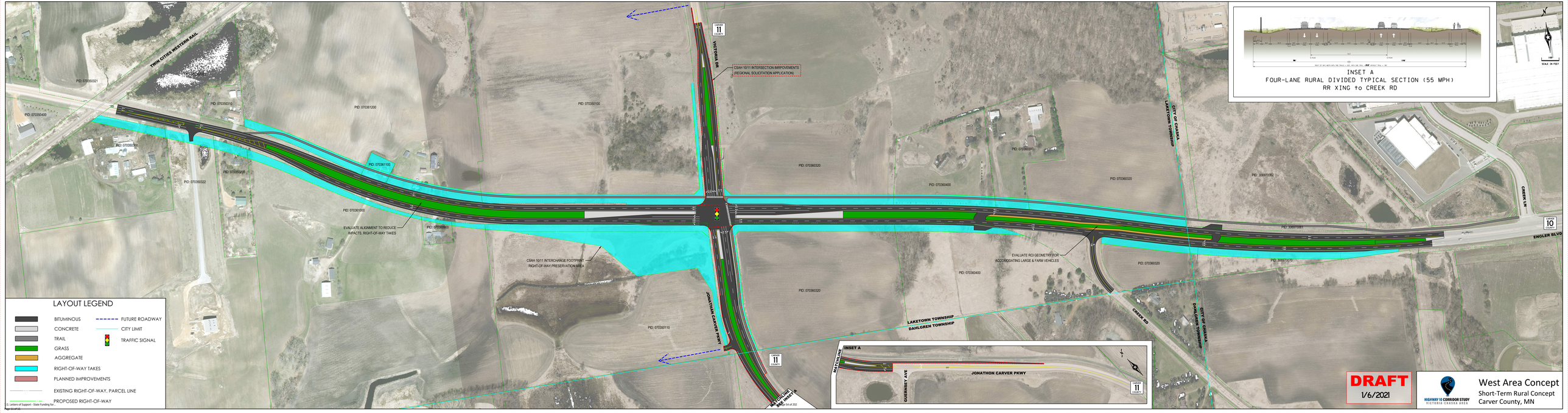
INSET A
FOUR-LANE RURAL DIVIDED TYPICAL SECTION (55 MPH)
RR XING to CREEK RD
SCALE IN FEET
TWIN CITIES WESTERN RAIL
VICTORIA DR
CSAH 10/11 INTERSECTION IMRPOVEMENTS (REGIONAL SOLICITATION APPLICATION)
CSAH 11
CSAH 10
JONATHAN CARVER PKWY
CREEK RD
CREEK LN
ENGLER BLVD
LAKETOWN TOWNSHIP
DAHLGREN TOWNSHIP
CITY OF CHASKA
EVALUATE ALIGNMENT TO REDUCE IMPACTS, RIGHT-OF-WAY TAKES
CSAH 10/11 INTERCHANGE FOOTPRINT RIGHT-OF-WAY PRESERVATION AREA
EVALUATE RCI GEOMETRY FOR ACCOMODATING LARGE & FARM VEHICLES
LAYOUT LEGEND
BITUMINOUS
CONCRETE
TRAIL
GRASS
AGGREGATE
RIGHT-OF-WAY TAKES
PLANNED IMPROVEMENTS
EXISTING RIGHT-OF-WAY, PARCEL LINE
PROPOSED RIGHT-OF-WAY
FUTURE ROADWAY
CITY LIMIT
TRAFFIC SIGNAL
INSET A
JONATHON CARVER PKWY
GUERNSEY AVE
DRAFT
1/6/2021
West Area Concept
Short-Term Rural Concept
Carver County, MN
HIGHWAY 10 CORRIDOR STUDY
VICTORIA CHASKA BOCR

CITY OF CHASKA
ONE CITY HALL PLAZA / CHASKA MN 55318-1962

April 5, 2022

Lyndon Robjent, P.E.
Public Works Director, County Engineer
Carver County Public Works
11360 Highway 212, Suite 1, Cologne, MN 55322

Dear Mr. Robjent,

The City of Chaska is pleased to support Carver County's application for the Highway 11 Intersection Improvement Project under the Roadway Spot Mobility and Safety category of the Metropolitan Council's 2022 Regional Solicitation for federal transportation funding.

The proposed improvement includes reconstruction and widening of the CSAH 11 (Victoria Dr./Jonathan Carver Pkwy.) and CSAH 10 (Engler Blvd.) intersection including additional through lanes and turn lanes and a permanent traffic signal system. The project will also include bicycle and pedestrian accommodations at the intersection.

This low-cost, high-benefit project will address existing operational and safety issues and provide needed regional highway infrastructure in this fast-growing area. CSAH 10 is a critical east-west mobility corridor for the County's regional transportation network connecting the Cities of Waconia and Victoria to the City of Chaska and US Highway 212. The intersection design at CSAH 10/CSAH 11 lacks the through-put and turn lanes to operate at an acceptable level of service for everyday traffic and has a wood-pole signal system that was installed as a short-term mitigation strategy for severe crashes.

The proposed project is endorsed by the City of Chaska, and we are supportive of the County's application to the Metropolitan Council's 2022 Regional Solicitation funding program.

Sincerely,

Mark Windschitl, Mayor
City of Chaska

Phone: 952-448-9200 Fax: 952-448-9300 www.chaskamn.com

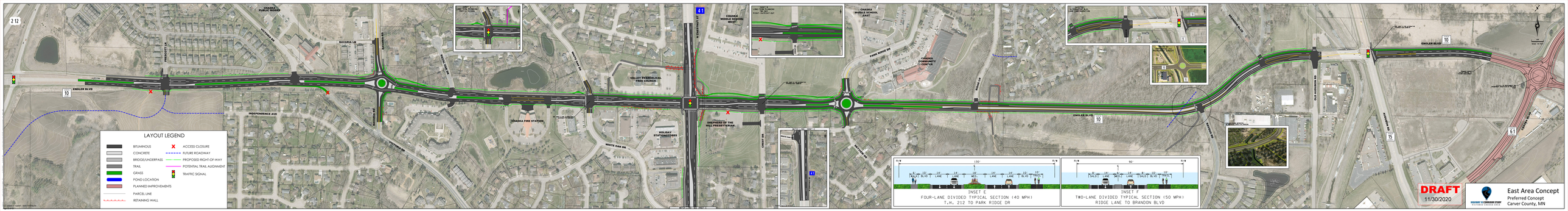
212
CHASKA PUBLIC WORKS
SAVANNA LN
ENGLER BLVD
INDEPENDENCE AVE
CHASKA FIRE STATION
VALLEY EVANGELICAL FREE CHURCH
CHASKA MIDDLE SCHOOL WEST
CHASKA HIGH SCHOOL EAST
CHASKA COMMUNITY CENTER
HOLIDAY STATIONSTORES
SHEPHERD OF THE HILL PRESBYTERIAN
WHITE OAK DR
PARK RIDGE DR
CHURCH RD
CHERRY LN
HAZELNUT DR
OLD SHAKOPEE RD
BRANDON BLVD
41
10
15
61
LAYOUT LEGEND
BITUMINOUS
CONCRETE
BRIDGE/UNDERPASS
TRAIL
GRASS
POND LOCATION
PLANNED IMPROVEMENTS
PARCEL LINE
RETAINING WALL
ACCESS CLOSURE
FUTURE ROADWAY
PROPOSED RIGHT-OF-WAY
POTENTIAL TRAIL ALIGNMENT
TRAFFIC SIGNAL
R/W
130'
90'
8' BLVD
10' TRAIL
14' LANE
18' MED.
14' LANE
10' TRAIL
8' BLVD
INSET E
FOUR-LANE DIVIDED TYPICAL SECTION (40 MPH)
T.H. 212 TO PARK RIDGE DR
INSET F
TWO-LANE DIVIDED TYPICAL SECTION (50 MPH)
RIDGE LANE TO BRANDON BLVD
DRAFT
11/30/2020
MINNESOTA DEPARTMENT OF TRANSPORTATION
METROPOLITAN COUNTIES DISTRICT
East Area Concept
Preferred Concept
Carver County, MN

CITY OF CHASKA
ONE CITY HALL PLAZA / CHASKA MN 55318-1962

April 5, 2022

Lyndon Robjent, P.E.
Public Works Director, County Engineer
Carver County Public Works
11360 Highway 212, Suite 1, Cologne, MN 55322

Dear Mr. Robjent,

The City of Chaska is pleased to support Carver County's application for the Highway 10 Chaska Corridor Reconstruction Improvement under the Roadway Reconstruction and Modernization category of the Metropolitan Council's 2022 Regional Solicitation for federal transportation funding. The proposed improvement includes reconstruction of County State Aid Highway (CSAH) 10 (Engler Blvd.) from east of Park Ridge Dr. to CSAH 15 (Audubon Rd.) including bicycle and pedestrian improvements throughout the corridor.

The project will retrofit a 2-lane rural highway section to a 2-lane urban divided section, implement access management strategies, and most notably address a critical gap in the bicycle and pedestrian infrastructure. The addition of a multi-use regional trail along this segment of CSAH 10 will provide a connection for disadvantaged populations to connect to the Chaska school and community center complex and will connect to existing trail facilities along Audubon Rd., the Minnesota River Bluffs Regional Trail, and along Highway 41.

The City of Chaska partnered with Carver County, the Minnesota Department of Transportation (MnDOT), and the City of Victoria, on the Highway 10 Corridor Study to identify coordinated roadway improvements to address significant existing transportation mobility, safety, and access issues on the CSAH 10 (Engler Blvd.) corridor through Chaska. The Highway 10 Corridor Study included a robust technical analysis, concept development, concept evaluation, and a diversified and broad public engagement strategy to identify and build consensus for short and long-term roadway concepts and recommendations. The proposed project is consistent with the study, which was adopted by the City and County in 2021.

The City of Chaska supports the County's application for the Highway 10 Chaska Corridor Reconstruction Improvement to the Metropolitan Council's 2022 Regional Solicitation funding program and acknowledges potential City cost-share in the project.

Sincerely,

Mark Windschitl, Mayor
City of Chaska

Phone: 952-448-9200 Fax: 952-448-9300 www.chaskamn.com

CITY OF CHASKA
ONE CITY HALL PLAZA / CHASKA MN 55318-1962

April 5, 2022

Lyndon Robjent, P.E.
Public Works Director, County Engineer
Carver County Public Works
11360 Highway 212, Suite 1, Cologne, MN 55322

Dear Mr. Robjent,

The City of Chaska is pleased to support Carver County's application for the Highway 10 Mobility and Access Corridor Improvement under the Roadway Strategic Capacity category of the Metropolitan Council's 2022 Regional Solicitation for federal transportation funding.

The proposed project will reconstruct and expand County State Aid Highway (CSAH) 10 from west of CSAH 11 to W Creek Ln. with intersection safety and mobility improvements and bicycle and pedestrian improvements throughout the corridor. The project will provide substantial safety and capacity benefits by expanding the existing 2-lane rural highway section to a 4-lane section, implementing access management strategies, and constructing a regional trail facility to serve the bicycle and pedestrian users along the corridor.

The City of Chaska partnered with Carver County, the Minnesota Department of Transportation (MnDOT), and the City of Victoria, on the Highway 10 Corridor Study to identify coordinated roadway improvements to address significant existing transportation mobility, safety, and access issues on the CSAH 10 (Engler Blvd.) corridor through Chaska. The Highway 10 Corridor Study included a robust technical analysis, concept development, concept evaluation, and a diversified and broad public engagement strategy to identify and build consensus for short and long-term roadway concepts and recommendations. The proposed project is consistent with the study, which was adopted by the City and County in 2021.

The City of Chaska supports the County's application for the Highway 10 Mobility and Access Corridor Improvement to the Metropolitan Council's 2022 Regional Solicitation funding program and acknowledges potential City cost-share in the project.

Sincerely,

Mark Windschitl, Mayor
City of Chaska

Phone: 952-448-9200 Fax: 952-448-9300 www.chaskamn.com

REQUEST FOR ACTION
CHASKA CITY COUNCIL
04/04/2022

Subject: **Authorizing Bank Account Signers and Authorization of Electronic Funds Transfer**

Prepared By: Noel Graczyk, Administrative Services Director
Kelly Grinnell, Finance Manager

Background
As part of the current ongoing annual City audit, the auditors have advised that the City Council authorize by resolution instead of by motion authorized bank account signers on depository accounts. The auditors have also advised that in accordance with Minnesota Statute 471.38 that the City Council by resolution designate officials of the City that are authorized to act for the City when electronic funds transfers are used to issue payments.

The proposed resolution delegates authority to make electronic funds transfers to the Administrative Services Director / Treasure and Finance Manager or their designee. These authorizations and supporting controls as required by the State Statute and are consistent with workflow currently in place for submission and approval of electronic funds transfers.

Recommendation
Staff recommends approval of the resolution.

CITY COUNCIL ACTION REQUESTED
Motion to adopt Resolution 2022-35 Authorizing Bank Account Signers and Authorization of Electronic Funds Transfer.

CITY OF CHASKA
CARVER COUNTY, MINNESOTA

RESOLUTION

DATE 04/04/2022 RESOLUTION NO. 2022-35

MOTION BY COUNCILMEMBER_____ SECOND BY COUNCILMEMBER_____

A RESOLUTION AUTHORIZING BANK SIGNERS AND AUTHORIZATION OF ELECTRONIC FUNDS TRANSFER

WHEREAS, in accordance with the Minnesota Statutes 471.38, the City Council shall annually delegate authority to make electronic funds transfers and the disbursing bank of electronic funds transfers shall keep on file a certified copy of the delegation of authority.

WHEREAS, Minnesota Statutes Section 471.38 allows the use of electronic funds transfer provided certain policy controls are in place for payment of the following:

1. for a claim for a payment from an impressed payroll bank account or investment of excess money;
2. for payment of tax or aid anticipation certificates;
3. for a payment of contributions to pension or retirement fund;
4. for vendor payments; and,
5. for payment of bond principal, bond interest, and a fiscal agent service charge.

WHEREAS, all electronic funds transfers shall be processed through the accounts payable procedures.

WHEREAS, all electronic funds transfer shall document and comply with policy controls that include:

1. the initiator of the electronic transfer shall be identified;
2. the initiator shall document the request and obtain an approval from the designated Administrative Services Director / Treasurer, the Finance Manager or their designee before initiating the transfer as required by internal control policies;
3. a written confirmation of the transaction shall be made no later than one business day after the transaction and shall be used in lieu of a check, order check or warrant required to support the transaction;
4. a list of transactions made by electronic funds transfer shall be submitted to the City Council at its next regular meeting after the transaction.

NOW, THEREFORE, BE IT RESOLVED, by the City Council of the City of Chaska, Minnesota, that checks, drafts, or other withdrawal orders issued against the funds of the City of Chaska on deposit with a bank shall be signed by the following City Officials:

Mayor	Mark Windschitl
City Administrator	Matt Podhradsky
Administrative Services Director / Treasurer	Noel Graczyk

BE IT FURTHER RESOLVED, that the City of Chaska City Council delegates authority to make electronic funds transfers to the following designated positions and individuals or their designee subject to the policy controls and authorization in accordance with Minnesota Statute 471.38:

Administrative Services Director / Treasurer	Noel Graczyk
Finance Manager	Kelly Grinnell

Passed and adopted by the City Council of the City of Chaska, Minnesota, this 4th day of April, 2022.

_____
Mark Windschitl, Mayor

Attest:_____
Chaska Deputy Clerk

REQUEST FOR ACTION
CHASKA CITY COUNCIL
4/4/2022

Subject: The LOOP clubhouse and maintenance building

Prepared By: John Kellin, Head Golf Professional

Background

As Council is aware, construction is underway at The Loop, and the work on the course is expected to be completed later this summer. Staff has been working with architects on developing plans for a clubhouse and maintenance building. The clubhouse is planned to be built in early summer to be ready for the soft opening anticipated around Labor Day. The maintenance facility will be built later this fall after maintenance activities subside for the grounds crew.

Estimated Project Costs

The budget for this project was originally programmed to be $1.4 million. However, with inflation, cost estimates are coming in higher. Below is a revised estimated project cost:

Clubhouse building	$732,000
Maintenance facility	$1,023,600
Building design fee	$360,000
Value engineered reductions	($33,000)
Barrier Free contribution	($105,000)
Self-performed Chaska Public Works contribution	($160,000)
TOTAL	**$1,817,600**

The city will be financing this project (25 years at 3.5%). The debt service would be $108,000 per year and would be paid initially from operating revenues. The Electric Fund will be used as a backup if operating revenues are short.

Timeline

Staff anticipates bringing final bids in time for the first meeting in May after necessary publication time. Nothing will move forward until the Council approves the bids. While this is an open bidding process, staff will ensure that local contractors are aware of the project.

CITY COUNCIL ACTION REQUESTED

Motion to establish the budget and authorize staff to go out for bid for construction of clubhouse and maintenance building.

THE LOOP AT CHASKA

CLUBHOUSE AND MAINTENANCE FACILITY

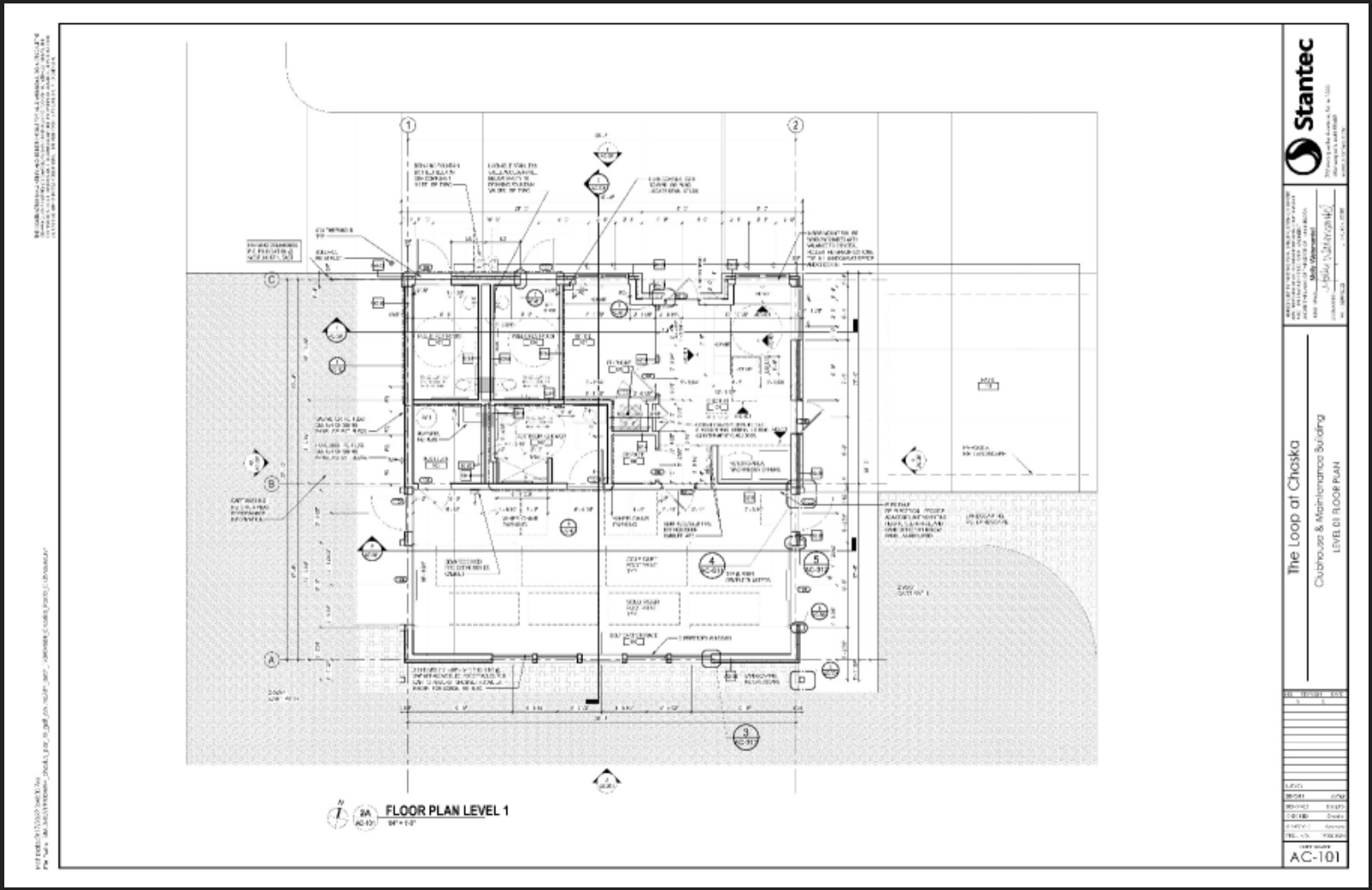

THE LOOP AT CHASKA
CLUBHOUSE FLOOR PLAN

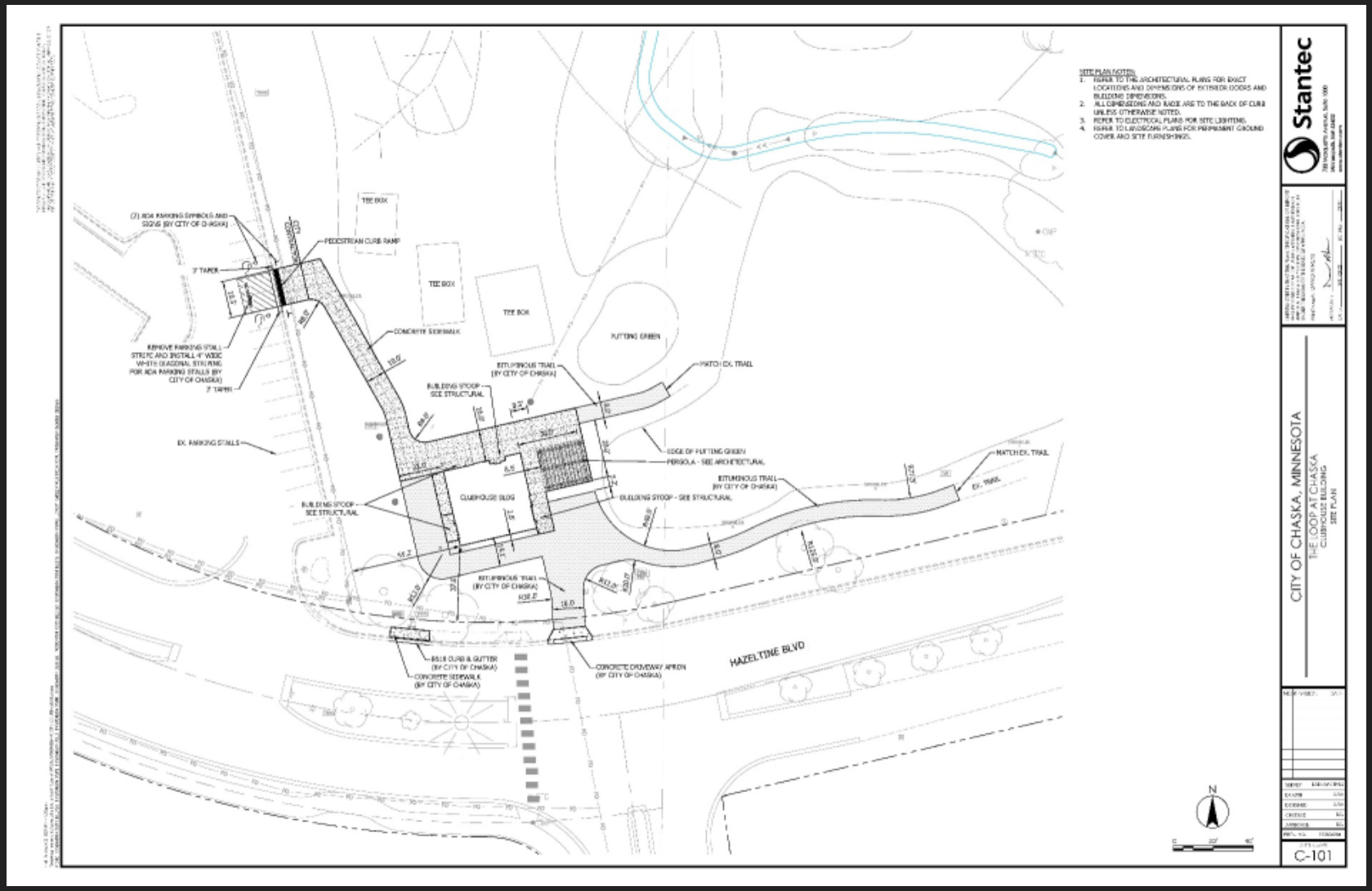

THE LOOP AT CHASKA

CLUBHOUSE SITE PLAN

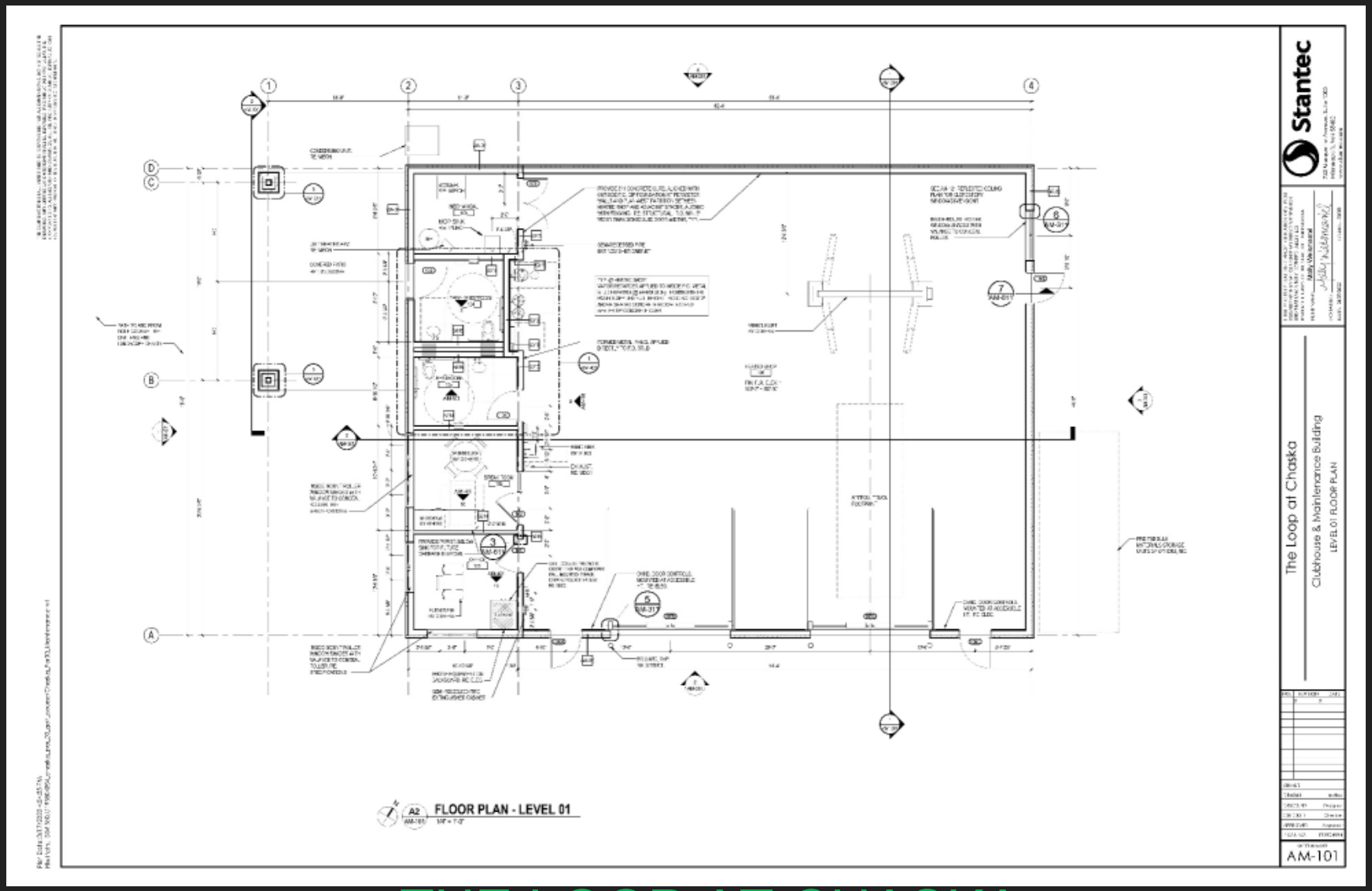

THE LOOP AT CHASKA

MAINTENANCE FLOOR PLAN

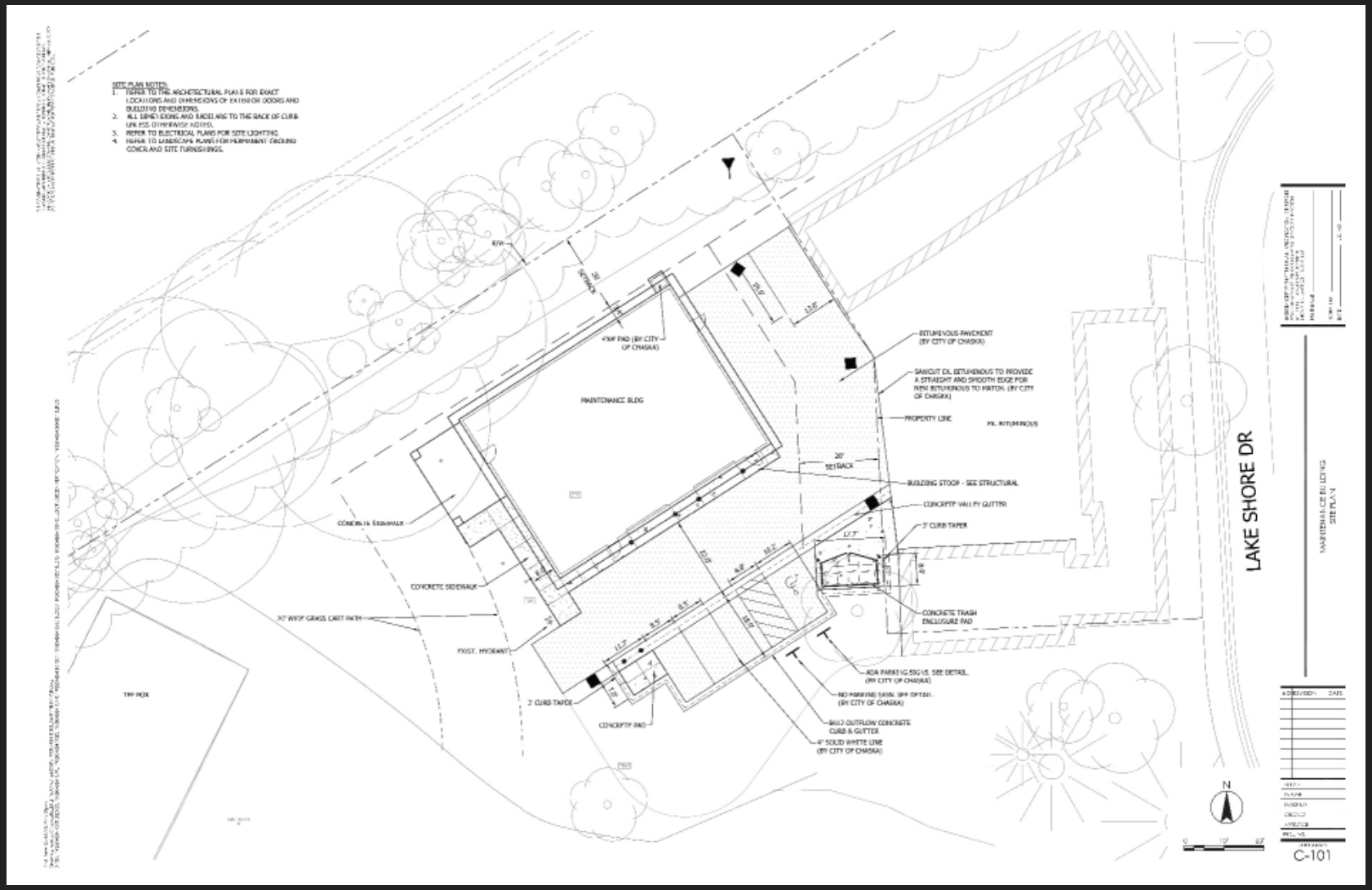

THE LOOP AT CHASKA

MAINTENANCE SITE PLAN

CLUBHOUSE PERSPECTIVE VIEW LOOKING WEST
Stantec

CLUBHOUSE PERSPECTIVE VIEW LOOKING SOUTH
Stantec

CLUBHOUSE PERSPECTIVE VIEW LOOKING NORTH
Stantec

CLUBHOUSE AERIAL VIEW LOOKING EAST
Stantec

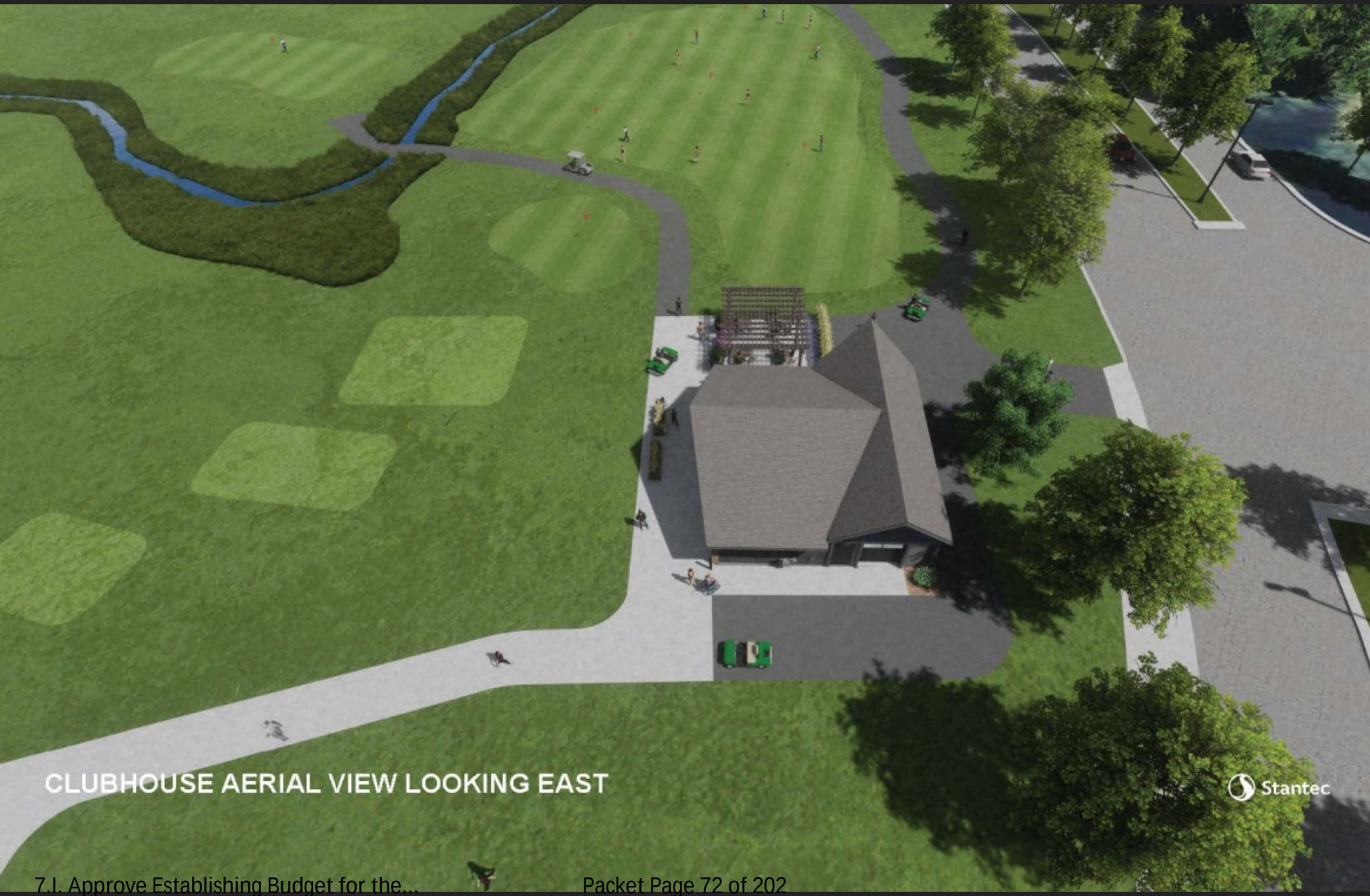
CLUBHOUSE AERIAL VIEW LOOKING EAST
Stantec

CLUBHOUSE AERIAL VIEW LOOKING WEST
Stantec

COURSE AERIAL VIEW LOOKING NORTH
Stantec

MAINTENANCE BUILDING PERSPECTIVE VIEW LOOKING WEST
Stantec

RESTROOMS
RESTROOMS
MAINTENANCE BUILDING PERSPECTIVE VIEW LOOKING EAST
Stantec

ESTIMATED PROJECT COSTS

CLUBHOUSE BUILDING……..	$732,300
MAINTENANCE FACILITY…….	$1,023,600
VALUE ENGINEERED REDUCTIONS……	($33,000)
BUILDING DESIGN FEE……	$360,000
BARRIER FREE CONTRIBUTION……..	($105,000)
SELF PERFORMED CHASKA PUBLIC WORKS CONTRIBUTION...	($160,000)
GRAND TOTAL……	**$1,817,900**

THE LOOP AT CHASKA
ESTIMATED PROJECT COSTS

THE LOOP AT CHASKA

QUESTIONS?

REQUEST FOR ACTION
CHASKA CITY COUNCIL
4/04/2022

Subject: **Construction Plans for 2022 Street and Utility Reconstruction Project**

Prepared By: **Matt Clark, City Engineer**

The City Council recently approved the Feasibility Study and ordered the improvements for the 2022 Street Reconstruction Project. Consistent with previous presentations, the work includes the complete reconstruction of the streets shown in red on the attached exhibit. The construction plans are complete and attached for Council's consideration.

CITY COUNCIL ACTION REQUESTED

Motion to adopt Resolution No. 2022-36, approving the construction documents for the 2022 Street & Utility Reconstruction Project, and authorizing the solicitation of public bids.

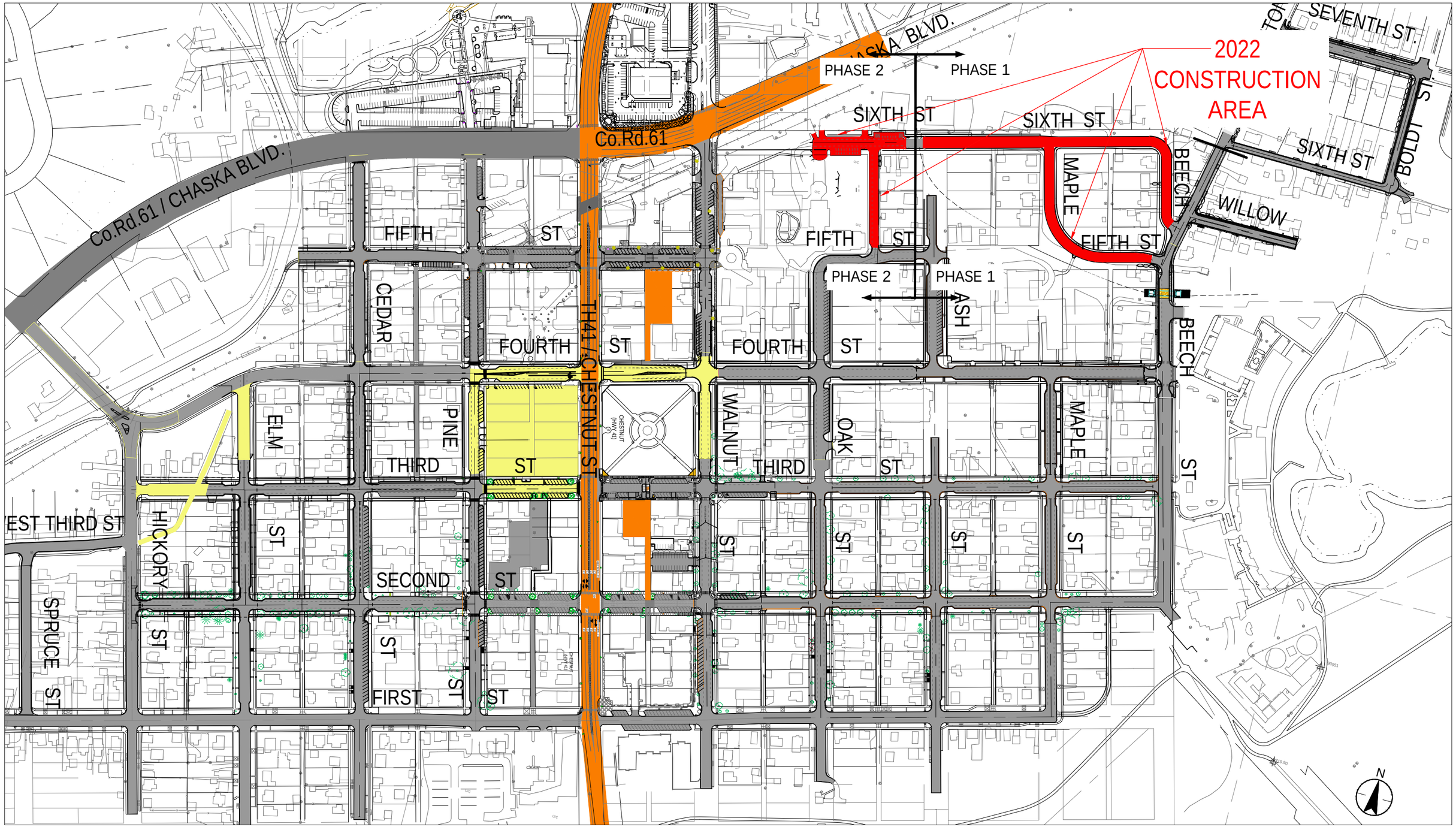

DOWNTOWN CHASKA MASTER STREET LAYOUT

CHASKA, MINNESOTA

2022 DOWNTOWN RECONSTRUCTION

Date: 01/14/2022 PROJ. NO.: 193800229

RECONSTRUCTED STREETS

FUTURE STREET RECONSTRUCTION

2022 DOWNTOWN RECONSTRUCTION

2022-2023 - TH 41 / CHESTNUT ST. & CSAH 61 / CHASKA BLVD. RECONSTRUCTION.

FIGURE A-2

Stantec

733 Marquette Avenue, Suite 1000
Minneapolis, MN 55402
www.stantec.com

CITY OF CHASKA

CARVER COUNTY, MINNESOTA

RESOLUTION

DATE 4/5/2022 RESOLUTION NO. 2022-36

MOTION BY COUNCILMEMBER_____ SECOND BY COUNCILMEMBER_____

A Resolution Approving the Plans & Specifications and Authorizing Bids for the 2022 Downtown Street Reconstruction Project

---

WHEREAS, pursuant to City Council authorization, the City Engineer has prepared plans and specifications for 2022 Downtown Street & Utility Reconstruction Project;

NOW, THEREFORE, BE IT RESOLVED, that the City Council of the City of Chaska, Minnesota, does hereby approve:

1. Such plans and specifications as prepared by Stantec, copies of which are attached hereto and made a part hereof;

2. The City Clerk shall prepare and cause to be published in the Chaska Herald an advertisement for bids upon the making of such improvements under such approved plans and specifications. Said bid process shall adhere to all provisions of State Statute.

Passed and adopted by the City Council of the City of Chaska, Minnesota, this 4th day of April 2022.

_____

Mark Windschitl, Mayor

Attest: _____

Deputy Clerk

THE CONTRACTOR SHALL VERIFY AND BE RESPONSIBLE FOR ALL DIMENSIONS. DO NOT SCALE THE DRAWING. ANY ERRORS OR OMISSIONS SHALL BE REPORTED TO STANTEC WITHOUT DELAY. THE COPYRIGHTS TO ALL DESIGNS AND DRAWINGS ARE THE PROPERTY OF STANTEC. REPRODUCTION OR USE FOR ANY PURPOSE OTHER THAN THAT AUTHORIZED BY STANTEC IS FORBIDDEN.

CITY OF CHASKA

2022 DOWNTOWN RECONSTRUCTION
E. SIXTH ST./ OAK ST. N./
N. MAPLE ST.

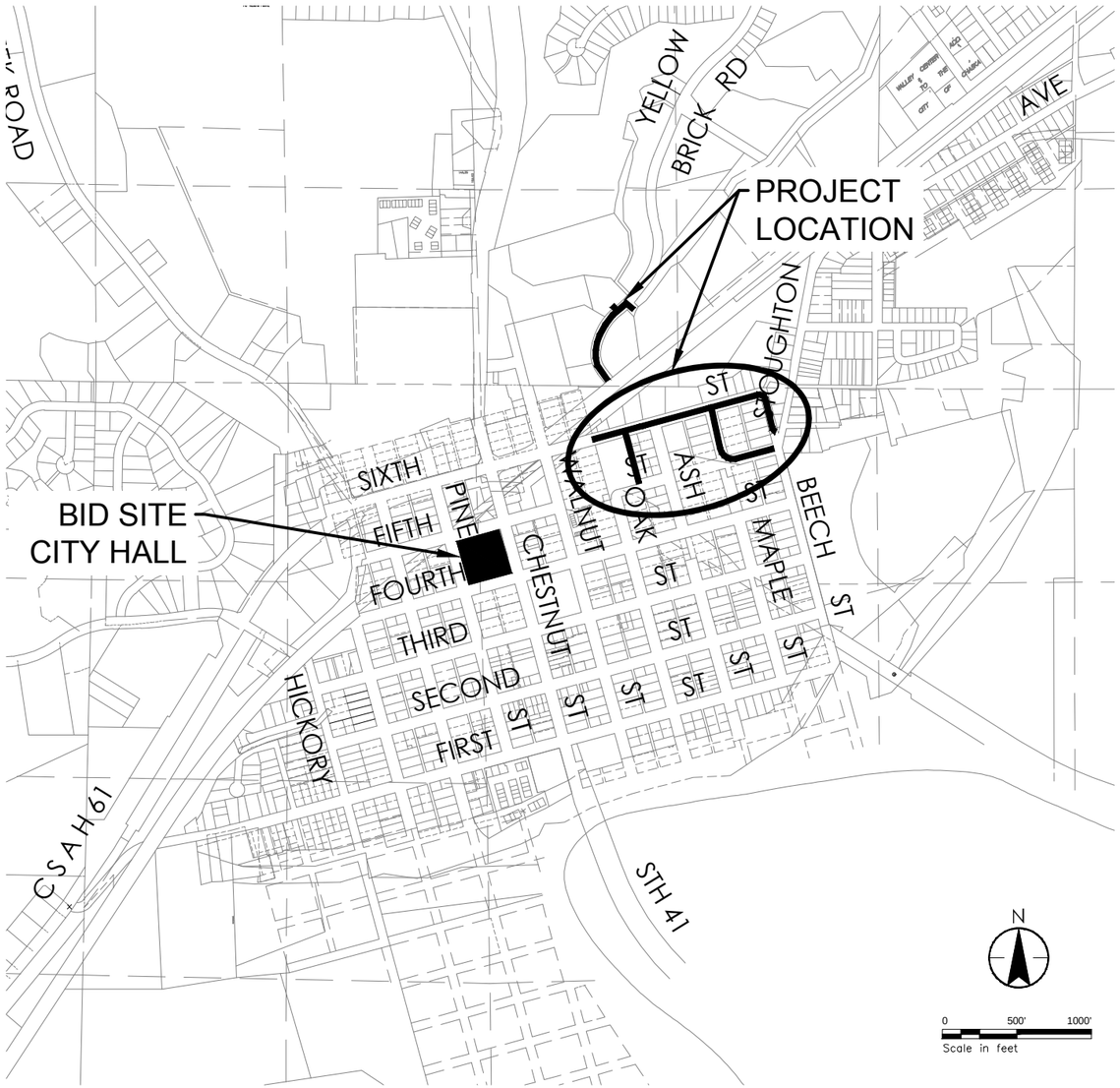

VICINITY MAP

CHASKA, MINNESOTA

CITY OF CHASKA
CITY HALL
1 CITY HALL PLAZA
CHASKA, MN 55318
PH: (952) 448-9200

SHEET NO.	DESCRIPTION
	E. SIXTH ST./ OAK ST. N./ N. MAPLE ST.
G001	TITLE SHEET, LOCATION PLAN, SHEET INDEX
G002	PLAN LEGEND
300G	SEITITNAUQ FO SISAB ,SETALP DRADNATS ,SNOITLAUBAT
G004	GENERAL PROJECT NOTES
G005	CONSTRUCTION PHASING
C001 - C006	EXISTING CONDITIONS AND REMOVALS
C101 - C103	TYPICAL SECTIONS
C201	EROSION CONTROL & TURF ESTABLISHMENT
C202	SWPPP
C401 - C406	SANITARY SEWER & WATERMAIN IMPROVEMENTS
C501 - C506	STORM SEWER IMPROVEMENTS
C601 - C606	ROADWAY IMPROVEMENTS
C60X - C604	INTERSECTION DETAILS
C701 - C70X	CROSS SECTIONS
T901	SIGNING & STRIPING PLAN
T902	TRAFFIC CONTROL PLAN
C801	SANITARY SEWER DETAILS
C802	WATER MAIN DETAILS
C803	STORM SEWER DETAILS
C804 - C805	ROADWAY & EROSION CONTROL DETAILS
C806 - C811	MNDOT STANARD PLAN SHEET - PEDESTRIAN CURB RAMP DETAILS
C812 - C815	MNDOT STANARD PLAN SHEET - MNDOT DRIVEWAY AND SIDEWALK DETAILS
	YELLOW BRICK RD.
G001B	TITLE SHEET, LOCATION PLAN, SHEET INDEX
G002B	PLAN LEGEND
G003B	TABUALTIONS, STANDARD PLATES, BASIS OF QUANTITIES
G004B	GENERAL PROJECT NOTES
C001 - C002B	EXISTING CONDITIONS AND REMOVALS
C101B	TYPICAL SECTIONS
C201B	EROSION CONTROL & TURF ESTABLISHMENT
C202B	SWPPP
C401 - C402B	SANITARY SEWER & WATERMAIN IMPROVEMENTS
C501B	STORM SEWER IMPROVEMENTS
C601B	ROADWAY IMPROVEMENTS
T901B	SIGNING & STRIPING PLAN
T902B	TRAFFIC CONTROL PLAN
C801B	SANITARY SEWER DETAILS
C802B	STORM SEWER DETAILS
C803B	ROADWAY & EROSION CONTROL DETAILS
THIS PLAN SET CONTAINS xx SHEETS	

Stantec
733 Marquette Avenue, Suite 1000
Minneapolis, MN 55402
www.stantec.com

I HEREBY CERTIFY THAT THIS PLAN, SPECIFICATION, OR REPORT WAS PREPARED BY ME OR UNDER MY DIRECT SUPERVISION AND THAT I AM A DULY LICENSED PROFESSIONAL ENGINEER UNDER THE LAWS OF THE STATE OF MINNESOTA.

PRINT NAME: ERIC. S. LEMBKE

SIGNATURE:

DATE:

LIC. NO. 49248

PRELIMINARY 10%

CITY OF CHASKA, MINNESOTA
2022 DOWNTOWN RECONSTRUCTION
TITLE SHEET, LOCATION PLAN, SHEET INDEX
GENERAL

NO	REVISION	DATE

SURVEY	PWR
DRAWN	BJ/BF/JP/PJW
DESIGNED	ESL
CHECKED	KPA
APPROVED	ESL
PROJ. NO.	193805454

SHEET NUMBER
G0.01

Date: 2022-03-30 2:35pm
User: bjohnson
File: J:\193805454\Civil\Drawings\Infra01\dwg\924(10)\193805454-G001.dwg
Xrefs: 193805454-BORDER, Margin1, Chaska-5-15-18

THE CONTRACTOR SHALL VERIFY AND BE RESPONSIBLE FOR ALL DIMENSIONS. DO NOT SCALE THE DRAWING - ANY ERRORS OR OMISSIONS SHALL BE REPORTED TO STANTEC WITHOUT DELAY. THE COPYRIGHTS TO ALL DESIGNS AND DRAWINGS ARE THE PROPERTY OF STANTEC. REPRODUCTION OR USE FOR ANY PURPOSE OTHER THAN THAT AUTHORIZED BY STANTEC IS FORBIDDEN.

EXISTING TOPOGRAPHIC SYMBOLS

- STORM SEWER APRON
- BASKETBALL POST
- BARRICADE PERMANENT
- BENCH
- BOOSTER STATION
- BUILDING LOWEST OPENING
- BURIAL CONTROL MONUMENT
- BUSH DECIDUOUS
- CATCH BASIN BEEHIVE
- CURB BOX
- CATCH BASIN
- COLUMN
- CONTROL BOX SIGNAL
- CLEAN OUT (SEWER)
- CULVERT END
- DRINKING FOUNTAIN
- ENERGY DISSIPATER
- FLAG POLE
- FUEL PUMP
- GUY WIRE
- GRILL
- HANDICAP SPACE
- HANDHOLE
- FIRE HYDRANT
- HYDRANT PVMNT MARKER (REFLECTOR)
- HYDRANT VALVE
- INLET (SMALL DIA.)
- LIFT STATION CONTROL PANEL
- LIFT STATION DRY WELL
- LIFT STATION WET WELL
- LIGHT YARD
- LOOP DETECTOR
- MAIL BOX
- MAIL RELAY BOX
- MANHOLE-AIR RELEASE
- MANHOLE-HEAT
- MANHOLE-GAS
- MANHOLE-POWER
- MANHOLE-SANITARY SEWER
- MANHOLE-STORM SEWER
- MANHOLE-COMMUNICATIONS
- MANHOLE-UNKNOWN
- MANHOLE-WATER
- METER POWER
- METER GAS
- ORDINARY HIGH WATER MARK
- OUTLET CONTROL STRUCTURE
- PARKING METER
- PEDESTRIAN PUSH BUTTON
- PEDESTAL POWER
- PEDESTAL CATV
- PEDESTAL COMMUNICATIONS
- POST INDICATOR VALVE
- POLE-COMMUNICATIONS
- POLE-GUY
- POLE-LIGHT
- POLE-POWER
- POLE-UTILITY
- POLE-UTILITY SERVICE
- POST
- PROPANE TANK
- PICNIC TABLE
- SAMPLING WELL
- ROCK
- RR SIGNAL CONTROL BOX
- RR CROSSING GATE
- RR SIGNAL
- REGULATION STATION GAS
- SATELLITE DISH
- SEPTIC TANK
- SEPTIC VENT
- SEPTIC DRAIN FIELD
- SIGN
- SOIL BORING
- STAND PIPE GAS
- SPIGOT WATER
- SPRINKLER HEAD
- SPRINKLER VALVE BOX
- STUMP
- SERVICE-GAS POINT ON LINE
- SERVICE-SANITARY SEWER POINT ON LINE
- SERVICE-STORM SEWER POINT ON LINE
- SERVICE-WATER POINT ON LINE
- TELEPHONE BOOTH
- TRANSMISSION TOWER ELECTRIC
- TEST PIT LOC
- TRACER WIRE BOX
- TRANSFORMER POWER
- TREE DEAD
- TREE-CONIFEROUS
- TREE-DECIDUOUS
- TREE-FRUIT
- TRASH CAN
- TRAFFIC SIGNAL
- VALVE GAS
- VALVE
- VENT GAS
- WATER REDUCER
- WETLAND
- WELL-MONITORING
- WELL-WATER

SURVEY SYMBOLS

- AERIAL CONTROL POINT
- BACKSIGHT CONTROL POINT
- GPS CONTROL POINT
- JUDICIAL LAND MONUMENT
- MONUMENT COMPUTED
- MONUMENT IRON FOUND
- MONUMENT IRON SET
- RESECTED POINT
- ROW MONUMENT
- ROW MARKER POST
- SECTION CORNER
- TRAVERSE CONTROL POINT
- BENCH MARK LOCATION

NEW TOPOGRAPHIC SYMBOLS

- BOLLARD
- SANITARY CLEANOUT
- MANHOLE
- SANITARY OR STORM LIFT STATION
- STORM SEWER BEEHIVE CATCH BASIN
- STORM SEWER CATCH BASIN
- STORM SEWER FLARED END SECTION
- STORM SEWER OUTLET STRUCTURE
- STORM SEWER OVERFLOW STRUCTURE
- CURB BOX
- FIRE HYDRANT
- WATER REDUCER
- VALVE
- RIP RAP
- DRAINAGE FLOW
- PEDESTRIAN RAMP

EXISTING PRIVATE UTILITY LINES

- CTV-D — CABLE TV QUALITY LEVEL D
- CTV-C — CABLE TV QUALITY LEVEL C
- CTV-B — CABLE TV QUALITY LEVEL B
- CTV-A — CABLE TV QUALITY LEVEL A
- FO-D — FIBER OPTIC QUALITY LEVEL D
- FO-C — FIBER OPTIC QUALITY LEVEL C
- FO-B — FIBER OPTIC QUALITY LEVEL B
- FO-A — FIBER OPTIC QUALITY LEVEL A
- E-D — POWER QUALITY LEVEL D
- E-C — POWER QUALITY LEVEL C
- E-B — POWER QUALITY LEVEL B
- E-A — POWER QUALITY LEVEL A
- G-D — GAS QUALITY LEVEL D
- G-C — GAS QUALITY LEVEL C
- G-B — GAS QUALITY LEVEL B
- G-A — GAS QUALITY LEVEL A
- C-D — COMMUNICATION QUALITY LEVEL D
- C-C — COMMUNICATION QUALITY LEVEL C
- C-B — COMMUNICATION QUALITY LEVEL B
- C-A — COMMUNICATION QUALITY LEVEL A
- OHP — OVERHEAD POWER
- OHC — OVERHEAD COMMUNICATION
- OHU — OVERHEAD UTILITIES

EXISTING TOPOGRAPHIC LINES

- RETAINING WALL
- FENCE - BARBED WIRE
- FENCE - CHAIN LINK
- FENCE - DECORATIVE
- FENCE - STOCKADE
- FENCE - WOOD
- FENCE - ELECTRIC
- GUARD RAIL
- TREE LINE
- WETLAND

SURVEY LINES

- BOUNDARY
- NEW CENTERLINE
- EXISTING CENTERLINE
- EXISTING EASEMENT LINE
- NEW EASEMENT LINE
- FLOOD PLAIN BOUNDARY
- EXISTING LOT LINE
- NEW LOT LINE
- EXISTING RIGHT-OF-WAY
- NEW RIGHT-OF-WAY
- SETBACK LINE

EXISTING UTILITY LINES

- FM — FORCE MAIN
- SANITARY SEWER
- SANITARY SERVICE
- STORM SEWER
- WATER MAIN
- WATER SERVICE

NEW UTILITY LINES

- FM — FORCE MAIN
- SANITARY SEWER
- SANITARY SERVICE
- STORM SEWER DRAINTILE
- STORM SEWER
- WATER MAIN
- WATER SERVICE
- PIPE CASING

FUTURE UTILITY LINES

- FM — FORCE MAIN
- SANITARY SEWER
- SANITARY SERVICE
- STORM SEWER DRAINTILE
- STORM SEWER
- WATER MAIN
- WATER SERVICE
- PIPE CASING

CONCRETE CURB AND GUTTER

- EXISTING
- NEW
- FUTURE
- DEMOLITION

GRADING INFORMATION

- 952 — EXISTING CONTOUR MINOR
- 950 — EXISTING CONTOUR MAJOR
- 952 — NEW CONTOUR MINOR
- 950 — NEW CONTOUR MAJOR
- NEW GRADING LIMITS / SLOPE LIMITS
- 744.40 × 745.47 × STA:5+67.19 980.87 — NEW SPOT ELEVATION
- 743.21 × 743.78 — EXISTING SPOT ELEVATION
- 4:1 — RUN:RISE (SLOPE)

ABBREVIATIONS

AD	ALGEBRAIC DIFFERENCE
BV	BUTTERFLY VALVE
BVCE	BEGIN VERTICAL CURVE ELEVATION
BVCS	BEGIN VERTICAL CURVE STATION
℄	CENTER LINE
CL.	CLASS
CMP	CORRUGATED METAL PIPE
C.O.	CHANGE ORDER
DIP	DUCTILE IRON PIPE
EL/ELEV	ELEVATION
EVCE	END VERTICAL CURVE ELEVATION
EVCS	END VERTICAL CURVE STATION
EX	EXISTING
FES	FLARED END SECTION
F/F	FACE TO FACE
FM	FORCE MAIN
F.O.	FIELD ORDER
GV	GATE VALVE
HP	HIGH POINT
HWL	HIGH WATER LEVEL
INV	INVERT
K	CURVE COEFFICIENT
LP	LOW POINT
MH	MANHOLE (SANITARY)
NTS	NOT TO SCALE
NWL	NORMAL WATER LEVEL
PC	POINT OF CURVE
PCC	COMPOUND CURVE
PI	POINT OF INTERSECTION
PL	PROPERTY LINE
PPVC	PERFORATED POLYVINYL CHLORIDE PIPE
PRC	POINT OF REVERSE CURVE
PT	POINT OF TANGENT
PVC	POLYVINYL CHLORIDE PIPE
PVI	POINT OF VERTICAL INTERSECTION
R	RADIUS
RCP	REINFORCED CONCRETE PIPE
R/W	RIGHT-OF-WAY
SS	STORM SEWER STRUCTURE
STA	STATION
TCE	TEMPORARY CONSTRUCTION EASEMENT
TNH	TOP NUT HYDRANT
TYP	TYPICAL
VC	VERTICAL CURVE
WM	WATER MAIN

HATCH PATTERNS

EXISTING	NEW	DEMOLITION	SECTION
CONCRETE	CONCRETE	CONCRETE DWY/WALK	EARTH
ASPHALT ROAD/DWY	ASPHALT ROAD/DWY	ASPHALT ROAD/DWY	ROCK
PAVERS	PAVERS	PAVERS	SAND
			GRAVEL

Stantec
733 Marquette Avenue, Suite 1000
Minneapolis, MN 55402
www.stantec.com

I HEREBY CERTIFY THAT THIS PLAN, SPECIFICATION, OR REPORT WAS PREPARED BY ME OR UNDER MY DIRECT SUPERVISION AND THAT I AM A DULY LICENSED PROFESSIONAL ENGINEER UNDER THE LAWS OF THE STATE OF MINNESOTA.

PRINT NAME: ERIC S. LEMBKE
SIGNATURE:
DATE:
LIC. NO. 49748

PRELIMINARY 10%

CITY OF CHASKA, MINNESOTA
2022 DOWNTOWN RECONSTRUCTION
PLAN LEGEND
GENERAL

NO	REVISION	DATE

SURVEY	PWR
DRAWN	BJ/BF/JP/PJW
DESIGNED	ESL
CHECKED	KPA
APPROVED	ESL
PROJ. NO.	193805454

SHEET NUMBER
G0.02

Date: 2/24/2022 - 5:19pm
Drawing: C:\Users\eric.lembke\AppData\Local\Temp\acpublish_24604\G0.dwg
Xrefs: 193805454-BKDP2DS

THE CONTRACTOR SHALL VERIFY AND BE RESPONSIBLE FOR ALL DIMENSIONS. DO NOT SCALE THE DRAWING. ANY ERRORS OR OMISSIONS SHALL BE REPORTED TO STANTEC WITHOUT DELAY. THE COPYRIGHTS TO ALL DESIGNS AND DRAWINGS ARE THE PROPERTY OF STANTEC. REPRODUCTION OR USE FOR ANY PURPOSE OTHER THAN THAT AUTHORIZED BY STANTEC IS FORBIDDEN.

DRAINAGE TABULATION

STRUCTURE NUMBER	DRAINAGE STRUCTURES TYPE	CATCH BASIN (2'x3')	STORM MANHOLE (48")	STORM MANHOLE (60")	STORM MANHOLE (84")	STORM MANHOLE TREATMENT STRUCTURE (60")	CITY DETAIL	CASTING STYLE NEENAH # OR EQUAL	NOTES
		EACH	EACH	EACH	EACH	EACH			
EXMH-1								R-1642	CONNECT DRAINTILE
511-CBMH	CBMH			1			STO-3	R-3067 V	CONNECT DRAINTILE
512-CB	CB	1					STO-6	R-3067 V	CONNECT DRAINTILE
511A-CBMH	CBMH			1			STO-5	R-3067 V	CONNECT DRAINTILE
502A-CBMH	CBMH			1			STO-3	R-3382	CONNECT DRAINTILE
502-CBMH	CBMH		1				STO-3	R-3067 VB	CONNECT EXISTING
501-CB	CB	1					STO-6	R-3067 VB	CONNECT DRAINTILE
513-CBMH	CBMH		1				STO-5	R-3067 VB	CONNECT DRAINTILE
526-CBMH	CBMH		1				STO-3	R-3067 VB	CONNECT DRAINTILE
526A-CB	CB	1					STO-6	R-3067 VB	CONNECT DRAINTILE
528-CBBH	CBBH		1				STO-9	R-4341-A	BEEHIVE
503-CBMH	CBMH		1				STO-3	R-3067 V	CONNECT DRAINTILE & (2) 4" SUMP LINES
503B-CB	CB	1					STO-6	R-3067 VB	CONNECT DRAINTILE
503A-CBMH	CBMH			1			STO-3	R-3382	CONNECT DRAINTILE
514-CB	CB	1					STO-6	R-3067 VB	CONNECT DRAINTILE
504-CBMH	CBMH			1			STO-3	R-3067 V	CONNECT DRAINTILE
524A-CBMH	CBMH		1				STO-3	R-3067 VB	CONNECT DRAINTILE
524B-CB	CB	1					STO-6	R-3067 VB	CONNECT DRAINTILE
524-CBMH	CBMH		1				STO-3	R-3067 V	CONNECT DRAINTILE
529-CB	CB	1					STO-6	R-3067 VB	CONNECT DRAINTILE
505-CBMH	CBMH				1		STO-3	R-3067 V	CONNECT DRAINTILE
506-CBMH	CBMH		1				STO-3	R-3067 V	CONNECT DRAINTILE
516-CB	CB	1					STO-6	R-3067 V	CONNECT DRAINTILE
507-CBMH	CBMH		1				STO-3	R-3382	CONNECT DRAINTILE
~~500-CB~~	~~CB~~	~~1~~					~~STO-5~~	~~R-3067 V~~	~~CONNECT DRAINTILE~~
~~510-CB~~	~~CB~~	~~1~~					~~STO-6~~	~~R-3067 V~~	~~CONNECT DRAINTILE~~
508-CBMH	CBMH	1					STO-3	R-3382	CONNECT DRAINTILE
~~500A-CB~~	~~CB~~		~~1~~				~~STO-6~~	~~R-3067 V~~	~~CONNECT DRAINTILE AND 4" & 6" SUMP LINES~~
527-CB	CB	1					STO-6	R-3067 V	CONNECT DRAINTILE
519-CBMH	CBMH			1			STO-5	R-3067 V	CONNECT DRAINTILE
518-CBMH	CBMH			1			STO-3	R-3382	CONNECT DRAINTILE
523-CBMH	CBMH		1				STO-5	R-3382	CONNECT DRAINTILE
522-CB	CB	1					STO-6	R-3067 VB	CONNECT DRAINTILE AND 6" SUMP LINE
525-CB	CB	1					STO-6	R-3067 VB	CONNECT DRAINTILE
530-CBMH	CBMH			1			STO-3	R-3067 V	CONNECT DRAINTILE AND 15" STUB
517-CBMH	CBMH			1			STO-3	R-3382	CONNECT DRAINTILE
520A-CBMH	CBMH		1				STO-5	R-3382	CONNECT DRAINTILE
520-CBMH	CBMH		1				STO-3	R-3067 VB	CONNECT DRAINTILE & (2) 4" SUMP LINES
518A-CB	CB	1					STO-6	R-3067 V	CONNECT DRAINTILE
TOTAL		15	13	9	1	0			

F & I SIGN PANELS TYPE C

SIGN NO.	DESCRIPTION	WIDTH	HEIGHT	QTY	Total SF	Notes
R1-1	STOP SIGN	30	30	3	18.75	
R7-1	NO PARKING	12	18	2	3	
	TOTAL				**21.75**	

THE FOLLOWING STANDARD PLATES AS APPROVED BY THE FHWA SHALL APPLY ON THIS PROJECT

STANDARD PLATES

ITEM NUMBER	ITEM
3000M	REINFORCED CONCRETE PIPE (6 SHEETS)
3006H	GASKET JOINT FOR RC PIPE (2 SHEETS)
3145E	CONCRETE PIPE TIES
4011E	PRECAST CONCRETE BASE
7038A	DETECTABLE WARNING SURFACE TRUNCATED DOMES
8000J	CHANNELIZERS

BASIS OF QUANTITIES

MASS OF BITUMINOUS MATERIAL	110 lb / SY / inch depth
MASS OF AGGREGATE BASE	135 lb / ft^3
BITUMINOUS MATERIAL FOR TACK COAT	0.05 gal/yd^2
SEED MIX 21-151	180 lb/acre
FERTILIZER 24-12-24	400 lb/acre
MULCH TYPE 1	2 ton/acre

Stantec
733 Marquette Avenue, Suite 1000
Minneapolis, MN 55402
www.stantec.com

I HEREBY CERTIFY THAT THIS PLAN, SPECIFICATION, OR REPORT WAS PREPARED BY ME OR UNDER MY DIRECT SUPERVISION AND THAT I AM A DULY LICENSED PROFESSIONAL ENGINEER UNDER THE LAWS OF THE STATE OF MINNESOTA.

PRINT NAME: ERIC. S. LEMBKE

SIGNATURE:

DATE:

LIC. NO. 42748

PRELIMINARY 10%

CITY OF CHASKA, MINNESOTA
2022 DOWNTOWN RECONSTRUCTION
TABULATIION, STANDARD PLATES, & BASIS OF QUANTITIES
GENERAL

NO	REVISION	DATE

SURVEY	PWR
DRAWN	BJ/BF/JP/PJW
DESIGNED	ESL
CHECKED	KPA
APPROVED	ESL
PROJ. NO.	193805454

SHEET NUMBER
G0.03

Date: 2022/7/27/2022 - 8:57pm
Drawing: C:\Users\eric.lembke@stantec.com\AppData\Local\Temp\acpublish_18104\Chaska_DR_Infiltro01\cms9261\O\193805454-G003.dwg
Layout: G0.03
Xref(s): 193805454-B-DR0-EE

THE CONTRACTOR SHALL VERIFY AND BE RESPONSIBLE FOR ALL DIMENSIONS. DO NOT SCALE THE DRAWING - ANY ERRORS OR OMISSIONS SHALL BE REPORTED TO STANTEC WITHOUT DELAY. THE COPYRIGHTS TO ALL DESIGNS AND DRAWINGS ARE THE PROPERTY OF STANTEC. REPRODUCTION OR USE FOR ANY PURPOSE OTHER THAN THAT AUTHORIZED BY STANTEC IS FORBIDDEN.

EXISTING CONDITIONS & REMOVALS:

EXISTING TREES TO REMAIN

REMOVE TREE (CLEAR AND GRUB)

POSSIBLE REMOVAL - TO BE REVIEWED IN FIELD WITH ENGINEER.

REMOVE STOP SIGN

REMOVE CONCRETE CURB

REMOVE BITUMINOUS SURFACE

SAW CUT

REMOVE SIDEWALK

REMOVE BITUMINOUS DRIVEWAY

REMOVE CONCRETE DRIVEWAY

REMOVE WATER MAIN, VALVE AND SERVICE LINE

REMOVE SANITARY SEWER AND SERVICE LINE

REMOVE STORM SEWER PIPE AND STRUCTURE

CONCRETE CURB AND GUTTER
B612 MODIFIED PARKBOARD
SEE DETAIL STR-1B ON SHEET C8.04

CONCRETE ALLEY APRON
14 FOOT WIDTH STANDARD
SEE DETAIL STR-2 ON SHEET C8.04

CONCRETE SIDEWALK
SEE TYPICAL SECTION ON SHEET C1.01

CONCRETE CARRIAGE WALK
WIDTH TO MATCH EXISTING

CONCRETE DRIVEWAY APRON
WIDTH TO MACH EXISTING
SEE DETAIL STR-2 ON SHEET C8.04

TEMPORARY BITUMINOUS S/W
WIDTH TO MATCH EXISTING

PEDESTRIAN CURB RAMP
SEE DETAIL STR-11 SHEET C8.04

BITUMINOUS STREET PAVEMENT

REMOVAL NOTES:

- SAWCUT BITUMINOUS AND CONCRETE CURB AND STREET AND DRIVEWAY CONSTRUCTION LIMITS.
- TREE REMOVALS SHOWN ON PLAN ARE APPROXIMATE. TREES THAT ARE TO BE REMOVED WILL BE MARKED BY ENGINEER IN THE FIELD.
- PAYMENT SHALL BE MADE BY THE BID UNIT PRICE FOR EACH TREE REMOVED ON THE PROJECT. NO ADDITIONAL COMPENSATION WILL BE MADE FOR TREES NOT SHOWN ON THE DRAWINGS REGARDLESS OF SIZE AND LOCATION.
- PRUNE ALL TREE ROOTS EXPOSED TO OR DAMAGED BY CONSTRUCTION.
- DRIVEWAY REMOVAL LIMITS AREA APPROXIMATE. ACTUAL DRIVEWAY REMOVAL LIMITS WILL VARY BASED ON FIELD CONDITIONS AND STREET GRADES.
- CONTRACTOR MAY REMOVE BITUMINOUS PAVEMENT THROUGH MILLING OR RECLAMATION. THE MATERIAL IS TO BE USED FOR ACCESS ON SITE DURING CONSTRUCTION. IT IS NOT ANTICIPATED THAT ANY MATERIAL WILL BE USED IN THE PROPOSED STREET SECTION.
- DURING THE REMOVAL PROCESS THE CONTRACTOR MAY COME ACROSS EXISTING SUMP LINES THAT DISCHARGE INTO THE BOULEVARD OR STREET. THE CONTRACTOR WILL MARK THOSE LOCATIONS AND ENSURE ALL FUNCTIONING SUMP LINES CONTINUE TO HAVE AN UNINTERRUPTED DISCHARGE POINT.
- WATER MAIN ABANDONMENT SHALL BE DETERMINED IN THE FIELD BY OWNER/ ENGINEER

SANITARY SEWER NOTES:

- ALL PVC PIPE SHALL BE SDR 26 UNLESS OTHERWISE NOTED.
- STATIONING IN PROFILE REFLECTS PIPE STATIONING.
- RISER HEIGHT NOTED ON THE DRAWINGS IS AN APPROXIMATION. CONTRACTOR TO VERIFY AND DOCUMENT FINAL RISER HEIGHT. MAINTAIN A SLOPE OF NO LESS THAN 2% ON SERVICE FROM CONNECTION POINT TO THE MAIN/RISER.

STORM SEWER NOTES:

- ALL RCP STORM SEWER IS CLASS 5 UNLESS OTHERWISE NOTED
- SEE EXISTING CONDITIONS/REMOVALS SHEETS FOR PRIVATE UTILITY LOCATIONS.

WATER MAIN NOTES:

- ALL PVC PIPE SHALL BE C-900 DR 18 UNLESS OTHERWISE NOTED.
- WATER MAIN SHALL HAVE 7.5' MINIMUM COVER. WATER MAIN OVER DEPTH IS INCIDENTAL.
- HYDRANT ELEVATIONS ARE TO TOP NUT.

SEWER AND WATER SERVICE NOTES:

- INSTALL NEW SEWER SERVICES UP TO R/W UNLESS OTHERWISE DEFINED BY THE ENGINEER.
- ALL SANITARY SEWER SERVICES SHALL BE 4" PVC - SCH-40 UNLESS EXISTING SERVICE IS LARGER. MATCH SIZE OF EXISTING SERVICE PIPE
- CONTRACTOR TO VERIFY SEWER SERVICE RISERS HEIGHTS PRIOR TO INSULATION.
- ALL RESIDENTS WILL BE GIVEN THE OPPORTUNITY, IF ACCESSIBLE, TO REPLACE THEIR SEWER SERVICE BETWEEN PROPERTY LINE AND HOUSE. THE ENGINEER WILL NOTIFY THE CONTRACTOR OF THESE RESIDENCES DURING SANITARY SEWER INSTALLATION.
- INSTALL TRACER WIRE WITH ALL SANITARY SEWER AND WATER SERVICE LINES PER DETAIL SER-1 AND SER-2A.
- WHEN FERNCO CONNECTION IS USED THE CONNECTION MUST BE FULLY ENCASED IN CONCRETE.
- ALL WATER SERVICES SHALL BE 1" SIDR 7 IPS PE UNLESS OTHERWISE NOTED.
- INSTALL WATER SERVICES PER DETAIL SER-2A.
- FOLLOWING WATER SERVICE CONNECTION THERE WILL BE A VISUAL INSPECTION WITH WATER TURNED OFF AT THE HOUSE SIDE OF CURB STOP.
- INSULATE WATER SERVICES WITHIN 2' OF STORM SEWER PIPING.

TEMPORARY UTILITY NOTES:

- CONTRACTOR TO INSTALL AND MAINTAIN TEMPORARY WATER MAIN AND SANITARY SEWER SERVICE CONNECTIONS (GRAVITY OR BYPASS PUMPING) PER SPECIFICATIONS.

SUBSURFACE UTILITY INFORMATION:

THE SUBSURFACE UTILITY INFORMATION ON THIS PLAN IS SHOWN TO UTILITY QUALITY LEVEL IN ACCORDANCE WITH LEGEND PROVIDED BELOW. THIS QUALITY LEVEL WAS DETERMINED ACCORDING TO THE GUIDELINES OF CI/ASCE 38-02, ENTITLED STANDARD GUIDELINES FOR THE COLLECTION AND DEPICTION OF EXISTING SUBSURFACE UTILITY DATA. UTILITY DESIGNATIONS ARE SHOWN ON DRAWING G0.02.

UTILITY QUALITY LEVELS:
LEVEL D - INFORMATION COMES SOLELY FROM EXISTING UTILITY RECORDS.

LEVEL C - SURVEYING ABOVE GROUND UTILITY FACILITIES, SUCH AS MANHOLES, VALVE BOXES, ETC; AND CORRELATING THIS INFORMATION WITH EXISTING UTILITY RECORDS.

LEVEL B - THE USE OF SURFACE GEOPHYSICAL TECHNIQUES TO DETERMINE THE EXISTENCE AND HORIZONTAL POSITION OF UNDERGROUND UTILITIES.

LEVEL A - THE USE OF NONDESTRUCTIVE DIGGING EQUIPMENT AT HORIZONTAL AND VERTICAL POSITION OF UNDERGROUND UTILITIES, AS WELL AS THE TYPE, SIZE, CONDITION, MATERIAL AND OTHER CHARACTERISTICS.

PRIVATE UTILITIES ARE SHOWN IN THE LOCATIONS PROVIDED BY THE OWNER PRIOR TO CONSTRUCTION.

SUMP LINE INFORMATION

- INSTALL 6" PVC (SDR 26) LINE 1.5' BEHIND CURB. INSTALL AT SAME GRADE AS STREET. PIPE SHOULD ENTER STRUCTURE 3' BELOW FINISH GRADE, BUT NEVER BELOW THE SPRINGLINE OF THE OUTLET PIPE IN THE STRUCTURE.
- WHERE HOMES HAVE NO EXISTING SUMP LINE TO CONNECT TO, INSTALL ONE 4" PVC (SDR 26) PIPE RUN TO THE ROW LINE. AT ROW LINE, THE 4" INVERT SHOULD BE 18" TO 24" BELOW FINISH GRADE. GLUE ON PVC CAP AND PLACE A 12" TO 18" PIECE OF REBAR FOR LOCATING.
- AT EACH HOME WITH AN EXISTING SUMP LINE TO CONNECT TO OR A SUMP LINE THAT WILL BE CONNECTED IN THE NEAR FUTURE, A SUMP DRAIN BOX WILL BE INSTALLED ON THE ROW LINE WITH AN INVERT OF PIPE TO FINISH GRADE DEPTH OF 18" TO 24".
- IF ACCESSIBLE, CONTRACTOR WILL CONNECT THE EXISTING SUMP LINE TO THE NEW DRAIN BOX (CONNECTION INCIDENTAL).
- INSTALL 6" PVC CLEAN OUT AT THE END OF EACH 6" SUMP LINE WITH METAL SCREW ON CAP FOR LOCATING.
- REVIEW HOUSES THAT WILL RECEIVE A DRAINAGE BOX WITH THE OWNER AND ENGINEER.
- DRILL HOLES IN THE BOTTOM OF ALL DRAINAGE BOXES AND BED UNDERSIDE OF BOX WITH A MINIMUM OF 6" COARSE FILTER AGGREGATE.

PROJECT GENERAL NOTES:

1. PROPOSED STRUCTURES REFERENCE PROPOSED STREET CENTERLINE STATIONING.

Stantec
733 Marquette Avenue, Suite 1000
Minneapolis, MN 55402
www.stantec.com

I HEREBY CERTIFY THAT THIS PLAN, SPECIFICATION, OR REPORT WAS PREPARED BY ME OR UNDER MY DIRECT SUPERVISION AND THAT I AM A DULY LICENSED PROFESSIONAL ENGINEER UNDER THE LAWS OF THE STATE OF MINNESOTA.

PRINT NAME: ERIC S. LEMBKE

SIGNATURE: _____ LIC. NO. 42748

DATE: _____

PRELIMINARY 10%

CITY OF CHASKA, MINNESOTA
2022 DOWNTOWN RECONSTRUCTION
GENERAL PROJECT NOTES
GENERAL

NO	REVISION	DATE

SURVEY	PWR
DRAWN	BJ/BF/JP/PJW
DESIGNED	ESL
CHECKED	KPA
APPROVED	ESL
PROJ. NO.	193805454

SHEET NUMBER
G0.04

Date: 10/27/2022 - 8:57pm
Drawing: P:\193805454\CAD\PLAN\Sheets\Dwg\G0.04_Info01\.dm9261\0\193805454-G003.dwg
Layout: G0.04 User: ESL
Xrefs: 193805454-CXRDFB

THE CONTRACTOR SHALL VERIFY AND BE RESPONSIBLE FOR ALL DIMENSIONS. DO NOT SCALE THE DRAWING. ALL DESIGNS, DRAWINGS AND SPECIFICATIONS ARE THE PROPERTY OF STANTEC. REPRODUCTION OR USE FOR ANY PURPOSE OTHER THAN THAT AUTHORIZED BY STANTEC IS FORBIDDEN.

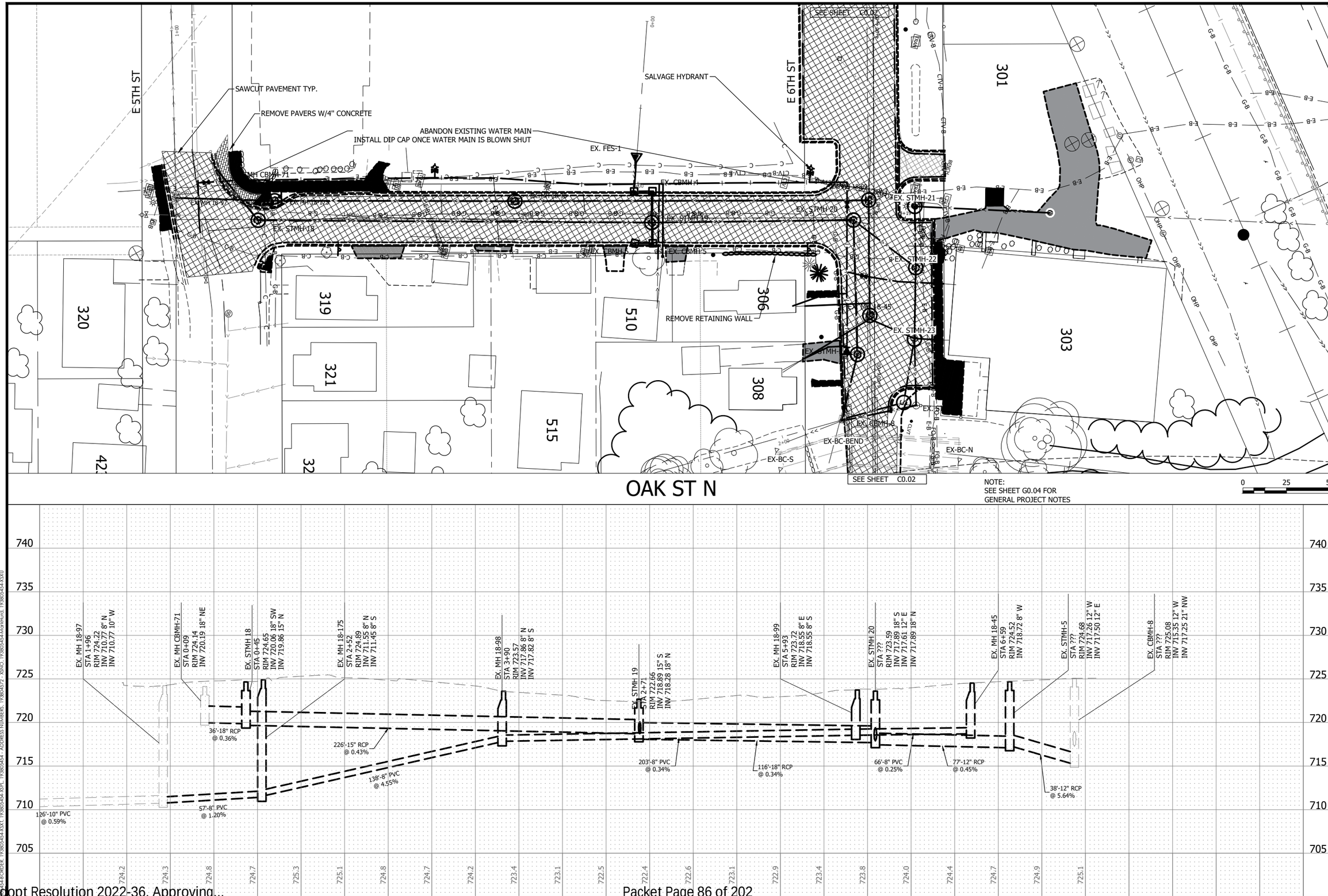

NOTE:
SEE SHEET G0.04 FOR
GENERAL PROJECT NOTES

Stantec
733 Marquette Avenue, Suite 1000
Minneapolis, MN 55402
www.stantec.com

I HEREBY CERTIFY THAT THIS PLAN, SPECIFICATION, OR REPORT WAS PREPARED BY ME OR UNDER MY DIRECT SUPERVISION AND THAT I AM A DULY LICENSED PROFESSIONAL ENGINEER UNDER THE LAWS OF THE STATE OF MINNESOTA.

PRINT NAME: ERIC. S. LEMBKE
LIC. NO. 42748
SIGNATURE:
DATE:

PRELIMINARY 10%

CITY OF CHASKA, MINNESOTA
2022 DOWNTOWN RECONSTRUCTION
EXISTING CONDITIONS AND REMOVALS
OAK ST N

NO	REVISION	DATE

SURVEY	PWR
DRAWN	BJ/BF/JP/PJW
DESIGNED	ESL
CHECKED	KPA
APPROVED	ESL
PROJ. NO.	193805454

SHEET NUMBER
C0.01

THE CONTRACTOR SHALL VERIFY AND BE RESPONSIBLE FOR ALL DIMENSIONS. DO NOT SCALE THE DRAWING - ANY ERRORS OR OMISSIONS SHALL BE REPORTED TO STANTEC WITHOUT DELAY. THE COPYRIGHTS TO ALL DESIGNS AND DRAWINGS ARE THE PROPERTY OF STANTEC. REPRODUCTION OR USE FOR ANY PURPOSE OTHER THAN THAT AUTHORIZED BY STANTEC IS FORBIDDEN.

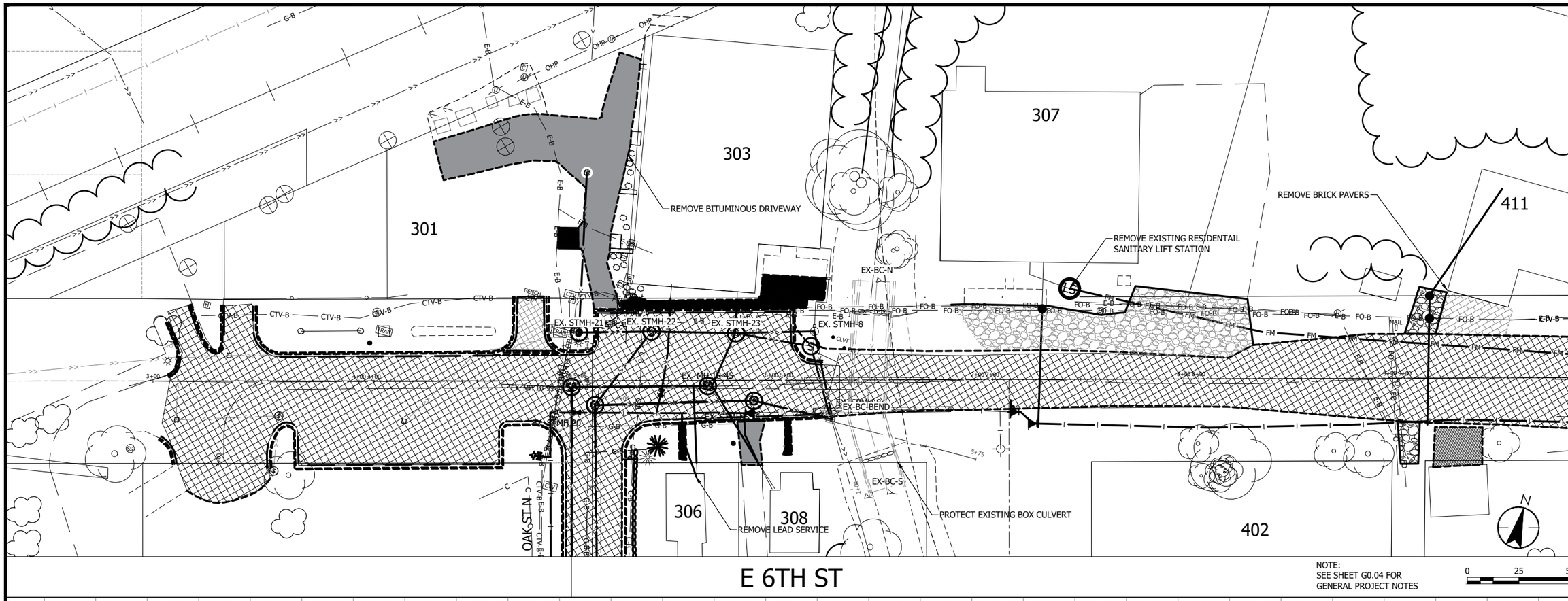

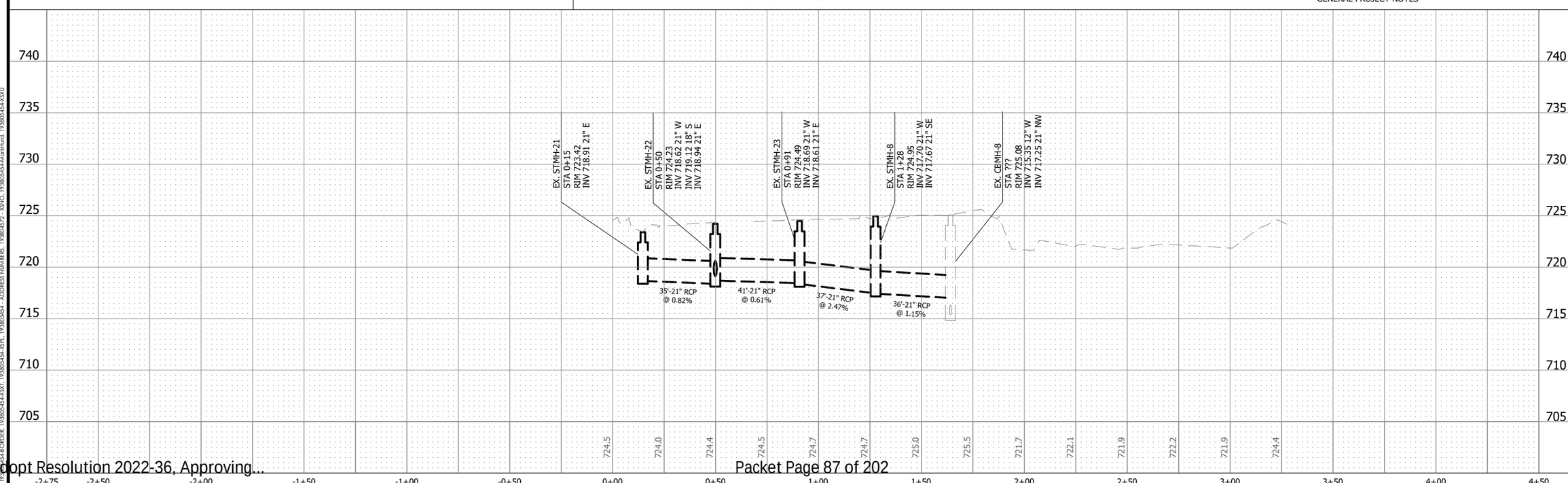

Stantec
733 Marquette Avenue, Suite 1000
Minneapolis, MN 55402
www.stantec.com

I HEREBY CERTIFY THAT THIS PLAN, SPECIFICATION, OR REPORT WAS PREPARED BY ME OR UNDER MY DIRECT SUPERVISION AND THAT I AM A DULY LICENSED PROFESSIONAL ENGINEER UNDER THE LAWS OF THE STATE OF MINNESOTA.

PRINT NAME: ERIC. S. LEMBKE

SIGNATURE:

DATE:

LIC. NO. 42748

PRELIMINARY 10%

CITY OF CHASKA, MINNESOTA

2022 DOWNTOWN RECONSTRUCTION

EXISTING CONDITIONS AND REMOVALS

E 6TH ST

NO	REVISION	DATE

SURVEY	PWR
DRAWN	BJ/BF/JP/PJW
DESIGNED	ESL
CHECKED	KPA
APPROVED	ESL
PROJ. NO.	193805454

SHEET NUMBER
C0.02

THE CONTRACTOR SHALL VERIFY AND BE RESPONSIBLE FOR ALL DIMENSIONS. DO NOT SCALE THE DRAWING. ALL DESIGNS, DRAWINGS AND SPECIFICATIONS ARE THE PROPERTY OF STANTEC. REPRODUCTION OR USE FOR ANY PURPOSE OTHER THAN THAT AUTHORIZED BY STANTEC IS FORBIDDEN.

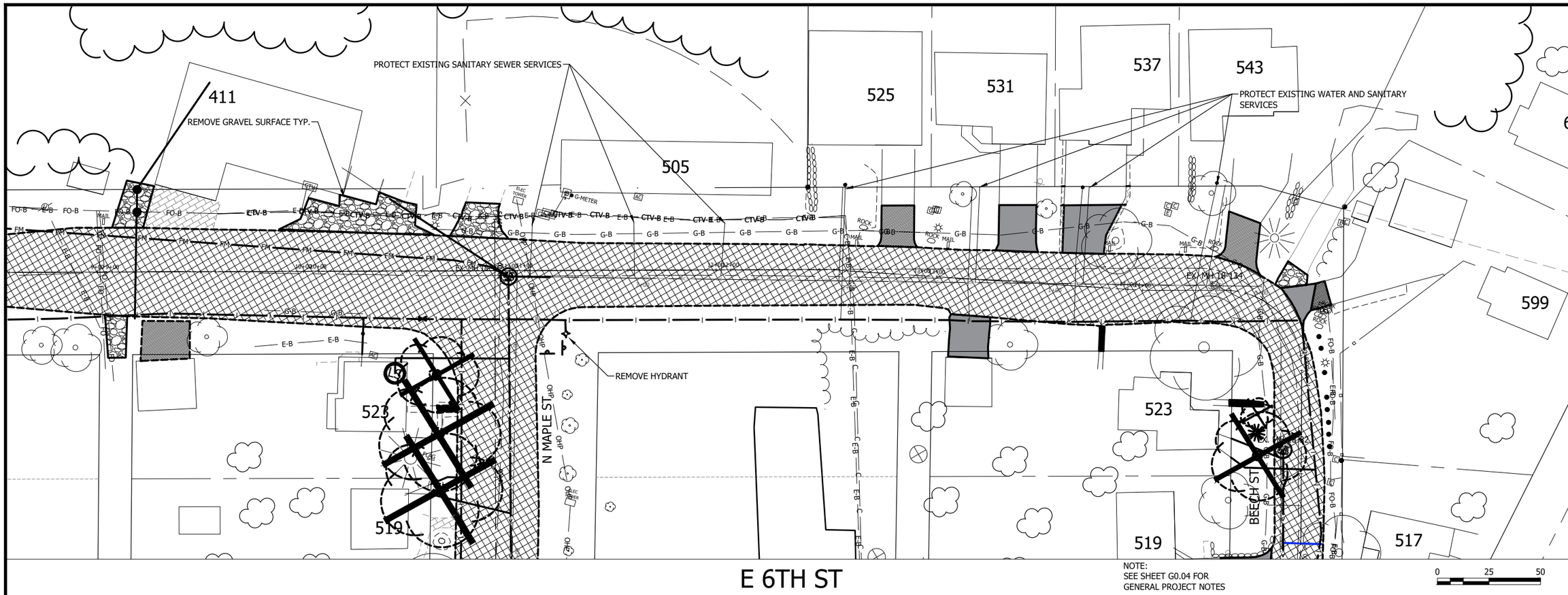

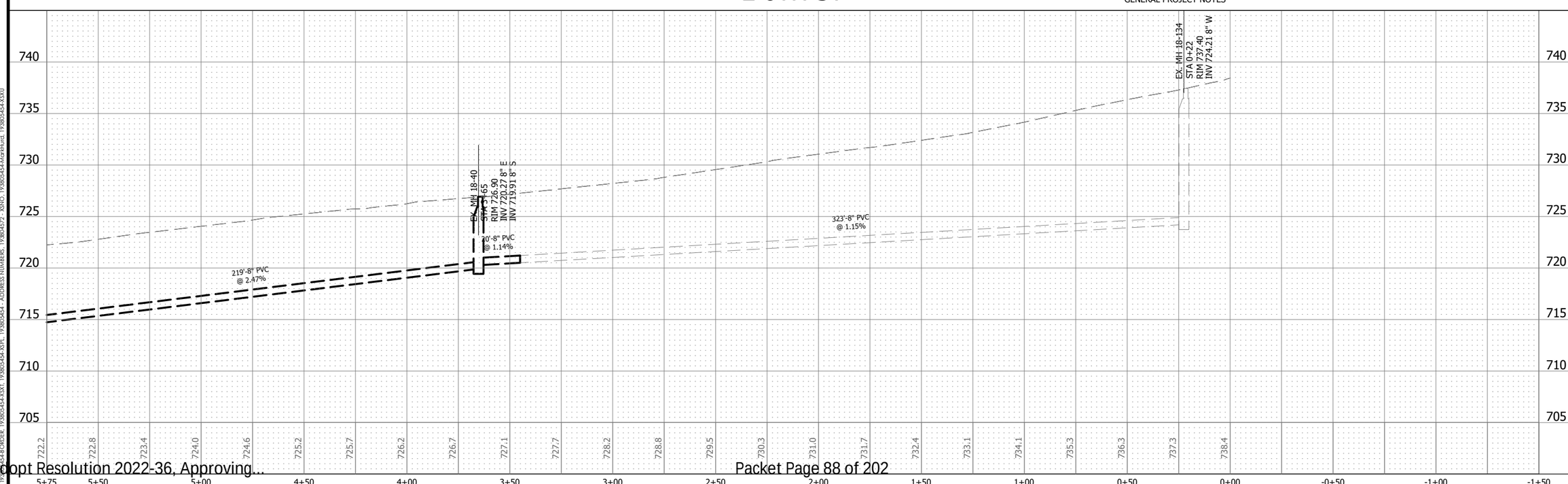

Stantec
733 Marquette Avenue, Suite 1000
Minneapolis, MN 55402
www.stantec.com

I HEREBY CERTIFY THAT THIS PLAN, SPECIFICATION, OR REPORT WAS PREPARED BY ME OR UNDER MY DIRECT SUPERVISION AND THAT I AM A DULY LICENSED PROFESSIONAL ENGINEER UNDER THE LAWS OF THE STATE OF MINNESOTA.

PRINT NAME: ERIC S. LEMBKE

SIGNATURE:

DATE:

LIC. NO. 42748

PRELIMINARY 10%

CITY OF CHASKA, MINNESOTA

2022 DOWNTOWN RECONSTRUCTION

EXISTING CONDITIONS AND REMOVALS

E 6TH ST

NO	REVISION	DATE

SURVEY	PWR
DRAWN	BJ/BF/JP/PJW
DESIGNED	ESL
CHECKED	KPA
APPROVED	ESL
PROJ. NO.	193805454

SHEET NUMBER

C0.03

THE CONTRACTOR SHALL VERIFY AND BE RESPONSIBLE FOR ALL DIMENSIONS. DO NOT SCALE THE DRAWING. ALL DESIGNS, DRAWINGS AND SPECIFICATIONS ARE THE PROPERTY OF STANTEC. REPRODUCTION OF ANY DESIGNS AND DRAWINGS ARE THE PROPERTY OF STANTEC. REPRODUCTION OR USE FOR ANY PURPOSE OTHER THAN THAT AUTHORIZED BY STANTEC IS FORBIDDEN.

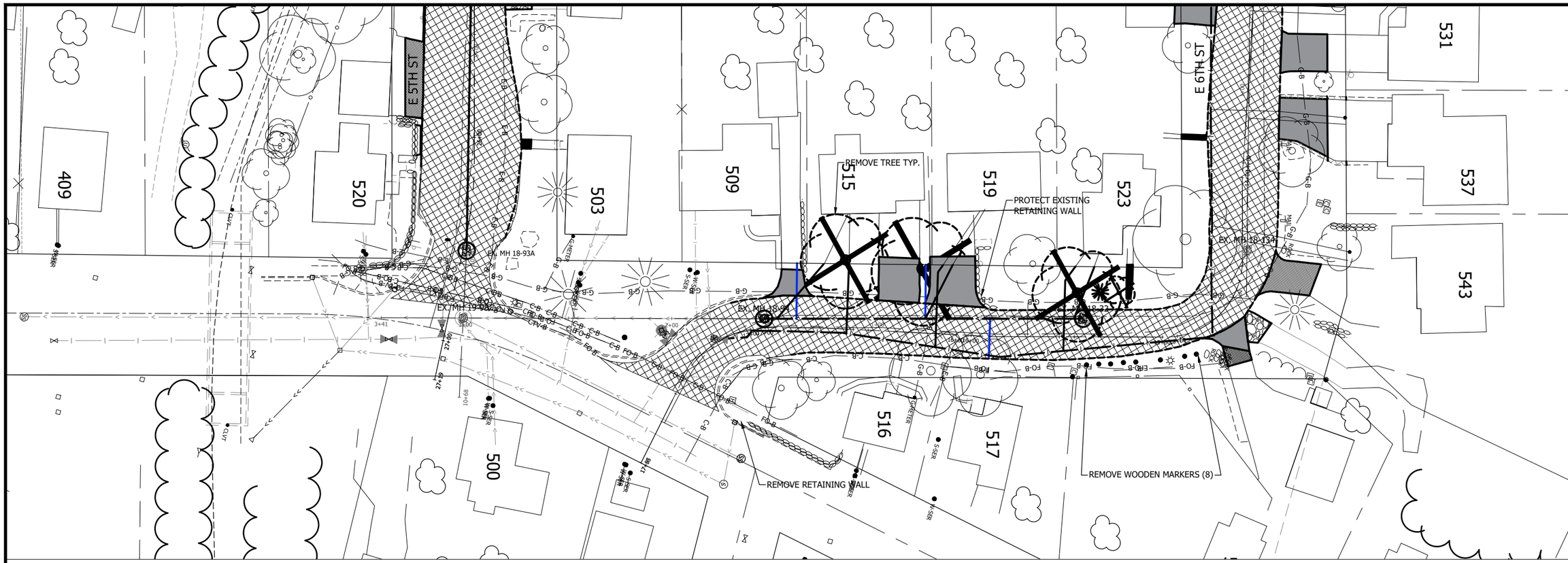

BEECH ST

NOTE:
SEE SHEET G0.04 FOR
GENERAL PROJECT NOTES

0 25 50

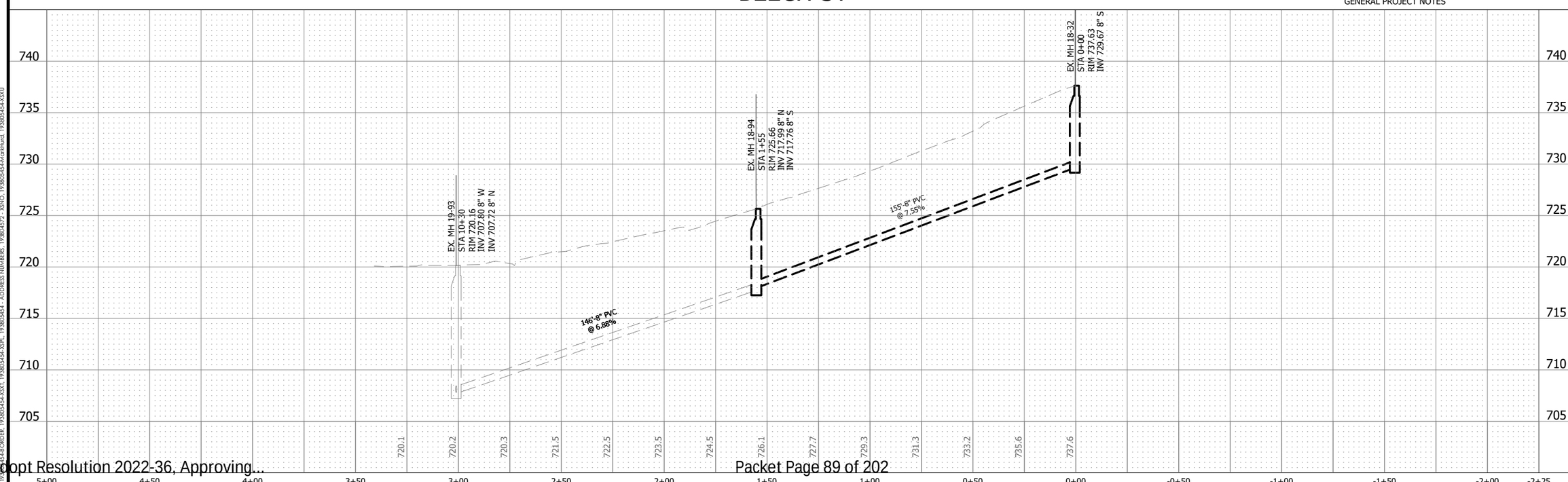

Stantec
733 Marquette Avenue, Suite 1000
Minneapolis, MN 55402
www.stantec.com

I HEREBY CERTIFY THAT THIS PLAN, SPECIFICATION, OR REPORT WAS PREPARED BY ME OR UNDER MY DIRECT SUPERVISION AND THAT I AM A DULY LICENSED PROFESSIONAL ENGINEER UNDER THE LAWS OF THE STATE OF MINNESOTA.

PRINT NAME: ERIC. S. LEMBKE

SIGNATURE:

DATE:

LIC. NO. 42748

PRELIMINARY 10%

CITY OF CHASKA, MINNESOTA

2022 DOWNTOWN RECONSTRUCTION

EXISTING CONDITIONS AND REMOVALS

BEECH ST

NO	REVISION	DATE

SURVEY	PWR
DRAWN	BJ/BF/JP/PJW
DESIGNED	ESL
CHECKED	KPA
APPROVED	ESL
PROJ. NO.	193805454

SHEET NUMBER
C0.04

Date: 2/30/2022 - 2:25pm
Login: pwr-mn-jpw1
Xrefs: 19-93-54-B-ORDER; 193805454-XSXT; 193805454-XSFL; 193805454 - ADDRESS NUMBERS; 193804572 - XSNO; 193805454-Mordrkhurd; 193805454-XSXU

THE CONTRACTOR SHALL VERIFY AND BE RESPONSIBLE FOR ALL DIMENSIONS. DO NOT SCALE THE DRAWING. REPORT ANY ERRORS, OMISSIONS OR INCONSISTENCIES TO STANTEC IMMEDIATELY. THE COPYRIGHTS TO ALL DESIGNS AND DRAWINGS ARE THE PROPERTY OF STANTEC. REPRODUCTION OR USE FOR ANY PURPOSE OTHER THAN THAT AUTHORIZED BY STANTEC IS FORBIDDEN.

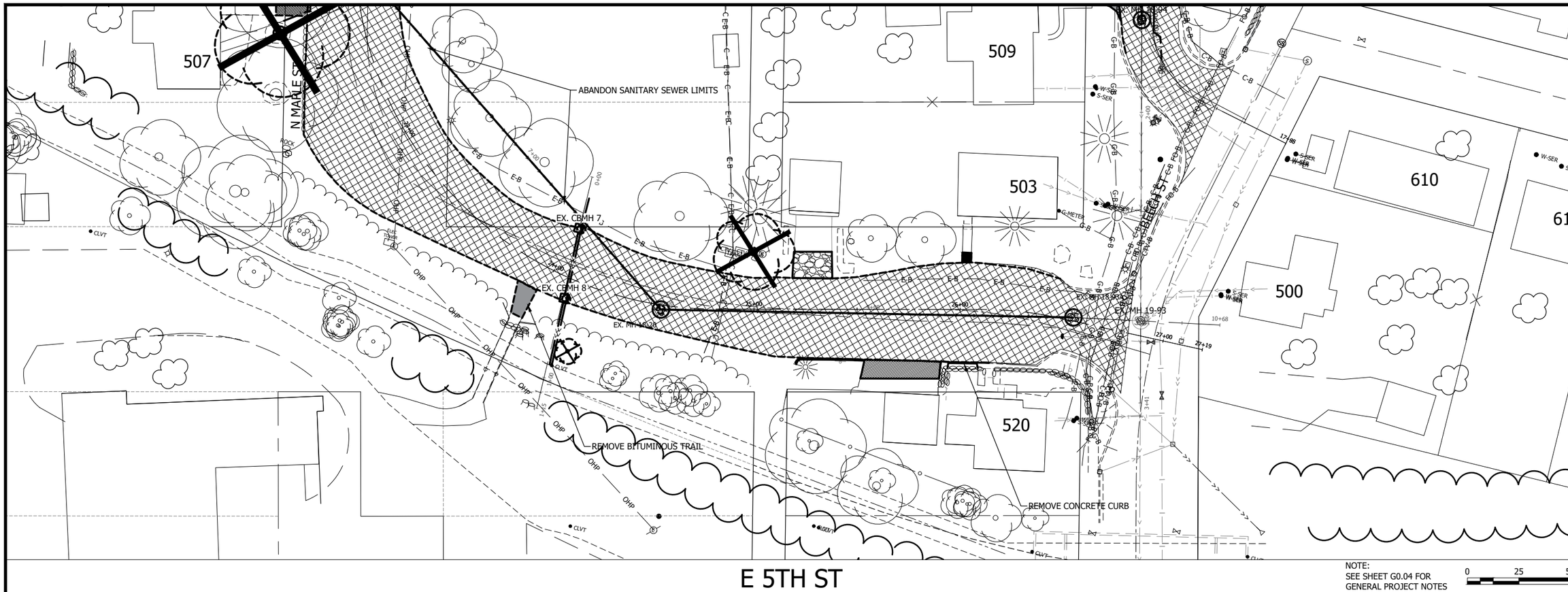

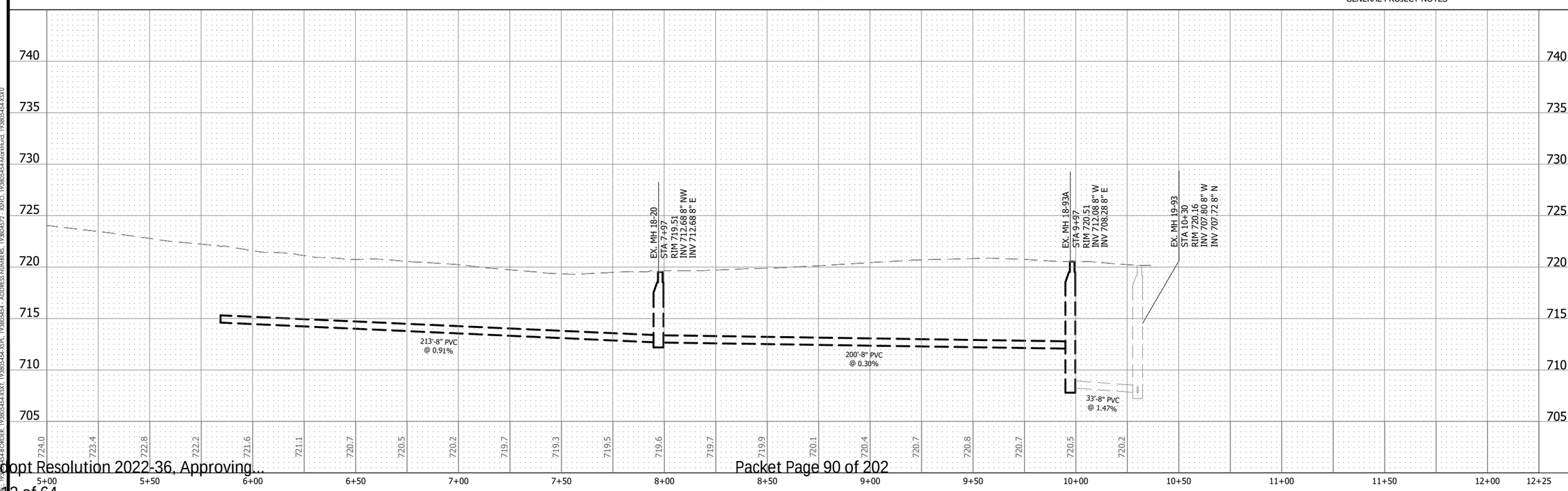

Stantec
733 Marquette Avenue, Suite 1000
Minneapolis, MN 55402
www.stantec.com

I HEREBY CERTIFY THAT THIS PLAN, SPECIFICATION, OR REPORT WAS PREPARED BY ME OR UNDER MY DIRECT SUPERVISION AND THAT I AM A DULY LICENSED PROFESSIONAL ENGINEER UNDER THE LAWS OF THE STATE OF MINNESOTA.

PRINT NAME: ERIC. S. LEMBKE
SIGNATURE:
DATE:
LIC. NO. 42748

PRELIMINARY 10%

CITY OF CHASKA, MINNESOTA

2022 DOWNTOWN RECONSTRUCTION

EXISTING CONDITIONS AND REMOVALS

N MAPLE ST

NO	REVISION	DATE

SURVEY	PWR
DRAWN	BJ/BF/JP/PJW
DESIGNED	ESL
CHECKED	KPA
APPROVED	ESL
PROJ. NO.	193805454

SHEET NUMBER
C0.05

Date: 2/30/2022 - 2:25pm
User: eric.lembke@stantec.com
Path: J:\193805454\Project Files\01-Design\Drawings\193805454-C001.dwg
Xrefs: 193805454-B-BORDER, 193805454-XSXT, 193805454-XSFL, 193805454 - ADDRESS NUMBERS, 193804572 - XSNO, 193805454-Mordrkhurd, 193805454-XSXU

THE CONTRACTOR SHALL VERIFY AND BE RESPONSIBLE FOR ALL DIMENSIONS. DO NOT SCALE THE DRAWING - ANY ERRORS OR OMISSIONS SHALL BE REPORTED TO STANTEC WITHOUT DELAY. THE COPYRIGHTS TO ALL DESIGNS AND DRAWINGS ARE THE PROPERTY OF STANTEC. REPRODUCTION OR USE FOR ANY PURPOSE OTHER THAN THAT AUTHORIZED BY STANTEC IS FORBIDDEN.

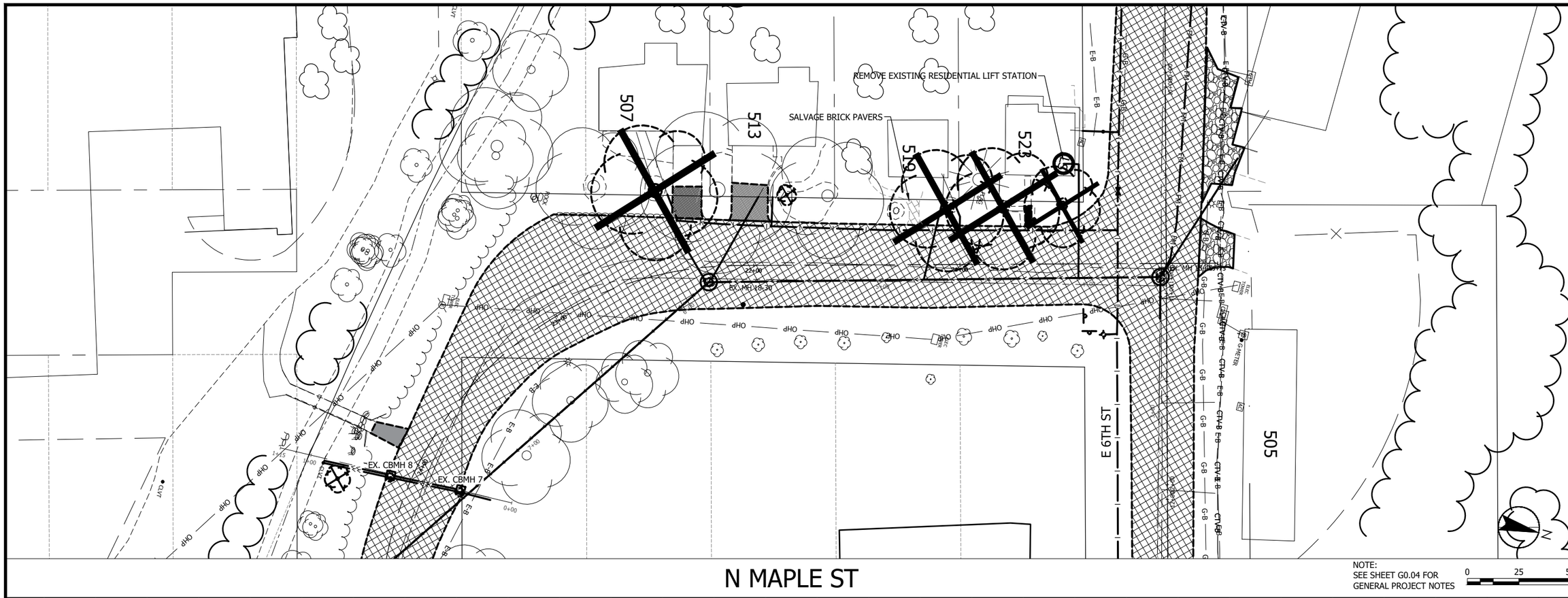

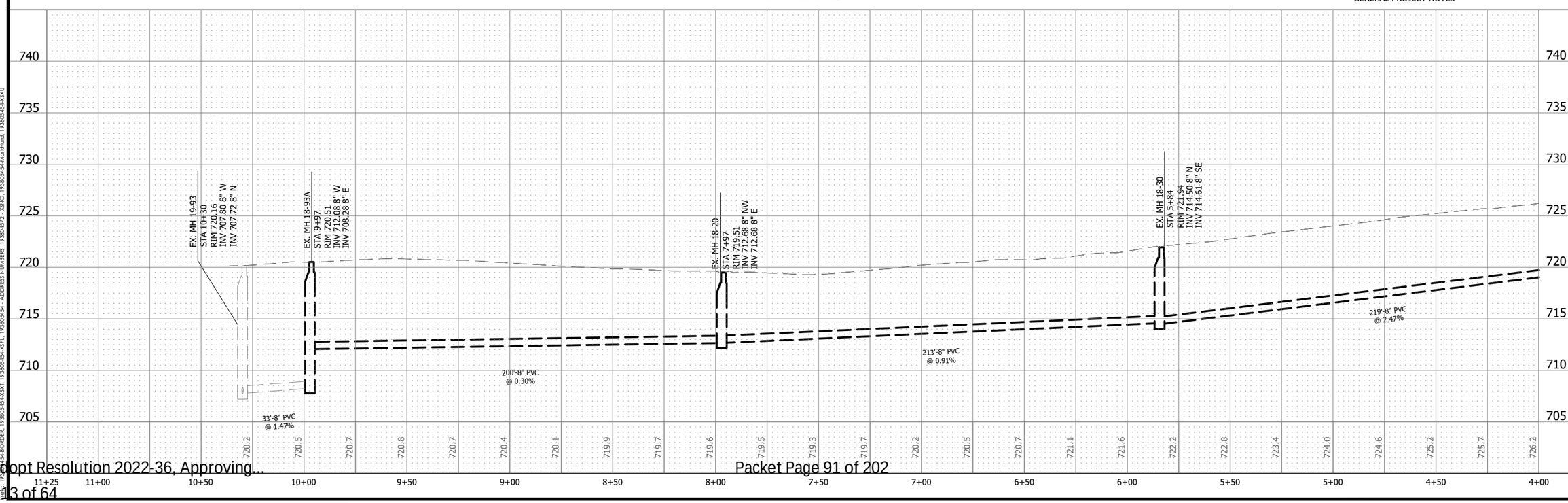

Stantec
733 Marquette Avenue, Suite 1000
Minneapolis, MN 55402
www.stantec.com

I HEREBY CERTIFY THAT THIS PLAN, SPECIFICATION, OR REPORT WAS PREPARED BY ME OR UNDER MY DIRECT SUPERVISION AND THAT I AM A DULY LICENSED PROFESSIONAL ENGINEER UNDER THE LAWS OF THE STATE OF MINNESOTA.

PRINT NAME: ERIC. S. LEMBKE

SIGNATURE: _____

DATE: _____ LIC. NO. 42748

PRELIMINARY 10%

CITY OF CHASKA, MINNESOTA

2022 DOWNTOWN RECONSTRUCTION

EXISITING CONDITIONS AND REMOVALS

N MAPLE ST

NO	REVISION	DATE

SURVEY	PWR
DRAWN	BJ/BF/JP/PJW
DESIGNED	ESL
CHECKED	KPA
APPROVED	ESL
PROJ. NO.	193805454

SHEET NUMBER

C0.06

Date: 10/30/2022 - 2:25pm
Login: \\stantec.com\ca\ham\dfs01\atm\92410\193805454\CD01.dwg
Xrefs: 193805454-B ORDER, 193805454-XSTI, 193805454-XFL, 193805454 - ADDRESS NUMBERS, 193804572 - XSNO, 193805454-MarkHurd, 193805454-XSXU

THE CONTRACTOR SHALL VERIFY AND BE RESPONSIBLE FOR ALL DIMENSIONS. DO NOT SCALE THE DRAWING - ANY ERRORS OR OMISSIONS SHALL BE REPORTED TO STANTEC WITHOUT DELAY. ALL REPORTS, PLANS & THE COPYRIGHTS TO ALL DESIGNS AND DRAWINGS ARE THE PROPERTY OF STANTEC. REPRODUCTION OR USE FOR ANY PURPOSE OTHER THAN THAT AUTHORIZED BY STANTEC IS FORBIDDEN.

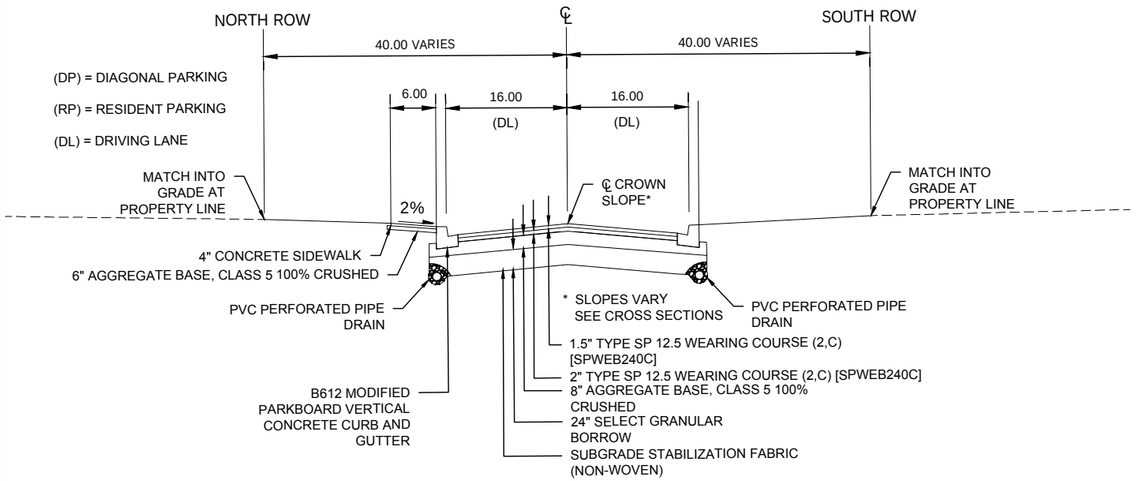

TYPICAL SECTION
FIFTH ST. (MAPLE TO BEECH)

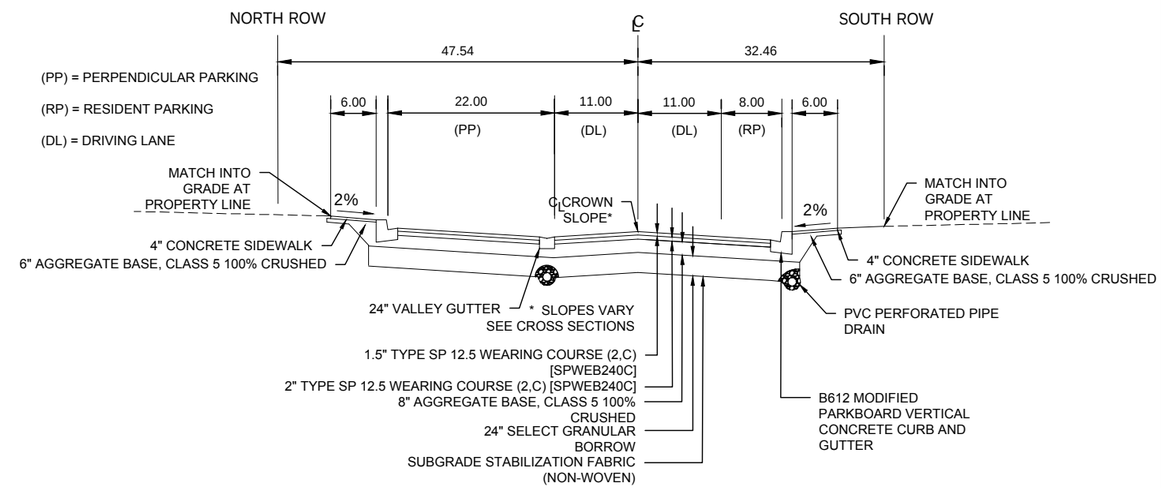

TYPICAL SECTION
SIXTH ST. (EAST OF OAK)

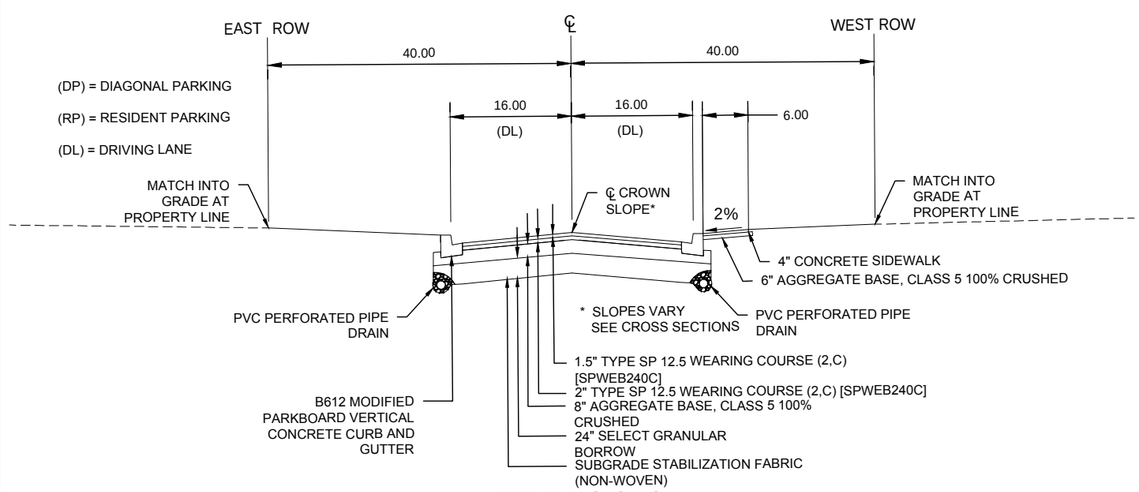

TYPICAL SECTION
MAPLE ST. (SIXTH TO FIFTH)

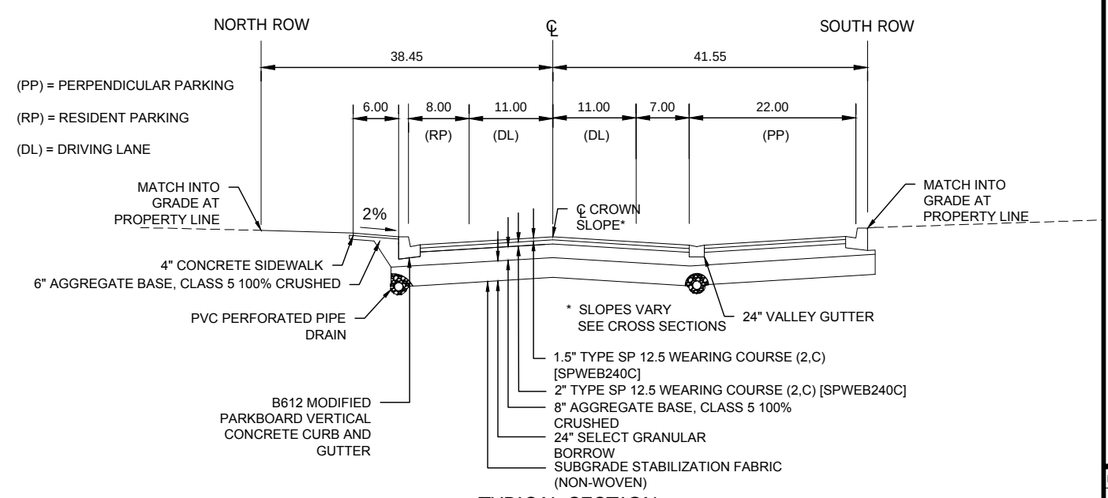

TYPICAL SECTION
SIXTH ST. (WEST OF OAK)

GENERAL NOTES:

1. CROSS SLOPE VARIES ON STREETS AND BOULEVARDS. SEE CROSS SECTION SHEETS.
2. SIDEWALK & BOULEVARD WIDTHS VARIES. (SEE C600s SHEET)
3. AGGREGATE BASE & SELECT GRANULAR BASE SHALL EXTEND 1.0' BEYOND BACK OF CURB.

GENERAL TOPSOIL NOTES:

1. SOD AREAS TO RECEIVE 6" OF LOAM TOPSOIL BORROW, SCREENED & PULVERIZED.
2. CONTRACTOR SHALL SALVAGE REINSTALL EXISTING TOPSOIL PER SPECIFICATIONS FOR THE USE OF RESTORATION PRIOR TO THE IMPORT OF MATERIAL FOR THESE AREAS.

Stantec
733 Marquette Avenue, Suite 1000
Minneapolis, MN 55402
www.stantec.com

I HEREBY CERTIFY THAT THIS PLAN, SPECIFICATION, OR REPORT WAS PREPARED BY ME OR UNDER MY DIRECT SUPERVISION AND THAT I AM A DULY LICENSED PROFESSIONAL ENGINEER UNDER THE LAWS OF THE STATE OF MINNESOTA.

PRINT NAME: ERIC. S. LEMBKE

SIGNATURE: _____ LIC. NO. 47248

DATE: _____

PRELIMINARY 10%

CITY OF CHASKA, MINNESOTA
2022 DOWNTOWN RECONSTRUCTION
TYPICAL SECTIONS

NO	REVISION	DATE
1	ADD. 1	6/11/21

SURVEY	PWR
DRAWN	BJ/BF/JP/PJW
DESIGNED	ESL
CHECKED	KPA
APPROVED	ESL
PROJ. NO.	193805454

SHEET NUMBER
C1.01

Date: 2/28/2022 - 10:49am
Author: ...
Xrefs: 19-029-XSNO_020-052 CHASKA 41 LANDSCAPE BASE 5th 193805454-BORDER

THE CONTRACTOR SHALL VERIFY AND BE RESPONSIBLE FOR ALL DIMENSIONS. DO NOT SCALE THE DRAWING. ANY ERRORS OR OMISSIONS SHALL BE REPORTED TO STANTEC WITHOUT DELAY. THE COPYRIGHTS TO ALL DESIGNS AND DRAWINGS ARE THE PROPERTY OF STANTEC. REPRODUCTION OR USE FOR ANY PURPOSE OTHER THAN THAT AUTHORIZED BY STANTEC IS FORBIDDEN.

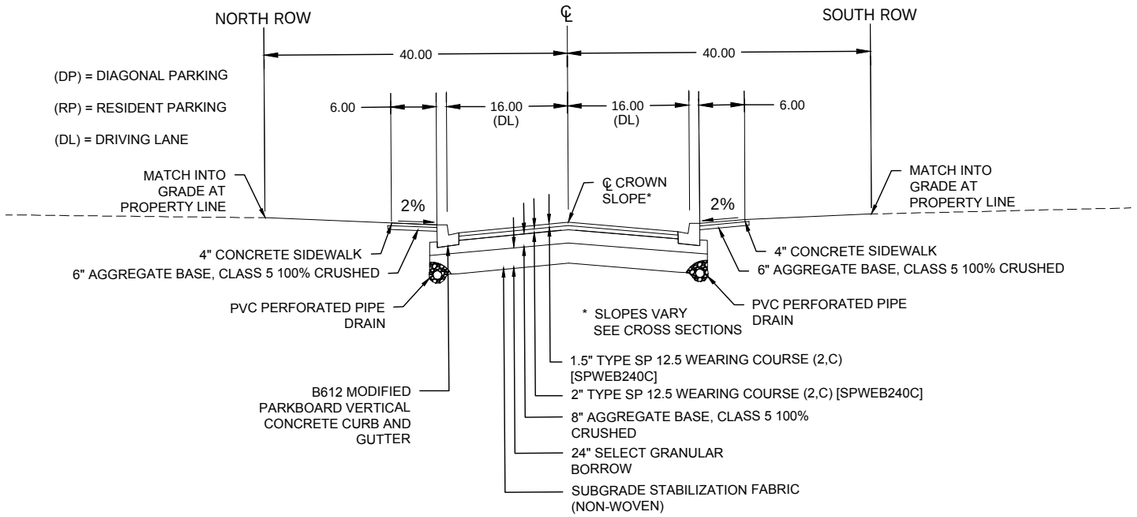

TYPICAL SECTION
SIXTH ST. (BRIDGE TO MAPLE)

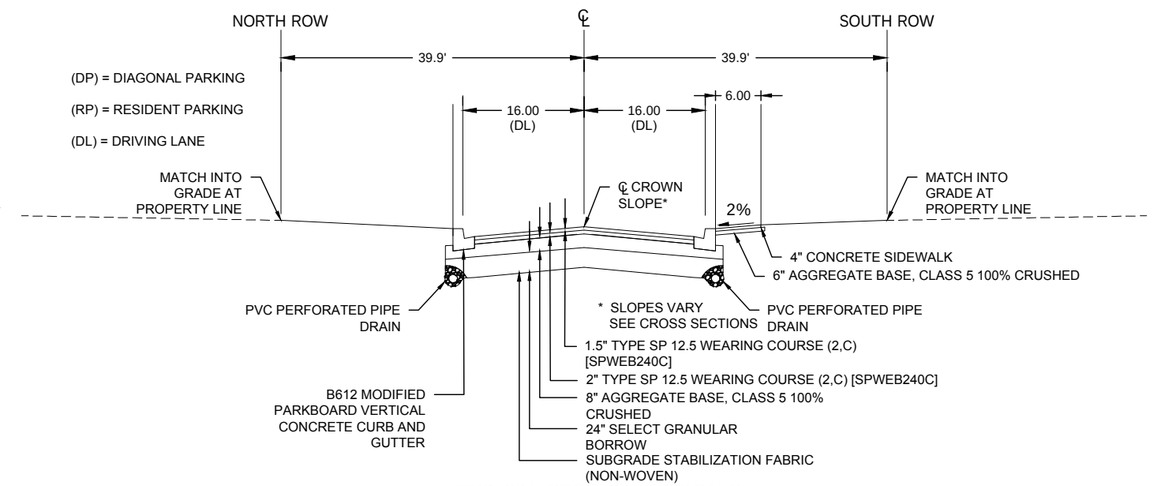

TYPICAL SECTION OPTION 2
SIXTH ST. (MAPLE TO BEECH)

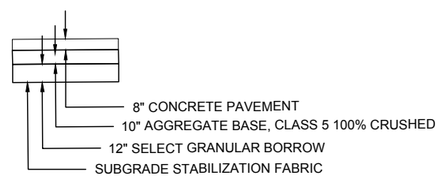

TYPICAL SECTION
CONCRETE CROSSWALKS

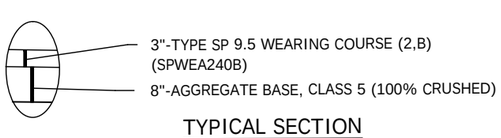

TYPICAL SECTION
BITUMINOUS DRIVEWAY

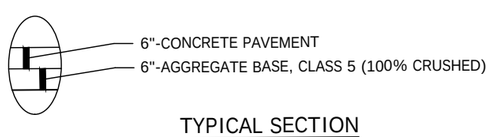

TYPICAL SECTION
CONCRETE DRIVEWAY

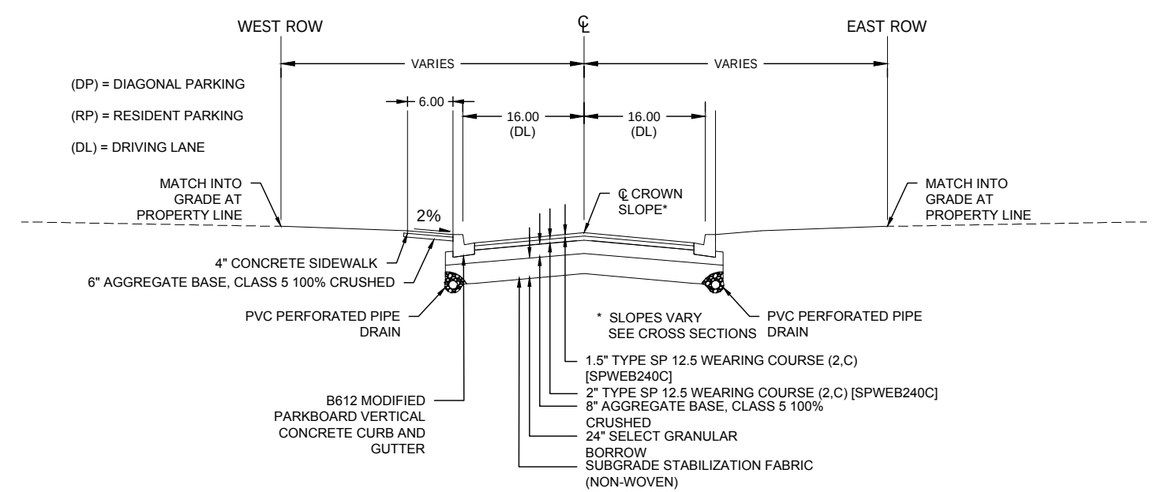

TYPICAL SECTION OPTION 2
BEECH ST. (SIXTH TO FIFTH)

GENERAL NOTES:

1. CROSS SLOPE VARIES ON STREETS AND BOULEVARDS. SEE CROSS SECTION SHEETS.
2. SIDEWALK & BOULEVARD WIDTHS VARIES. (SEE C600s SHEET)
3. AGGREGATE BASE & SELECT GRANULAR BASE SHALL EXTEND 1.0' BEYOND BACK OF CURB.

GENERAL TOPSOIL NOTES:

1. SOD AREAS TO RECEIVE 6" OF LOAM TOPSOIL BORROW, SCREENED & PULVERIZED.
2. CONTRACTOR SHALL SALVAGE REINSTALL EXISTING TOPSOIL PER SPECIFICATIONS FOR THE USE OF RESTORATION PRIOR TO THE IMPORT OF MATERIAL FOR THESE AREAS.

Stantec
733 Marquette Avenue, Suite 1000
Minneapolis, MN 55402
www.stantec.com

I HEREBY CERTIFY THAT THIS PLAN, SPECIFICATION, OR REPORT WAS PREPARED BY ME OR UNDER MY DIRECT SUPERVISION AND THAT I AM A DULY LICENSED PROFESSIONAL ENGINEER UNDER THE LAWS OF THE STATE OF MINNESOTA.

PRINT NAME: ERIC. S. LEMBKE

SIGNATURE: _____ LIC. NO. 47248

DATE: _____

PRELIMINARY 10%

CITY OF CHASKA, MINNESOTA
2022 DOWNTOWN RECONSTRUCTION
TYPICAL SECTIONS

NO	REVISION	DATE
1	ADD. 1	6/11/21

SURVEY	PWR
DRAWN	BJ/BF/JP/PJW
DESIGNED	ESL
CHECKED	KPA
APPROVED	ESL
PROJ. NO.	193805454

SHEET NUMBER
C1.02

Date: 2/28/2022 - 10:51am
User: bjohnson
File: J:\193805454\cad\civil\drawings\C100 series\C101.dwg
Xrefs: 193805454-XSNO_020-052 CHASKA 411 ANDSCAPE BASE Sth, 193805454-BORDER

THE CONTRACTOR SHALL VERIFY AND BE RESPONSIBLE FOR ALL DIMENSIONS. DO NOT SCALE THE DRAWING - ANY ERRORS OR OMISSIONS SHALL BE REPORTED TO STANTEC WITHOUT DELAY. THE COPYRIGHTS TO ALL DESIGNS AND DRAWINGS ARE THE PROPERTY OF STANTEC. REPRODUCTION OR USE FOR ANY PURPOSE OTHER THAN THAT AUTHORIZED BY STANTEC IS FORBIDDEN.

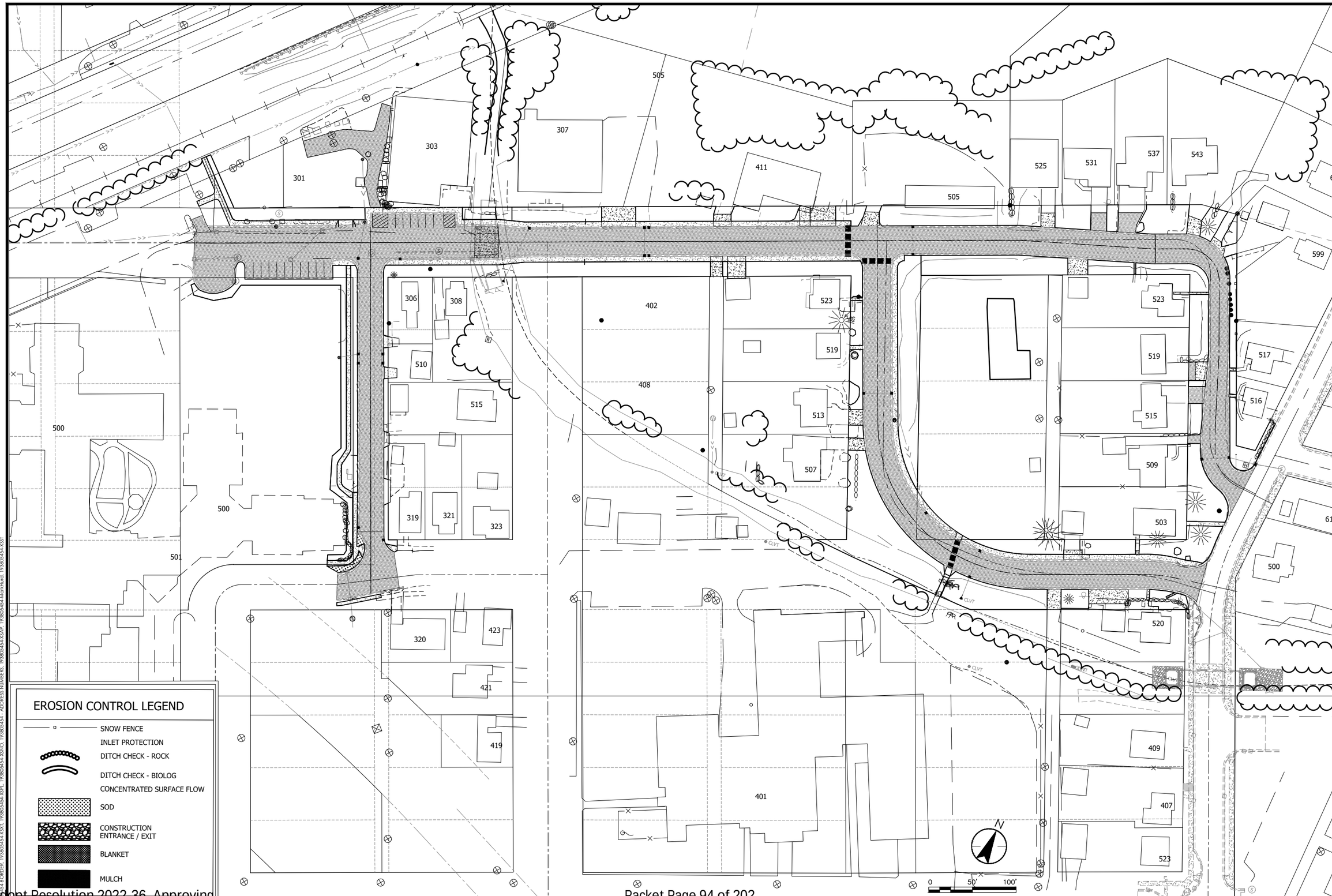

Stantec
733 Marquette Avenue, Suite 1000
Minneapolis, MN 55402
www.stantec.com

I HEREBY CERTIFY THAT THIS PLAN, SPECIFICATION, OR REPORT WAS PREPARED BY ME OR UNDER MY DIRECT SUPERVISION AND THAT I AM A DULY LICENSED PROFESSIONAL ENGINEER UNDER THE LAWS OF THE STATE OF MINNESOTA.

PRINT NAME: ERIC. S. LEMBKE

SIGNATURE:

DATE:

LIC. NO. 42748

PRELIMINARY 10%

CITY OF CHASKA, MINNESOTA

2022 DOWNTOWN RECONSTRUCTION

EROSION CONTROL AND TURF ESTABLISHMENT

NO	REVISION	DATE

SURVEY	PWR
DRAWN	BJ/BF/JP/PJW
DESIGNED	ESL
CHECKED	KPA
APPROVED	ESL
PROJ. NO.	193805454

SHEET NUMBER

C2.01

THE CONTRACTOR SHALL VERIFY AND BE RESPONSIBLE FOR ALL DIMENSIONS. DO NOT SCALE THE DRAWING - ANY ERRORS OR OMISSIONS SHALL BE REPORTED TO STANTEC WITHOUT DELAY. THE COPYRIGHTS TO ALL DESIGNS AND DRAWINGS ARE THE PROPERTY OF STANTEC. REPRODUCTION OR USE FOR ANY PURPOSE OTHER THAN THAT AUTHORIZED BY STANTEC IS FORBIDDEN.

EROSION AND SEDIMENT CONTROL – CONSTRUCTION ACTIVITY REQUIREMENTS

CHAIN OF COMMAND

1. The contractor will need to identify a Mn/DOT certified erosion control supervisor in good standing who will be knowledgeable and experienced in the application of erosion prevention and sediment control best management practices.

2. The erosion control supervisor will work with the project engineer to oversee the implementation of the SWPPP, and the installation, inspection, and maintenance of the erosion prevention and sediment control bmps before and during construction.

3. The general contractor is responsible to comply with Part II.B, Part II.C, and Part IV of the construction stormwater permit.

4. The contractor will develop a chain of command with all operators on the site to ensure that the SWPPP will be implemented and stay in effect until the construction project is complete, the entire site has undergone final stabilization, and aNnotice of Termination (NOT) has been submitted to the MPCA.

CONTACT LIST

City Project Engineer - Matt Clark - (952) 448-4335
City Inspector - Brad Fasbender - (651) 238-0603
Contractor - Unknown
MPCA Contact - Chip Hentges - (952) 393-1146
Watershed District Contact - Paul Moline - (952) 361-1825

EROSION PREVENTION PRACTICES

1. Appropriate construction practices will be used to minimize erosion. Areas of non-disturbance will be delineated (e.g. with flags, stakes, signs, silt fence etc.) on the development site before work begins.

2. The contractor will stabilize all exposed soil areas as soon as possible to limit soil erosion but in no case later than (7) days after the construction activity in that portion of the site has temporarily or permanently ceased. temporary stockpiles without significant silt, clay or organic components and the constructed base components of roads, parking lots and similar surfaces are exempt from this requirement.

3. Work in drainage swales or the normal wetted perimeter of any surface water will require stabilization within 24 hours of connection. these areas will include all areas that drain water within 200 linear feet from the property edge or point of discharge to any surface water.

4. Outlets into surface waters shall be stabilized with energy dissipation within 24 hours.

5. All areas not being worked for a period of (7) days or more shall be temporary stabilized with the appropriate means to prevent soil loss.

SEDIMENT CONTROL PRACTICES

Sediment control devices must be established on all down gradient perimeters before any up gradient land disturbing activities begin. the timing of the installation of the sediment control devices can be adjusted to accommodate short-term activities such as clearing and grubbing, or passage of vehicles. any short term activity must be completed as quickly as possible and the sediment control devices must be installed immediately after the activity is completed or prior to the next rainfall event.

A. Silt fence shall be installed so that it follows as close as possible to a single contour to capture overland, low-velocity sheet flows downgradient of all exposed soils and prior to discharging to surface waters with the silt fence j-hooked at a maximum of 100 foot intervals and shall contain no more than 1/4 acre of drainage area.
B. Ditch checks will be installed as indicated on the plans during all phases of construction.
   - temporary ditch checks will consist of using rock ditch checks and rock weepers in front of culvert inlets.
   - biologs will be installed during permanent turf establishment at the intervals identified in the plan.
C. Sediment damage from stockpiles will be minimized by placing a row of silt fence 5 feet from the toe.
D. All stockpiles left for a period of 7 days shall be temporarily stabilized.
E. All storm drain inlets will be protected by appropriate BMPs during construction until all sources with potential for discharging to the inlet have been stabilized. Inlet protection will be removed for a particular inlet if a specific safety concern (street flooding/freezing) has been identified and written correspondence has been received from the jurisdictional authority verifying the need for removal. The written correspondence will be documented in Section P of the SWPPP or available within 72 hours upon request. If written correspondence can not be obtained in a timely manner, the specific inlet protection will be removed to alleviate immediate safety concerns. Efforts to obtain written correspondence will be documented in the SWPPP. Permission to remove inlet protection based on specific safety concerns will still be obtained from the jurisdictional authority within 30 days of removal

Vehicle tracking of sediment from the construction site will be minimized using appropriate BMPs. Street sweeping will be used if such **BMPs** are not adequate to prevent sediment from being tracked onto the street

EROSION AND SEDIMENT CONTROL SEQUENCING

Grading and Utility - Silt fence, construction entrance, ditch checks and/or other suitable perimeter sediment control measures must be installed prior to the start of any grading or land disturbing activity. If needed, temporary stabilization must be established by seed and mulch, and erosion control blanket as specified in plan sheets within the required stabilization timeframes.

A sediment trap should be dug and stabilized prior to any upstream disturbance occuring.

After the pipe installation has occured, flocculent will be used at the outlet pipe, before the sediment trap to aid in filtering any sediment ladened water prior to its discharge downstream.

As soon as possible, final stabilization measures will be installed per the plans. Temporary measures will remain in place until all areas have reached final stabilization which is 70% annual vegetative cover or more.

Vehicle tracking of sediment from the construction site will be minimized using appropriate BMPs. Street sweeping will be used if such **BMPs** are not adequate to prevent sediment from being tracked onto the street

EROSION AND SEDIMENT CONTROL SEQUENCING

Grading and Utility - Silt fence, construction entrance, ditch checks and/or other suitable perimeter sediment control measures must be installed prior to the start of any grading or land disturbing activity. If needed, temporary stabilization must be established by seed and mulch, and erosion control blanket as specified in plan sheets within the required stabilization timeframes.

A sediment trap should be dug and stabilized prior to any upstream disturbance occuring.

After the pipe installation has occured, flocculent will be used at the outlet pipe, before the sediment trap to aid in filtering any sediment ladened water prior to its discharge downstream.

As soon as possible, final stabilization measures will be installed per the plans. Temporary measures will remain in place until all areas have reached final stabilization which is 70% annual vegetative cover or more.

DEWATERING AND BASIN DRAINING

Any dewatering or basin draining activities of turbid or sediment laden water must be discharged to a temporary or permanent sedimentation basin or treated with the appropriate BMP prior to entering surface waters. Energy dissipation will be provided at all discharge points. Dewatering or basin draining activities may not cause nuisance conditions, erosion in receiving channels or on downslope properties, or adversely impact wetlands. The Contractor will consult with Engineer/Owner to obtain approval prior to performing any dewatering.

POLLUTION PREVENTION MANAGEMENT MEASURES

Solid Waste: Collected sediment, asphalt and concrete millings, floating debris, paper, plastic, fabric, construction and demolition debris and other wastes must be disposed of properly and must comply with MPCA disposal requirements.

Hazardous Materials: Oil, gasoline, paint and any hazardous substances must be properly stored, including secondary containment, to prevent spills, leaks or other discharge. Restricted access to storage areas must be provided to prevent vandalism. Storage and disposal of hazardous waste must be in compliance with MPCA regulations.

External washing of trucks and other construction vehicles must be limited to a defined area of the site. Runoff must be contained and waste properly disposed of. Refer to Plans and corresponding legend for approved washout locations. No engine degreasing is allowed on site.

All liquid and solid wastes generated by concrete washout operations will be contained in a leak-proof containment facility or impermeable liner. A compacted clay liner that does not allow washout liquids to enter ground water is considered an impermeable liner. The liquid and solid wastes will not contact the ground, and there will not be runoff from the concrete washout operations or areas. Liquid and solid wastes will be disposed of properly and in compliance with MPCA regulations. A sign must be installed adjacent to each washout facility to inform concrete equipment operators to utilize the proper facilities.

INSPECTIONS AND MAINTENANCE

The City ("Owner") will conduct site inspections once every seven (7) days during active construction and within 24 hours after a rainfall event greater than 0.5 inches in 24 hours. Any corrective actions necessary will be provided to the contractor. Reports of the inspections shall be provided to the Contractor as they are completed. Inspections and maintenance records will be retained on site or in the inspectors vehicle with the SWPPP and available within 72 hours of request.

All silt fence or other sediment control practices must be repaired, replaced, or supplemented when they become nonfunctional or the sediment reaches 1/3 of the height of the fence. These repairs must be made within 24 hours of discovery, or as soon as field conditions allow access.

Construction site vehicle exit locations must be inspected for evidence of off-site sediment tracking onto paved surfaces. Tracked sediment must be removed from all off-site paved surfaces, within 24 hours of discovery.

Stantec
733 Marquette Avenue, Suite 1000
Minneapolis, MN 55402
www.stantec.com

I HEREBY CERTIFY THAT THIS PLAN, SPECIFICATION, OR REPORT WAS PREPARED BY ME OR UNDER MY DIRECT SUPERVISION AND THAT I AM A DULY LICENSED PROFESSIONAL ENGINEER UNDER THE LAWS OF THE STATE OF MINNESOTA.

PRINT NAME: ERIC S. LEMBKE

SIGNATURE:

DATE:

LIC. NO. 42748

PRELIMINARY 10%

CITY OF CHASKA, MINNESOTA
2022 DOWNTOWN RECONSTRUCTION
SWPPP

NO	REVISION	DATE

SURVEY	PWR
DRAWN	BJ/BF/JP/PJW
DESIGNED	ESL
CHECKED	KPA
APPROVED	ESL
PROJ. NO.	193805454

SHEET NUMBER
C2.02

Date: 2/10/2022 - 8:21pm
Login: pjw
Xref(s): 193805454-XBORDER, 193805454-XSXT, 193805454-XSPL, 193805454-XBNO, 193805454 - ADDRESS NUMBERS, 193805454-XSAP, 193805454-MapHybrid, 193805454-XSST

THE CONTRACTOR SHALL VERIFY AND BE RESPONSIBLE FOR ALL DIMENSIONS. DO NOT SCALE THE DRAWING. ALL DESIGNS, DRAWINGS AND SPECIFICATIONS ARE THE PROPERTY OF STANTEC. THE COPYRIGHTS TO ALL DESIGNS AND DRAWINGS ARE THE PROPERTY OF STANTEC. REPRODUCTION OR USE FOR ANY PURPOSE OTHER THAN THAT AUTHORIZED BY STANTEC IS FORBIDDEN.

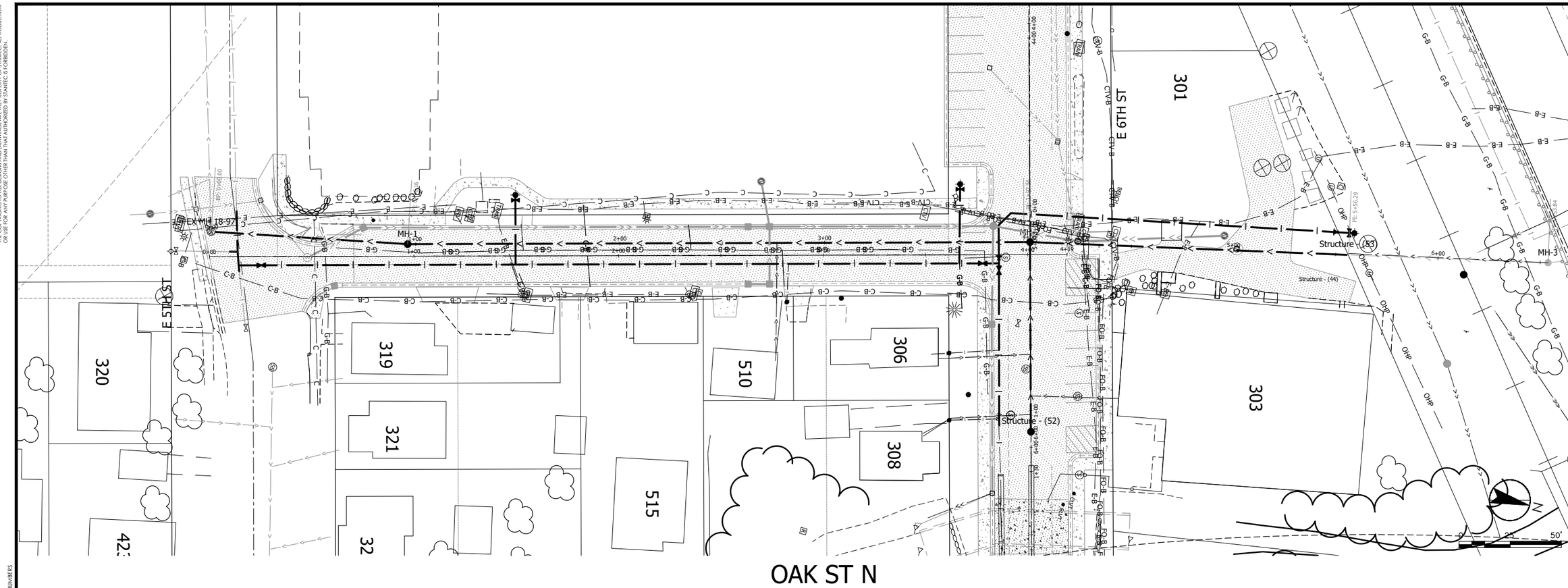

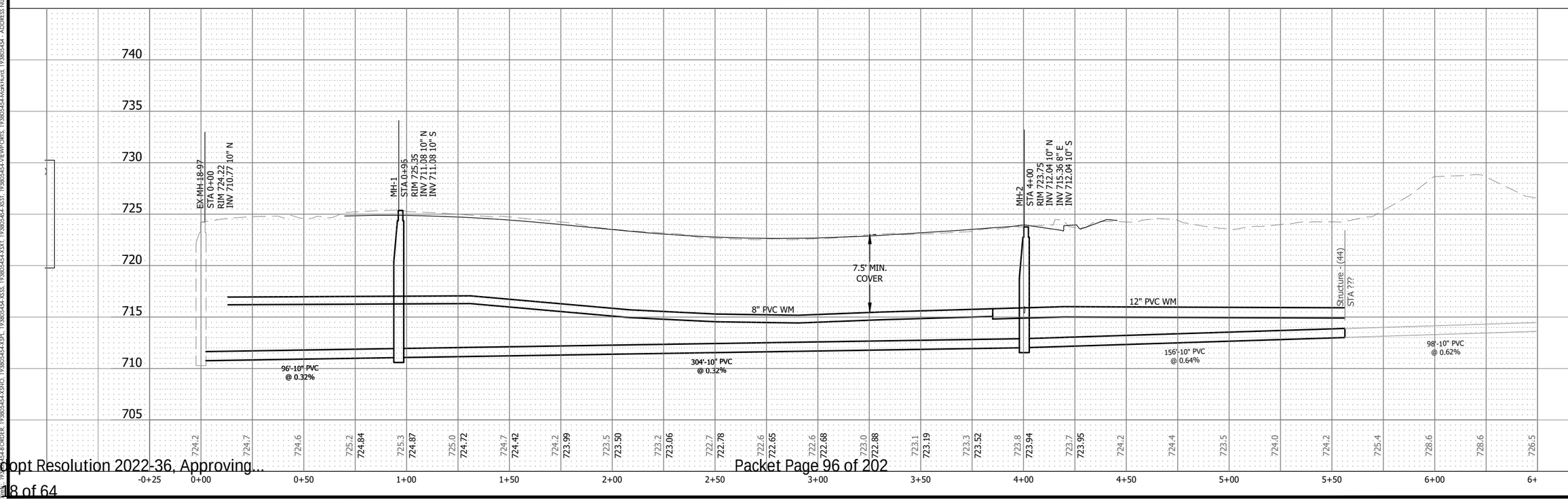

Stantec
733 Marquette Avenue, Suite 1000
Minneapolis, MN 55402
www.stantec.com

I HEREBY CERTIFY THAT THIS PLAN, SPECIFICATION, OR REPORT WAS PREPARED BY ME OR UNDER MY DIRECT SUPERVISION AND THAT I AM A DULY LICENSED PROFESSIONAL ENGINEER UNDER THE LAWS OF THE STATE OF MINNESOTA.

PRINT NAME: ERIC S. LEMBKE

SIGNATURE:

DATE:

LIC. NO. 49748

PRELIMINARY 10%

CITY OF CHASKA, MINNESOTA

2022 DOWNTOWN RECONSTRUCTION

OAK STREET

SANITARY SEWER AND WATERMAIN IMPROVEMENTS

NO	REVISION	DATE

SURVEY	PWR
DRAWN	BJ/BF/JP/PJW
DESIGNED	ESL
CHECKED	KPA
APPROVED	ESL
PROJ. NO.	193805454

SHEET NUMBER

C4.01

Date: 12/30/2022 - 8:28pm
Drawing: P:\193805454\CAD\Civil\Plan\01\dwg\PG101\193805454-C400.dwg
Layout: 193805454-ORDER, 193805454-XSNO, 193805454-XGPL, 193805454-XSSS, 193805454-XXST, 193805454-XXST1, 193805454-VIEWPORTS, 193805454-Mrphkhwrd, 193805454 - ADDRESS NUMBERS

THE CONTRACTOR SHALL VERIFY AND BE RESPONSIBLE FOR ALL DIMENSIONS. DO NOT SCALE THE DRAWING - ANY ERRORS OR OMISSIONS SHALL BE REPORTED TO STANTEC WITHOUT DELAY. THE COPYRIGHTS TO ALL DESIGNS AND DRAWINGS ARE THE PROPERTY OF STANTEC. REPRODUCTION OR USE FOR ANY PURPOSE OTHER THAN THAT AUTHORIZED BY STANTEC IS FORBIDDEN.

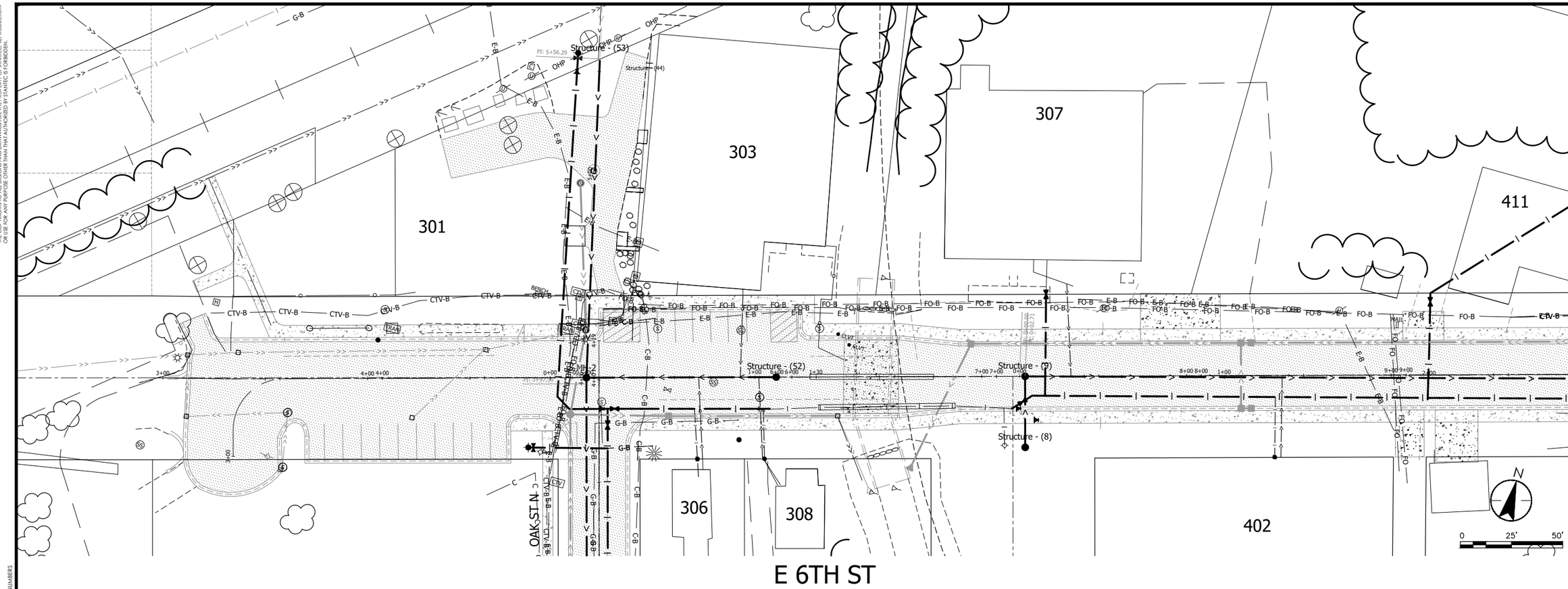

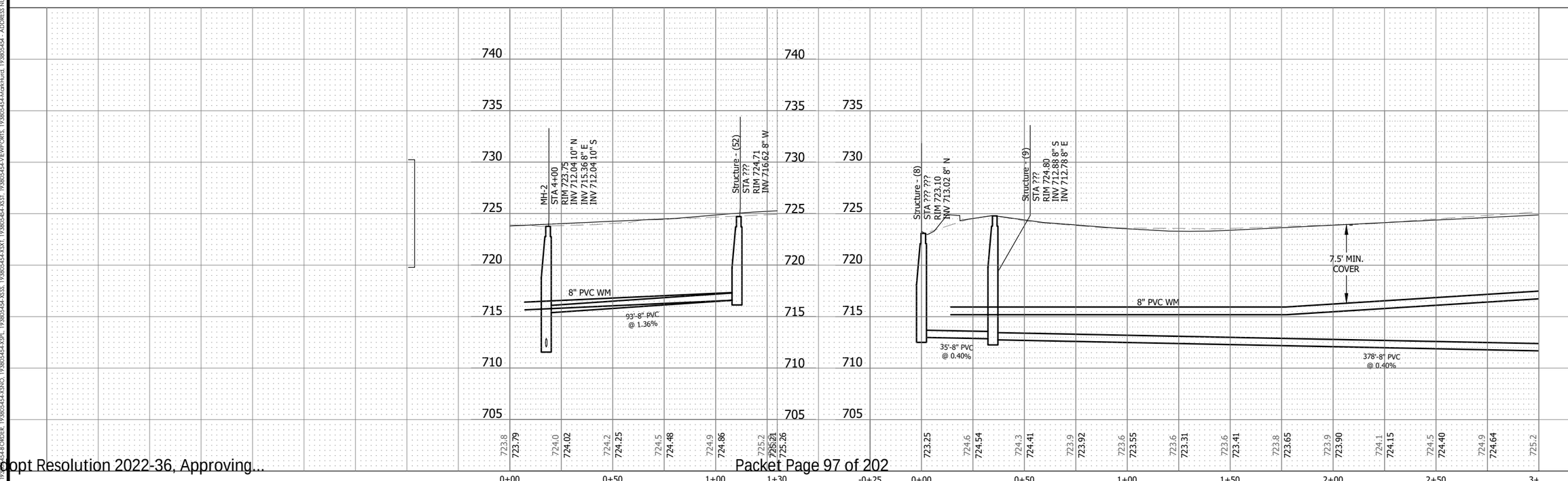

Stantec
733 Marquette Avenue, Suite 1000
Minneapolis, MN 55402
www.stantec.com

I HEREBY CERTIFY THAT THIS PLAN, SPECIFICATION, OR REPORT WAS PREPARED BY ME OR UNDER MY DIRECT SUPERVISION AND THAT I AM A DULY LICENSED PROFESSIONAL ENGINEER UNDER THE LAWS OF THE STATE OF MINNESOTA.

PRINT NAME: ERIC S. LEMBKE

SIGNATURE:

DATE:

LIC. NO. 42748

PRELIMINARY 10%

CITY OF CHASKA, MINNESOTA

2022 DOWNTOWN RECONSTRUCTION

SIXTH STREET

SANITARY SEWER AND WATERMAIN IMPROVEMENTS

NO	REVISION	DATE

SURVEY	PWR
DRAWN	BJ/BF/JP/PJW
DESIGNED	ESL
CHECKED	KPA
APPROVED	ESL
PROJ. NO.	193805454

SHEET NUMBER

C4.02

THE CONTRACTOR SHALL VERIFY AND BE RESPONSIBLE FOR ALL DIMENSIONS. DO NOT SCALE THE DRAWING. ALL DESIGNS, DRAWINGS AND SPECIFICATIONS ARE THE PROPERTY AND PROPRIETARY PROPERTY OF THE COPYRIGHTS TO ALL DESIGNS AND DRAWINGS ARE THE PROPERTY OF STANTEC. REPRODUCTION OR USE FOR ANY PURPOSE OTHER THAN THAT AUTHORIZED BY STANTEC IS FORBIDDEN.

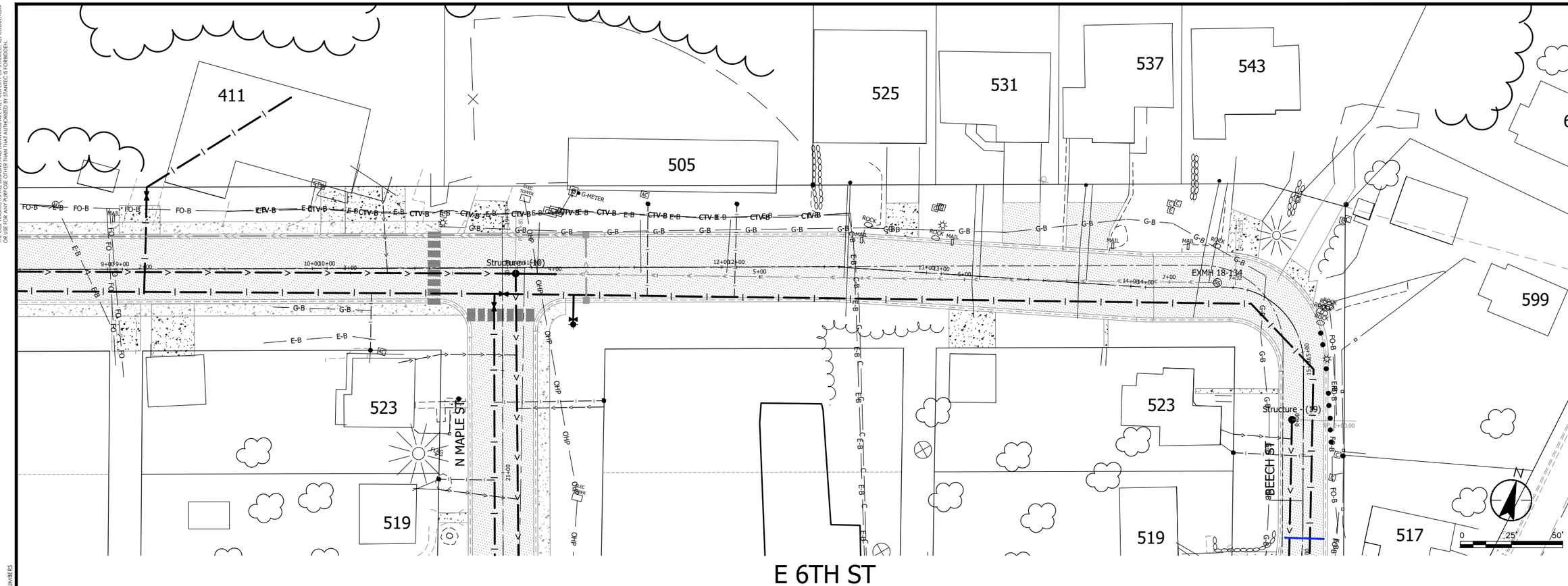

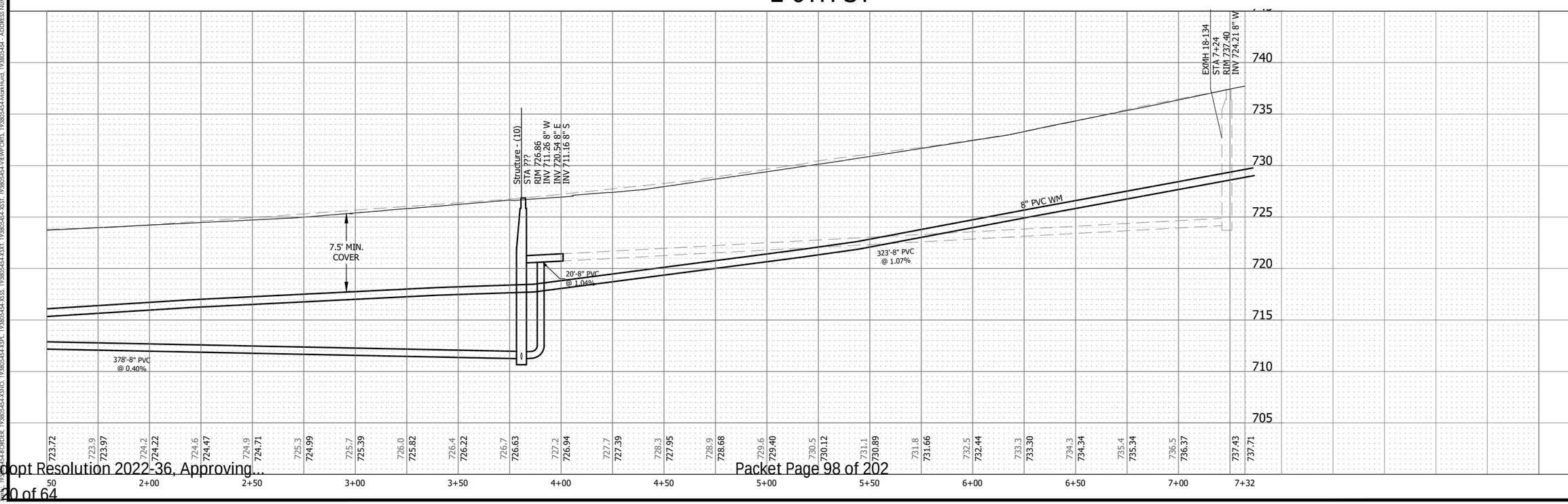

Stantec
733 Marquette Avenue, Suite 1000
Minneapolis, MN 55402
www.stantec.com

I HEREBY CERTIFY THAT THIS PLAN, SPECIFICATION, OR REPORT WAS PREPARED BY ME OR UNDER MY DIRECT SUPERVISION AND THAT I AM A DULY LICENSED PROFESSIONAL ENGINEER UNDER THE LAWS OF THE STATE OF MINNESOTA.

PRINT NAME: ERIC S. LEMBKE

SIGNATURE:

DATE:

LIC. NO. 42748

PRELIMINARY 10%

CITY OF CHASKA, MINNESOTA

2022 DOWNTOWN RECONSTRUCTION

SIXTH STREET

SANITARY SEWER AND WATERMAIN IMPROVEMENTS

NO	REVISION	DATE

SURVEY	PWR
DRAWN	BJ/BF/JP/PJW
DESIGNED	ESL
CHECKED	KPA
APPROVED	ESL
PROJ. NO.	193805454

SHEET NUMBER

C4.03

THE CONTRACTOR SHALL VERIFY AND BE RESPONSIBLE FOR ALL DIMENSIONS. DO NOT SCALE THE DRAWING - ANY ERRORS OR OMISSIONS SHALL BE REPORTED TO STANTEC WITHOUT DELAY. THE COPYRIGHTS TO ALL DESIGNS AND DRAWINGS ARE THE PROPERTY OF STANTEC. REPRODUCTION OR USE FOR ANY PURPOSE OTHER THAN THAT AUTHORIZED BY STANTEC IS FORBIDDEN.

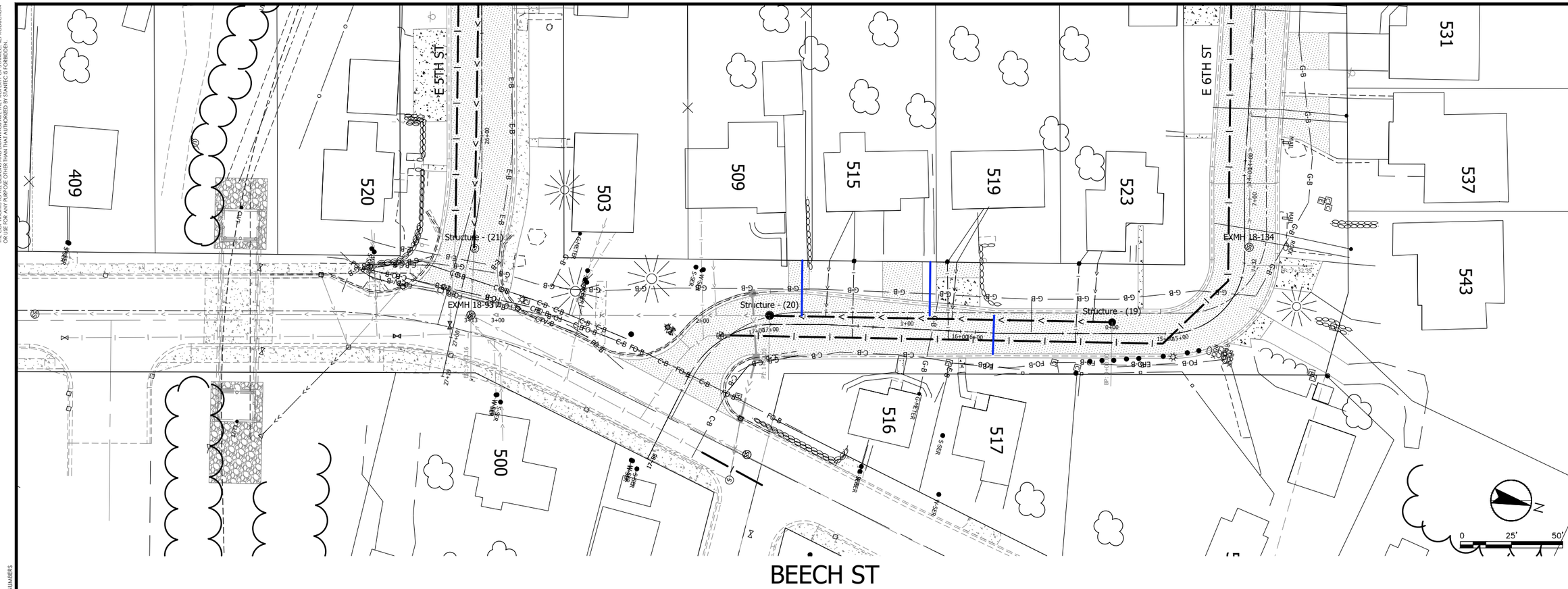

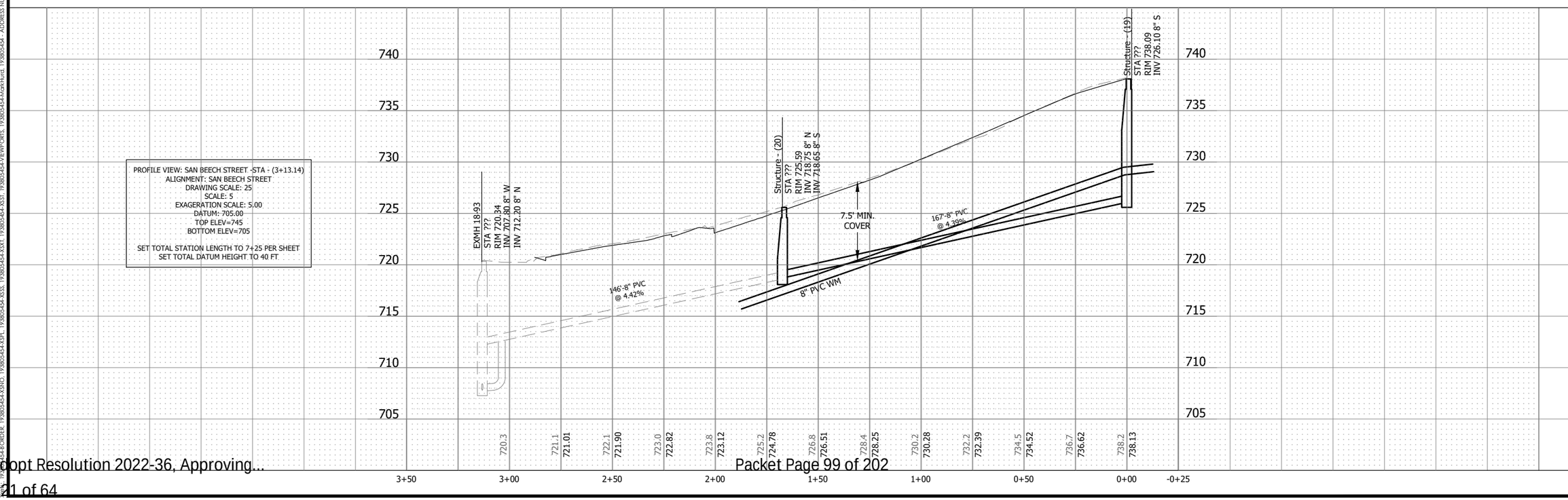

Stantec
733 Marquette Avenue, Suite 1000
Minneapolis, MN 55402
www.stantec.com

I HEREBY CERTIFY THAT THIS PLAN, SPECIFICATION, OR REPORT WAS PREPARED BY ME OR UNDER MY DIRECT SUPERVISION AND THAT I AM A DULY LICENSED PROFESSIONAL ENGINEER UNDER THE LAWS OF THE STATE OF MINNESOTA.

PRINT NAME: ERIC. S. LEMBKE

SIGNATURE:

DATE:

LIC. NO. 42748

PRELIMINARY 10%

CITY OF CHASKA, MINNESOTA

2022 DOWNTOWN RECONSTRUCTION

BEECH STREET

SANITARY SEWER AND WATERMAIN IMPROVEMENTS

NO	REVISION	DATE

SURVEY	PWR
DRAWN	BJ/BF/JP/PJW
DESIGNED	ESL
CHECKED	KPA
APPROVED	ESL
PROJ. NO.	193805454

SHEET NUMBER

C4.04

THE CONTRACTOR SHALL VERIFY AND BE RESPONSIBLE FOR ALL DIMENSIONS. DO NOT SCALE THE DRAWING - ANY ERRORS OR OMISSIONS SHALL BE REPORTED TO STANTEC WITHOUT DELAY. THE COPYRIGHTS TO ALL DESIGNS AND DRAWINGS ARE THE PROPERTY OF STANTEC. REPRODUCTION OR USE FOR ANY PURPOSE OTHER THAN THAT AUTHORIZED BY STANTEC IS FORBIDDEN.

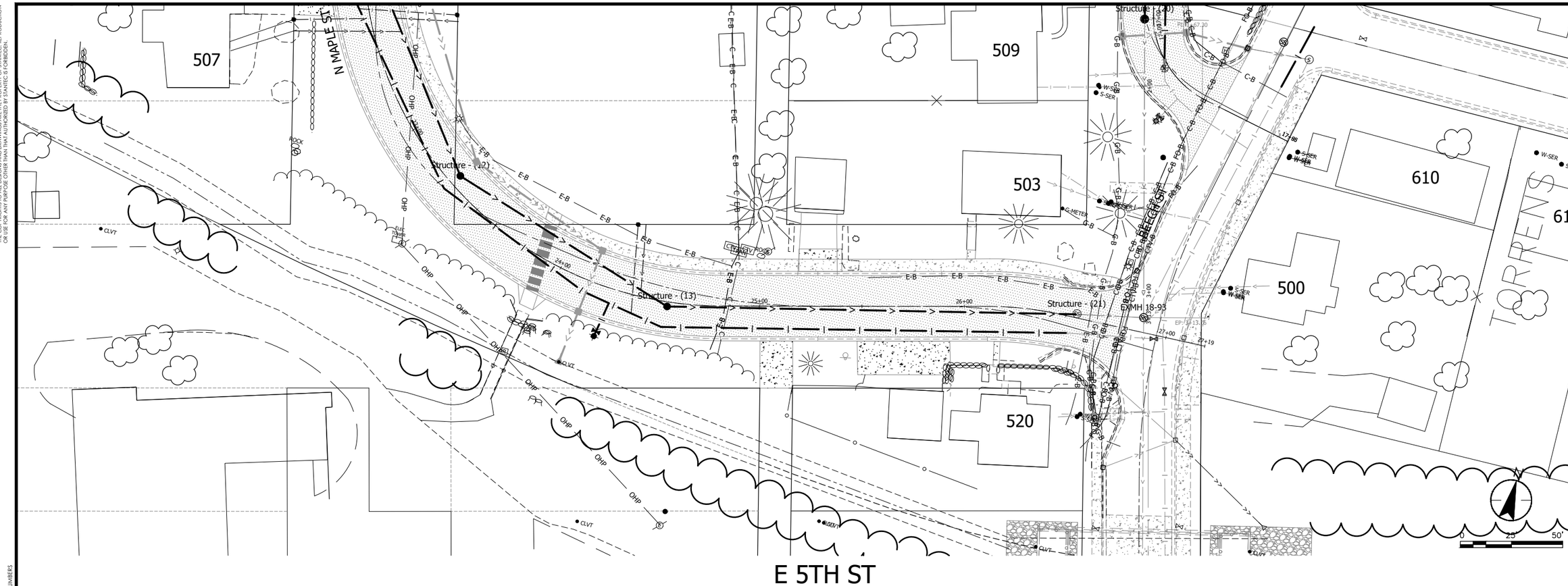

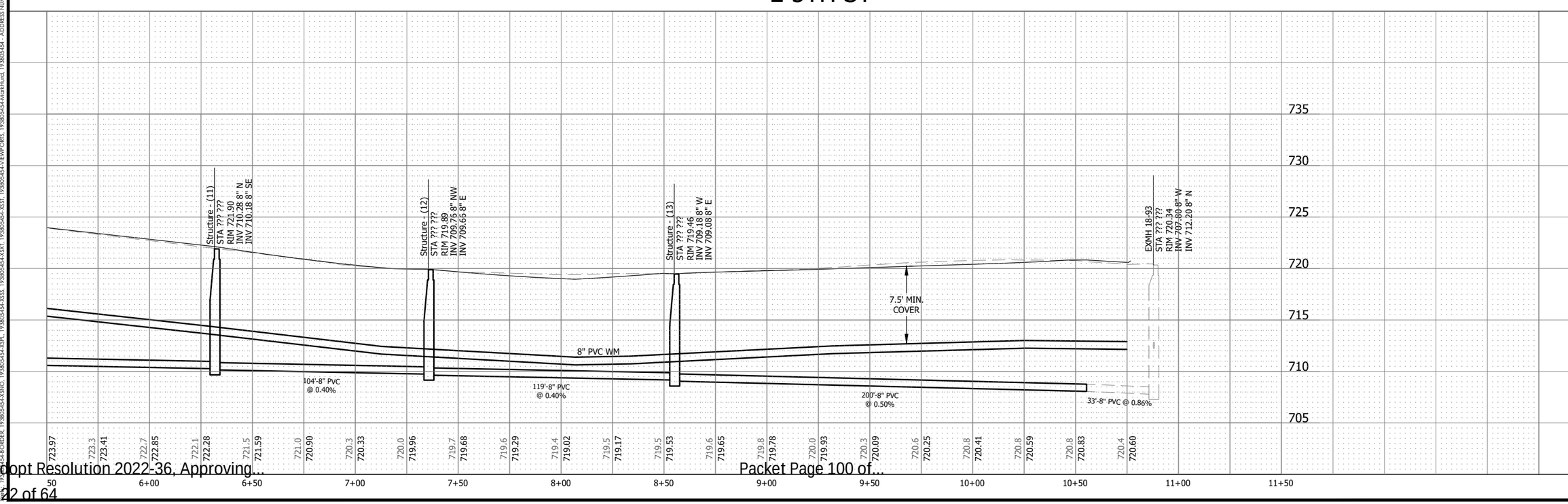

Stantec
733 Marquette Avenue, Suite 1000
Minneapolis, MN 55402
www.stantec.com

I HEREBY CERTIFY THAT THIS PLAN, SPECIFICATION, OR REPORT WAS PREPARED BY ME OR UNDER MY DIRECT SUPERVISION AND THAT I AM A DULY LICENSED PROFESSIONAL ENGINEER UNDER THE LAWS OF THE STATE OF MINNESOTA.

PRINT NAME: ERIC. S. LEMBKE

SIGNATURE: _____ LIC. NO. 42748

DATE: _____

PRELIMINARY 10%

CITY OF CHASKA, MINNESOTA

2022 DOWNTOWN RECONSTRUCTION

FIFTH STREET

SANITARY SEWER AND WATERMAIN IMPROVEMENTS

NO	REVISION	DATE

SURVEY	PWR
DRAWN	BJ/BF/JP/PJW
DESIGNED	ESL
CHECKED	KPA
APPROVED	ESL
PROJ. NO.	193805454

SHEET NUMBER

C4.05

THE CONTRACTOR SHALL VERIFY AND BE RESPONSIBLE FOR ALL DIMENSIONS. DO NOT SCALE THE DRAWING - ANY ERRORS OR OMISSIONS SHALL BE REPORTED TO STANTEC WITHOUT DELAY. THE COPYRIGHTS TO ALL DESIGNS AND DRAWINGS ARE THE PROPERTY OF STANTEC. REPRODUCTION OR USE FOR ANY PURPOSE OTHER THAN THAT AUTHORIZED BY STANTEC IS FORBIDDEN.

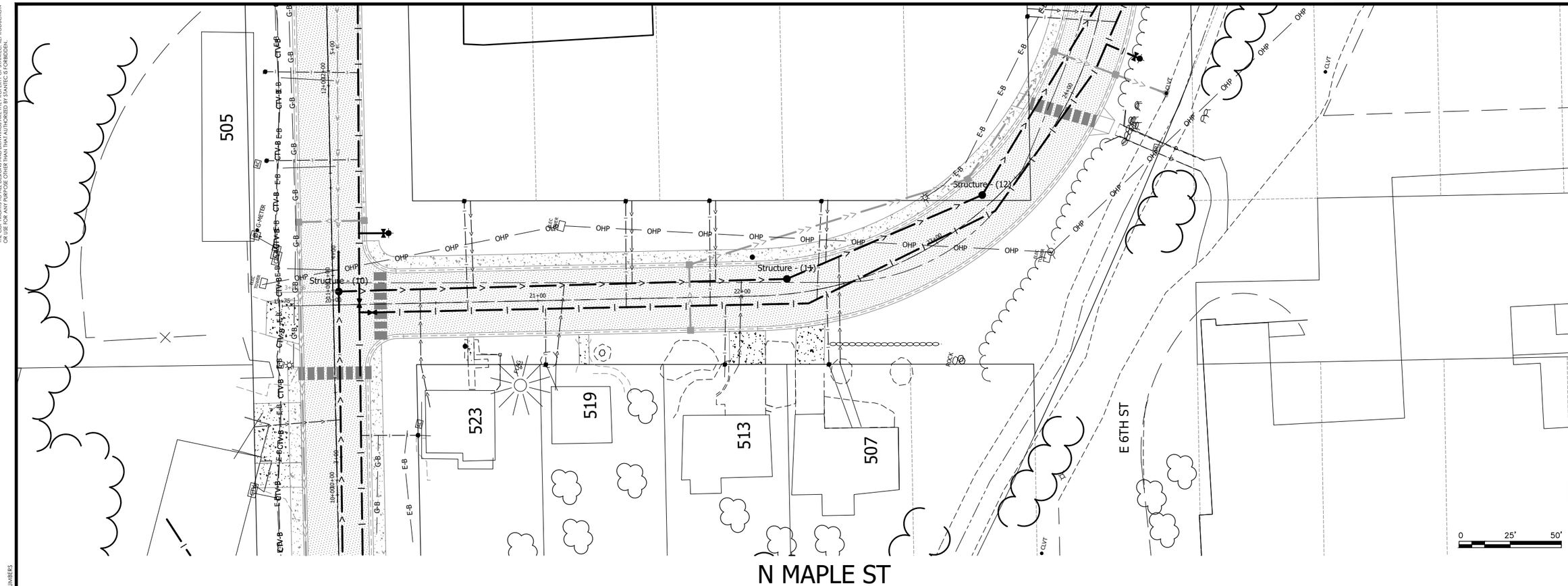

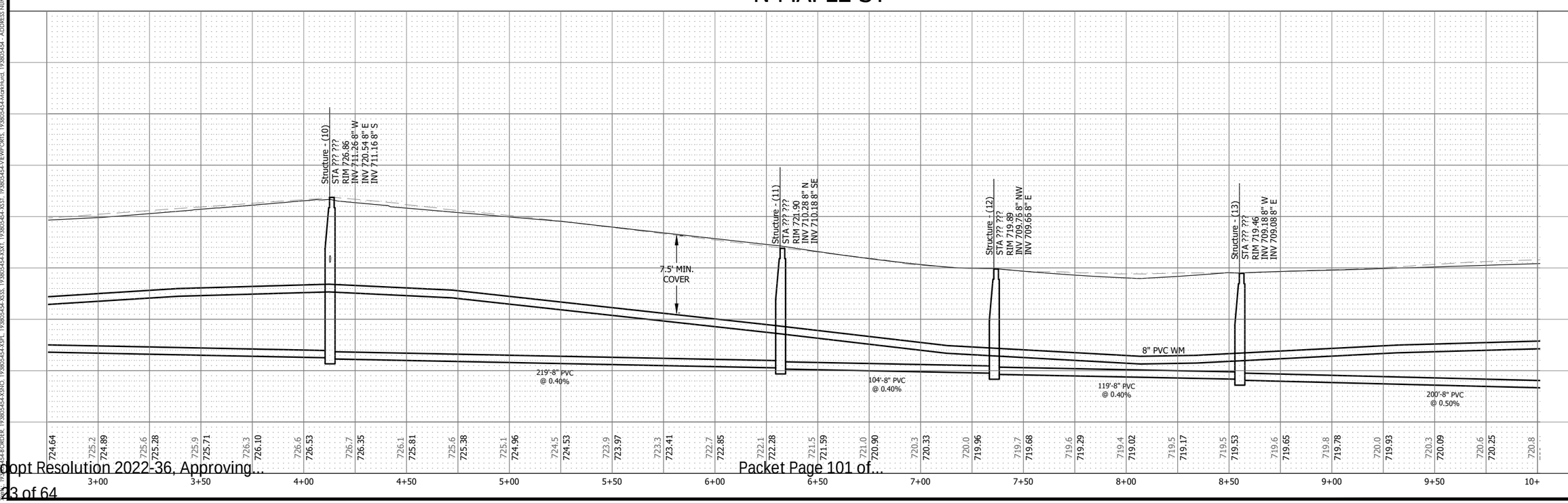

Stantec
733 Marquette Avenue, Suite 1000
Minneapolis, MN 55402
www.stantec.com

I HEREBY CERTIFY THAT THIS PLAN, SPECIFICATION, OR REPORT WAS PREPARED BY ME OR UNDER MY DIRECT SUPERVISION AND THAT I AM A DULY LICENSED PROFESSIONAL ENGINEER UNDER THE LAWS OF THE STATE OF MINNESOTA.

PRINT NAME: ERIC S. LEMBKE

SIGNATURE:

DATE:

LIC. NO. 42748

PRELIMINARY 10%

CITY OF CHASKA, MINNESOTA

2022 DOWNTOWN RECONSTRUCTION

MAPLE STREET

SANITARY SEWER AND WATERMAIN IMPROVEMENTS

NO	REVISION	DATE

SURVEY	PWR
DRAWN	BJ/BF/JP/PJW
DESIGNED	ESL
CHECKED	KPA
APPROVED	ESL
PROJ. NO.	193805454

SHEET NUMBER

C4.06

Date: 2/10/2022 - 8:29pm
Drawing: V:\1938\active\193805454\civil\drawings\Plan Sets\Phase 01\dwg\PA101-193805454-C400.dwg
Xrefs: 193805454-ORDER, 193805454-XSNO, 193805454-XGPL, 193805454-XSSS, 193805454-XXST, 193805454-XSST, 193805454-VIEWPORTS, 193805454-Mapkhard, 193805454- ADDRESS NUMBERS

THE CONTRACTOR SHALL VERIFY AND BE RESPONSIBLE FOR ALL DIMENSIONS. DO NOT SCALE THE DRAWING - ANY ERRORS OR OMISSIONS SHALL BE REPORTED TO STANTEC WITHOUT DELAY. THE COPYRIGHTS TO ALL DESIGNS AND DRAWINGS ARE THE PROPERTY OF STANTEC. REPRODUCTION OR USE FOR ANY PURPOSE OTHER THAN THAT AUTHORIZED BY STANTEC IS FORBIDDEN.

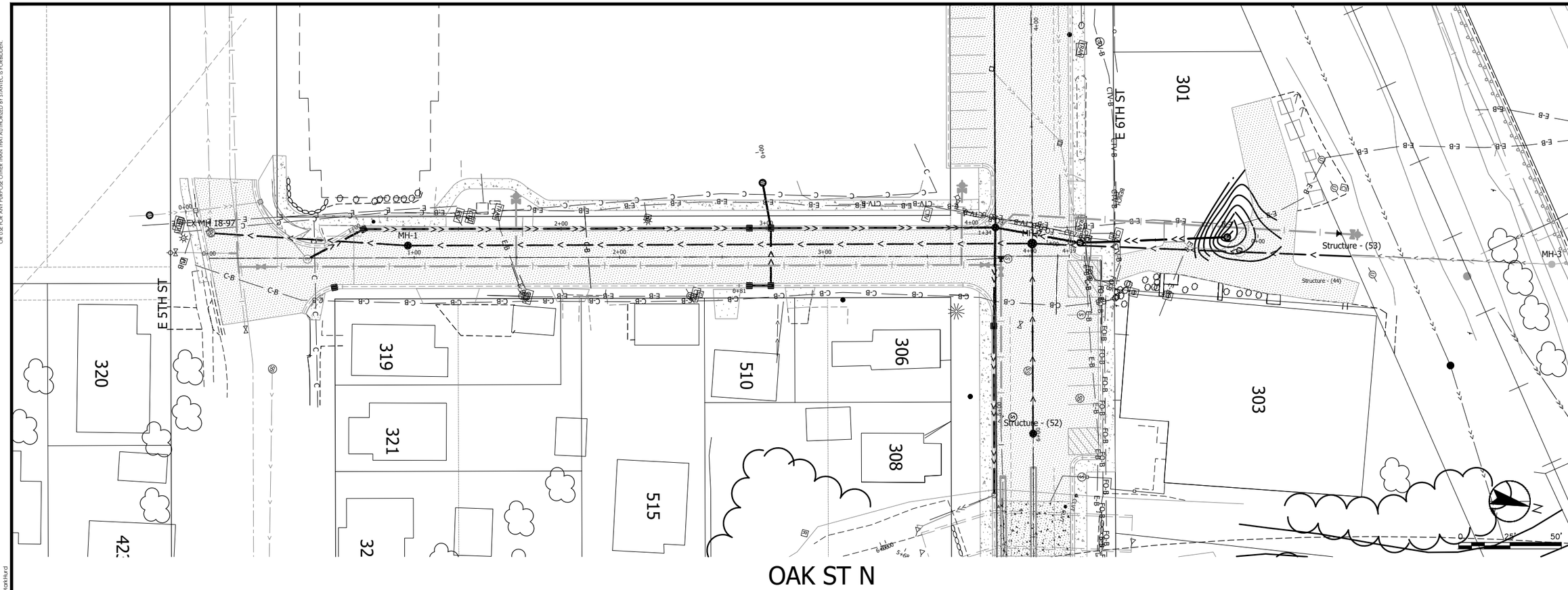

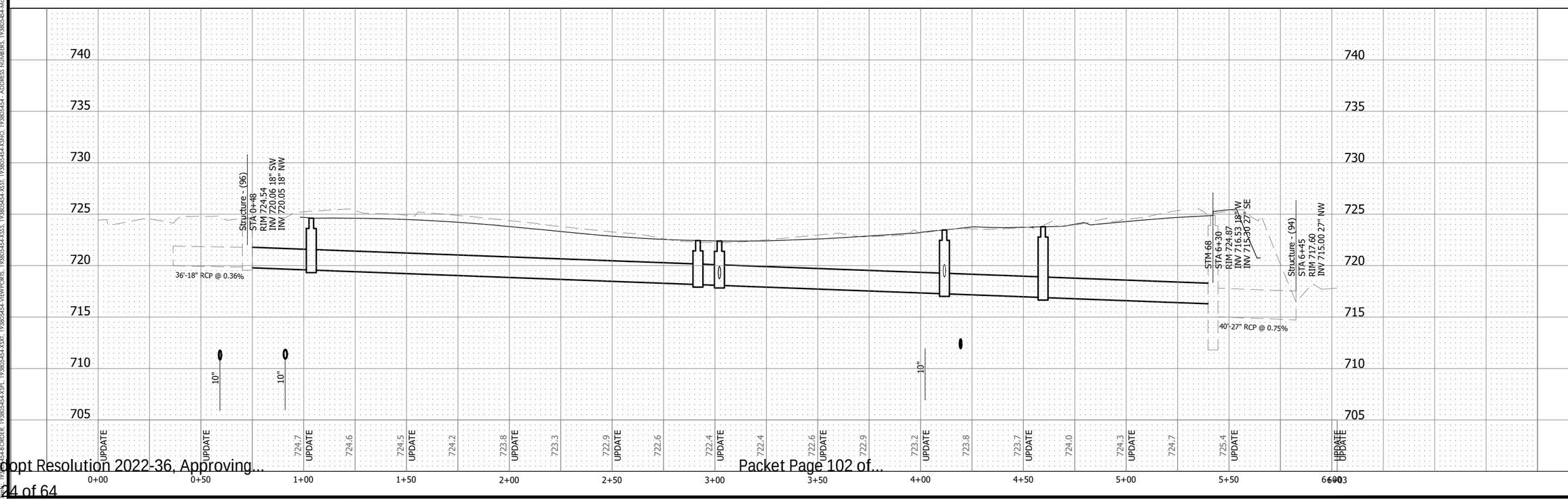

Stantec
733 Marquette Avenue, Suite 1000
Minneapolis, MN 55402
www.stantec.com

I HEREBY CERTIFY THAT THIS PLAN, SPECIFICATION, OR REPORT WAS PREPARED BY ME OR UNDER MY DIRECT SUPERVISION AND THAT I AM A DULY LICENSED PROFESSIONAL ENGINEER UNDER THE LAWS OF THE STATE OF MINNESOTA.

PRINT NAME: ERIC. S. LEMBKE

SIGNATURE: _____ LIC. NO. 42748

DATE: _____

PRELIMINARY 10%

CITY OF CHASKA, MINNESOTA

2022 DOWNTOWN RECONSTRUCTION
STORM SEWER IMPROVEMENTS
OAK STREET

NO	REVISION	DATE

SURVEY	PWR
DRAWN	BJ/BF/JP/PJW
DESIGNED	ESL
CHECKED	KPA
APPROVED	ESL
PROJ. NO.	193805454

SHEET NUMBER
C5.01

THE CONTRACTOR SHALL VERIFY AND BE RESPONSIBLE FOR ALL DIMENSIONS. DO NOT SCALE THE DRAWING - ANY ERRORS OR OMISSIONS SHALL BE REPORTED TO STANTEC WITHOUT DELAY. THE COPYRIGHTS TO ALL DESIGNS AND DRAWINGS ARE THE PROPERTY OF STANTEC. REPRODUCTION OR USE FOR ANY PURPOSE OTHER THAN THAT AUTHORIZED BY STANTEC IS FORBIDDEN.

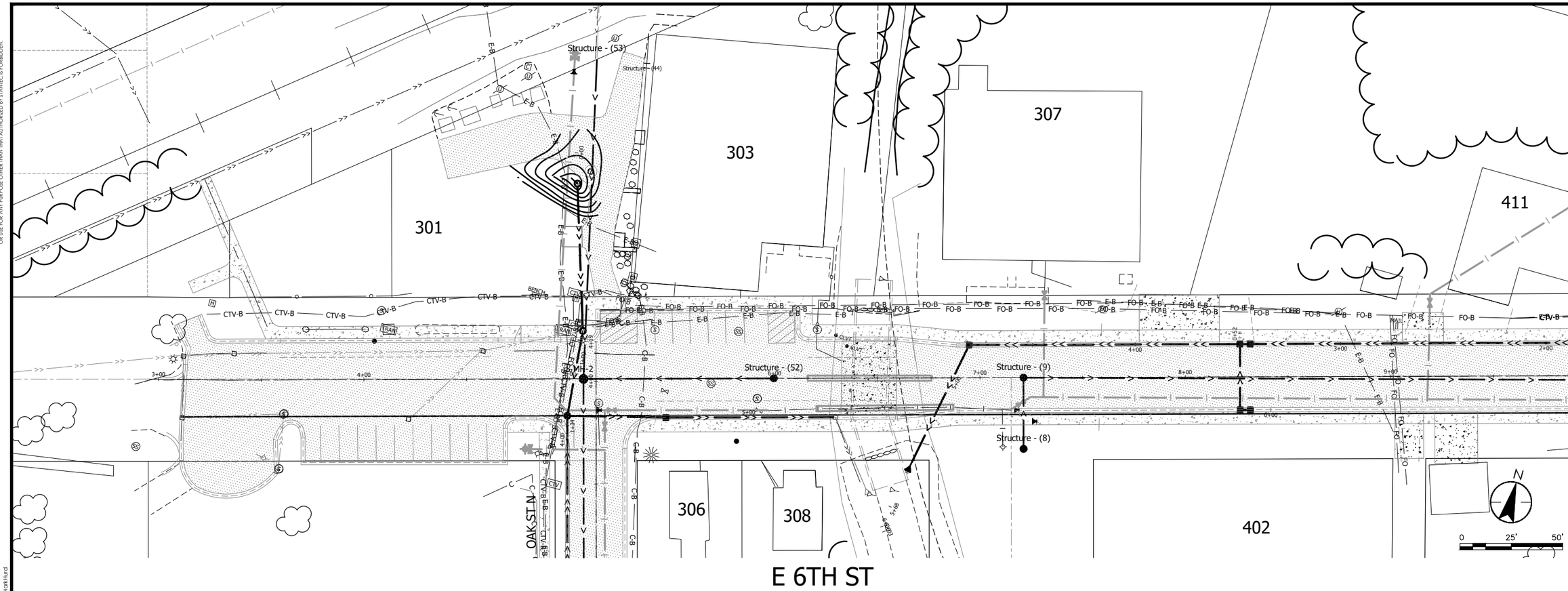

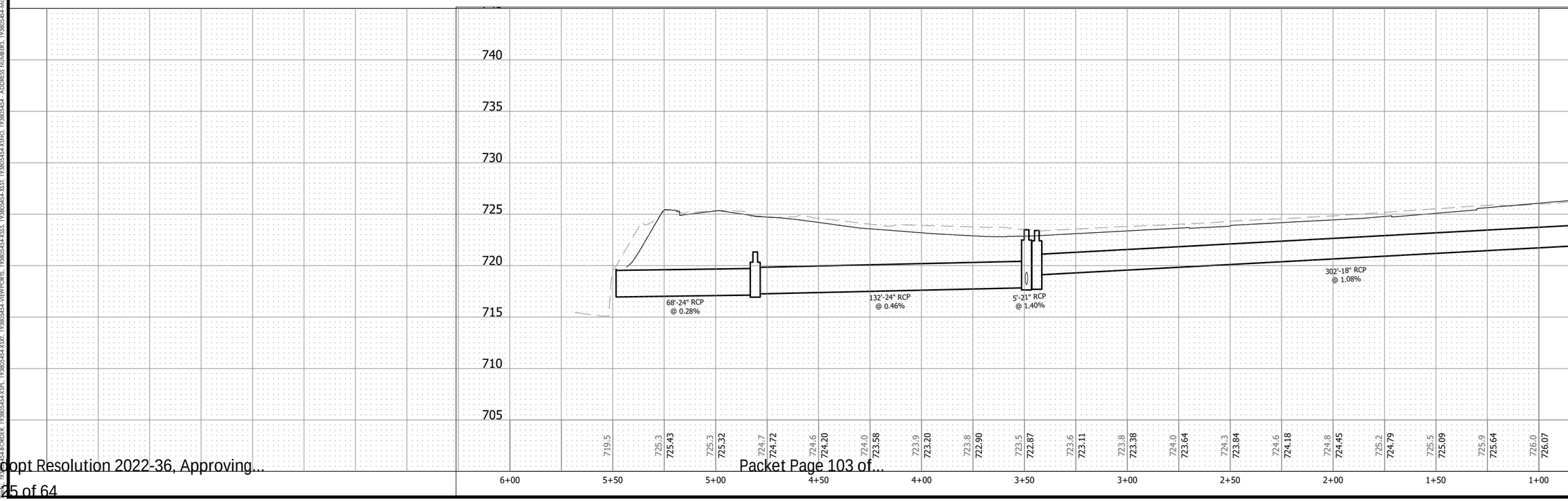

Stantec
733 Marquette Avenue, Suite 1000
Minneapolis, MN 55402
www.stantec.com

I HEREBY CERTIFY THAT THIS PLAN, SPECIFICATION, OR REPORT WAS PREPARED BY ME OR UNDER MY DIRECT SUPERVISION AND THAT I AM A DULY LICENSED PROFESSIONAL ENGINEER UNDER THE LAWS OF THE STATE OF MINNESOTA.

PRINT NAME: ERIC S. LEMBKE

SIGNATURE:

DATE:

LIC. NO. 42748

PRELIMINARY 10%

CITY OF CHASKA, MINNESOTA

2022 DOWNTOWN RECONSTRUCTION

STORM SEWER IMPROVEMENTS

SIXTH STEET

NO	REVISION	DATE

SURVEY	PWR
DRAWN	BJ/BF/JP/PJW
DESIGNED	ESL
CHECKED	KPA
APPROVED	ESL
PROJ. NO.	193805454

SHEET NUMBER

C5.01

Date: 12/30/2022 - 8:35pm
Drawing: P:\193805454\Project\Civil\dwg\2410\193805454-C500.dwg
Layout: 193805454-PLAN-PROFILE
Xrefs: 193805454-BORDER, 193805454-XXPL, 193805454-XXT, 193805454-VIEWPORTS, 193805454-XSSS, 193805454-XSTI, 193805454-XSNO, 193805454 - ADDRESS NUMBERS, 193805454-MapHtx.rd

THE CONTRACTOR SHALL VERIFY AND BE RESPONSIBLE FOR ALL DIMENSIONS. DO NOT SCALE THE DRAWING - ANY ERRORS OR OMISSIONS SHALL BE REPORTED TO STANTEC WITHOUT DELAY. THE COPYRIGHTS TO ALL DESIGNS AND DRAWINGS ARE THE PROPERTY OF STANTEC. REPRODUCTION OR USE FOR ANY PURPOSE OTHER THAN THAT AUTHORIZED BY STANTEC IS FORBIDDEN.

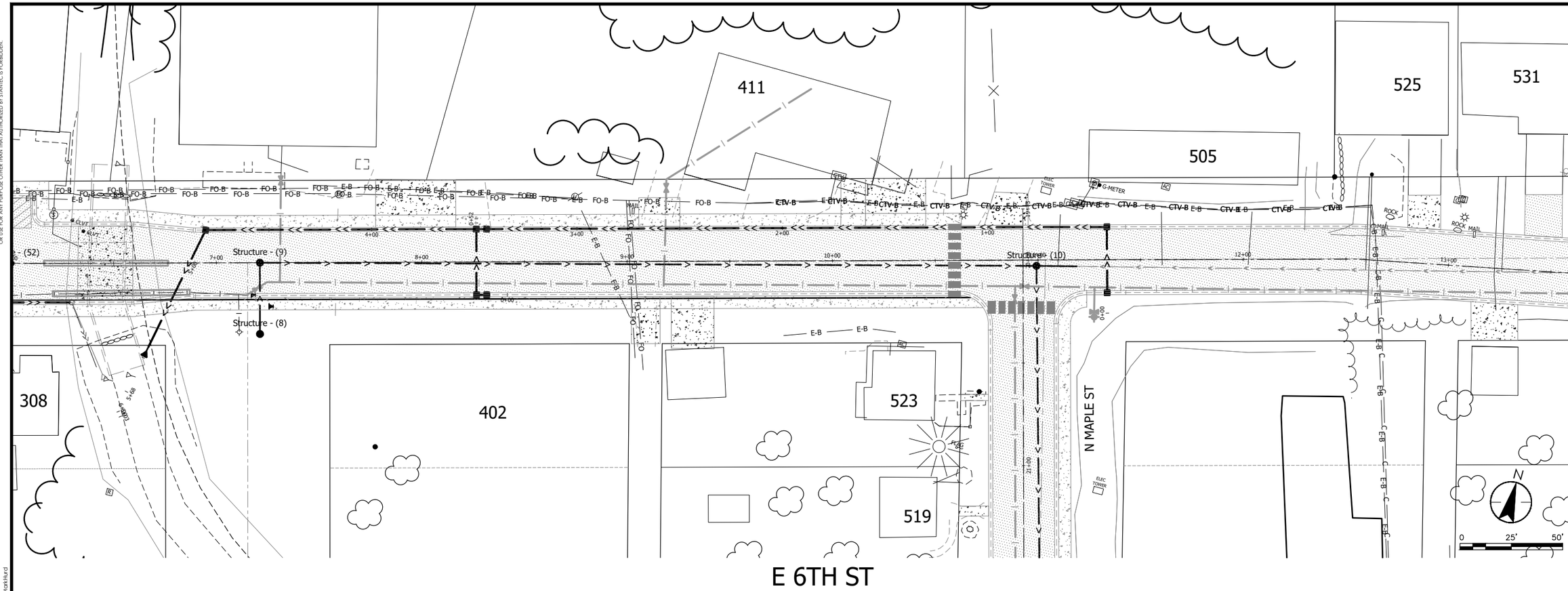

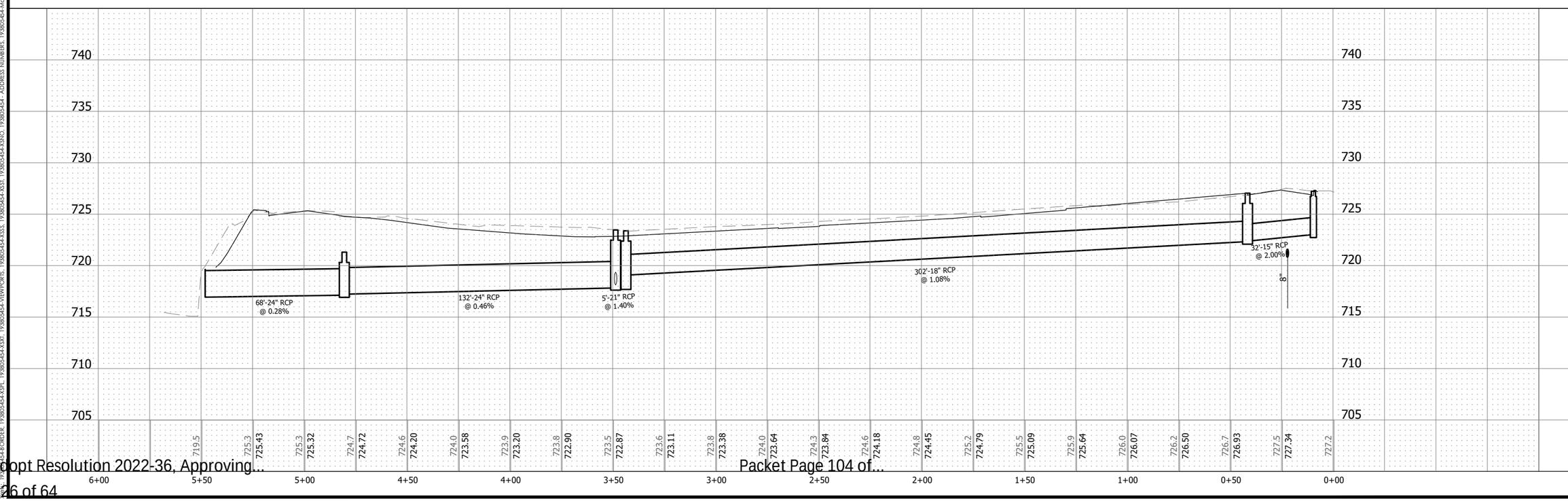

Stantec
733 Marquette Avenue, Suite 1000
Minneapolis, MN 55402
www.stantec.com

I HEREBY CERTIFY THAT THIS PLAN, SPECIFICATION, OR REPORT WAS PREPARED BY ME OR UNDER MY DIRECT SUPERVISION AND THAT I AM A DULY LICENSED PROFESSIONAL ENGINEER UNDER THE LAWS OF THE STATE OF MINNESOTA.

PRINT NAME: ERIC S. LEMBKE

SIGNATURE:

DATE:

LIC. NO. 42748

PRELIMINARY 10%

CITY OF CHASKA, MINNESOTA

2022 DOWNTOWN RECONSTRUCTION

STORM SEWER IMPROVEMENTS

SIXTH STREET

NO	REVISION	DATE

SURVEY	PWR
DRAWN	BJ/BF/JP/PJW
DESIGNED	ESL
CHECKED	KPA
APPROVED	ESL
PROJ. NO.	193805454

SHEET NUMBER

C5.03

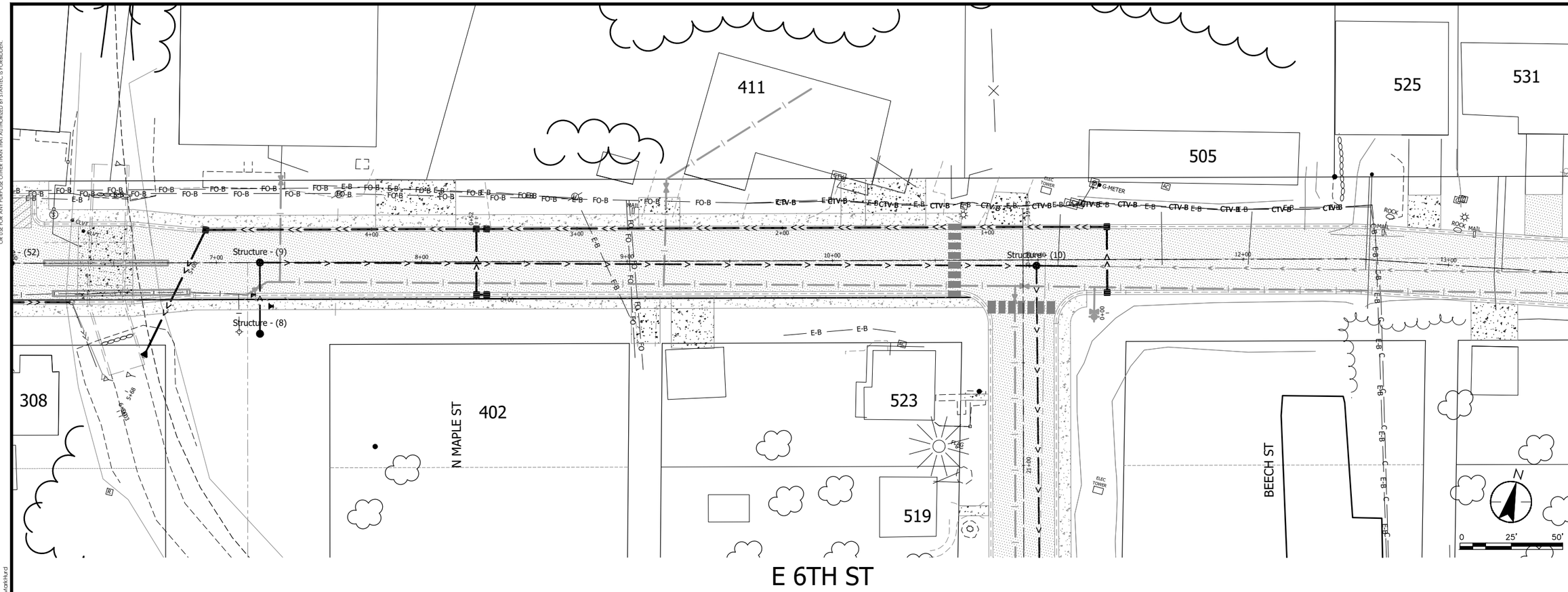

THE CONTRACTOR SHALL VERIFY AND BE RESPONSIBLE FOR ALL DIMENSIONS. DO NOT SCALE THE DRAWING - ANY ERRORS OR OMISSIONS SHALL BE REPORTED TO STANTEC WITHOUT DELAY. THE COPYRIGHTS TO ALL DESIGNS AND DRAWINGS ARE THE PROPERTY OF STANTEC. REPRODUCTION OR USE FOR ANY PURPOSE OTHER THAN THAT AUTHORIZED BY STANTEC IS FORBIDDEN.

Stantec
733 Marquette Avenue, Suite 1000
Minneapolis, MN 55402
www.stantec.com

I HEREBY CERTIFY THAT THIS PLAN, SPECIFICATION, OR REPORT WAS PREPARED BY ME OR UNDER MY DIRECT SUPERVISION AND THAT I AM A DULY LICENSED PROFESSIONAL ENGINEER UNDER THE LAWS OF THE STATE OF MINNESOTA.

PRINT NAME: ERIC S. LEMBKE

SIGNATURE:

DATE:

LIC. NO. 49748

PRELIMINARY 10%

CITY OF CHASKA, MINNESOTA

2022 DOWNTOWN RECONSTRUCTION
STORM SEWER IMPROVEMENTS
SIXTH STREET

NO	REVISION	DATE

SURVEY	PWR
DRAWN	BJ/BF/JP/PJW
DESIGNED	ESL
CHECKED	KPA
APPROVED	ESL
PROJ. NO.	193805454

SHEET NUMBER
C5.03.1

Date: 12/30/2022 - 8:36pm
User: eric.lembke@stantec.com
Name: J:\193805454\CAD\Civil\Sheets\193805454-C500.dwg
XREF: 193805454-B ORDER, 193805454-XXPL, 193805454-XXXT, 193805454-VIEWPORTS, 193805454-XSSS, 193805454-XSSTI, 193805454-XSNO, 193805454 - ADDRESS NUMBERS, 193805454-Model.xrd

THE CONTRACTOR SHALL VERIFY AND BE RESPONSIBLE FOR ALL DIMENSIONS. DO NOT SCALE THE DRAWING. ANY ERRORS OR OMISSIONS SHALL BE REPORTED TO STANTEC WITHOUT DELAY. THE COPYRIGHTS TO ALL DESIGNS AND DRAWINGS ARE THE PROPERTY OF STANTEC. REPRODUCTION OR USE FOR ANY PURPOSE OTHER THAN THAT AUTHORIZED BY STANTEC IS FORBIDDEN.

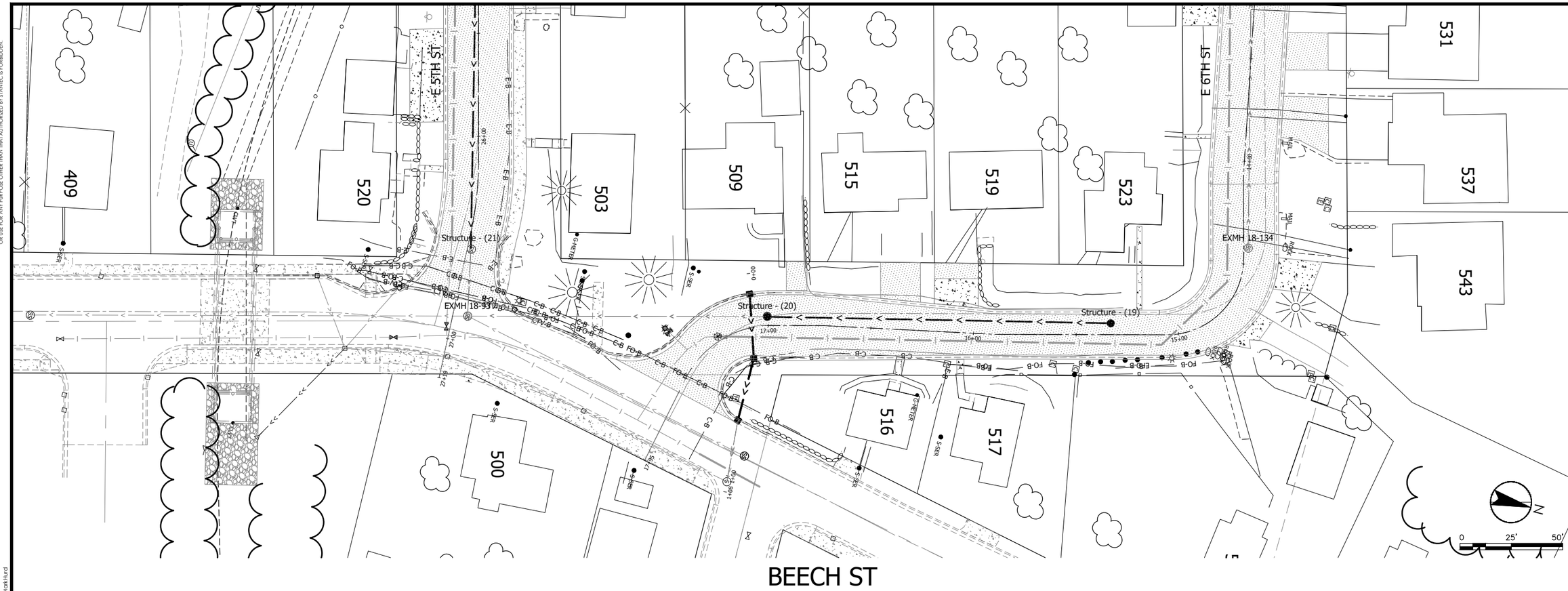

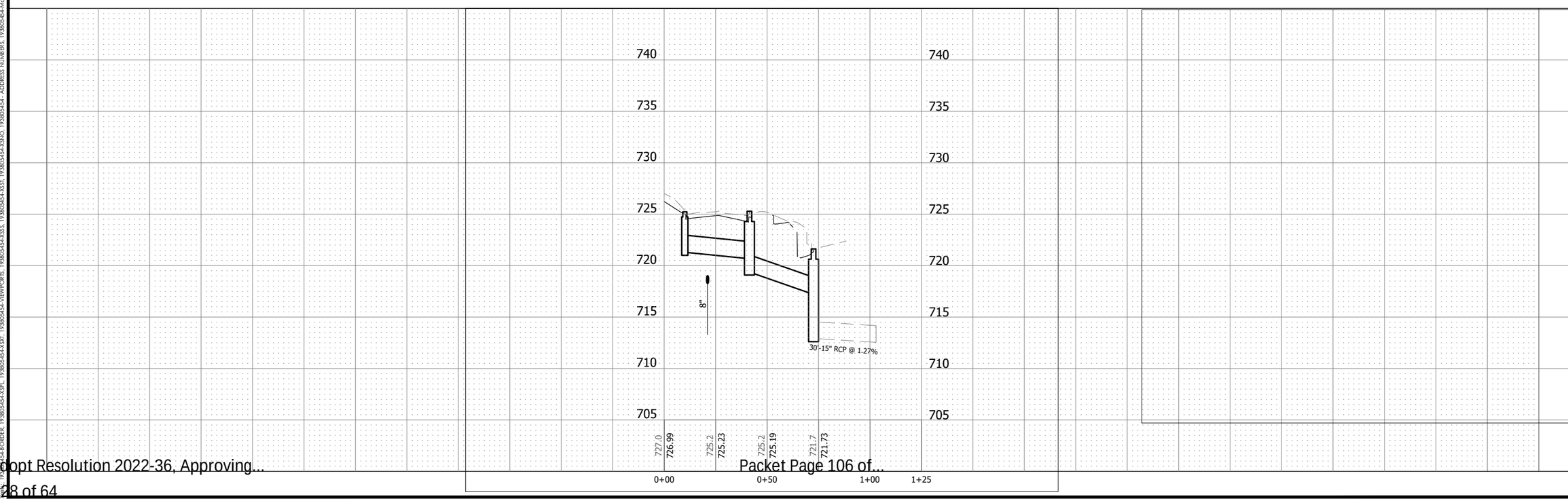

Stantec
733 Marquette Avenue, Suite 1000
Minneapolis, MN 55402
www.stantec.com

I HEREBY CERTIFY THAT THIS PLAN, SPECIFICATION, OR REPORT WAS PREPARED BY ME OR UNDER MY DIRECT SUPERVISION AND THAT I AM A DULY LICENSED PROFESSIONAL ENGINEER UNDER THE LAWS OF THE STATE OF MINNESOTA.

PRINT NAME: ERIC. S. LEMBKE

SIGNATURE: _____

DATE: _____ LIC. NO. 42748

PRELIMINARY 10%

CITY OF CHASKA, MINNESOTA

2022 DOWNTOWN RECONSTRUCTION

STORM SEWER IMPROVEMENTS

BEECH STREET

NO	REVISION	DATE

SURVEY	PWR
DRAWN	BJ/BF/JP/PJW
DESIGNED	ESL
CHECKED	KPA
APPROVED	ESL
PROJ. NO.	193805454

SHEET NUMBER

C5.04

Date: 9/30/2022 - 8:36pm
User: pjw
File: J:\193805454\Civil\Design\Sheets\C500.dwg
XREF: 193805454-B ORDER, 193805454-XXPL, 193805454-XXIT, 193805454-VIEWPORTS, 193805454-XSTS, 193805454-XSSS, 193805454-XSTI, 193805454-XSNO, 193805454 - ADDRESS NUMBERS, 193805454-MapHks.xrd

THE CONTRACTOR SHALL VERIFY AND BE RESPONSIBLE FOR ALL DIMENSIONS. DO NOT SCALE THE DRAWING - ANY ERRORS OR OMISSIONS SHALL BE REPORTED TO STANTEC WITHOUT DELAY. THE COPYRIGHTS TO ALL DESIGNS AND DRAWINGS ARE THE PROPERTY OF STANTEC. REPRODUCTION OR USE FOR ANY PURPOSE OTHER THAN THAT AUTHORIZED BY STANTEC IS FORBIDDEN.

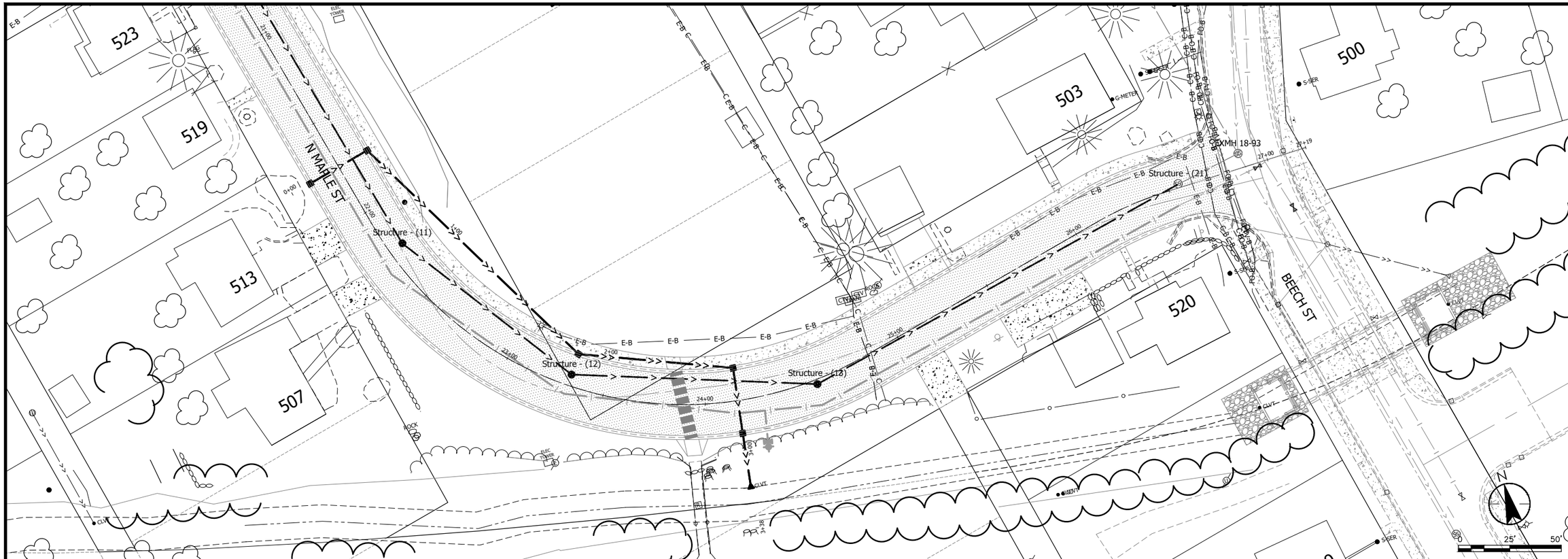

E 5TH ST AND MAPLE ST

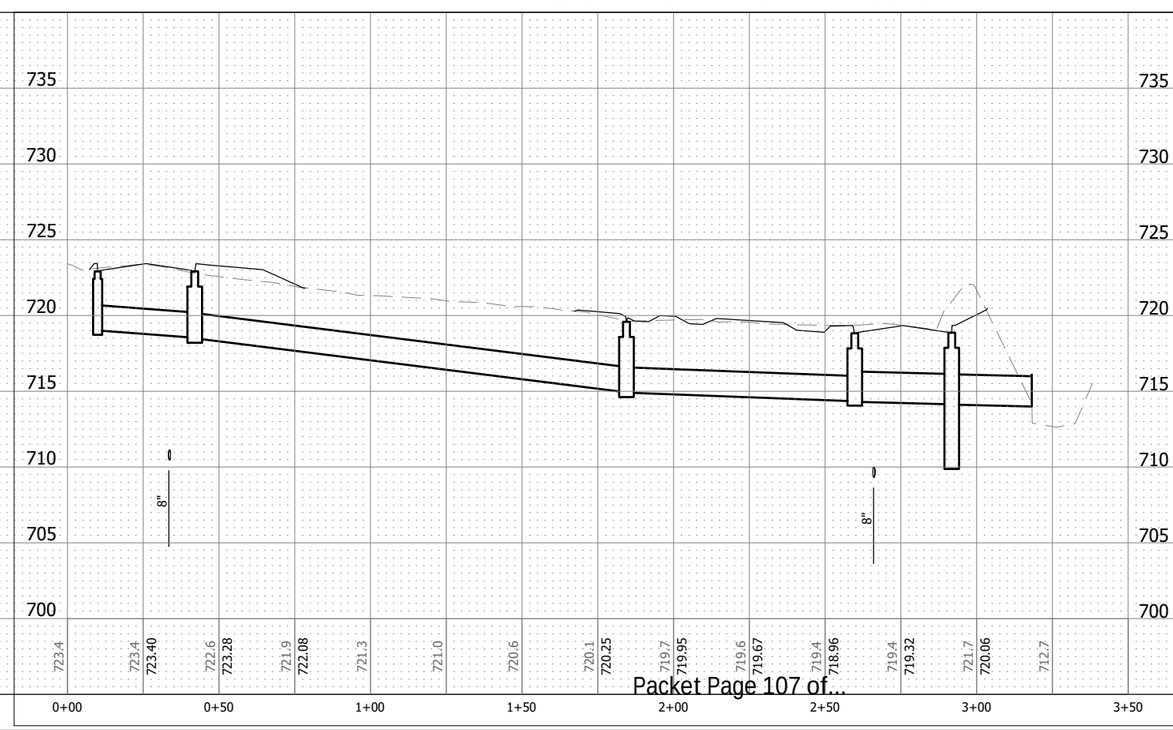

Stantec
733 Marquette Avenue, Suite 1000
Minneapolis, MN 55402
www.stantec.com

I HEREBY CERTIFY THAT THIS PLAN, SPECIFICATION, OR REPORT WAS PREPARED BY ME OR UNDER MY DIRECT SUPERVISION AND THAT I AM A DULY LICENSED PROFESSIONAL ENGINEER UNDER THE LAWS OF THE STATE OF MINNESOTA.

PRINT NAME: ERIC. S. LEMBKE
LIC. NO. 49748
SIGNATURE:
DATE:

PRELIMINARY 10%

CITY OF CHASKA, MINNESOTA
2022 DOWNTOWN RECONSTRUCTION
STORM SEWER IMPROVEMENTS
FIFTH & MAPLE STREET

NO	REVISION	DATE

SURVEY	PWR
DRAWN	BJ/BF/JP/PJW
DESIGNED	ESL
CHECKED	KPA
APPROVED	ESL
PROJ. NO.	193805454

SHEET NUMBER
C5.05

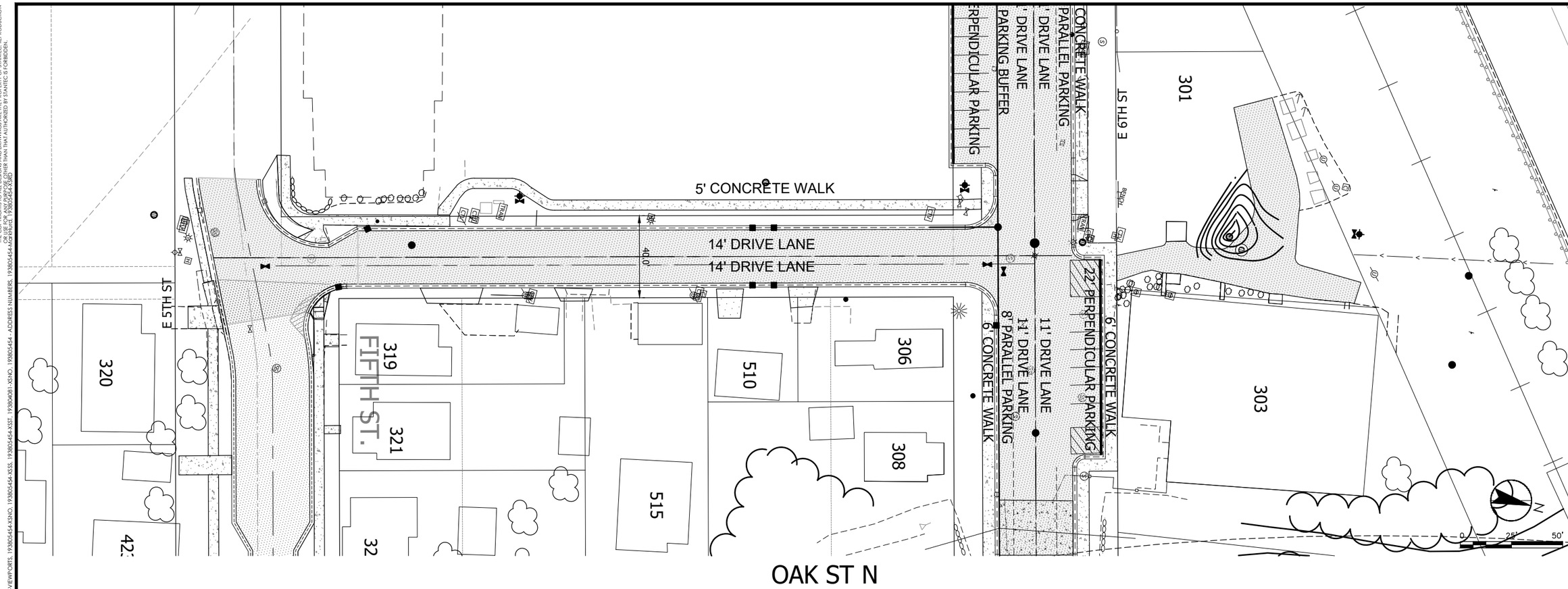

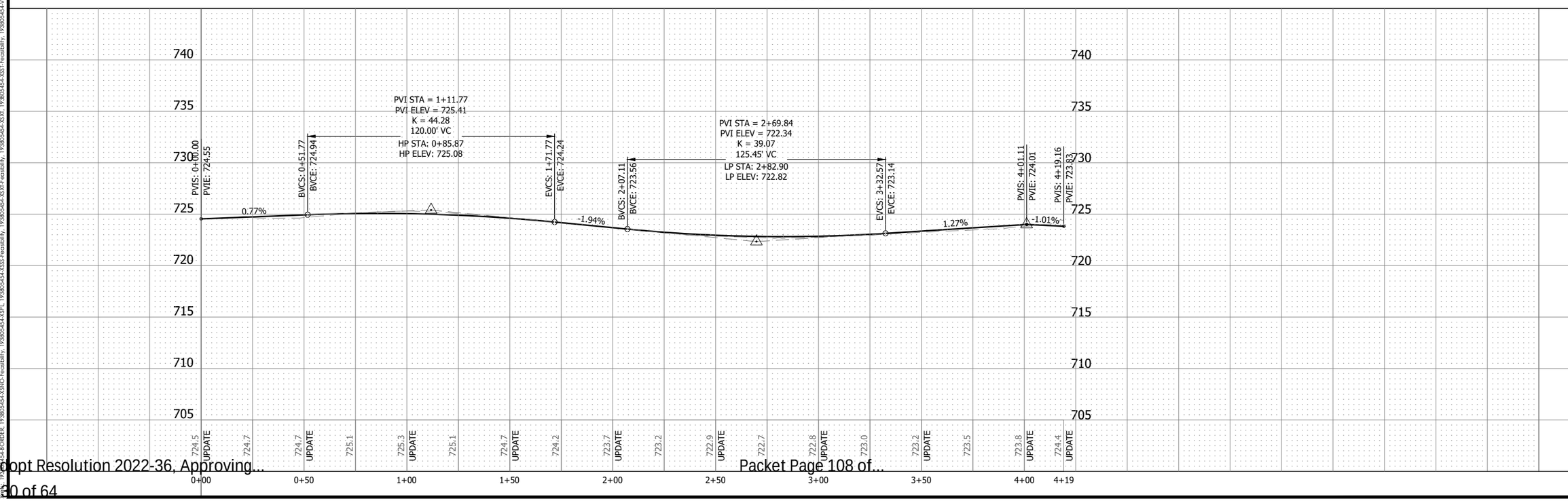

THE CONTRACTOR SHALL VERIFY AND BE RESPONSIBLE FOR ALL DIMENSIONS. DO NOT SCALE THE DRAWING - ANY ERRORS OR OMISSIONS SHALL BE REPORTED TO STANTEC WITHOUT DELAY. THE COPYRIGHTS TO ALL DESIGNS AND DRAWINGS ARE THE PROPERTY OF STANTEC. REPRODUCTION OR USE FOR ANY PURPOSE OTHER THAN THAT AUTHORIZED BY STANTEC IS FORBIDDEN.

Date: 12/30/2022 - 9:19pm
Cad File: T:\193805454\Office\01\dm\924101\193805454-C-600.dwg
Layout: 193805454-8-ORDER, 193805454-XSNO-Feasibility, 193805454-XJP1, 193805454-XSSS-Feasibility, 193805454-XSXT-Feasibility, 193805454-XSXT1-Feasibility, 193805454-XSXT, 193805454-VIEWPORTS, 193805454-XSNO, 193805454-XSNO, 193805454-XSSS, 193805454-XSST, 193804081-XSNO, 193805454 - ADDRESS NUMBERS

Stantec
733 Marquette Avenue, Suite 1000
Minneapolis, MN 55402
www.stantec.com

I HEREBY CERTIFY THAT THIS PLAN, SPECIFICATION, OR REPORT WAS PREPARED BY ME OR UNDER MY DIRECT SUPERVISION AND THAT I AM A DULY LICENSED PROFESSIONAL ENGINEER UNDER THE LAWS OF THE STATE OF MINNESOTA.

PRINT NAME: ERIC S. LEMBKE

SIGNATURE: _____

DATE: _____ LIC. NO. 42748

PRELIMINARY 10%

CITY OF CHASKA, MINNESOTA

2022 DOWNTOWN RECONSTRUCTION

STREET IMPROVEMENTS

OAK STREET

NO	REVISION	DATE

SURVEY	PWR
DRAWN	BJ/BF/JP/PJW
DESIGNED	ESL
CHECKED	KPA
APPROVED	ESL
PROJ. NO.	193805454

SHEET NUMBER
C6.01

THE CONTRACTOR SHALL VERIFY AND BE RESPONSIBLE FOR ALL DIMENSIONS. DO NOT SCALE THE DRAWING - ANY ERRORS OR OMISSIONS SHALL BE REPORTED TO STANTEC WITHOUT DELAY. THE COPYRIGHTS TO ALL DESIGNS AND DRAWINGS ARE THE PROPERTY OF STANTEC. REPRODUCTION OR USE FOR ANY PURPOSE OTHER THAN THAT AUTHORIZED BY STANTEC IS FORBIDDEN.

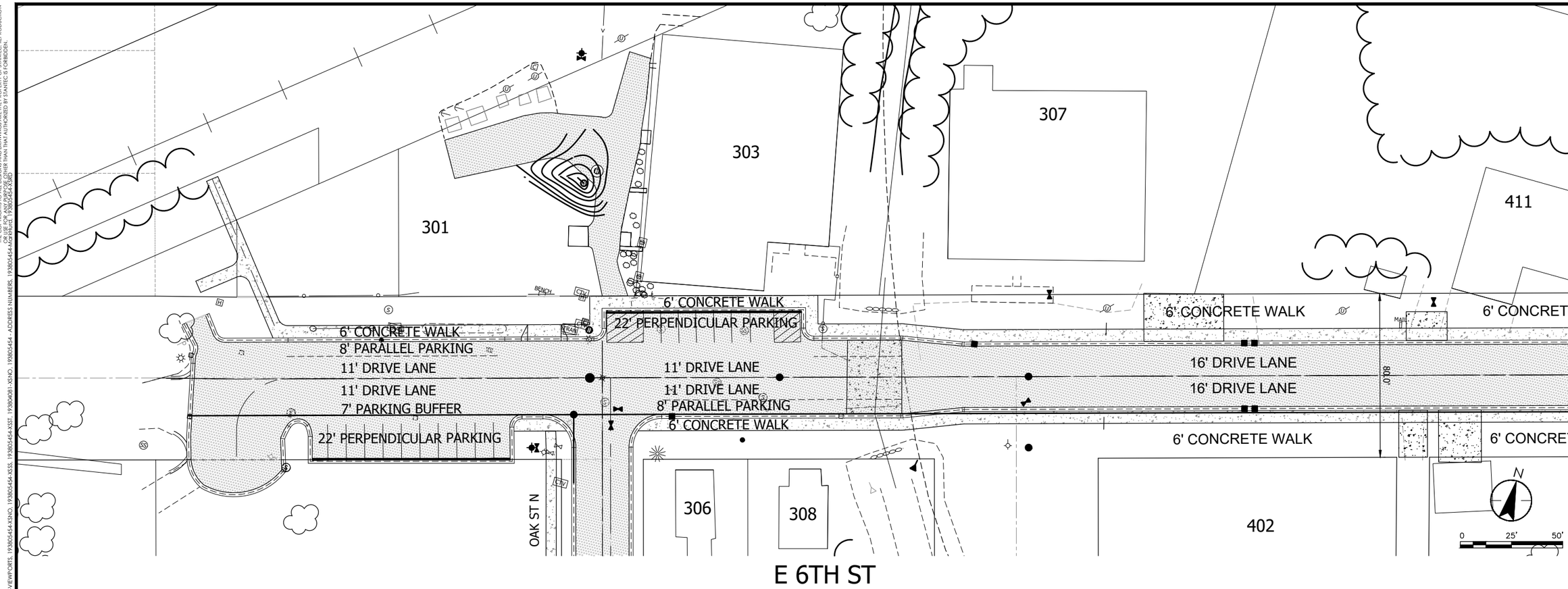

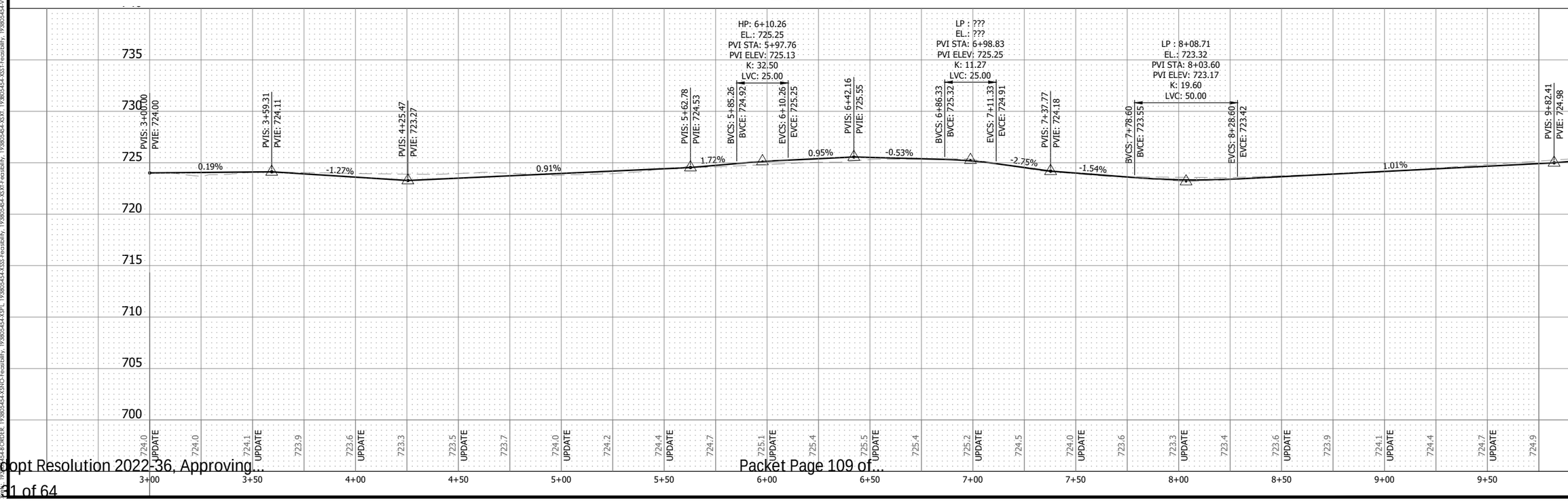

Stantec
733 Marquette Avenue, Suite 1000
Minneapolis, MN 55402
www.stantec.com

I HEREBY CERTIFY THAT THIS PLAN, SPECIFICATION, OR REPORT WAS PREPARED BY ME OR UNDER MY DIRECT SUPERVISION AND THAT I AM A DULY LICENSED PROFESSIONAL ENGINEER UNDER THE LAWS OF THE STATE OF MINNESOTA.

PRINT NAME: ERIC S. LEMBKE

SIGNATURE:

DATE:

LIC. NO. 42748

PRELIMINARY 10%

CITY OF CHASKA, MINNESOTA

2022 DOWNTOWN RECONSTRUCTION

STREET IMPROVEMENTS

SIXTH STREET

NO	REVISION	DATE

SURVEY	PWR
DRAWN	BJ/BF/JP/PJW
DESIGNED	ESL
CHECKED	KPA
APPROVED	ESL
PROJ. NO.	193805454

SHEET NUMBER

C6.02

THE CONTRACTOR SHALL VERIFY AND BE RESPONSIBLE FOR ALL DIMENSIONS. DO NOT SCALE THE DRAWING. ALL DESIGNS, DRAWINGS AND SPECIFICATIONS ARE THE PROPERTY AND SHALL REMAIN THE COPYRIGHTS TO ALL DESIGNS AND DRAWINGS ARE THE PROPERTY OF STANTEC. REPRODUCTION OR USE FOR ANY PURPOSE OTHER THAN THAT AUTHORIZED BY STANTEC IS FORBIDDEN.

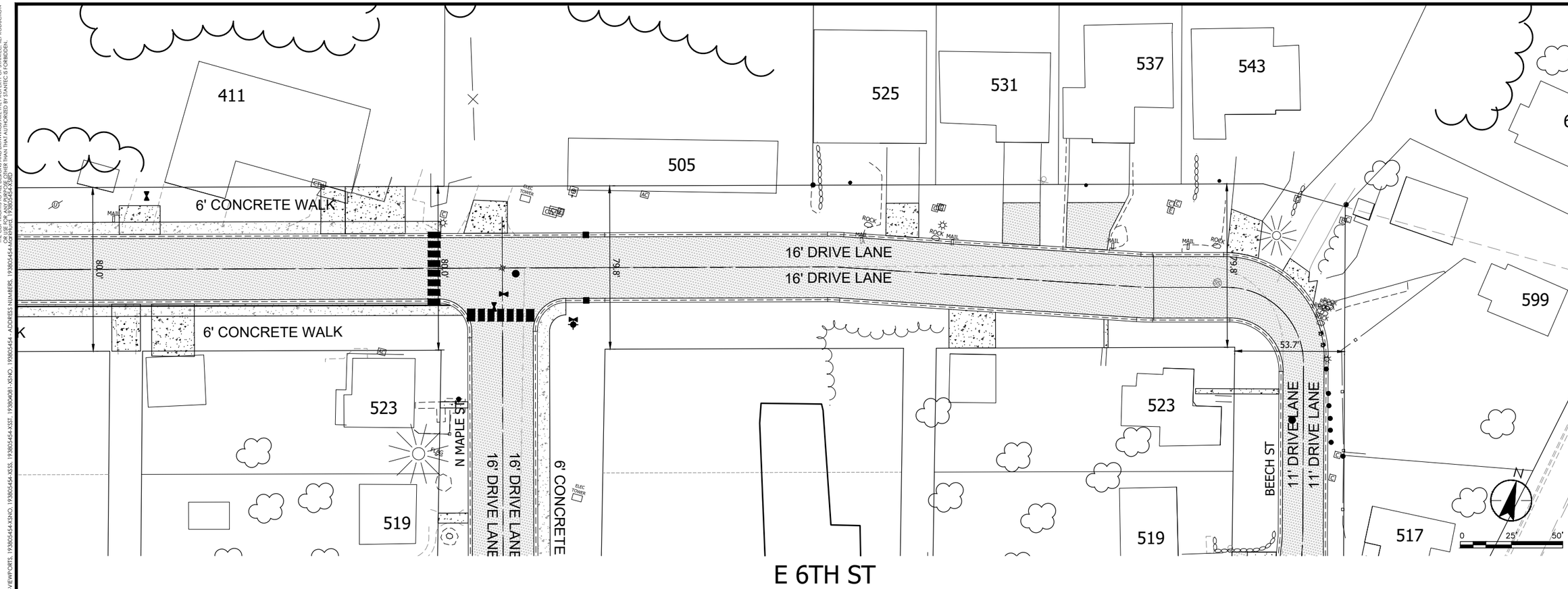

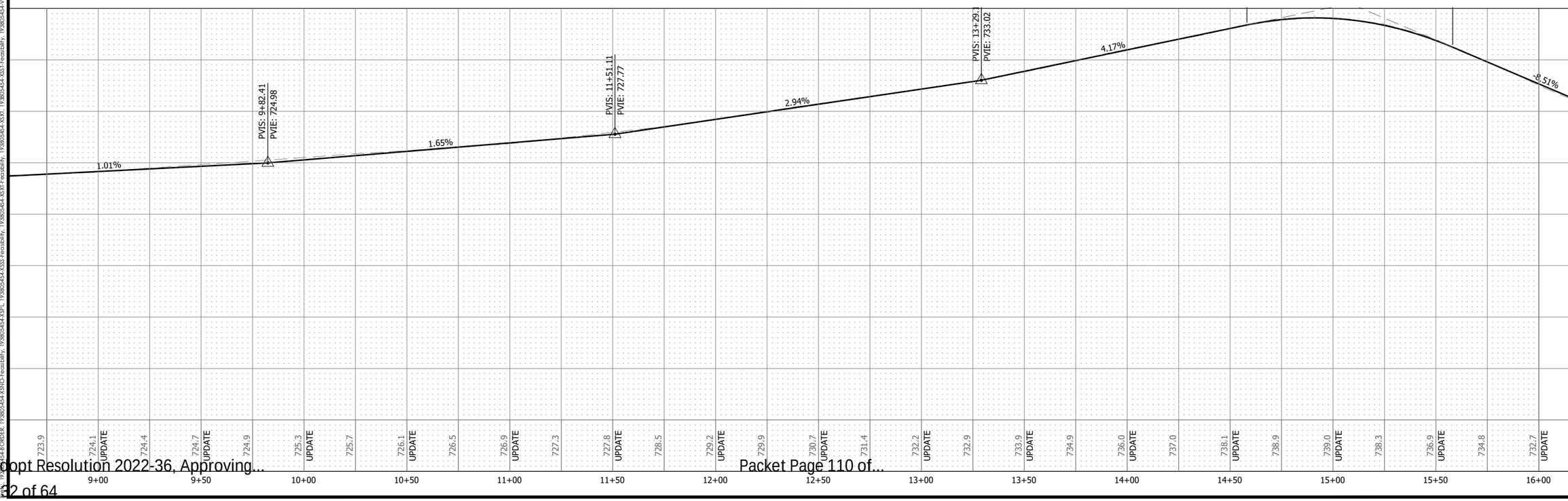

Stantec
733 Marquette Avenue, Suite 1000
Minneapolis, MN 55402
www.stantec.com

I HEREBY CERTIFY THAT THIS PLAN, SPECIFICATION, OR REPORT WAS PREPARED BY ME OR UNDER MY DIRECT SUPERVISION AND THAT I AM A DULY LICENSED PROFESSIONAL ENGINEER UNDER THE LAWS OF THE STATE OF MINNESOTA.

PRINT NAME: ERIC S. LEMBKE

SIGNATURE:

DATE:

LIC. NO. 42748

PRELIMINARY 10%

CITY OF CHASKA, MINNESOTA

2022 DOWNTOWN RECONSTRUCTION

STREET IMPROVEMENTS

SIXTH STREET

NO	REVISION	DATE

SURVEY	PWR
DRAWN	BJ/BF/JP/PJW
DESIGNED	ESL
CHECKED	KPA
APPROVED	ESL
PROJ. NO.	193805454

SHEET NUMBER

C6.03

THE CONTRACTOR SHALL VERIFY AND BE RESPONSIBLE FOR ALL DIMENSIONS. DO NOT SCALE THE DRAWING - ANY ERRORS OR OMISSIONS SHALL BE REPORTED TO STANTEC WITHOUT DELAY. THE COPYRIGHTS TO ALL DESIGNS AND DRAWINGS ARE THE PROPERTY OF STANTEC. REPRODUCTION OR USE FOR ANY PURPOSE OTHER THAN THAT AUTHORIZED BY STANTEC IS FORBIDDEN.

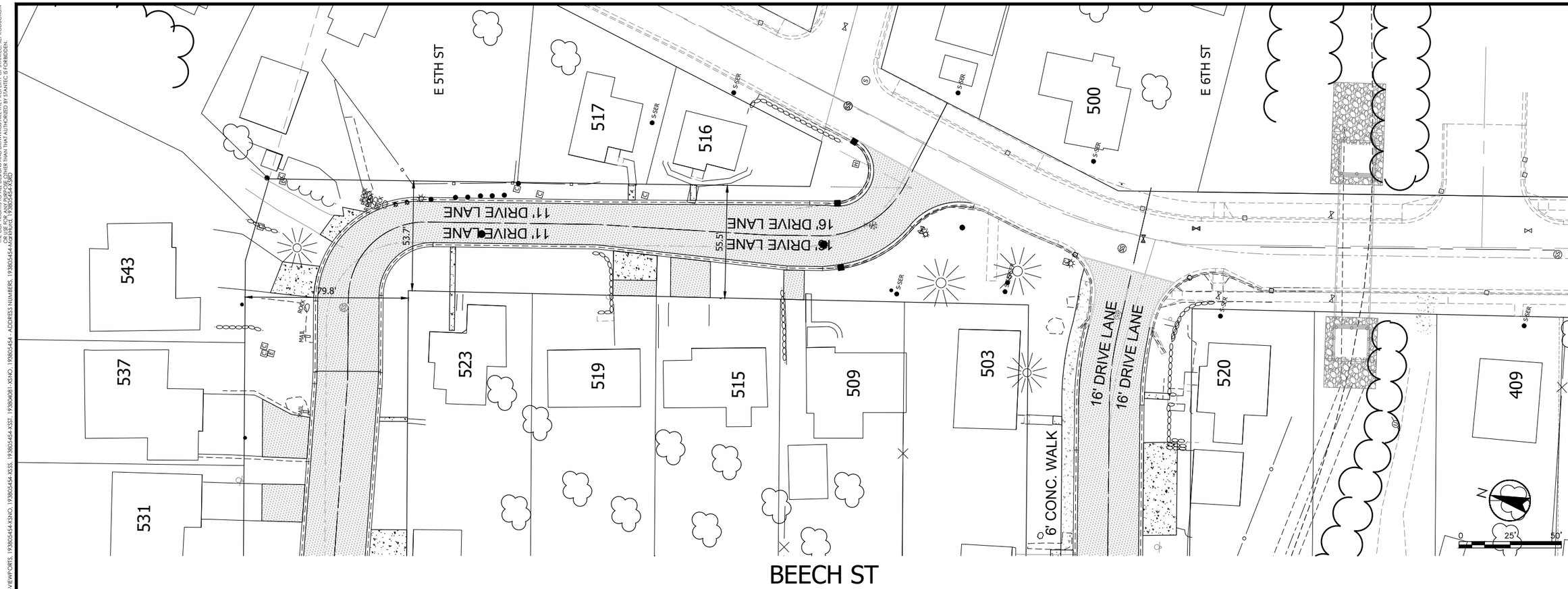

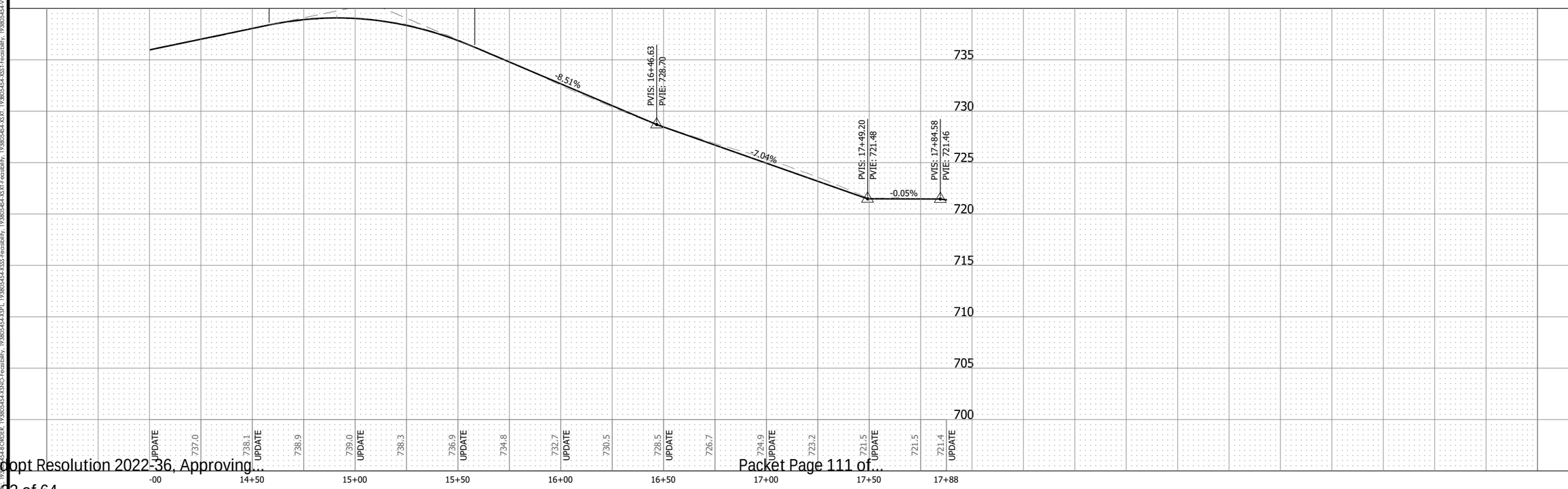

Stantec
733 Marquette Avenue, Suite 1000
Minneapolis, MN 55402
www.stantec.com

I HEREBY CERTIFY THAT THIS PLAN, SPECIFICATION, OR REPORT WAS PREPARED BY ME OR UNDER MY DIRECT SUPERVISION AND THAT I AM A DULY LICENSED PROFESSIONAL ENGINEER UNDER THE LAWS OF THE STATE OF MINNESOTA.

PRINT NAME: ERIC. S. LEMBKE

SIGNATURE: _____ LIC. NO. 42748

DATE: _____

PRELIMINARY 10%

CITY OF CHASKA, MINNESOTA

2022 DOWNTOWN RECONSTRUCTION

STREET IMPROVEMENTS

BEECH STREET

NO	REVISION	DATE

SURVEY	PWR
DRAWN	BJ/BF/JP/PJW
DESIGNED	ESL
CHECKED	KPA
APPROVED	ESL
PROJ. NO.	193805454

SHEET NUMBER
C6.04

THE CONTRACTOR SHALL VERIFY AND BE RESPONSIBLE FOR ALL DIMENSIONS. DO NOT SCALE THE DRAWING. ANY ERRORS OR OMISSIONS SHALL BE REPORTED TO STANTEC WITHOUT DELAY. THE COPYRIGHTS TO ALL DESIGNS AND DRAWINGS ARE THE PROPERTY OF STANTEC. REPRODUCTION OR USE FOR ANY PURPOSE OTHER THAN THAT AUTHORIZED BY STANTEC IS FORBIDDEN.

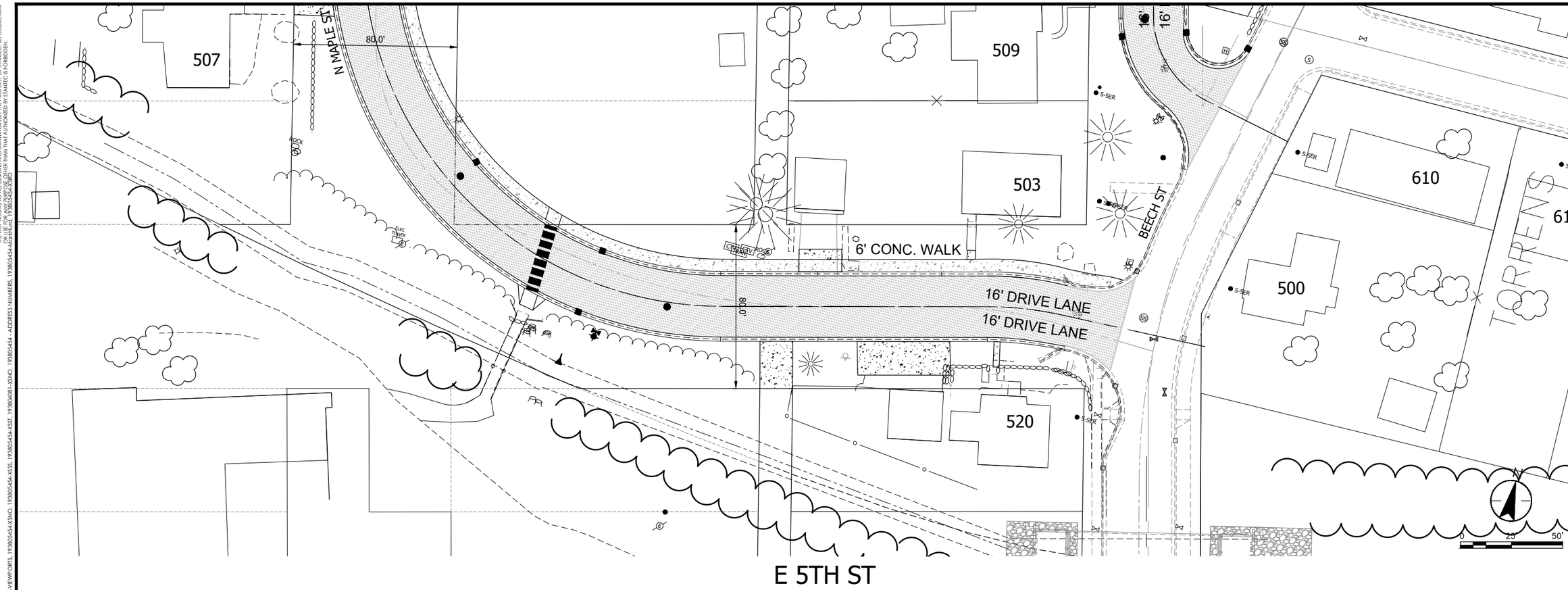

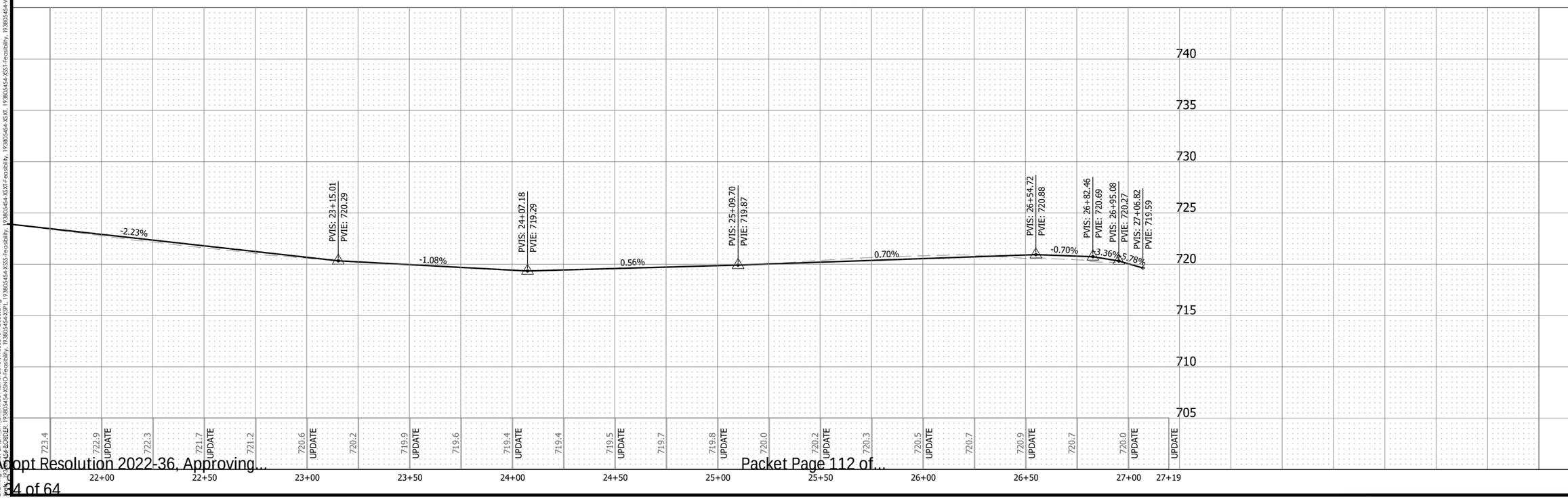

Stantec
733 Marquette Avenue, Suite 1000
Minneapolis, MN 55402
www.stantec.com

I HEREBY CERTIFY THAT THIS PLAN, SPECIFICATION, OR REPORT WAS PREPARED BY ME OR UNDER MY DIRECT SUPERVISION AND THAT I AM A DULY LICENSED PROFESSIONAL ENGINEER UNDER THE LAWS OF THE STATE OF MINNESOTA.

PRINT NAME: ERIC S. LEMBKE

SIGNATURE: _____ LIC. NO. 42748

DATE: _____

PRELIMINARY 10%

CITY OF CHASKA, MINNESOTA

2022 DOWNTOWN RECONSTRUCTION

STREET IMPROVEMENTS

FIFTH STREET

NO	REVISION	DATE

SURVEY	PWR
DRAWN	BJ/BF/JP/PJW
DESIGNED	ESL
CHECKED	KPA
APPROVED	ESL
PROJ. NO.	193805454

SHEET NUMBER

C6.05

THE CONTRACTOR SHALL VERIFY AND BE RESPONSIBLE FOR ALL DIMENSIONS. DO NOT SCALE THE DRAWING. ANY ERRORS OR OMISSIONS SHALL BE REPORTED TO STANTEC WITHOUT DELAY. THE COPYRIGHTS TO ALL DESIGNS AND DRAWINGS ARE THE PROPERTY OF STANTEC. REPRODUCTION OR USE FOR ANY PURPOSE OTHER THAN THAT AUTHORIZED BY STANTEC IS FORBIDDEN.
PLOT DATE: 9/30/2022 - 9:21 pm

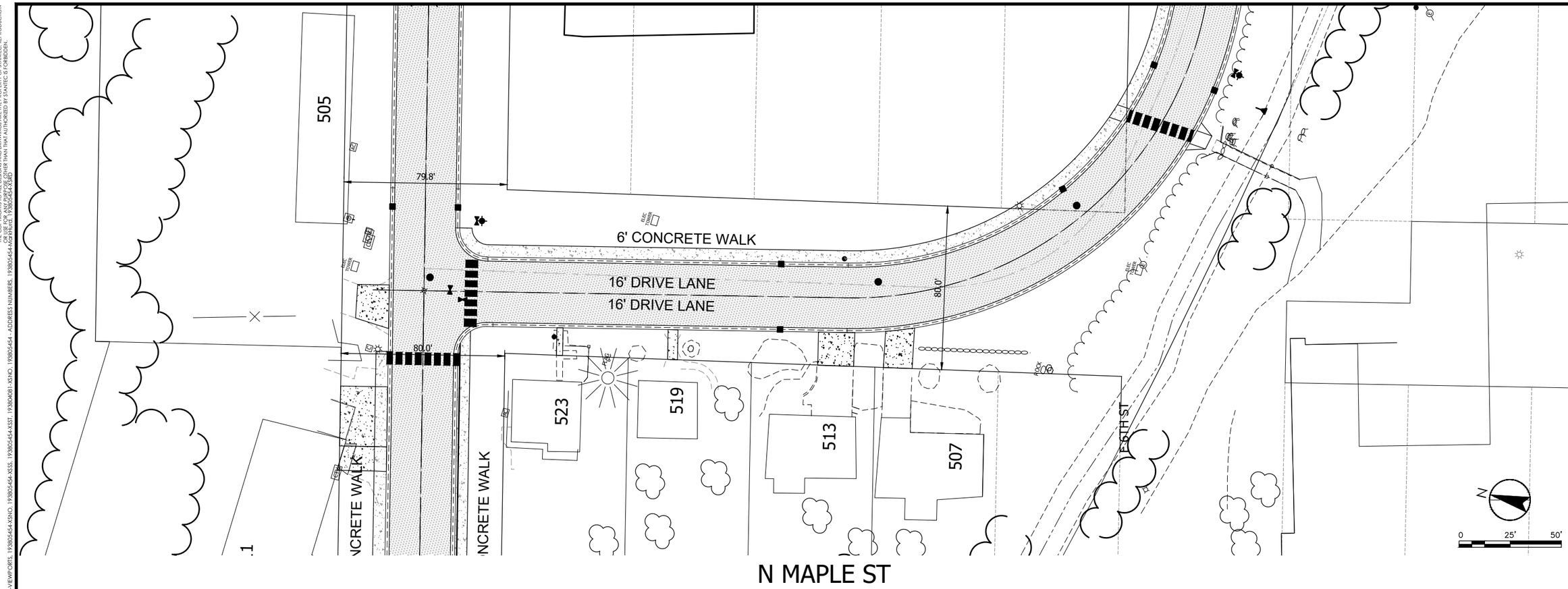

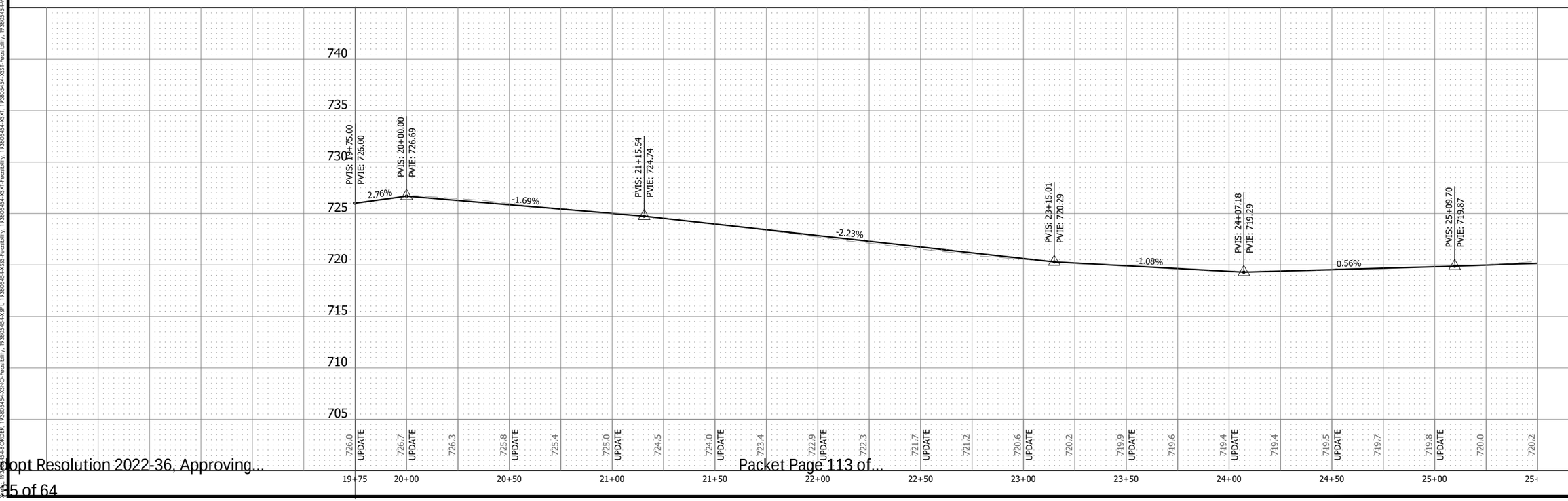

Stantec
733 Marquette Avenue, Suite 1000
Minneapolis, MN 55402
www.stantec.com

I HEREBY CERTIFY THAT THIS PLAN, SPECIFICATION, OR REPORT WAS PREPARED BY ME OR UNDER MY DIRECT SUPERVISION AND THAT I AM A DULY LICENSED PROFESSIONAL ENGINEER UNDER THE LAWS OF THE STATE OF MINNESOTA.

PRINT NAME: ERIC S. LEMBKE

SIGNATURE: _____

DATE: _____ LIC. NO. 42748

PRELIMINARY 10%

CITY OF CHASKA, MINNESOTA

2022 DOWNTOWN RECONSTRUCTION

STREET IMPROVEMENTS

MAPLE STREET

NO	REVISION	DATE

SURVEY	PWR
DRAWN	BJ/BF/JP/PJW
DESIGNED	ESL
CHECKED	KPA
APPROVED	ESL
PROJ. NO.	193805454

SHEET NUMBER
C6.06

THE CONTRACTOR SHALL VERIFY AND BE RESPONSIBLE FOR ALL DIMENSIONS. DO NOT SCALE THE DRAWING - ANY ERRORS OR OMISSIONS SHALL BE REPORTED TO STANTEC WITHOUT DELAY. THE COPYRIGHTS TO ALL DESIGNS AND DRAWINGS ARE THE PROPERTY OF STANTEC. REPRODUCTION OR USE FOR ANY PURPOSE OTHER THAN THAT AUTHORIZED BY STANTEC IS FORBIDDEN.

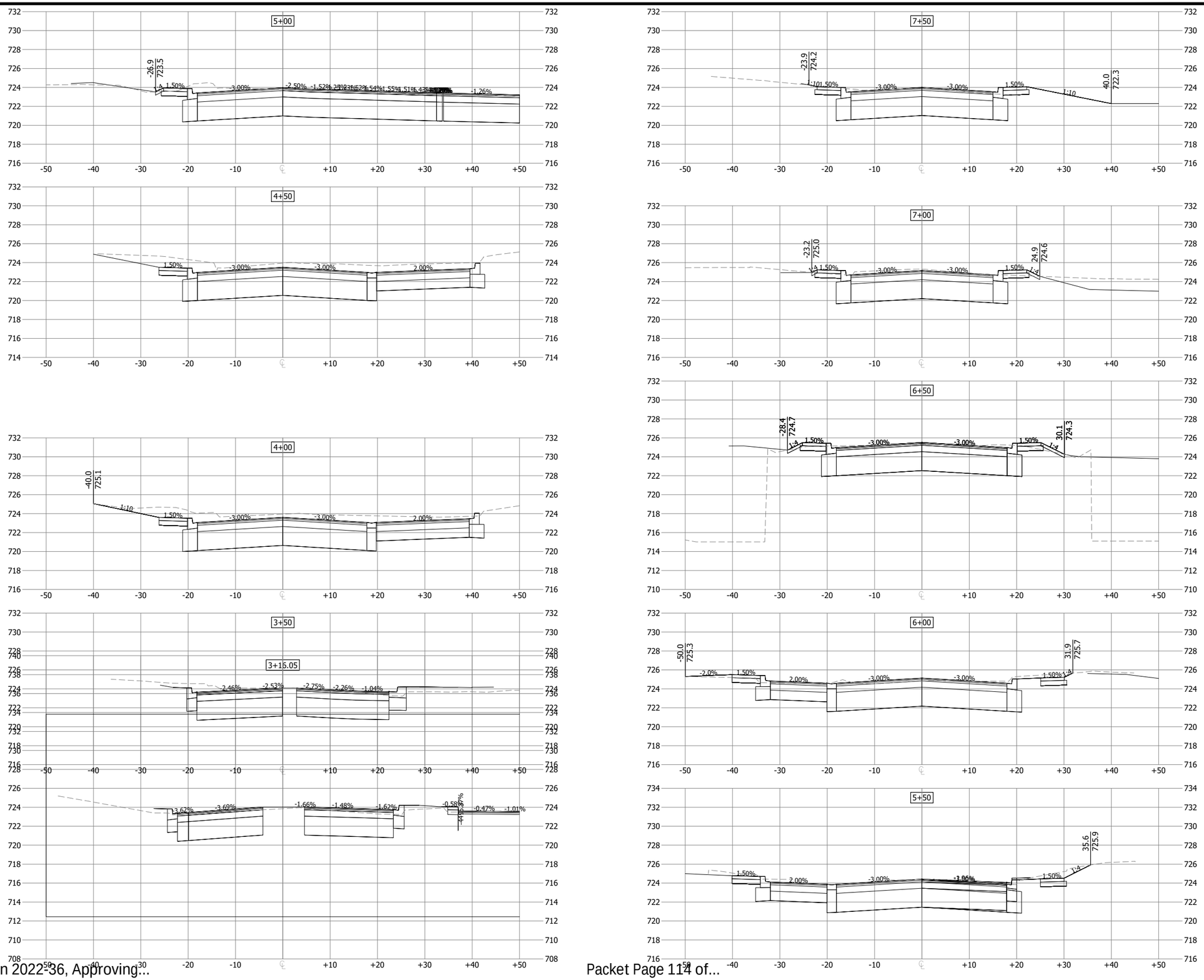

Stantec
733 Marquette Avenue, Suite 1000
Minneapolis, MN 55402
www.stantec.com

I HEREBY CERTIFY THAT THIS PLAN, SPECIFICATION, OR REPORT WAS PREPARED BY ME OR UNDER MY DIRECT SUPERVISION AND THAT I AM A DULY LICENSED PROFESSIONAL ENGINEER UNDER THE LAWS OF THE STATE OF MINNESOTA.

PRINT NAME: ERIC S. LEMBKE

SIGNATURE: _____ LIC. NO. 42748

DATE: _____

PRELIMINARY 10%

CITY OF CHASKA, MINNESOTA

2022 DOWNTOWN RECONSTRUCTION

CROSS SECTIONS

6TH AND BEECH STREET

NO	REVISION	DATE

SURVEY	PWR
DRAWN	BJ/BF/JP/PJW
DESIGNED	ESL
CHECKED	KPA
APPROVED	ESL
PROJ. NO.	193805454

SHEET NUMBER

C701

THE CONTRACTOR SHALL VERIFY AND BE RESPONSIBLE FOR ALL DIMENSIONS. DO NOT SCALE THE DRAWING - ANY ERRORS OR OMISSIONS SHALL BE REPORTED TO STANTEC WITHOUT DELAY. THE COPYRIGHTS TO ALL DESIGNS AND DRAWINGS ARE THE PROPERTY OF STANTEC. REPRODUCTION OR USE FOR ANY PURPOSE OTHER THAN THAT AUTHORIZED BY STANTEC IS FORBIDDEN.

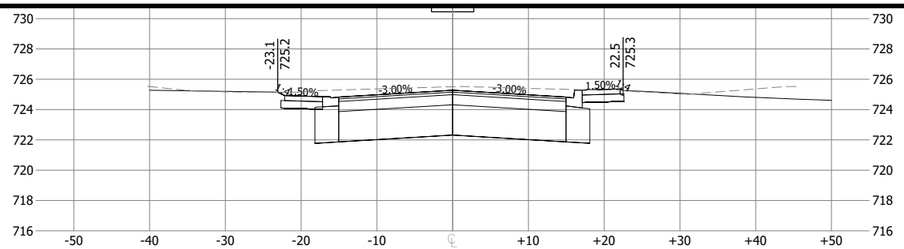

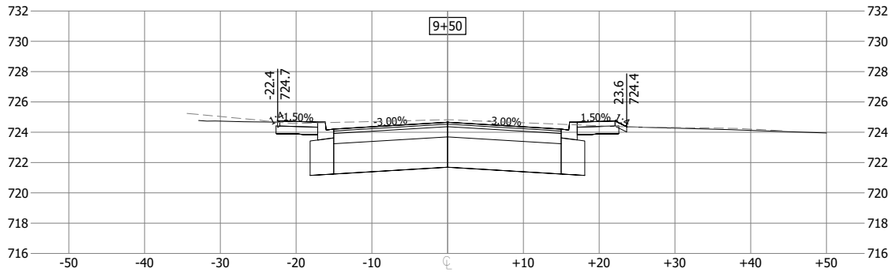

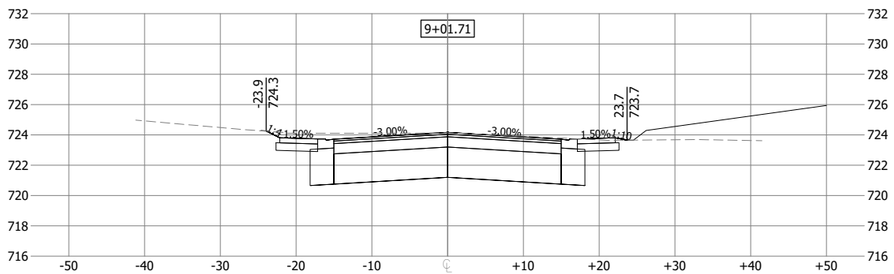

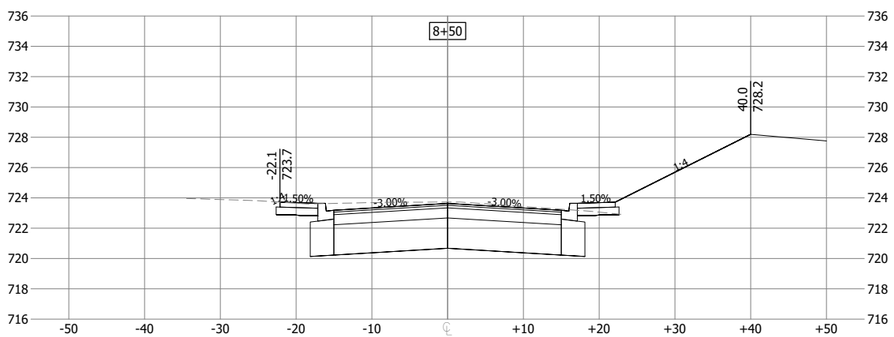

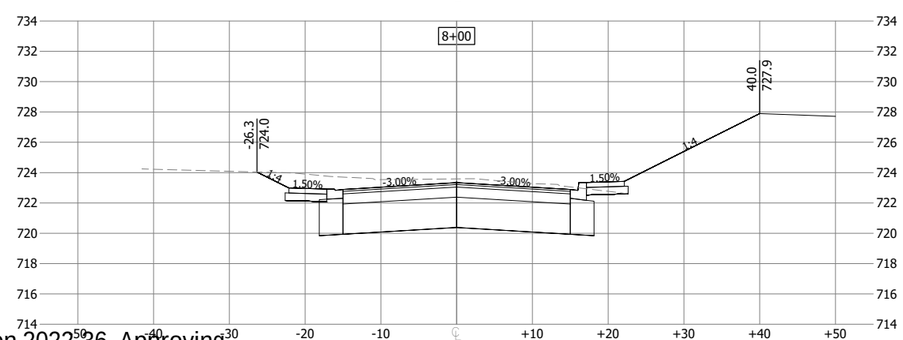

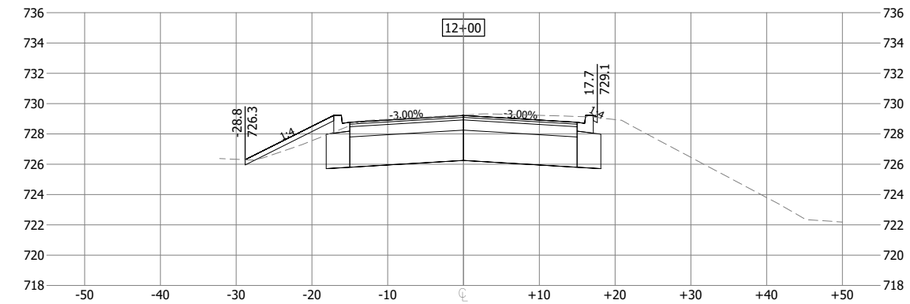

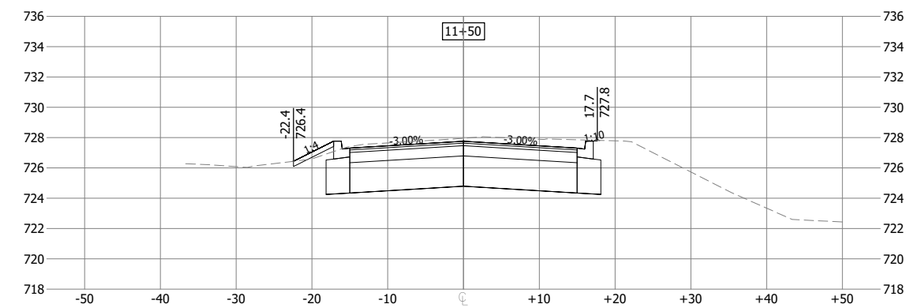

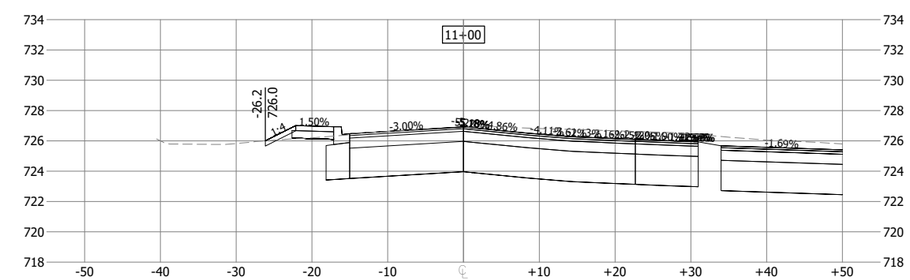

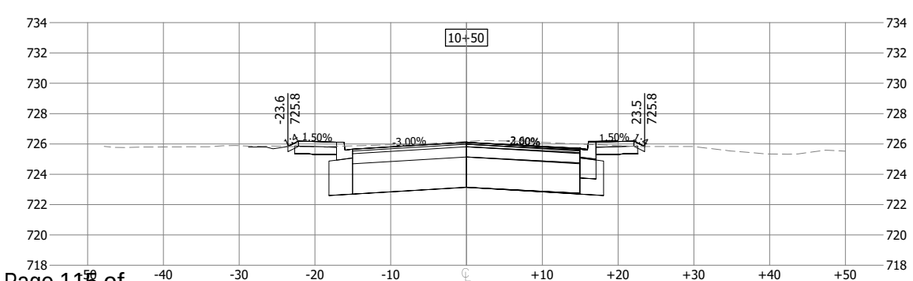

Stantec
733 Marquette Avenue, Suite 1000
Minneapolis, MN 55402
www.stantec.com

I HEREBY CERTIFY THAT THIS PLAN, SPECIFICATION, OR REPORT WAS PREPARED BY ME OR UNDER MY DIRECT SUPERVISION AND THAT I AM A DULY LICENSED PROFESSIONAL ENGINEER UNDER THE LAWS OF THE STATE OF MINNESOTA.

PRINT NAME: ERIC S. LEMBKE

SIGNATURE:

DATE:

LIC. NO. 42748

PRELIMINARY 10%

CITY OF CHASKA, MINNESOTA
2022 DOWNTOWN RECONSTRUCTION
CROSS SECTIONS
6TH AND BEECH STREET

NO	REVISION	DATE

SURVEY	PWR
DRAWN	BJ/BF/JP/PJW
DESIGNED	ESL
CHECKED	KPA
APPROVED	ESL
PROJ. NO.	193805454

SHEET NUMBER
C702

THE CONTRACTOR SHALL VERIFY AND BE RESPONSIBLE FOR ALL DIMENSIONS. DO NOT SCALE THE DRAWING - ANY ERRORS OR OMISSIONS SHALL BE REPORTED TO STANTEC WITHOUT DELAY. THE COPYRIGHTS TO ALL DESIGNS AND DRAWINGS ARE THE PROPERTY OF STANTEC. REPRODUCTION OR USE FOR ANY PURPOSE OTHER THAN THAT AUTHORIZED BY STANTEC IS FORBIDDEN.

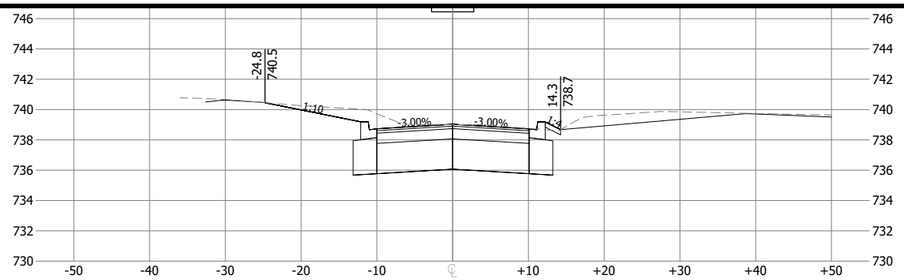

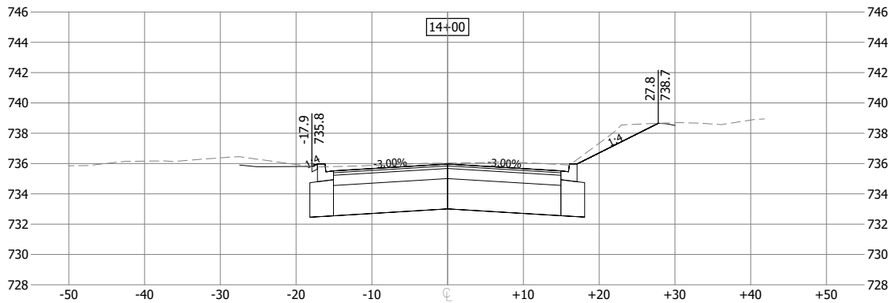

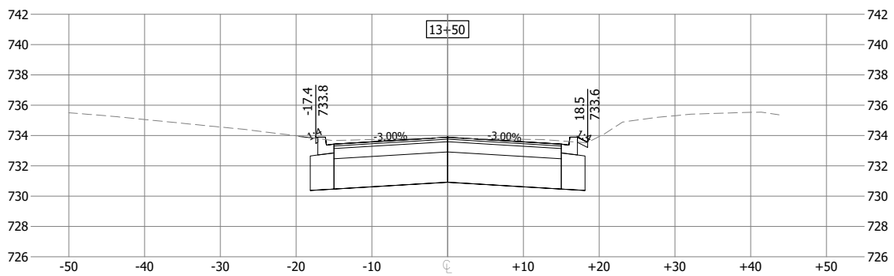

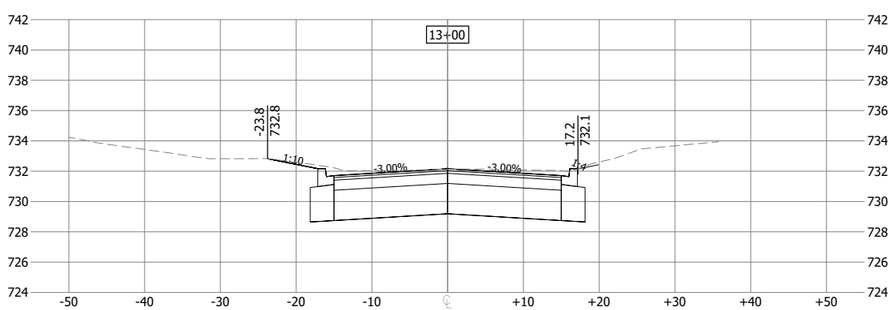

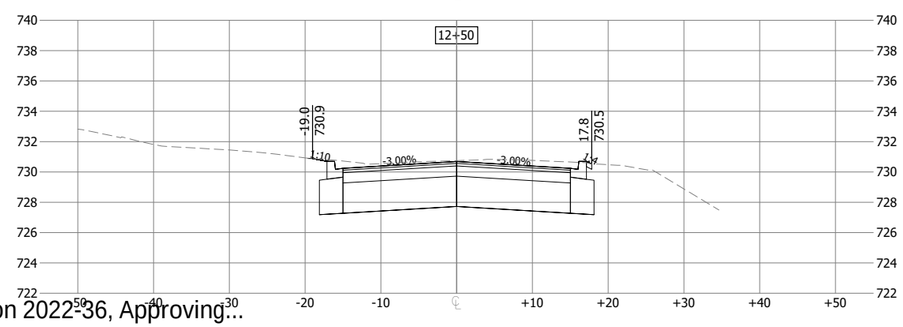

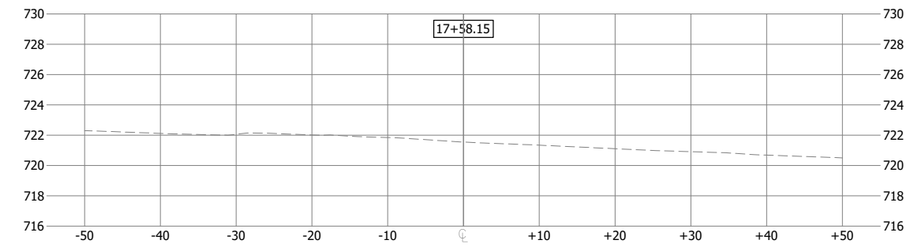

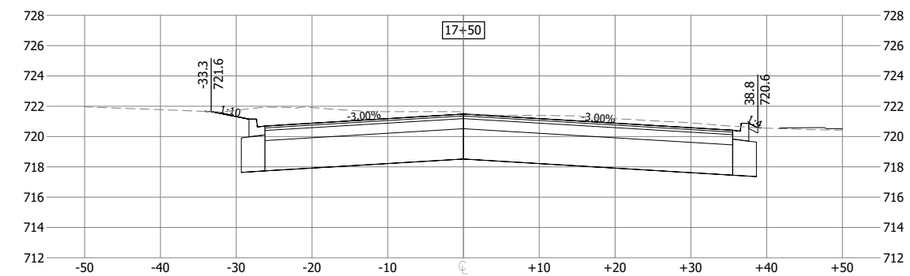

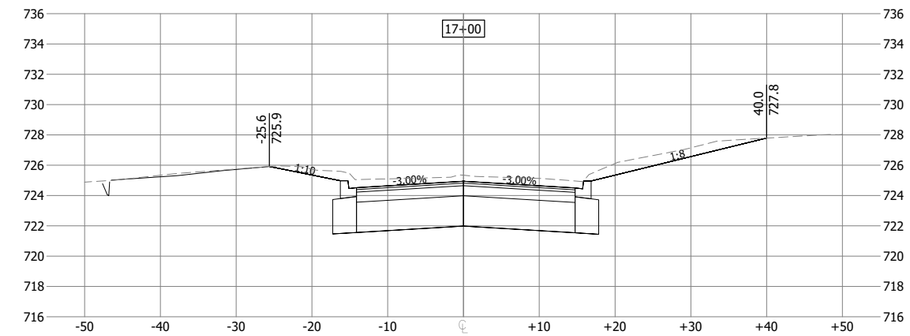

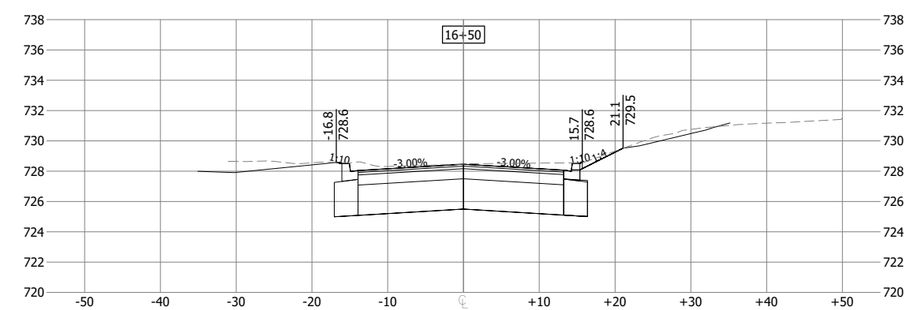

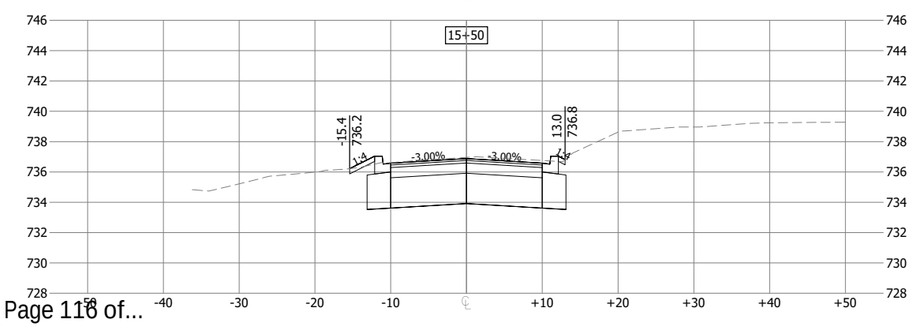

Stantec
733 Marquette Avenue, Suite 1000
Minneapolis, MN 55402
www.stantec.com

I HEREBY CERTIFY THAT THIS PLAN, SPECIFICATION, OR REPORT WAS PREPARED BY ME OR UNDER MY DIRECT SUPERVISION AND THAT I AM A DULY LICENSED PROFESSIONAL ENGINEER UNDER THE LAWS OF THE STATE OF MINNESOTA.

PRINT NAME: ERIC S. LEMBKE

SIGNATURE: _____ LIC. NO. 49748

DATE: _____

PRELIMINARY 10%

CITY OF CHASKA, MINNESOTA

2022 DOWNTOWN RECONSTRUCTION

CROSS SECTIONS

6TH AND BEECH STREET

NO	REVISION	DATE

SURVEY	PWR
DRAWN	BJ/BF/JP/PJW
DESIGNED	ESL
CHECKED	KPA
APPROVED	ESL
PROJ. NO.	193805454

SHEET NUMBER

C703

THE CONTRACTOR SHALL VERIFY AND BE RESPONSIBLE FOR ALL DIMENSIONS. DO NOT SCALE THE DRAWING - ANY ERRORS OR OMISSIONS SHALL BE REPORTED TO STANTEC WITHOUT DELAY. THE COPYRIGHTS TO ALL DESIGNS AND DRAWINGS ARE THE PROPERTY OF STANTEC. REPRODUCTION OR USE FOR ANY PURPOSE OTHER THAN THAT AUTHORIZED BY STANTEC IS FORBIDDEN.

Date: 2/10/2022 - 9:23pm
Drawing: J:\193805454\Civil\Info01\dwg\92610\193805454-C700.dwg
Layout: C704 Xref's: Info01\XREF\BORDER
Plot Scale: 1:1 Plot Date: 2/10/2022 - 9:23pm
Plot By: Jeffrey.Pederson@stantec.com
Login: PEDERJ
Project: J:\193805454\XSNO_193805454-BORDER

Stantec
733 Marquette Avenue, Suite 1000
Minneapolis, MN 55402
www.stantec.com

I HEREBY CERTIFY THAT THIS PLAN, SPECIFICATION, OR REPORT WAS PREPARED BY ME OR UNDER MY DIRECT SUPERVISION AND THAT I AM A DULY LICENSED PROFESSIONAL ENGINEER UNDER THE LAWS OF THE STATE OF MINNESOTA.

PRINT NAME: ERIC S. LEMBKE

SIGNATURE: _____

DATE: _____ LIC. NO. 42748

PRELIMINARY 10%

CITY OF CHASKA, MINNESOTA

2022 DOWNTOWN RECONSTRUCTION

CROSS SECTIONS

6TH AND BEECH STREET

NO	REVISION	DATE

SURVEY	PWR
DRAWN	BJ/BF/JP/PJW
DESIGNED	ESL
CHECKED	KPA
APPROVED	ESL
PROJ. NO.	193805454

SHEET NUMBER
C704

THE CONTRACTOR SHALL VERIFY AND BE RESPONSIBLE FOR ALL DIMENSIONS. DO NOT SCALE THE DRAWING - ANY ERRORS OR OMISSIONS SHALL BE REPORTED TO STANTEC WITHOUT DELAY. THE COPYRIGHTS TO ALL DESIGNS AND DRAWINGS ARE THE PROPERTY OF STANTEC. REPRODUCTION OR USE FOR ANY PURPOSE OTHER THAN THAT AUTHORIZED BY STANTEC IS FORBIDDEN.

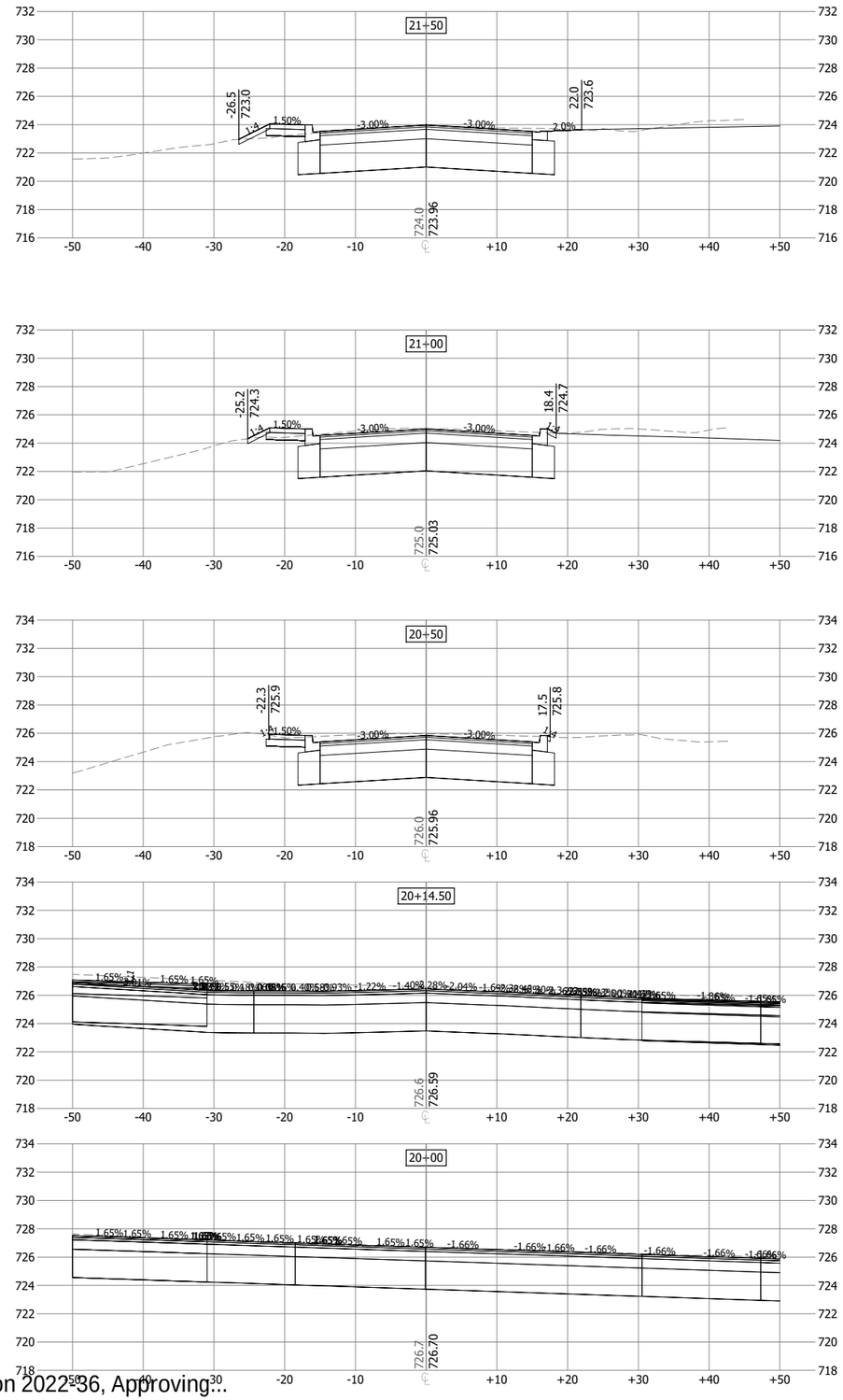

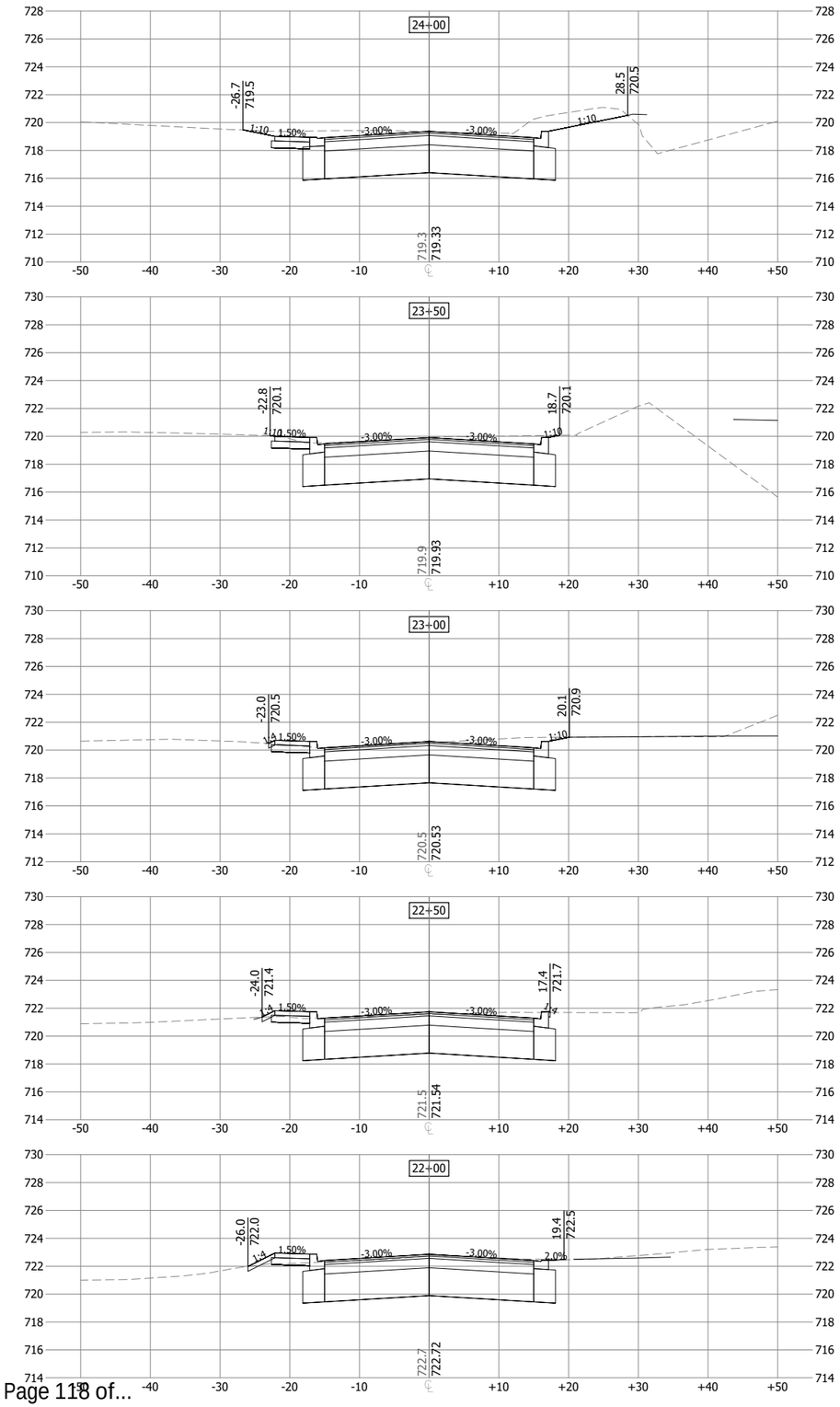

Stantec
733 Marquette Avenue, Suite 1000
Minneapolis, MN 55402
www.stantec.com

I HEREBY CERTIFY THAT THIS PLAN, SPECIFICATION, OR REPORT WAS PREPARED BY ME OR UNDER MY DIRECT SUPERVISION AND THAT I AM A DULY LICENSED PROFESSIONAL ENGINEER UNDER THE LAWS OF THE STATE OF MINNESOTA.

PRINT NAME: ERIC. S. LEMBKE

SIGNATURE:

DATE:

LIC. NO. 42748

PRELIMINARY 10%

CITY OF CHASKA, MINNESOTA

2022 DOWNTOWN RECONSTRUCTION

CROSS SECTIONS

MAPLE AND 5TH STREET

NO	REVISION	DATE

SURVEY	PWR
DRAWN	BJ/BF/JP/PJW
DESIGNED	ESL
CHECKED	KPA
APPROVED	ESL
PROJ. NO.	193805454

SHEET NUMBER

C705

Date: 2/23/2022 - 9:23pm
Login: pjwalsh
Office: CLIENT-MN-Minneapolis
Path: J:\193805454\CAD\CIVIL\Plans\Sheets\C700 Series\C705.dwg
Name: 193805454-KA SNO, 193805454-BO RIER

THE CONTRACTOR SHALL VERIFY AND BE RESPONSIBLE FOR ALL DIMENSIONS. DO NOT SCALE THE DRAWING - ANY ERRORS OR OMISSIONS SHALL BE REPORTED TO STANTEC WITHOUT DELAY. THE COPYRIGHTS TO ALL DESIGNS AND DRAWINGS ARE THE PROPERTY OF STANTEC. REPRODUCTION OR USE FOR ANY PURPOSE OTHER THAN THAT AUTHORIZED BY STANTEC IS FORBIDDEN.

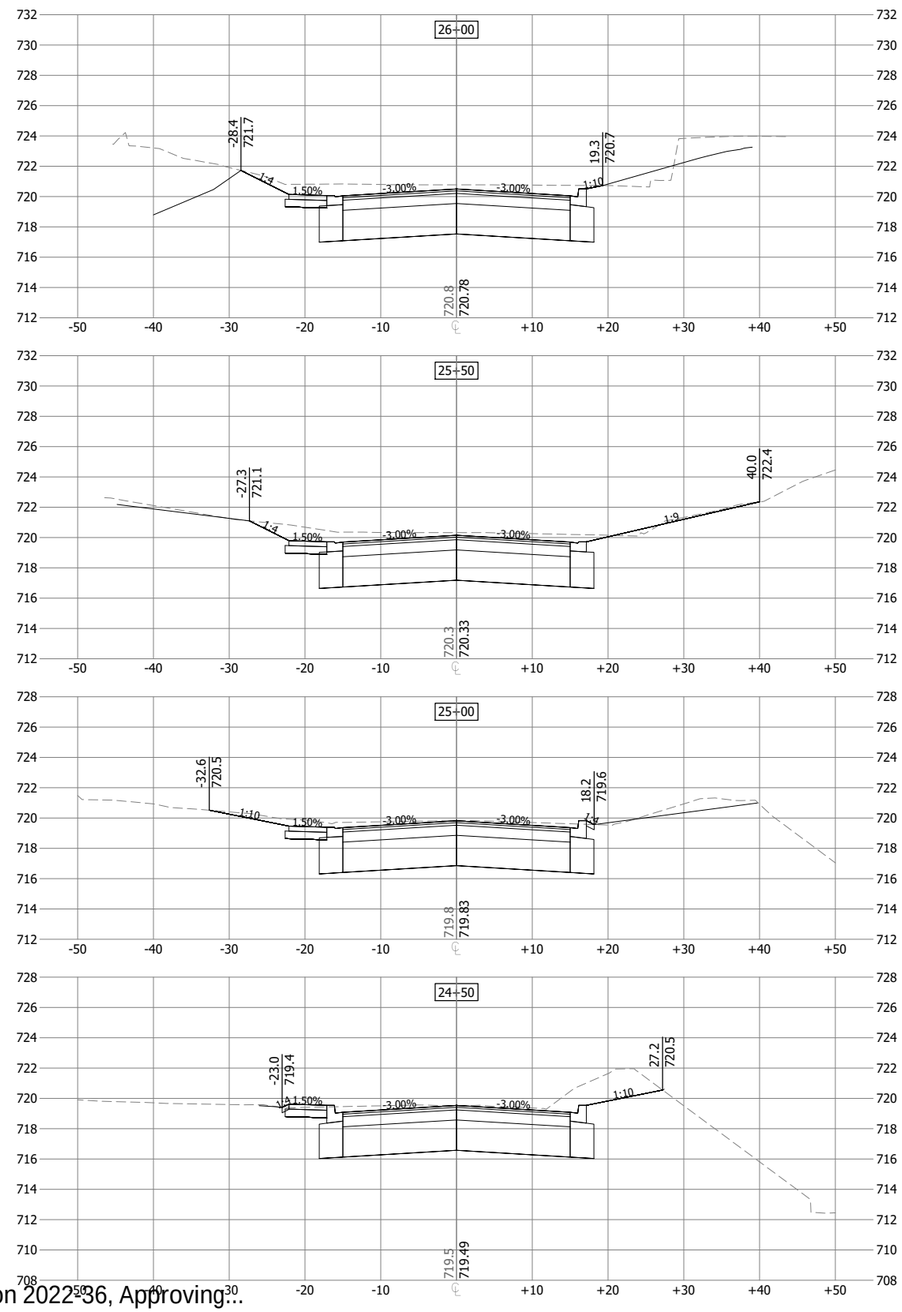

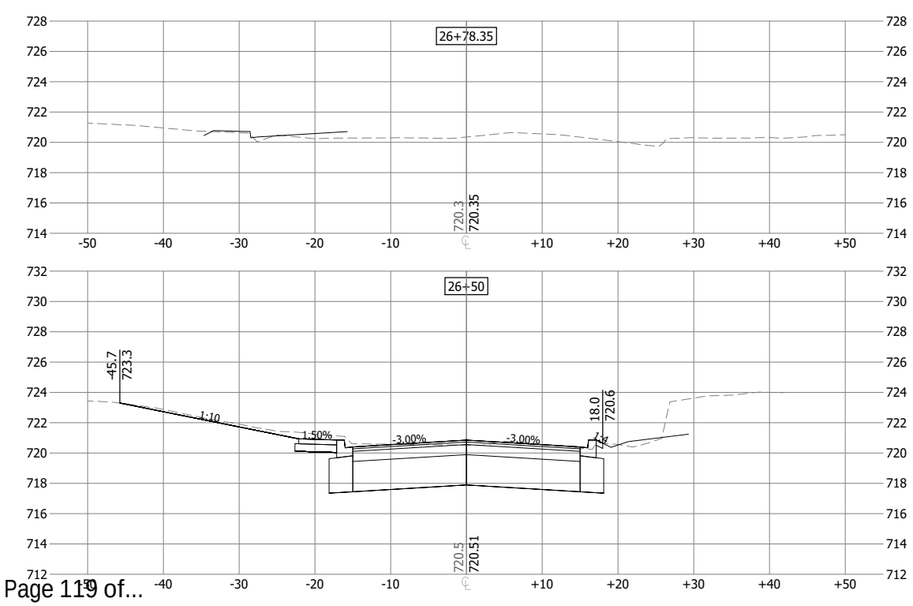

Stantec
733 Marquette Avenue, Suite 1000
Minneapolis, MN 55402
www.stantec.com

I HEREBY CERTIFY THAT THIS PLAN, SPECIFICATION, OR REPORT WAS PREPARED BY ME OR UNDER MY DIRECT SUPERVISION AND THAT I AM A DULY LICENSED PROFESSIONAL ENGINEER UNDER THE LAWS OF THE STATE OF MINNESOTA.

PRINT NAME: ERIC S. LEMBKE

SIGNATURE:

DATE:

LIC. NO. 49748

PRELIMINARY 10%

CITY OF CHASKA, MINNESOTA

2022 DOWNTOWN RECONSTRUCTION

CROSS SECTIONS

MAPLE AND 5TH STREET

NO	REVISION	DATE

SURVEY	PWR
DRAWN	BJ/BF/JP/PJW
DESIGNED	ESL
CHECKED	KPA
APPROVED	ESL
PROJ. NO.	193805454

SHEET NUMBER

C706

THE CONTRACTOR SHALL VERIFY AND BE RESPONSIBLE FOR ALL DIMENSIONS. DO NOT SCALE THE DRAWING - ANY ERRORS OR OMISSIONS SHALL BE REPORTED TO STANTEC WITHOUT DELAY. THE COPYRIGHTS TO ALL DESIGNS AND DRAWINGS ARE THE PROPERTY OF STANTEC. REPRODUCTION OR USE FOR ANY PURPOSE OTHER THAN THAT AUTHORIZED BY STANTEC IS FORBIDDEN.

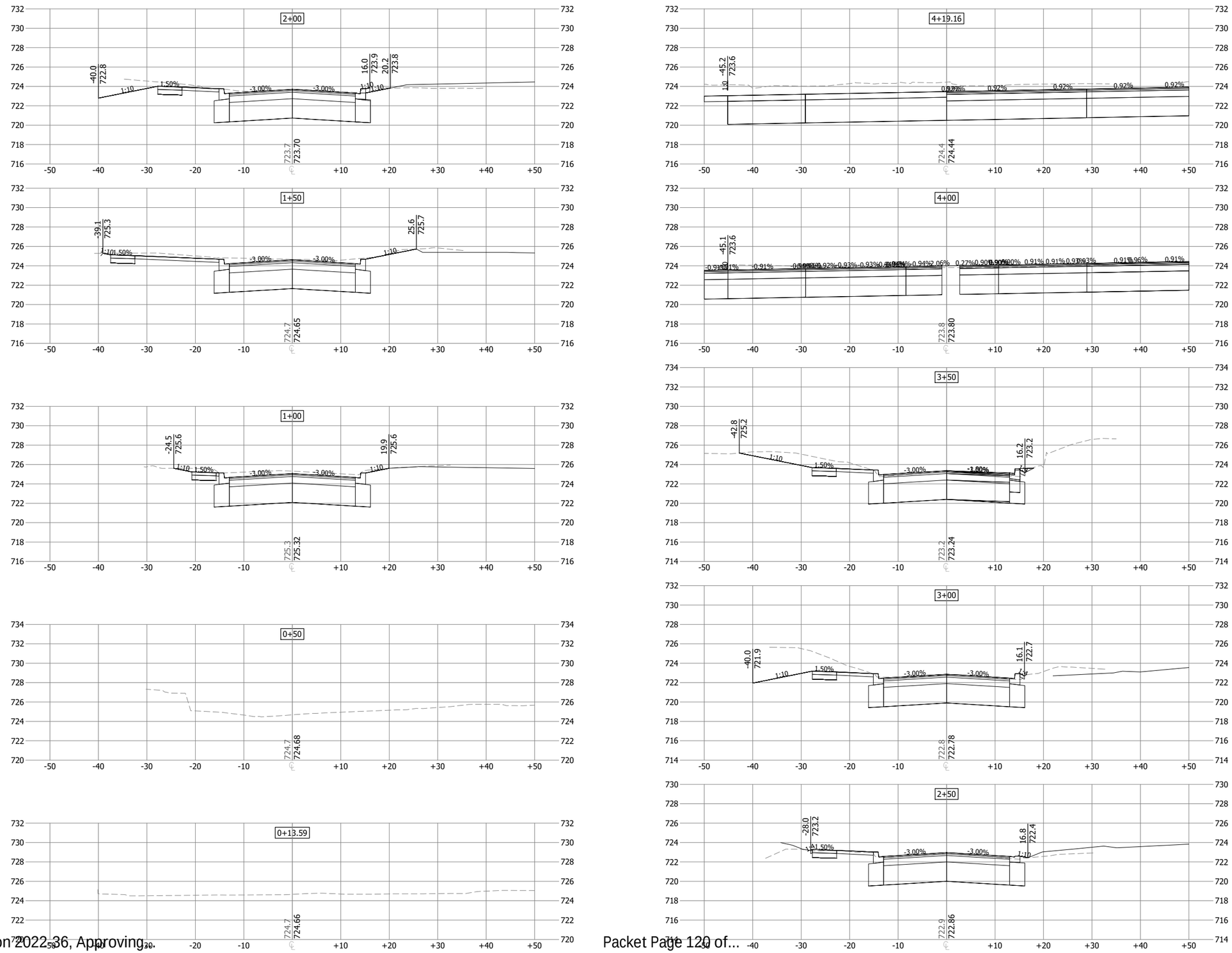

Stantec
733 Marquette Avenue, Suite 1000
Minneapolis, MN 55402
www.stantec.com

I HEREBY CERTIFY THAT THIS PLAN, SPECIFICATION, OR REPORT WAS PREPARED BY ME OR UNDER MY DIRECT SUPERVISION AND THAT I AM A DULY LICENSED PROFESSIONAL ENGINEER UNDER THE LAWS OF THE STATE OF MINNESOTA.

PRINT NAME: ERIC S. LEMBKE

SIGNATURE:

DATE:

LIC. NO. 49748

PRELIMINARY 10%

CITY OF CHASKA, MINNESOTA

2022 DOWNTOWN RECONSTRUCTION

CROSS SECTIONS

OAK STREET

NO	REVISION	DATE

SURVEY	PWR
DRAWN	BJ/BF/JP/PJW
DESIGNED	ESL
CHECKED	KPA
APPROVED	ESL
PROJ. NO.	193805454

SHEET NUMBER

C707

THE CONTRACTOR SHALL VERIFY AND BE RESPONSIBLE FOR ALL DIMENSIONS. DO NOT SCALE THE DRAWING. ALL DESIGNS, DRAWINGS AND SPECIFICATIONS ARE THE PROPERTY OF STANTEC. REPRODUCTION OR USE FOR ANY PURPOSE OTHER THAN THAT AUTHORIZED BY STANTEC IS FORBIDDEN.

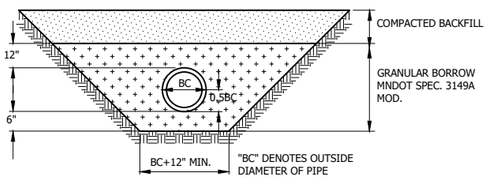

PIPE FOUNDATION & BEDDING IN GOOD SOILS

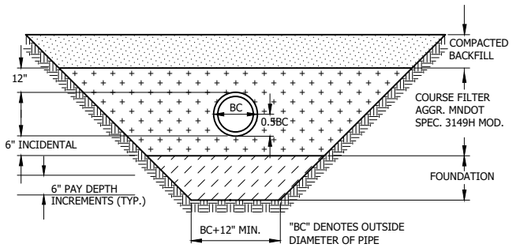

IMPROVED PIPE FOUNDATION & BEDDING IN POOR SOILS

Stantec
2335 Highway 36 W
St. Paul, MN 55113
www.stantec.com

BEDDING METHODS FOR PVC

CHASKA, MINNESOTA

LAST REVISION: MARCH 2008

PLATE NO. GEN–7

PRECAST INVERT WITH A MINIMUM 1% THROUGH SLOPE REQUIRED.

PRECAST INVERT MUST BE 1/2 DIAMETER OF THE PIPE AND BENCHES SLOPED 2" TOWARD THE INVERT.

FRAME	A	B
R1642-2310B	27"	7"
R1755G	27"	7"

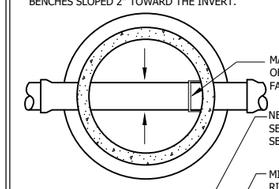

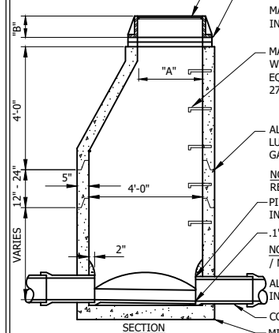

MANHOLE STEPS SHALL BE PLACED SO THAT OFFSET VERTICAL PORTION OF CONE IS FACING DOWNSTREAM.

NEENAH COVER **R-1642-5001**, LETTERED "SANITARY SEWER" WITH 2 CONCEALED PICK HOLES AND SELF SEALING LID. SEE SPECIFICATION FOR CASTING NUMBER.

MINIMUM OF 2 MAXIMUM OF 4 ADJUSTMENT RINGS. RINGS SHALL BE CONCRETE MORTAR WITH INFRASHIELD.

MAXIMUM 20"ADJUSTMENT ALLOWED INCLUDING RINGS AND CASTING.

MANHOLE STEPS, COPOLYMER POLYPROPYLENE PLASTIC, WITH 1/2" GRADE 60 STEEL REINFORCEMENT OR EQUAL, 16" ON CENTER. (NO STEPS ALLOWED IN UPPER 27" BARREL)

ALL JOINTS IN MANHOLE TO HAVE SELF LUBRICATING RUBBER GASKETS, RAMNECK, AND GATOR WRAP.

NOTE: ALL INFILTRATION AREAS SHALL BE REPAIRED UNTIL MANHOLE IS WATER TIGHT.

PIPE SHALL BE CUT 2" FROM INSIDE FACE OF WALL.

.1' DROP ACROSS INVERTS MIN.

NOTE: KOR-N-SEAL MANHOLE TO BE USED FOR PIPE / MANHOLE CONNECTION.

ALL DOG HOUSES SHALL BE GROUTED ON INSIDE OF MANHOLE.

COMPACT TO TOP OF PIPE, TO FIRST JOINT.

MINIMUM THICKNESS OF PRECAST BASE IS 6" FOR 14' DEEP OR LESS, AND INCREASES 1" IN THICKNESS FOR EVERY 4' OF DEPTH GREATER THAN 14'.

OUTER SURFACE OF ALL PRE-CAST SECTIONS SHALL RECEIVE 2 COATS OF BITUMINOUS DAMP PROOFING (SEE ENGINEERING GUIDELINES OR PROJECT SPECIFICATIONS FOR MORE DETAILS) .

Stantec
2335 Highway 36 W
St. Paul, MN 55113
www.stantec.com

SANITARY SEWER MANHOLE

CHASKA, MINNESOTA

LAST REVISION: MARCH 2018

PLATE NO. SAN–1

PRECAST INVERT WITH A MINIMUM 1% THROUGH SLOPE REQUIRED.

PRECAST INVERT MUST BE 1/2 DIAMETER OF THE PIPE AND BENCHES SLOPED 2" TOWARD THE INVERT.

FRAME	A	B
R16420245	27"	7"
R1755G	27"	7"

OUTER SURFACE OF ALL PRE-CAST SECTIONS SHALL RECEIVE 2 COATS OF BITUMINOUS DAMP PROOFING (SEE ENGINEERING GUIDELINES OR PROJECT SPECIFICATIONS FOR MORE DETAILS) .

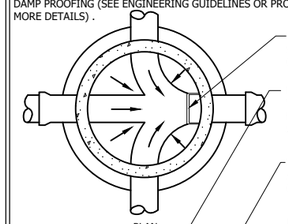

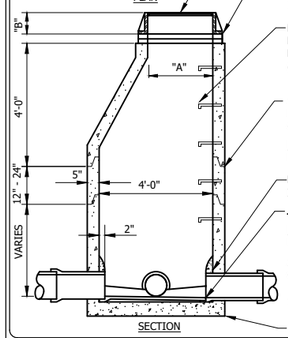

MANHOLE STEPS SHALL BE PLACED SO THAT OFFSET VERTICAL PORTION OF CONE IS FACING DOWNSTREAM.

NEENAH COVER **R1642-5001**, LETTERED "SANITARY SEWER" WITH 2 CONCEALED PICK HOLES AND SELF SEALING LID. SEE SPECIFICATIONS FOR CASTING NUMBER

MINIMUM OF 2 MAXIMUM OF 4 ADJUSTMENT RINGS. RINGS SHALL BE CONCRETE MORTAR WITH INFRASHIELD.

MAXIMUM 20" ADJUSTMENT ALLOWED INCLUDING RINGS AND CASTING

MANHOLE STEPS, COPOLYMER POLYPROPYLENE PLASTIC, WITH 1/2" GRADE 60 STEEL REINFORCEMENT OR EQUAL, 16" ON CENTER. (NO STEPS ALLOWED IN UPPER 27" BARREL)

ALL JOINTS IN MANHOLE TO HAVE SELF LUBRICATING RUBBER GASKETS, RAMNECK, AND GATOR WRAP.

NOTE: ALL INFILTRATION AREAS SHALL BE REPAIRED UNTIL MANHOLE IS WATER TIGHT.

PIPE SHALL BE CUT OUT 2" FROM INSIDE FACE OF WALL.

.1' DROP ACROSS INVERTS (MIN.)

NOTE: KOR-N-SEAL MANHOLE TO BE USED FOR PIPE / MANHOLE CONNECTION.

ALL DOG HOUSES SHALL BE GROUTED ON INSIDE OF MANHOLE.

MINIMUM THICKNESS OF PRECAST BASE IS 6" FOR 14' DEEP OR LESS, AND INCREASES 1" IN THICKNESS FOR EVERY 4' OF DEPTH GREATER THAN 14'.

Stantec
2335 Highway 36 W
St. Paul, MN 55113
www.stantec.com

SANITARY SEWER JUNCTION MANHOLE

CHASKA, MINNESOTA

LAST REVISION: MARCH 2018

PLATE NO. SAN–2

PRECAST INVERT WITH A MINIMUM 1% THROUGH SLOPE REQUIRED.

PRECAST INVERT MUST BE 1/2 DIAMETER OF THE PIPE AND BENCHES SLOPED 2" TOWARD THE INVERT.

FRAME	A	B
R1642-2310B	27"	7"
R1755G	27"	7"

OUTER SURFACE OF ALL PRE-CAST SECTIONS SHALL RECEIVE 2 COATS OF BITUMINOUS DAMP PROOFING (SEE ENGINEERING GUIDELINES OR PROJECT SPECIFICATIONS FOR MORE DETAILS) .

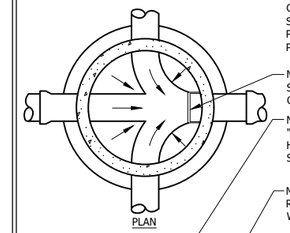

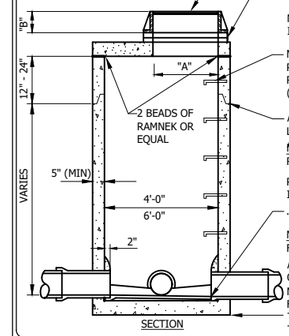

MANHOLE STEPS SHALL BE PLACED SO THAT OFFSET VERTICAL PORTION OF CONE IS FACING DOWNSTREAM.

NEENAH COVER **R1642-5001**, LETTERED "SANITARY SEWER", WITH 2 CONCEALED PICK HOLES AND SELF SEALING LID. SEE SPECIFICATION FOR CASTING NUMBER.

MINIMUM OF 2 MAXIMUM OF 4 ADJUSTMENT RINGS. RINGS SHALL BE CONCRETE MORTAR WITH INFRASHIELD.

MAXIMUM 20" ADJUSTMENT ALLOWED INCLUDING RINGS AND CASTING.

MANHOLE STEPS, COPOLYMER POLYPROPYLENE PLASTIC, WITH 1/2" GRADE 60 STEEL REINFORCEMENT OR EQUAL,16" ON CENTER. (NO STEPS ALLOWED IN TOP SLAB.)

ALL JOINTS IN MANHOLE TO HAVE SELF LUBRICATING RUBBER GASKETS, RAMNECK, AND GATOR WRAP.

NOTE: ALL INFILTRATION AREAS SHALL BE REPAIRED UNTIL MANHOLE IS WATER TIGHT.

PIPE SHALL BE CUT OUT 2" FROM INSIDE FACE OF WALL.

.1' DROP ACROSS INVERTS (MIN.)

NOTE: KOR-N-SEAL MANHOLE TO BE USED FOR PIPE / MANHOLE CONNECTION.

ALL DOG HOUSES SHALL BE GROUTED ON INSIDE OF MANHOLE.

MINIMUM THICKNESS OF PRECAST BASE IS 6" FOR 14' DEEP OR LESS, AND INCREASES 1" IN THICKNESS FOR EVERY 4' OF DEPTH GREATER THAN 14'.

Stantec
2335 Highway 36 W
St. Paul, MN 55113
www.stantec.com

SANITARY SEWER JUNCTION MANHOLE WITH REINFORCED TOP SLAB

CHASKA, MINNESOTA

LAST REVISION: MARCH 2018

PLATE NO. SAN–3

FRAME	A	B
R1642-2310B	27"	7"
R1755G	27"	7"

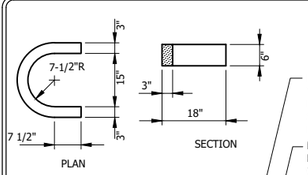

HORSESHOE DETAILS

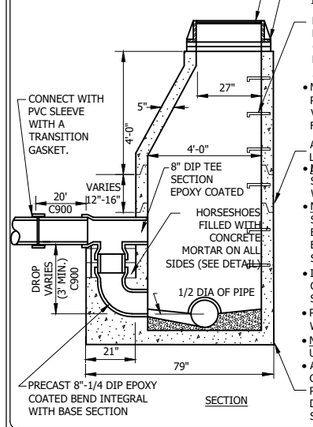

NEENAH COVER **R-1642-5001**, LETTERED "SANITARY SEWER", WITH 2 CONCEALED PICK HOLES AND SELF SEALING LID. SEE SPECS. FOR CASTING NUMBERS.

MINIMUM OF 2 MAXIMUM OF 4 ADJUSTMENT RINGS. RINGS SHALL BE CONCRETE MORTAR WITH INFRASHIELD.

- MAXIMUM 20" ADJUSTMENT ALLOWED INCLUDING RINGS AND CASTING.
- MANHOLE STEPS, COPOLYMER POLYPROPYLENE PLASTIC, WITH 1/2" GRADE 60 STEEL REINFORCEMENT OR EQUAL 16" ON CENTER. (NO STEPS ALLOWED IN UPPER 27" BARREL.)
- MANHOLE STEPS SHALL BE PLACED SO THAT OFFSET VERTICAL PORTION OF CONE IS FACING DOWNSTREAM.
- ALL JOINTS IN MANHOLE TO HAVE SELF LUBRICATING RUBBER GASKETS, RAMNECK, AND GATOR WRAP.
- NOTE: ALL INFILTRATION AREAS SHALL BE REPAIRED UNTIL MANHOLE IS WATER TIGHT.
- NOTE: OUTER SURFACE OF ALL PRE-CAST SECTIONS SHALL RECEIVE 2 COATS OF BITUMINOUS DAMP PROOFING (SEE ENGINEERING GUIDELINES OR PROJECT SPECIFICATIONS FOR MORE DETAILS).
- INTERIOR MANHOLE WALL SHALL BE COMPLETELY LINED WITH HDPE, SEE SPEC FOR MORE DETAILS.
- PIPE SHALL BE CUT OUT FLUSH WITH INSIDE FACE OF WALL.
- NOTE: KOR-N-SEAL MANHOLE TO BE USED FOR PIPE / MANHOLE CONNECTION.
- ALL DOG HOUSES SHALL BE GROUTED ON INSIDE OF MANHOLE.
- PRECAST INVERT SHOULD BE 1/2 DIAMETER OF PIPE AND BENCHES SLOPED 2" TOWARD INVERT.

Stantec
2335 Highway 36 W
St. Paul, MN 55113
www.stantec.com

SANITARY SEWER DROP INLET MANHOLE

CHASKA, MINNESOTA

LAST REVISION: MARCH 2018

PLATE NO. SAN–4

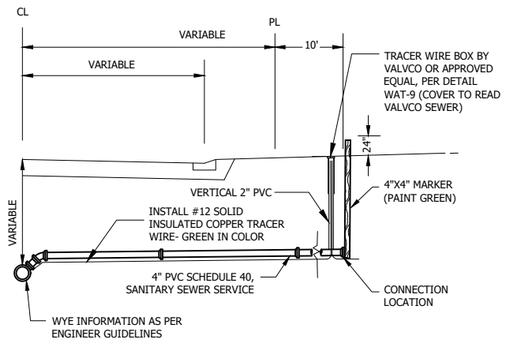

NOTES:
1. SEWER SERVICES, 4" SCHEDULE 40 PVC SEWER PIPE
2. SLOPE - 1/4" PER FOOT MINIMUM.
3. PIPE JOINTS SHALL BE NON GASKETED, SOLVENT WELD TYPE.
4. ALL PIPE SHALL BE BEDDED IN GRANULAR BORROW 3149.2B1 EXCEPT THE LAST TEN FEET WHERE COARSE FILTER AGGREGATE (3149.2H) AGGREGATE WILL BE REQUIRED.
5. BENDS OF 45° OR LESS SHALL BE USED WITHIN THE LAST 5' OF THE SERVICE IF THE DEPTH OF THE SERVICE WOULD EXCEED 10'.
6. NO SERVICE RISERS LESS THAN 3 FEET SHALL BE PERMITTED.
7. A SEPARATE TRACER WIRE WILL EXTEND FROM THE FINISH GRADE AT TRACER WIRE BOX AND FOLLOW SEWER SERVICE TO STRUCTURE FOUNDATION. TRACER WIRE FROM BOX TO FOUNDATION BY OTHERS.
8. FOR DEPTHS GREATER THAN 22', SERVICE PIPE SHALL BE C900 FROM MAIN TO CONNECTION, WITH TRANSITION FITTING FROM C900 TO SCH 40 INSTALLED AT CONNECTION LOCATION.

Stantec
2335 Highway 36 W
St. Paul, MN 55113
www.stantec.com

SEWER SERVICE CONNECTION

CHASKA, MINNESOTA

LAST REVISION: APRIL 2016

PLATE NO. SER–1

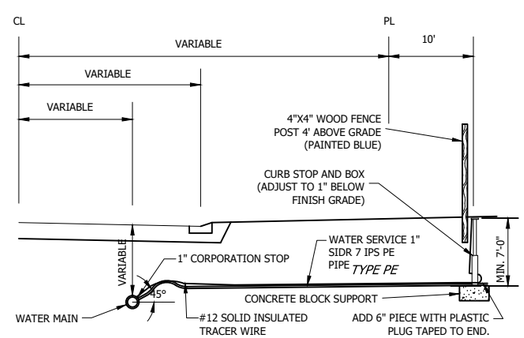

PVC WATER MAIN
STAINLESS STEEL SERVICE SADDLE
SMITH-BLAIR 372 OR APPROVED EQUAL

NOTE: FOR SERVICES LARGER THAN 1" A TAPPING SLEEVE IS REQUIRED. ROCKWELL TYPE 230, FULL CIRCLE, WITH TAP THREADED FOR APPROPRIATE SIZE COPPER CORPORATION STOP. (OR EQUAL)

CORPORATION STOP	CURB STOP	CURB BOX
MUELLER B25009N	MUELLER B25222N	MUELLER H-10300-N OR H-10302-N
FORD FB1001-4Q	FORD B66444MQ	FORD EM2-75-56R-NL OR EM2-75-57R-NL
A.Y. MCDONALD 74704B	A.Y. MCDONALD 76104	A.Y. MCDONALD 75615 OR 75614

*TRANSITION COUPLER USED ON EXISTING SERVICES. SEE PLAN SHEETS FOR TYPE PER ADDRESS.

NOTES:
1. CURB BOX SHALL HAVE A STATIONARY ROD.
2. CURB BOX SHALL EXTEND FROM 78" TO 90".
3. ALL PIPE SHALL BE BEDDED IN GRANULAR BORROW 3149.2B1 EXCEPT THE LAST TEN FEET WHERE COARSE FILTER AGGREGATE (3149.2H) WILL BE REQUIRED.
4. IF CURB STOP IS IN DRIVEWAY, CONTRACTOR MUST INSTALL A FORD A-1 CASTING, MARKED WITH "WATER" ON LID.
5. CURB BOX LID SHALL BE MUELLER #89375 "TW" OR EQUAL.
6. ALL BRASS FITTINGS SHALL BE "NO LEAD BRASS".
7. PIPE INSERT STIFFENERS REQUIRED FOR FITTING CONNECTIONS.
8. HDPE SERVICE PIPE SHALL BE MANUFACTURED BY ENDOPURE OR BLUE ULTRA PIPE.

Stantec
2335 Highway 36 W
St. Paul, MN 55113
www.stantec.com

WATER SERVICE CONNECTION HDPE PIPE

CHASKA, MINNESOTA

LAST REVISION: MARCH 2016

PLATE NO. SER–2A

PVC PIPE BED AND ENCASE IN SELECT GRANULAR, TYPICAL PVC APPLICATION.

SERVICE RISERS FOR SEWER MAINS LESS THAN 22' SHALL BE SCHEDULE 40 PVC (SOLVENT WELD JOINTS). FOR DEPTHS GREATER THAN 22', SERVICE PIPE SHALL BE C900 FROM MAIN TO CONNECTION WITH TRANSITION FITTING FROM C900 TO SCH 40 INSTALLED AT CONNECTION LOCATION.

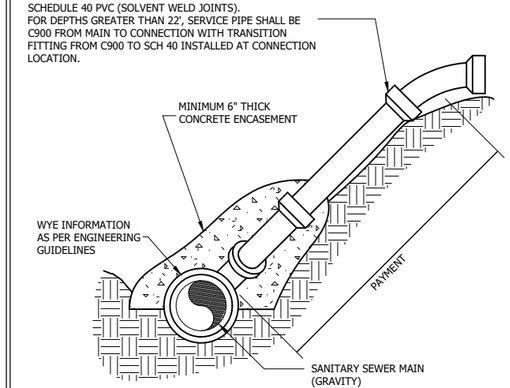

Stantec
2335 Highway 36 W
St. Paul, MN 55113
www.stantec.com

SERVICE RISER

CHASKA, MINNESOTA

LAST REVISION: MARCH 2016

PLATE NO. SER–3

Stantec
733 Marquette Avenue, Suite 1000
Minneapolis, MN 55402
www.stantec.com

I HEREBY CERTIFY THAT THIS PLAN, SPECIFICATION, OR REPORT WAS PREPARED BY ME OR UNDER MY DIRECT SUPERVISION AND THAT I AM A DULY LICENSED PROFESSIONAL ENGINEER UNDER THE LAWS OF THE STATE OF MINNESOTA.

PRINT NAME: ERIC. S. LEMBKE

SIGNATURE:

DATE:

LIC. NO. 49748

PRELIMINARY 10%

CITY OF CHASKA, MINNESOTA

2022 DOWNTOWN RECONSTRUCTION

SANITARY SEWER
STANDARD DETAILS

NO	REVISION	DATE

SURVEY	PWR
DRAWN	BJ/BF/JP/PJW
DESIGNED	ESL
CHECKED	KPA
APPROVED	ESL
PROJ. NO.	193805454

SHEET NUMBER
C8.01

Date: 10/27/2022 - 8:54pm
User: jon.pierson@stantec.com
Drawing: ...\193805454-C801.dwg
XREF(s): 193805454-ORDER

THE CONTRACTOR SHALL VERIFY AND BE RESPONSIBLE FOR ALL DIMENSIONS. DO NOT SCALE THE DRAWING - ANY ERRORS OR OMISSIONS SHALL BE REPORTED TO STANTEC WITHOUT DELAY. THE COPYRIGHTS TO ALL DESIGNS AND DRAWINGS ARE THE PROPERTY OF STANTEC. REPRODUCTION OR USE FOR ANY PURPOSE OTHER THAN THAT AUTHORIZED BY STANTEC IS FORBIDDEN.

NOTE:
CLEANOUT CAP SHALL BE THREADED MALLEABLE IRON (GALVANIZED)

NOTE:
ENCLOSE LONG SWEEP BEND OR COMBINATION WYE IN CONCRETE AS SHOWN.

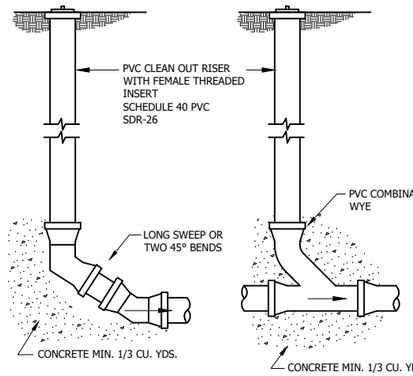

END OF LINE CLEANOUT

IN LINE CLEANOUT

NOTE:
CLEANOUT IS REQUIRED FOR EVERY 100 FEET OF SERVICE LENGTH.

NOTE:
1. IF CLEAN OUT IS IN DRIVEWAY, CONTRACTOR MUST INSTALL FORD A-1 CASTING, MARKED WITH "SEWER" ON LID.
2. IF VALVE BOX IS IN ROADWAY, CONTRACTOR MUST INSTALL TOP SECTION OF A VALVE BOX WITH LID MARKED "SEWER".

Stantec
2335 Highway 36 W
St. Paul, MN 55113
www.stantec.com

SERVICE LINE CLEANOUTS

CHASKA, MINNESOTA

LAST REVISION: MARCH 2001

PLATE NO. SER–4

NOTES: CORE BLUE BOLTS REQUIRED FOR ALL MECHANICAL FITTINGS. ANTI-CORROSIVE COATING REQUIRED ON ALL BOLTS AND TIE ROD ASSEMBLIES.

DROP LID		
TYLER	NO. 6860	
MUELLER	NO. H-10361	
BIBBY-STE-CROIX	NO. B-5160	
TOP		
TYLER	NO. 6860	26"
MUELLER	NO. H-10361	26"
BIBBY-STE-CROIX	NO. VB502	27"
EXTENSION		
TYLER	NO. 58	14"
	NO. 59	18"
	NO. 60	24"
MUELLER	NO. 58	14"
	NO. 59	20"
BIBBY-STE-CROIX		
VB520 VB521	NO. 57	9"
VB522 VB523	NO. 58	14"
	NO. 59	20"
	NO. 60	26"
BOTTOM		
TYLER	NO. 6860	65"
MUELLER	NO. H-10361	65"
BIBBY-STE-CROIX	NO. VB516	60"

- PROVIDE POLYWRAP AROUND ALL WATERMAIN
- 7.5' MINIMUM COVER REQUIRED OVER TOP OF WATER MAIN.
- RESTRAIN TEE AND VALVE WITH EPOXY COATED MEGALUG (OR EQUAL) THRUST RESTRAINTS.
- ADJUST TOP TO 1/2" BELOW GRADE. BOX TO BE SET TO PROVIDE 12" OF ADJUSTMENT.
- TYLER NO. 6860 MUELLER NO. H-10357 BIBBY-STE-CROIX B-5001 GATE VALVE BOX, SCREW TYPE, 3 PIECE, 5 1/4" SHAFT, SIZE G BOX, 7'-6" EXTENDED, #6 ROUND BASE
- PROVIDE VALVE STEM RISERS TO WITHIN 1 FOOT OF THE SURFACE.
- GATE VALVE ADAPTER: 1/4" STEEL WITH PROTECTIVE COATING, 1/2" RUBBER GASKET INSTALLED BETWEEN THE GATE VALVE AND GATE VALVE ADAPTER.
- RESILIANT WEDGE VALVE CONFORMING TO AWWA C509-DI OR C515 STANDARDS WITH STAINLESS STEEL BOLTS AND BRONZE TOP NUT

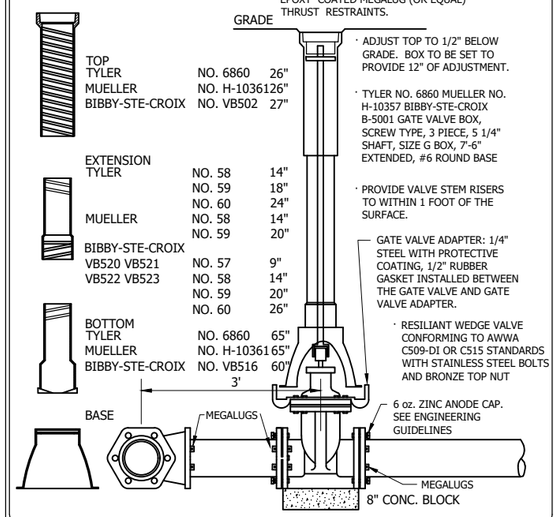

Stantec
733 Marquette Ave Suite 1000
Minneapolis, MN 55402
www.stantec.com

GATE VALVE AND BOX INSTALLATION

CHASKA, MINNESOTA

LAST REVISION: MARCH 2019

PLATE NO. WAT–1

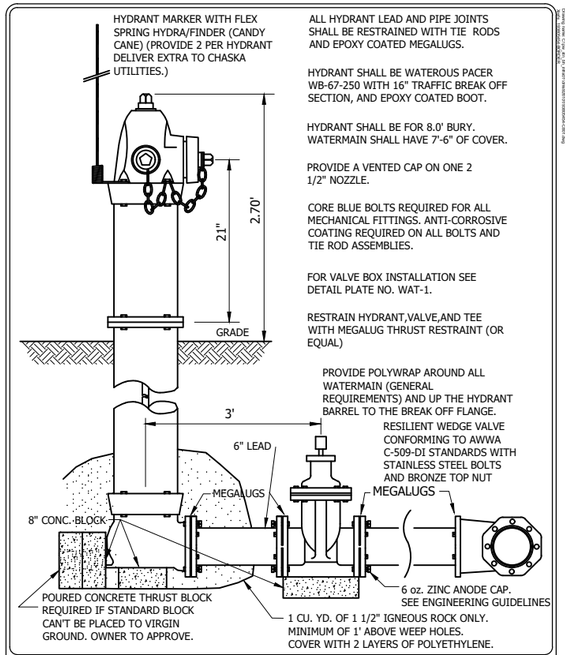

ALL HYDRANT LEAD AND PIPE JOINTS SHALL BE RESTRAINED WITH TIE RODS AND EPOXY COATED MEGALUGS.

HYDRANT SHALL BE WATEROUS PACER WB-67-250 WITH 16" TRAFFIC BREAK OFF SECTION, AND EPOXY COATED BOOT.

HYDRANT SHALL BE FOR 8.0' BURY. WATERMAIN SHALL HAVE 7'-6" OF COVER.

PROVIDE A VENTED CAP ON ONE 2 1/2" NOZZLE.

CORE BLUE BOLTS REQUIRED FOR ALL MECHANICAL FITTINGS. ANTI-CORROSIVE COATING REQUIRED ON ALL BOLTS AND TIE ROD ASSEMBLIES.

FOR VALVE BOX INSTALLATION SEE DETAIL PLATE NO. WAT-1.

RESTRAIN HYDRANT,VALVE,AND TEE WITH MEGALUG THRUST RESTRAINT (OR EQUAL)

PROVIDE POLYWRAP AROUND ALL WATERMAIN (GENERAL REQUIREMENTS) AND UP THE HYDRANT BARREL TO THE BREAK OFF FLANGE.

RESILIENT WEDGE VALVE CONFORMING TO AWWA C-509-DI STANDARDS WITH STAINLESS STEEL BOLTS AND BRONZE TOP NUT

Stantec
733 Marquette Ave Suite 1000
Minneapolis, MN 55402
www.stantec.com

WATEROUS PACER HYDRANT AND VALVE INSTALLATION

CHASKA, MINNESOTA

LAST REVISION: MARCH 2019

PLATE NO. WAT–2

NOTES:
1. SHAPE OF BACK OF BUTTRESS MAY VARY AS LONG AS POURED AGAINST FIRM UNDISTURBED EARTH.
2. DIMENSION C1,C2,C3 SHOULD BE LARGE ENOUGH TO MAKE ANGLE Θ EQUAL TO OR LARGER THAN 45°.
3. DIMENSION A1,A2,A3 SHOULD BE AS LARGE AS POSSIBLE WITHOUT INTERFERING WITH MJ BOLTS.
4. PROVIDE POLYETHYLENE WRAP AROUND ALL WATERMAIN.
5. ALL BENDS AND FITTINGS SHALL BE RESTRAINED WITH BOTH EPOXY COATED MEGA-LUGS AND THRUST BLOCKING.

BUTTRESS DIMENSIONS

PIPE SIZE	22 1/2° BEND B_1	22 1/2° BEND D_1	45° BEND B_2	45° BEND D_2	90° BEND B_3	90° BEND D_3
6"	1'-5"	1'-5"	1'-5"	1'-5"	2'-1"	1'-6"
8"	1'-5"	1'-5"	2'-1"	1'-6"	2'-8"	2'-0"
12"	1'-10"	1'-10"	3'-4"	2'-0"	4'-9"	2'-6"
16"	3'-0"	2'-0"	3'-10"	3'-0"	6'-2"	3'-6"
20"	3'-6"	2'-8"	5'-6'	3'-4"	8'-4"	4'-0"
24"	4'-4"	3'-0"	6'-10"	3'-10"	9'-8"	5'-0"
30"	-	-	9'-3"	6'-0"	17'-0"	6'-0"

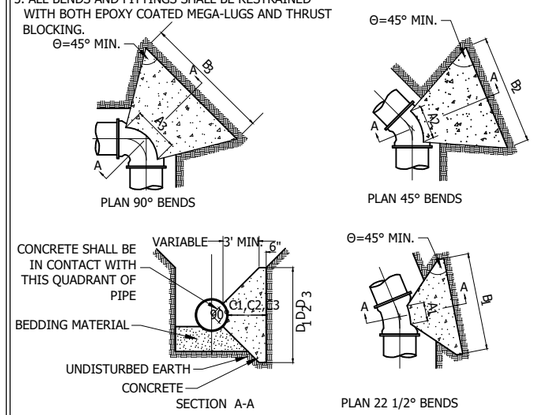

Stantec
2335 Highway 36 W
St. Paul, MN 55113
www.stantec.com

CONCRETE THRUST BLOCKING

CHASKA, MINNESOTA

LAST REVISION: APRIL 2005

PLATE NO. WAT–4

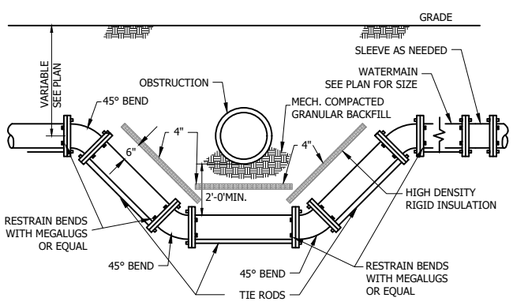

1. USE EPOXY COATED MEGALUG THRUST RESTRAINTS AND COATED TIE RODS ON ALL JOINTS AND FITTINGS. CORE BLUE BOLTS REQUIRED ON ALL MECHANICAL JOINTS.
2. RESTRAIN A MINIMUM OF TWO PIPE JOINTS (40 LF) LEFT AND RIGHT OF THE LOWERING.
3. SEE PLATE NO. GEN-11 TO DETERMINE THE WIDTH OF THE INSULATING BOARD REQUIRED
4. SEE PLATE NO. WAT-4 TO DETERMINE THE REQUIRED CONCRETE THRUST BLOCKING.
5. ANTI CORROSIVE COATING REQUIRED ON ALL BOLT AND RESTRAINT ASSEMBLIES AND WELDS.
6. SACRAFICIAL ZINC ANODE CAPS ON EACH SIDE OF WATER FITTINGS. SEE ENGINEERING GUIDELINES.
7. INSTALL POLYETHELENE FILM WRAP AROUND ALL PIPE INCLUDED IN THE LOWERING.

Stantec
733 Marquette Ave Suite 1000
Minneapolis, MN 55402
www.stantec.com

WATER MAIN LOWERING WITH INSULATION DETAIL

CHASKA, MINNESOTA

LAST REVISION: MARCH 2019

PLATE NO. WAT–6

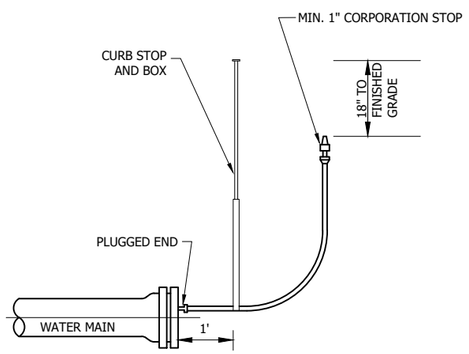

AFTER MEETING TEST REQUIREMENTS THE AIR BLEED LINE SHALL BE DISCONNECTED AT THE PLUG WITH NO ADDITIONAL COMPENSATION.

Stantec
2335 Highway 36 W
St. Paul, MN 55113
www.stantec.com

TYPICAL AIR BLEED INSTALLATION

CHASKA, MINNESOTA

LAST REVISION: MARCH 2008

PLATE NO. WAT–8

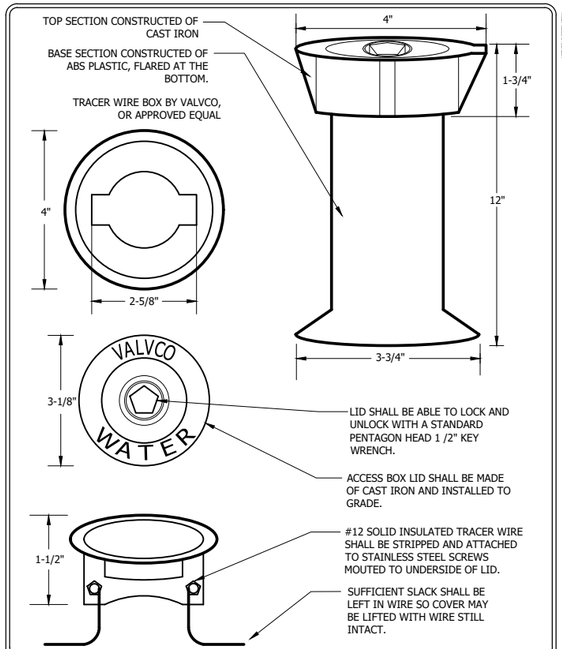

Stantec
2335 Highway 36 W
St. Paul, MN 55113
www.stantec.com

DIP TO C900 WATERMAIN TRANSITION FOR TRACER WIRE

CHASKA, MINNESOTA

LAST REVISION: MAY 2016

PLATE NO. WAT–9

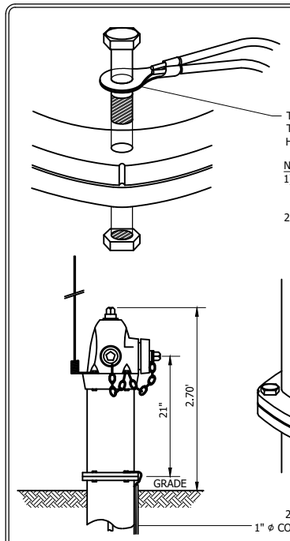

Stantec
2335 Highway 36 W
St. Paul, MN 55113
www.stantec.com

TRACER WIRE FOR PVC WATER MAIN

CHASKA, MN

LAST REVISION: APRIL 2008

PLATE NO. WAT–10

Stantec
733 Marquette Avenue, Suite 1000
Minneapolis, MN 55402
www.stantec.com

I HEREBY CERTIFY THAT THIS PLAN, SPECIFICATION, OR REPORT WAS PREPARED BY ME OR UNDER MY DIRECT SUPERVISION AND THAT I AM A DULY LICENSED PROFESSIONAL ENGINEER UNDER THE LAWS OF THE STATE OF MINNESOTA.

PRINT NAME: ERIC. S. LEMBKE

SIGNATURE:

DATE:

LIC. NO. 42748

PRELIMINARY 10%

CITY OF CHASKA, MINNESOTA
2022 DOWNTOWN RECONSTRUCTION
WATER MAIN
STANDARD DETAILS

NO	REVISION	DATE

SURVEY	PWR
DRAWN	BJ/BF/JP/PJW
DESIGNED	ESL
CHECKED	KPA
APPROVED	ESL
PROJ. NO.	193805454

SHEET NUMBER
C8.02

Date: 10/27/2022 - 8:54pm
Drawing: P:\193805454\CAD\Civil\Plan\Sht\Infrst01\dmn92810\193805454-C801.dwg
Layout: C8.02 STANDARD DETAILS
XREF(S): 193805454-ORDER

THE CONTRACTOR SHALL VERIFY AND BE RESPONSIBLE FOR ALL DIMENSIONS. DO NOT SCALE THE DRAWING. ALL DESIGNS, DRAWINGS AND SPECIFICATIONS ARE THE PROPERTY AND SHALL REMAIN THE COPYRIGHTS TO ALL DESIGNS AND DRAWINGS ARE THE PROPERTY OF STANTEC. REPRODUCTION OR USE FOR ANY PURPOSE OTHER THAN THAT AUTHORIZED BY STANTEC IS FORBIDDEN.

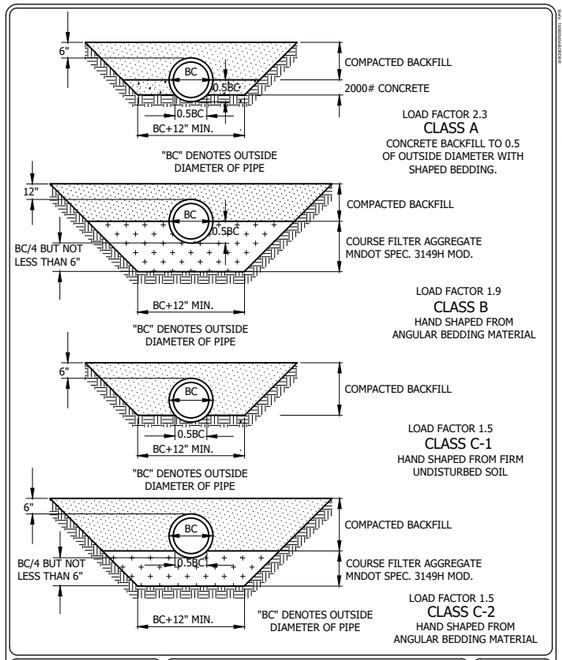

Stantec
2335 Highway 36 W
St. Paul, MN 55113
www.stantec.com

BEDDING METHODS FOR RCP OR DIP

CHASKA, MINNESOTA

LAST REVISION: MARCH 2001

PLATE NO. GEN–6

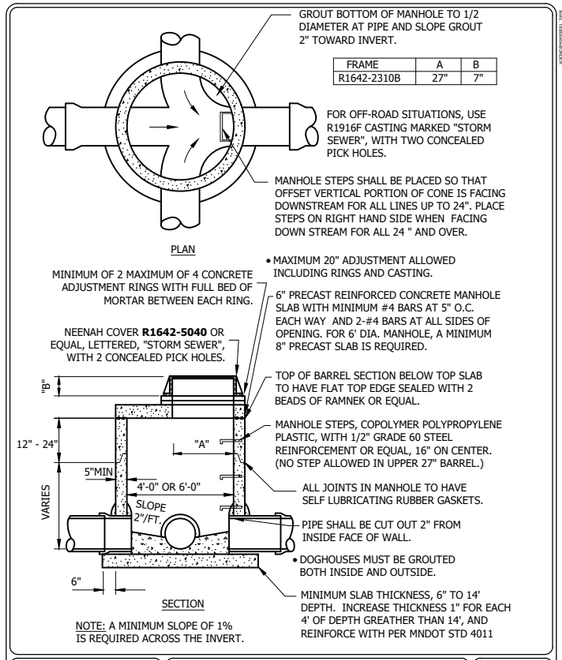

FRAME	A	B
R1642-2310B	27"	7"

NOTE: A MINIMUM SLOPE OF 1% IS REQUIRED ACROSS THE INVERT.

Stantec
2335 Highway 36 W
St. Paul, MN 55113
www.stantec.com

STORM SEWER JUNCTION MANHOLE WITH REINFORCED TOP SLAB

CHASKA, MINNESOTA

LAST REVISION: MARCH 2018

PLATE NO. STO–3

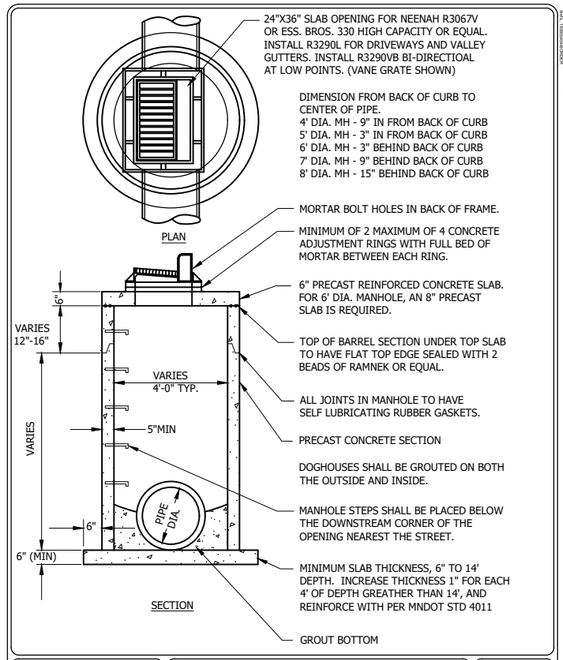

Stantec
2335 Highway 36 W
St. Paul, MN 55113
www.stantec.com

TYPE II CATCHBASIN MANHOLE

CHASKA, MINNESOTA

LAST REVISION: MARCH 2018

PLATE NO. STO–5

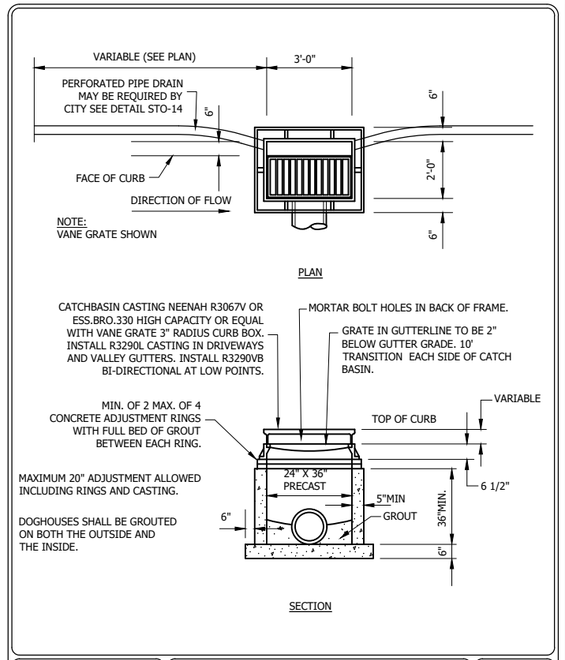

Stantec
2335 Highway 36 W
St. Paul, MN 55113
www.stantec.com

TYPE II CATCHBASIN

CHASKA, MINNESOTA

LAST REVISION: MARCH 2018

PLATE NO. STO–6

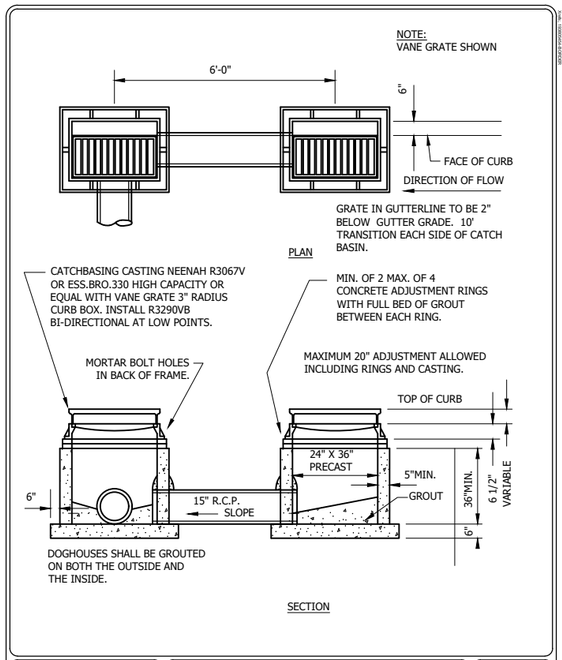

Stantec
2335 Highway 36 W
St. Paul, MN 55113
www.stantec.com

DOUBLE TYPE II CATCHBASIN

CHASKA, MINNESOTA

LAST REVISION: MARCH 2018

PLATE NO. STO–8

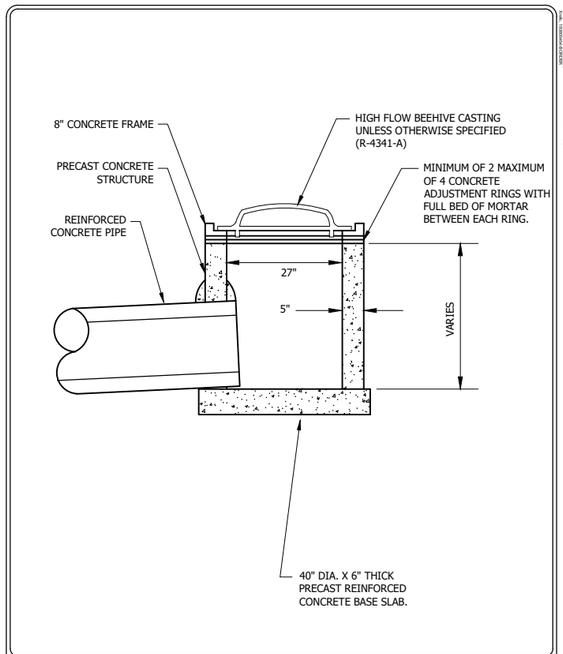

Stantec
2335 Highway 36 W
St. Paul, MN 55113
www.stantec.com

PRECAST 27" SHALLOW DEPTH BEEHIVE

CHASKA, MINNESOTA

LAST REVISION: MARCH 2018

PLATE NO. STO–9

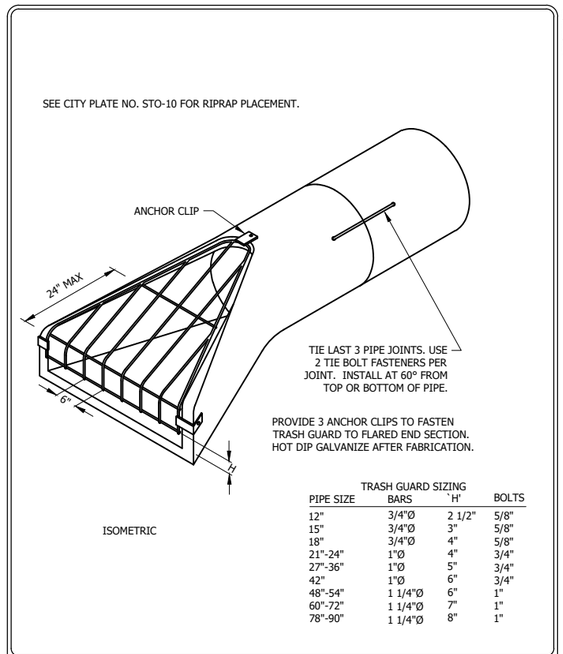

TRASH GUARD SIZING

PIPE SIZE	BARS	`H'	BOLTS
12"	3/4"Ø	2 1/2"	5/8"
15"	3/4"Ø	3"	5/8"
18"	3/4"Ø	4"	5/8"
21"-24"	1"Ø	4"	3/4"
27"-36"	1"Ø	5"	3/4"
42"	1"Ø	6"	3/4"
48"-54"	1 1/4"Ø	6"	1"
60"-72"	1 1/4"Ø	7"	1"
78"-90"	1 1/4"Ø	8"	1"

Stantec
2335 Highway 36 W
St. Paul, MN 55113
www.stantec.com

FLARED END SECTION AND TRASH GUARD

CHASKA, MINNESOTA

LAST REVISION: FEB. 1995

PLATE NO. STO–10

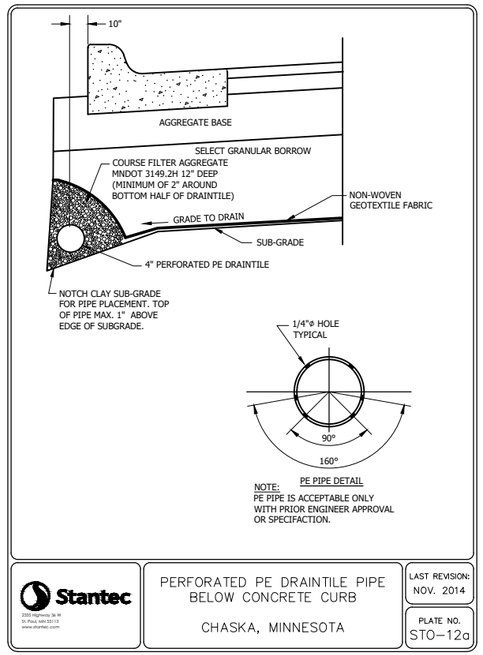

NOTE: PE PIPE IS ACCEPTABLE ONLY WITH PRIOR ENGINEER APPROVAL OR SPECIFACTION.

Stantec
2335 Highway 36 W
St. Paul, MN 55113
www.stantec.com

PERFORATED PE DRAINTILE PIPE BELOW CONCRETE CURB

CHASKA, MINNESOTA

LAST REVISION: NOV. 2014

PLATE NO. STO–12a

Stantec
733 Marquette Avenue, Suite 1000
Minneapolis, MN 55402
www.stantec.com

I HEREBY CERTIFY THAT THIS PLAN, SPECIFICATION, OR REPORT WAS PREPARED BY ME OR UNDER MY DIRECT SUPERVISION AND THAT I AM A DULY LICENSED PROFESSIONAL ENGINEER UNDER THE LAWS OF THE STATE OF MINNESOTA.

PRINT NAME: ERIC S. LEMBKE

SIGNATURE:

DATE:

LIC. NO. 42748

PRELIMINARY 10%

CITY OF CHASKA, MINNESOTA
2022 DOWNTOWN RECONSTRUCTION
STORM SEWER
STANDARD DETAILS

NO	REVISION	DATE

SURVEY	PWR
DRAWN	BJ/BF/JP/PJW
DESIGNED	ESL
CHECKED	KPA
APPROVED	ESL
PROJ. NO.	193805454

SHEET NUMBER
C8.03

THE CONTRACTOR SHALL VERIFY AND BE RESPONSIBLE FOR ALL DIMENSIONS. DO NOT SCALE THE DRAWING - ANY ERRORS OR OMISSIONS SHALL BE REPORTED TO STANTEC WITHOUT DELAY. ALL REPORTS, PLANS, OR DRAWINGS ARE THE PROPERTY OF STANTEC. REPRODUCTION OR USE FOR ANY PURPOSE OTHER THAN THAT AUTHORIZED BY STANTEC IS FORBIDDEN.

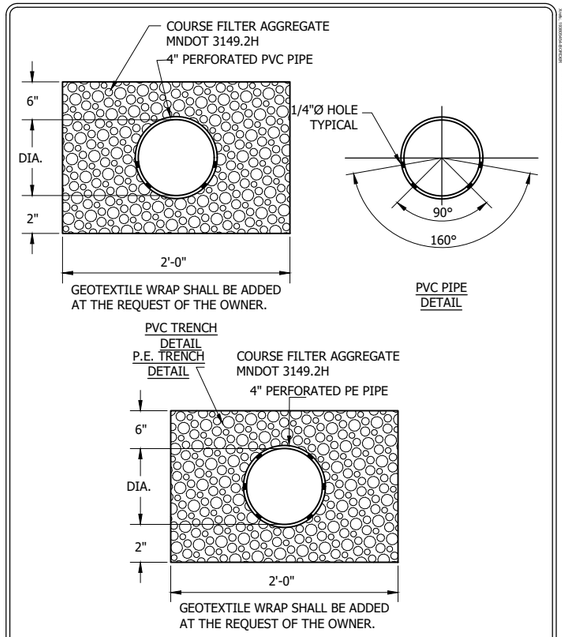

Stantec
2335 Highway 36 W
St. Paul, MN 55113
www.stantec.com

PERFORATED PIPE
TRENCH DETAIL

CHASKA, MINNESOTA

LAST REVISION: NOV. 2014

PLATE NO. STO–13

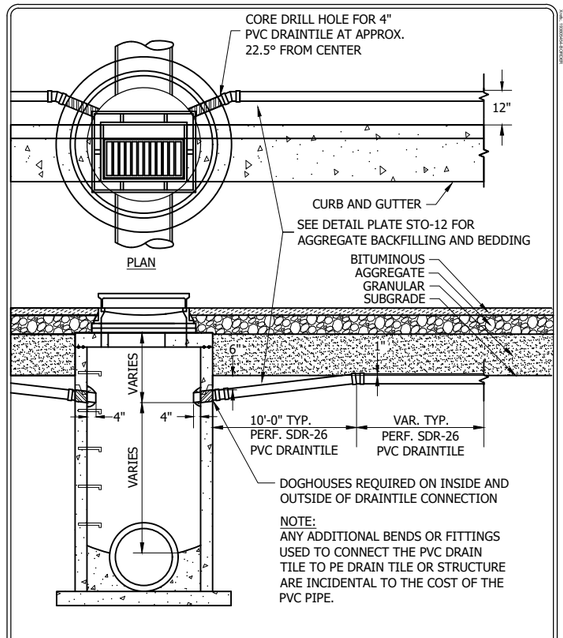

NOTE:
ANY ADDITIONAL BENDS OR FITTINGS USED TO CONNECT THE PVC DRAIN TILE TO PE DRAIN TILE OR STRUCTURE ARE INCIDENTAL TO THE COST OF THE PVC PIPE.

Stantec
2335 Highway 36 W
St. Paul, MN 55113
www.stantec.com

DRAINTILE INSTALLATION INTO
CATCHBASIN MANHOLE

CHASKA, MINNESOTA

LAST REVISION: APRIL 2016

PLATE NO. STO–14

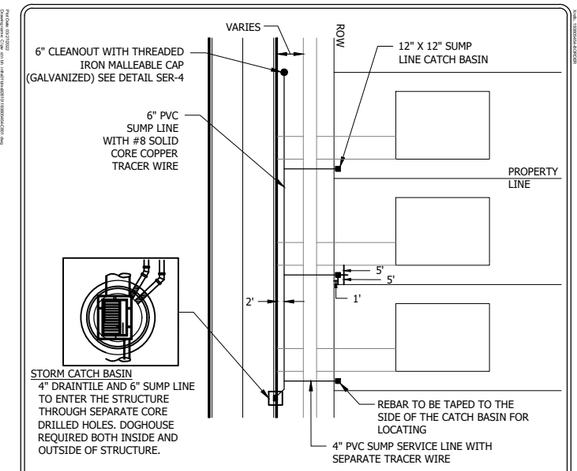

NOTES:
1. 6" PVC SUMP LINE TO BE INSTALLED 2' BELOW GRADE AND TO BE CORE DRILLED INTO NEAREST DOWNSTREAM CATCH BASIN.
2. EXTEND 4" PVC SUMP SERVICE FROM MAIN TO RIGHT OF WAY.
3. ALTERNATE CONFIGURATIONS ONLY WITH THE APPROVAL OF OWNER.
4. SEE ENGINEERING GUIDELINES OR SPECIFICATIONS FOR ADDITIONAL INFORMATION.
5. MAXIMUM SUMP LINE LENGTH 300'. IF LONGER SUMP LINE IS NECESSARY, INTERMEDIATE CLEANOUTS WILL BE REQUIRED EVERY 200'.
6. INSTALL 4" X 4" POST ADJACENT TO EACH SUMP CATCH BASIN FOR PROTECTION DURING CONSTRUCTION.
7. CLEAN OUT TO BE PLACED ON PROPERTY LINE AT END OF LAST SERVICE LINE. IF SERVICE FALLS IN DRIVEWAY THE MAINLINE WILL BE EXTENDED BEYOND DRIVEWAY/ALLEY TO ENSURE THE CLEANOUT IS IN GREEN SPACE.
8. A SEPARATE TRACER WIRE WILL EXTEND FROM THE FINISHED GRADE CLEANOUT LOCATION WITH TRACER WIRE BOX AND FOLLOW THE SUMP LINE TO THE STRUCTURE LOCATION.

Stantec
2335 Highway 36 W
St. Paul, MN 55113
www.stantec.com

PVC SUMP LINE
BEHIND CURB

CHASKA, MINNESOTA

LAST REVISION: MAY 2016

PLATE NO. STO–15

CONCRETE MATERIALS AS FOLLOWS:
3F52 - MANUAL PLACEMENT
3F32 - SLIP FORM PLACEMENT

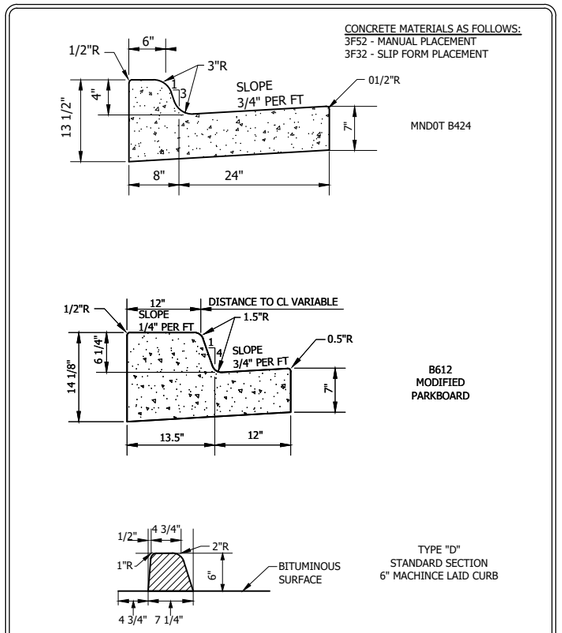

Stantec
2335 Highway 36 W
St. Paul, MN 55113
www.stantec.com

NON STARDARD CURB AND GUTTER

CHASKA, MINNESOTA

LAST REVISION: APRIL 2016

PLATE NO. STR–1A

CONCRETE MATERIALS AS FOLLOWS:
3F52 - MANUAL PLACEMENT
3F32 - SLIP FORM PLACEMENT

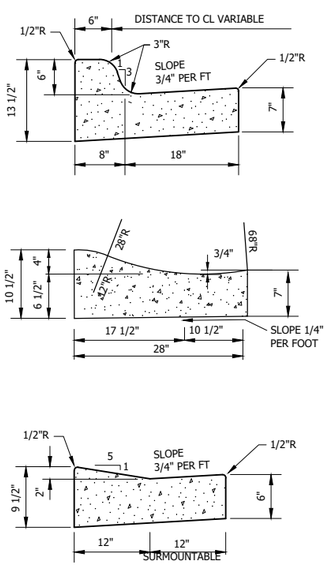

Stantec
2335 Highway 36 W
St. Paul, MN 55113
www.stantec.com

CURB AND GUTTER

CHASKA, MINNESOTA

LAST REVISION: APRIL 2016

PLATE NO. STR–1

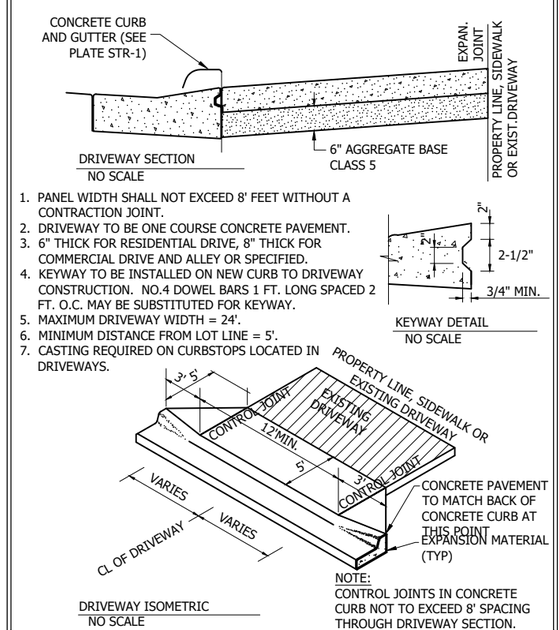

1. PANEL WIDTH SHALL NOT EXCEED 8' FEET WITHOUT A CONTRACTION JOINT.
2. DRIVEWAY TO BE ONE COURSE CONCRETE PAVEMENT.
3. 6" THICK FOR RESIDENTIAL DRIVE, 8" THICK FOR COMMERCIAL DRIVE AND ALLEY OR SPECIFIED.
4. KEYWAY TO BE INSTALLED ON NEW CURB TO DRIVEWAY CONSTRUCTION. NO.4 DOWEL BARS 1 FT. LONG SPACED 2 FT. O.C. MAY BE SUBSTITUTED FOR KEYWAY.
5. MAXIMUM DRIVEWAY WIDTH = 24'.
6. MINIMUM DISTANCE FROM LOT LINE = 5'.
7. CASTING REQUIRED ON CURBSTOPS LOCATED IN DRIVEWAYS.

NOTE:
CONTROL JOINTS IN CONCRETE CURB NOT TO EXCEED 8' SPACING THROUGH DRIVEWAY SECTION.

Stantec
2335 Highway 36 W
St. Paul, MN 55113
www.stantec.com

CONCRETE DRIVEWAY APRON

CHASKA, MINNESOTA

LAST REVISION: APRIL 2016

PLATE NO. STR–2

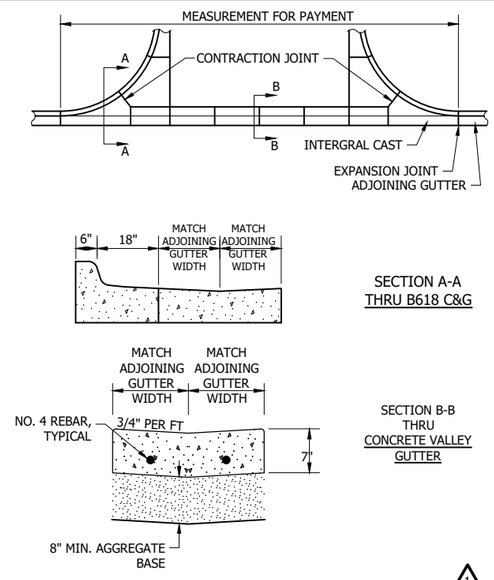

Stantec
2335 Highway 36 W
St. Paul, MN 55113
www.stantec.com

COMMERCIAL DRIVEWAY

CHASKA, MINNESOTA

LAST REVISION: APRIL 2016

PLATE NO. STR–3

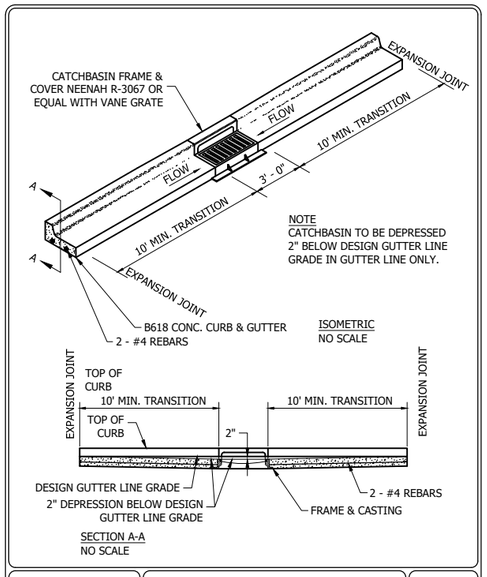

Stantec
2335 Highway 36 W
St. Paul, MN 55113
www.stantec.com

B618 CURB & GUTTER
CONSTRUCTION AT CATCHBASIN

CHASKA, MINNESOTA

LAST REVISION: MARCH 2008

PLATE NO. STR–4

Stantec
733 Marquette Avenue, Suite 1000
Minneapolis, MN 55402
www.stantec.com

I HEREBY CERTIFY THAT THIS PLAN, SPECIFICATION, OR REPORT WAS PREPARED BY ME OR UNDER MY DIRECT SUPERVISION AND THAT I AM A DULY LICENSED PROFESSIONAL ENGINEER UNDER THE LAWS OF THE STATE OF MINNESOTA.

PRINT NAME: ERIC. S. LEMBKE

SIGNATURE:

DATE:

LIC. NO. 42748

PRELIMINARY 10%

CITY OF CHASKA, MINNESOTA
2022 DOWNTOWN RECONSTRUCTION
ROADWAY
STANDARD DETAILS

NO	REVISION	DATE

SURVEY	PWR
DRAWN	BJ/BF/JP/PJW
DESIGNED	ESL
CHECKED	KPA
APPROVED	ESL
PROJ. NO.	193805454

SHEET NUMBER
C8.04

Date: 10/27/2022 - 8:54pm
Drawing: P:\193805454\CAD\Civil\Plan\Sh_Infrst01\dms\926101\193805454-C801.dwg
Layout: C8.04-STANDARD DETAILS
XREF: 193805454-XREF

THE CONTRACTOR SHALL VERIFY AND BE RESPONSIBLE FOR ALL DIMENSIONS. DO NOT SCALE THE DRAWING - ANY ERRORS OR OMISSIONS SHALL BE REPORTED TO STANTEC IMMEDIATELY. THE COPYRIGHTS TO ALL DESIGNS AND DRAWINGS ARE THE PROPERTY OF STANTEC. REPRODUCTION OR USE FOR ANY PURPOSE OTHER THAN THAT AUTHORIZED BY STANTEC IS FORBIDDEN.

NOTE: PLACE NEENAH CAST IRON UNCOATED TRUNCATED DOMES THE WIDTH OF OPENING.

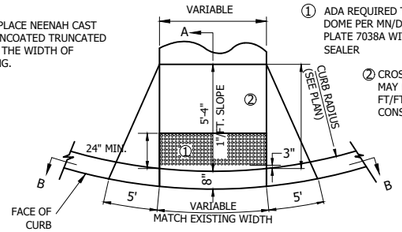

PLAN

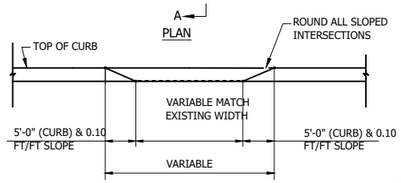

SECTION B-B

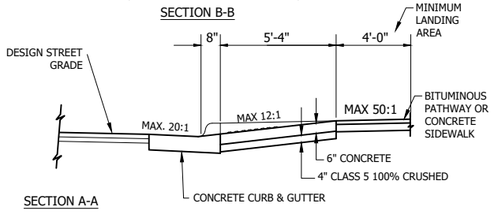

SECTION A-A

Stantec
2335 Highway 36 W
St. Paul, MN 55113
www.stantec.com

PEDESTRIAN CURB RAMP FOR PATHWAY/SIDEWALK

CHASKA, MINNESOTA

LAST REVISION: APRIL 2011

PLATE NO. STR–11

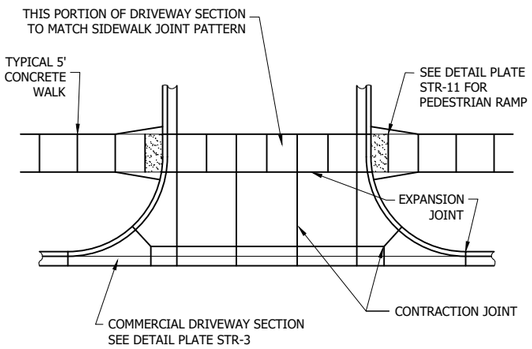

SEE DRIVEWAY DETAIL PLATE STR-2 FOR CONCRETE THICKNESS AND PANEL WIDTH

ADDITIONAL JOINTS MAY BE ADDED AT CONTRACTORS DISCRETION AND OWNERS APPROVAL

Stantec
2335 Highway 36 W
St. Paul, MN 55113
www.stantec.com

TYPICAL SECTION FOR SIDEWALK ACROSS COMMERCIAL DRIVEWAY

CHASKA, MINNESOTA

LAST REVISION: APRIL 2016

PLATE NO. STR–12

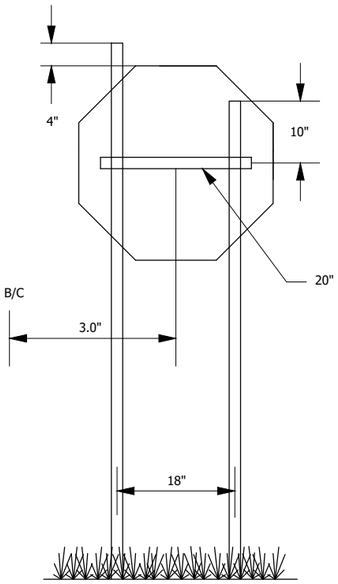

NOTES:
STOP SIGNS SHOULD BE INSTALLED 3' BEHIND B/C

ALL STOP SIGNS SHALL BE INSTALLED WITH TWO POSTS UNLESS APPROVED BY OWNER

Stantec
2335 Highway 36 W
St. Paul, MN 55113
www.stantec.com

STOP SIGN INSTALLATION DETAIL

CHASKA, MINNESOTA

LAST REVISION: JUNE 2012

PLATE NO. STR–15

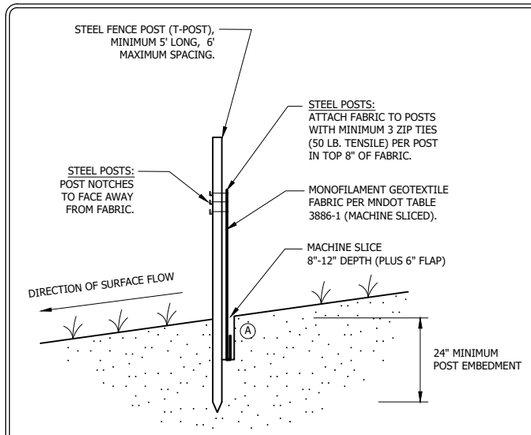

NOTE:
THE MACHINE SLICED METHOD (THIS DETAIL) IS THE STANDARD SILT FENCE INSTALLATION METHOD. HEAVY DUTY (ERO-1B) SILT FENCE INSTALLATION METHODS SHOULD ONLY BE USED WHEN APPROVED OR DIRECTED BY THE CITY.

Ⓐ COMPACTION:
AFTER "SLICING" IN THE FABRIC AND *BEFORE* INSTALLATION OF STEEL POSTS, DRIVE INSTALLATION EQUIPMENT OVER THE "SLICE" WHILE FABRIC IS LAYING ON THE GROUND. *THEN* INSTALL THE POSTS AND PULL UP FABRIC TO ATTACH AT A UNIFORM HEIGHT.

Stantec
2335 Highway 36 W
St. Paul, MN 55113
www.stantec.com

SILT FENCE MACHINE SLICED

CHASKA, MN

LAST REVISION: APRIL 2011

PLATE NO. ERO–1A

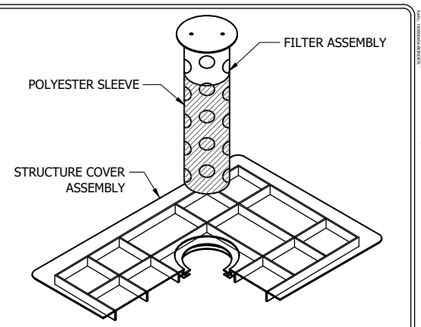

ISOMETRIC VIEW

DEVICES TO BE INSTALLED IMMEDIATELY UPON INSTALLATION OF CONCRETE STRUCTURE OR TOP SLAB.

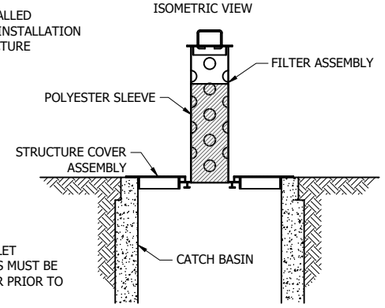

NOTE: ALL OTHER INLET PROTECTION DEVICES MUST BE APPROVED BY OWNER PRIOR TO INSTALLATION.

IN-PLACE ELEVATION VIEW

Stantec
2335 Highway 36 W
St. Paul, MN 55113
www.stantec.com

INLET PROTECTION FOR CATCH BASIN BEFORE CURB CONSTRUCTION

CHASKA, MINNESOTA

LAST REVISION: APRIL 2008

PLATE NO. ERO–4A

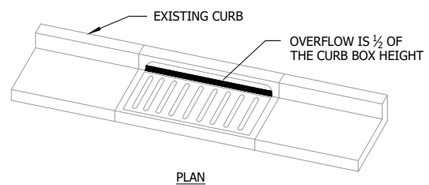

PLAN

WIMCO ROAD DRAIN CG-23* HIGH FLOW INLET PROTECTION CURB AND GUTTER MODEL OR CITY APPROVED EQUAL.

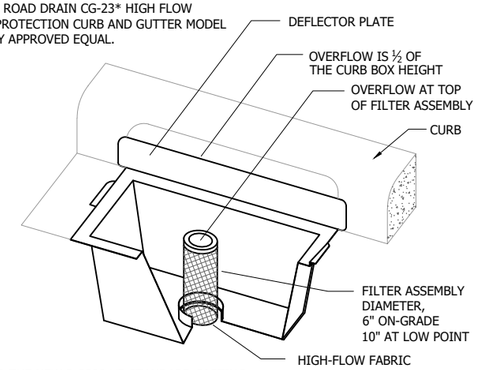

* FOR THE NEW R-3290-VB STANDARD CASTING, INSTALL WIMCO ROAD DRAIN CG-3290 OR CITY APPROVED EQUAL.

Stantec
2335 Highway 36 W
St. Paul, MN 55113
www.stantec.com

INLET PROTECTION – CATCH BASIN INSERT AFTER CURB CONSTRUCTION

CHASKA, MINNESOTA

LAST REVISION: APRIL 2008

PLATE NO. ERO–4B

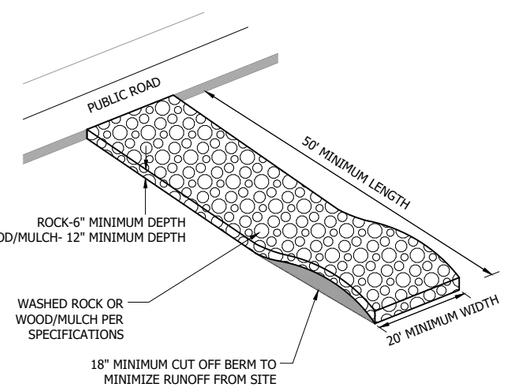

NOTES:
1. MnDOT 3733 TYPE 4 FILTER FABRIC SHALL BE PLACED UNDER ROCK OR MULCH TO STOP MUD MIGRATION THROUGH MATERIAL.
2. FUGITIVE ROCK OR MULCH WILL BE REMOVED FROM ADJACENT ROADWAYS DAILY OR MORE FREQUENTLY AS NECESSARY.
3. CONSTRUCTION ENTRANCE MUST BE CONSTRUCTED PRIOR TO THE COMMENCEMENT OF GRADING OPERATIONS ON THE SITE.
4. THE ENTRANCE MUST BE MAINTAINED IN PROPER CONDITION TO PREVENT TRACKING OF MUD OFF THE SITE. THIS MAY REQUIRE PERIODIC TOPDRESSING WITH ADDITIONAL ROCK, WOOD/MULCH, OR REMOVAL AND REINSTALLATION OF THE PAD.
5. THIS ENTRANCE WILL BE USED BY ALL VEHICLES ENTERING OR LEAVING THE PROJECT.
6. THE CONSTRUCTION ENTRANCE WILL BE REMOVED PRIOR TO THE PLACEMENT OF BITUMINOUS SURFACING.

Stantec
2335 Highway 36 W
St. Paul, MN 55113
www.stantec.com

ROCK CONSTRUCTION ENTRANCE

CHASKA, MINNESOTA

LAST REVISION: APRIL 2008

PLATE NO. ERO–7

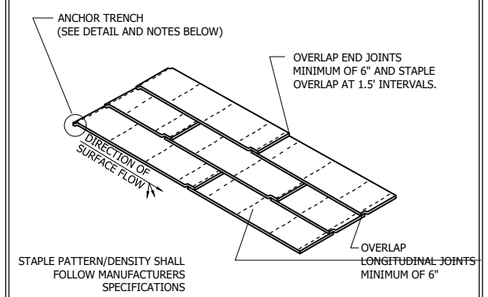

ANCHOR TRENCH
1. DIG 6" X 6" TRENCH
2. LAY BLANKET IN TRENCH
3. STAPLE AT 1.5' INTERVALS
4. BACKFILL WITH NATURAL SOIL AND COMPACT
5. BLANKET LENGTH SHALL NOT EXCEED 100' WITHOUT AN ANCHOR TRENCH

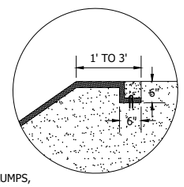

NOTE:
SLOPE SURFACE SHALL BE FREE OF ROCKS, SOIL CLUMPS, STICKS, VEHICLE IMPRINTS, AND GRASS. BLANKETS SHALL HAVE GOOD SOIL CONTACT.

Stantec
2335 Highway 36 W
St. Paul, MN 55113
www.stantec.com

EROSION CONTROL BLANKET INSTALLATION

CHASKA, MINNESOTA

LAST REVISION: APRIL 2008

PLATE NO. ERO–2

Stantec
733 Marquette Avenue, Suite 1000
Minneapolis, MN 55402
www.stantec.com

I HEREBY CERTIFY THAT THIS PLAN, SPECIFICATION, OR REPORT WAS PREPARED BY ME OR UNDER MY DIRECT SUPERVISION AND THAT I AM A DULY LICENSED PROFESSIONAL ENGINEER UNDER THE LAWS OF THE STATE OF MINNESOTA.

PRINT NAME: ERIC S. LEMBKE

SIGNATURE:

DATE:

LIC. NO. 49748

PRELIMINARY 10%

CITY OF CHASKA, MINNESOTA

2022 DOWNTOWN RECONSTRUCTION

EROSION CONTROL
STANDARD DETAILS

NO	REVISION	DATE

SURVEY	PWR
DRAWN	BJ/BF/JP/PJW
DESIGNED	ESL
CHECKED	KPA
APPROVED	ESL
PROJ. NO.	193805454

SHEET NUMBER
C8.05

Date: 3/17/2022 - 8:54pm
Drawing: P:\193805454\CAD\Civil\Plans\Sheets\C8.05.dwg
Layout: C8.05
Xrefs: C8.05-ORDER

THE CONTRACTOR SHALL VERIFY AND BE RESPONSIBLE FOR ALL DIMENSIONS. DO NOT SCALE THE DRAWING - ANY ERRORS OR OMISSIONS SHALL BE REPORTED TO STANTEC WITHOUT DELAY. THE COPYRIGHTS TO ALL DESIGNS AND DRAWINGS ARE THE PROPERTY OF STANTEC. REPRODUCTION OR USE FOR ANY PURPOSE OTHER THAN THAT AUTHORIZED BY STANTEC IS FORBIDDEN.

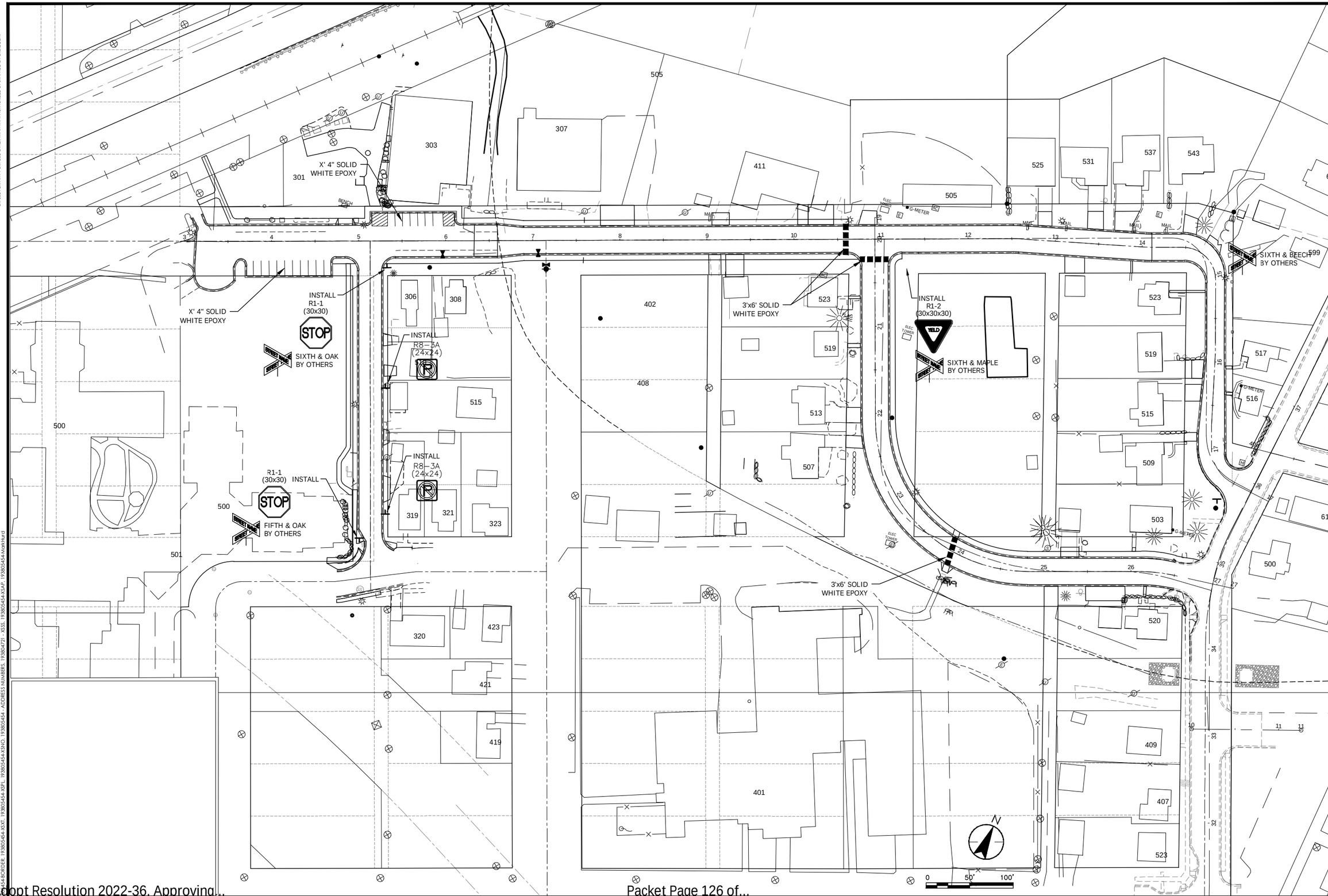

Stantec
733 Marquette Avenue, Suite 1000
Minneapolis, MN 55402
www.stantec.com

I HEREBY CERTIFY THAT THIS PLAN, SPECIFICATION, OR REPORT WAS PREPARED BY ME OR UNDER MY DIRECT SUPERVISION AND THAT I AM A DULY LICENSED PROFESSIONAL ENGINEER UNDER THE LAWS OF THE STATE OF MINNESOTA.

PRINT NAME: ERIC S. LEMBKE

SIGNATURE:

DATE:

LIC. NO. 49248

PRELIMINARY 10%

CITY OF CHASKA, MINNESOTA

2022 DOWNTOWN RECONSTRUCTION

SIGNAGE AND STRIPING

NO	REVISION	DATE

SURVEY	PWR
DRAWN	BJ/BF/JP/PJW
DESIGNED	ESL
CHECKED	KPA
APPROVED	ESL
PROJ. NO.	193805454

SHEET NUMBER
T9.01

THE CONTRACTOR SHALL VERIFY AND BE RESPONSIBLE FOR ALL DIMENSIONS. DO NOT SCALE THE DRAWING - ANY ERRORS OR OMISSIONS SHALL BE REPORTED TO STANTEC WITHOUT DELAY. THE COPYRIGHTS TO ALL DESIGNS AND DRAWINGS ARE THE PROPERTY OF STANTEC. REPRODUCTION OR USE FOR ANY PURPOSE OTHER THAN THAT AUTHORIZED BY STANTEC IS FORBIDDEN.

EXISTING TOPOGRAPHIC SYMBOLS

- STORM SEWER APRON
- BASKETBALL POST
- BARRICADE PERMANENT
- BENCH — BENCH
- BOOSTER STATION
- LO — BUILDING LOWEST OPENING
- BCM — BURIAL CONTROL MONUMENT
- BUSH DECIDUOUS
- CATCH BASIN BEEHIVE
- CURB BOX
- CATCH BASIN
- COLUMN
- CON — CONTROL BOX SIGNAL
- CO — CLEAN OUT (SEWER)
- CLVT — CULVERT END
- DRINKING FOUNTAIN
- ENERGY DISSIPATER
- FLAG — FLAG POLE
- FUEL PUMP
- GUY WIRE
- GRILL — GRILL
- HANDICAP SPACE
- H — HANDHOLE
- FIRE HYDRANT
- HYDRANT PVMNT MARKER (REFLECTOR)
- HYDRANT VALVE
- INLET (SMALL DIA.)
- CP — LIFT STATION CONTROL PANEL
- DWO — LIFT STATION DRY WELL
- LS — LIFT STATION WET WELL
- LIGHT YARD
- LOOP DETECTOR
- MAIL — MAIL BOX
- MAIL RELAY BOX
- AR — MANHOLE-AIR RELEASE
- H — MANHOLE-HEAT
- G — MANHOLE-GAS
- E — MANHOLE-POWER
- SS — MANHOLE-SANITARY SEWER
- S — MANHOLE-STORM SEWER
- C — MANHOLE-COMMUNICATIONS
- ? — MANHOLE-UNKNOWN
- W — MANHOLE-WATER
- METER POWER
- G-METER — METER GAS
- OHWM — ORDINARY HIGH WATER MARK
- CONTROL — OUTLET CONTROL STRUCTURE
- PARKING METER
- PED — PEDESTRIAN PUSH BUTTON
- E — PEDESTAL POWER
- CTV — PEDESTAL CATV
- C — PEDESTAL COMMUNICATIONS
- POST INDICATOR VALVE
- POLE-COMMUNICATIONS
- POLE-GUY
- POLE-LIGHT
- POLE-POWER
- POLE-UTILITY
- POLE-UTILITY SERVICE
- POST
- PROPANE TANK — PROPANE TANK
- PICNIC TABLE
- SAMPLING WELL — SAMPLING WELL
- ROCK — ROCK
- RR — RR SIGNAL CONTROL BOX
- RR GATE — RR CROSSING GATE
- RR SIGNAL
- G-REG — REGULATION STATION GAS
- SATELLITE DISH
- SEP — SEPTIC TANK
- SEPTIC VENT — SEPTIC VENT
- SEPTIC — SEPTIC DRAIN FIELD
- SIGN
- SOIL BORING
- G-PIPE — STAND PIPE GAS
- SPIGOT WATER
- SPRINKLER — SPRINKLER HEAD
- IVB — SPRINKLER VALVE BOX
- STUMP
- G-SER — SERVICE-GAS POINT ON LINE
- S-SER — SERVICE-SANITARY SEWER POINT ON LINE
- ST-SER — SERVICE-STORM SEWER POINT ON LINE
- W-SER — SERVICE-WATER POINT ON LINE
- TELEPHONE BOOTH
- ELEC TOWER — TRANSMISSION TOWER ELECTRIC
- TEST PIT — TEST PIT LOC
- TR — TRACER WIRE BOX
- TRAN — TRANSFORMER POWER
- TREE DEAD
- TREE-CONIFEROUS
- TREE-DECIDUOUS
- TREE-FRUIT
- TRASH — TRASH CAN
- TRAFFIC SIGNAL
- GAS — VALVE GAS
- VALVE
- G-VENT — VENT GAS
- WATER REDUCER
- WETLAND
- SAMPLING WELL — WELL-MONITORING
- WELL — WELL-WATER

SURVEY SYMBOLS

- AIR CONTROL — AERIAL CONTROL POINT
- BS — BACKSIGHT CONTROL POINT
- GPS CONTROL POINT
- JLM — JUDICIAL LAND MONUMENT
- M — MONUMENT COMPUTED
- MONUMENT IRON FOUND
- MONUMENT IRON SET
- R — RESECTED POINT
- ROW MONUMENT
- R/W POST — ROW MARKER POST
- SECTION CORNER
- TS — TRAVERSE CONTROL POINT
- BM — BENCH MARK LOCATION

NEW TOPOGRAPHIC SYMBOLS

- BOLLARD
- SANITARY CLEANOUT
- MANHOLE
- SANITARY OR STORM LIFT STATION
- STORM SEWER BEEHIVE CATCH BASIN
- STORM SEWER CATCH BASIN
- STORM SEWER FLARED END SECTION
- STORM SEWER OUTLET STRUCTURE
- STORM SEWER OVERFLOW STRUCTURE
- CURB BOX
- FIRE HYDRANT
- WATER REDUCER
- VALVE
- RIP RAP
- DRAINAGE FLOW
- PEDESTRIAN RAMP

EXISTING PRIVATE UTILITY LINES

- CTV-D — CABLE TV QUALITY LEVEL D
- CTV-C — CABLE TV QUALITY LEVEL C
- CTV-B — CABLE TV QUALITY LEVEL B
- CTV-A — CABLE TV QUALITY LEVEL A
- FO-D — FIBER OPTIC QUALITY LEVEL D
- FO-C — FIBER OPTIC QUALITY LEVEL C
- FO-B — FIBER OPTIC QUALITY LEVEL B
- FO-A — FIBER OPTIC QUALITY LEVEL A
- E-D — POWER QUALITY LEVEL D
- E-C — POWER QUALITY LEVEL C
- E-B — POWER QUALITY LEVEL B
- E-A — POWER QUALITY LEVEL A
- G-D — GAS QUALITY LEVEL D
- G-C — GAS QUALITY LEVEL C
- G-B — GAS QUALITY LEVEL B
- G-A — GAS QUALITY LEVEL A
- C-D — COMMUNICATION QUALITY LEVEL D
- C-C — COMMUNICATION QUALITY LEVEL C
- C-B — COMMUNICATION QUALITY LEVEL B
- C-A — COMMUNICATION QUALITY LEVEL A
- OHP — OVERHEAD POWER
- OHC — OVERHEAD COMMUNICATION
- OHU — OVERHEAD UTILITIES

EXISTING TOPOGRAPHIC LINES

- RETAINING WALL
- FENCE - BARBED WIRE
- FENCE - CHAIN LINK
- FENCE - DECORATIVE
- FENCE - STOCKADE
- FENCE - WOOD
- FENCE - ELECTRIC
- GUARD RAIL
- TREE LINE
- WETLAND

SURVEY LINES

- BOUNDARY
- NEW CENTERLINE
- EXISTING CENTERLINE
- EXISTING EASEMENT LINE
- NEW EASEMENT LINE
- FLOOD PLAIN BOUNDARY
- EXISTING LOT LINE
- NEW LOT LINE
- EXISTING RIGHT-OF-WAY
- NEW RIGHT-OF-WAY
- SETBACK LINE

EXISTING UTILITY LINES

- FM — FORCE MAIN
- SANITARY SEWER
- SANITARY SERVICE
- STORM SEWER
- WATER MAIN
- WATER SERVICE

NEW UTILITY LINES

- FM — FORCE MAIN
- SANITARY SEWER
- SANITARY SERVICE
- STORM SEWER DRAINTILE
- STORM SEWER
- WATER MAIN
- WATER SERVICE
- PIPE CASING

FUTURE UTILITY LINES

- FM — FORCE MAIN
- SANITARY SEWER
- SANITARY SERVICE
- STORM SEWER DRAINTILE
- STORM SEWER
- WATER MAIN
- WATER SERVICE
- PIPE CASING

CONCRETE CURB AND GUTTER

- EXISTING
- NEW
- FUTURE
- DEMOLITION

GRADING INFORMATION

- 952 / 950 — EXISTING CONTOUR MINOR
- EXISTING CONTOUR MAJOR
- 952 — NEW CONTOUR MINOR
- 950 — NEW CONTOUR MAJOR
- NEW GRADING LIMITS / SLOPE LIMITS
- 744.40 × 745.47 × STA:5+67.19 980.87 — NEW SPOT ELEVATION
- 743.21 × 743.78 — EXISTING SPOT ELEVATION
- 4:1 — RUN:RISE (SLOPE)

ABBREVIATIONS

AD	ALGEBRAIC DIFFERENCE
BV	BUTTERFLY VALVE
BVCE	BEGIN VERTICAL CURVE ELEVATION
BVCS	BEGIN VERTICAL CURVE STATION
℄	CENTER LINE
CL.	CLASS
CMP	CORRUGATED METAL PIPE
C.O.	CHANGE ORDER
DIP	DUCTILE IRON PIPE
EL/ELEV	ELEVATION
EVCE	END VERTICAL CURVE ELEVATION
EVCS	END VERTICAL CURVE STATION
EX	EXISTING
FES	FLARED END SECTION
F/F	FACE TO FACE
FM	FORCE MAIN
F.O.	FIELD ORDER
GV	GATE VALVE
HP	HIGH POINT
HWL	HIGH WATER LEVEL
INV	INVERT
K	CURVE COEFFICIENT
LP	LOW POINT
MH	MANHOLE (SANITARY)
NTS	NOT TO SCALE
NWL	NORMAL WATER LEVEL
PC	POINT OF CURVE
PCC	COMPOUND CURVE
PI	POINT OF INTERSECTION
PL	PROPERTY LINE
PPVC	PERFORATED POLYVINYL CHLORIDE PIPE
PRC	POINT OF REVERSE CURVE
PT	POINT OF TANGENT
PVC	POLYVINYL CHLORIDE PIPE
PVI	POINT OF VERTICAL INTERSECTION
R	RADIUS
RCP	REINFORCED CONCRETE PIPE
R/W	RIGHT-OF-WAY
SS	STORM SEWER STRUCTURE
STA	STATION
TCE	TEMPORARY CONSTRUCTION EASEMENT
TNH	TOP NUT HYDRANT
TYP	TYPICAL
VC	VERTICAL CURVE
WM	WATER MAIN

HATCH PATTERNS

EXISTING	NEW	DEMOLITION	SECTION
CONCRETE	CONCRETE	CONCRETE DWY/WALK	EARTH
ASPHALT ROAD/DWY	ASPHALT ROAD/DWY	ASPHALT ROAD/DWY	ROCK
PAVERS	PAVERS	PAVERS	SAND
			GRAVEL

Stantec
733 Marquette Avenue, Suite 1000
Minneapolis, MN 55402
www.stantec.com

I HEREBY CERTIFY THAT THIS PLAN, SPECIFICATION, OR REPORT WAS PREPARED BY ME OR UNDER MY DIRECT SUPERVISION AND THAT I AM A DULY LICENSED PROFESSIONAL ENGINEER UNDER THE LAWS OF THE STATE OF MINNESOTA.

PRINT NAME: ERIC. S. LEMBKE

SIGNATURE:

DATE:

LIC. NO. 47248

BID SET

CITY OF CHASKA, MINNESOTA
YELLOW BRICK ROAD UTILITIES IMPROVEMENTS
PLAN LEGEND
GENERAL

NO	REVISION	DATE

SURVEY	PR/PW/EB
DRAWN	BF
DESIGNED	ESL
CHECKED	ND
APPROVED	ESL
PROJ. NO.	193805454

SHEET NUMBER
G0.02B

PLOT Date: 10/30/2022 - 12:10pm
Drawing: n:\193805454_chaska_bh_infra\01.cd\ms\99920119380\xxxx-G002.dwg
XREFS: 99920119380xxxx-BORDER

THE CONTRACTOR SHALL VERIFY AND BE RESPONSIBLE FOR ALL DIMENSIONS. DO NOT SCALE THE DRAWING - ANY ERRORS OR OMISSIONS SHALL BE REPORTED TO STANTEC WITHOUT DELAY. THE COPYRIGHTS TO ALL DESIGNS AND DRAWINGS ARE THE PROPERTY OF STANTEC. REPRODUCTION OR USE FOR ANY PURPOSE OTHER THAN THAT AUTHORIZED BY STANTEC IS FORBIDDEN.

DRAINAGE TABULATION

STRUCTURE NUMBER	DRAINAGE STRUCTURES		CITY DETAIL	CASTING STYLE NEENAH # OR EQUAL	NOTES
	TYPE	CATCH BASIN (2'x3')			
		EACH			
EXMH-2				R-1642	INSTALL NEW CASTING AND RINGS
CB-1	CB	1	STO-6	R-3067 V	CONNECT DRAINTILE
TOTAL		1			

F & I SIGN PANELS TYPE C

SIGN NO.	DESCRIPTION	WIDTH	HEIGHT	Total QTY	Total SF	Notes
R2-1	30 MPH SPEED LIMIT	24	30	1	5	
	TOTAL				**5.00**	

THE FOLLOWING STANDARD PLATES AS APPROVED BY THE FHWA SHALL APPLY ON THIS PROJECT

STANDARD PLATES

ITEM NUMBER	ITEM
3000M	REINFORCED CONCRETE PIPE (6 SHEETS)
3006H	GASKET JOINT FOR RC PIPE (2 SHEETS)
3145E	CONCRETE PIPE TIES
4011E	PRECAST CONCRETE BASE
7038A	DETECTABLE WARNING SURFACE TRUNCATED DOMES
8000J	CHANNELIZERS

BASIS OF QUANTITIES

MASS OF BITUMINOUS MATERIAL	110 lb / SY / inch depth
MASS OF AGGREGATE BASE	135 lb / ft^3
BITUMINOUS MATERIAL FOR TACK COAT	0.05 gal/yd^2
SEED MIX 21-151	180 lb/acre
FERTILIZER 24-12-24	400 lb/acre
MULCH TYPE 1	2 ton/acre

Stantec
733 Marquette Avenue, Suite 1000
Minneapolis, MN 55402
www.stantec.com

I HEREBY CERTIFY THAT THIS PLAN, SPECIFICATION, OR REPORT WAS PREPARED BY ME OR UNDER MY DIRECT SUPERVISION AND THAT I AM A DULY LICENSED PROFESSIONAL ENGINEER UNDER THE LAWS OF THE STATE OF MINNESOTA.

PRINT NAME: ERIC. S. LEMBKE

SIGNATURE:

DATE:

LIC. NO. 42748

BID SET

CITY OF CHASKA, MINNESOTA

YELLOW BRICK ROAD UTILITIES IMPROVEMENTS
TABULATIION, STANDARD PLATES, & BASIS OF QUANTITIES
GENERAL

NO	REVISION	DATE

SURVEY	PR/PW/EB
DRAWN	BF
DESIGNED	ESL
CHECKED	ND
APPROVED	ESL
PROJ. NO.	193805454

SHEET NUMBER
G0.03B

Date: 2/23/2022 - 12:14pm
Drawing: C:\Users\eric.lembke\AppData\Local\Temp\acpublish_1316\acad31\d.mms99920119380\xxxx-G003.dwg
Layout: G0.03B
Xrefs: 193805-EXPORT

THE CONTRACTOR SHALL VERIFY AND BE RESPONSIBLE FOR ALL DIMENSIONS. DO NOT SCALE THE DRAWING - ANY ERRORS OR OMISSIONS SHALL BE REPORTED TO STANTEC WITHOUT DELAY. THE COPYRIGHTS TO ALL DESIGNS AND DRAWINGS ARE THE PROPERTY OF STANTEC. REPRODUCTION OR USE FOR ANY PURPOSE OTHER THAN THAT AUTHORIZED BY STANTEC IS FORBIDDEN.

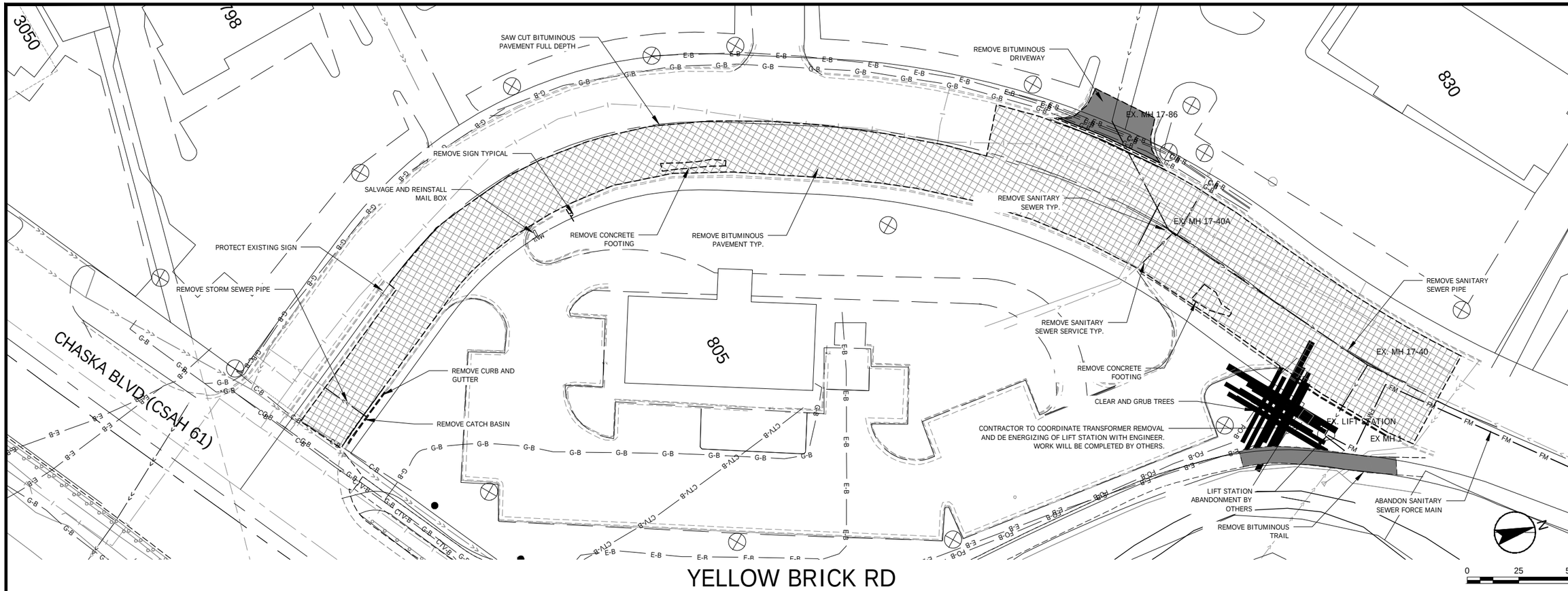

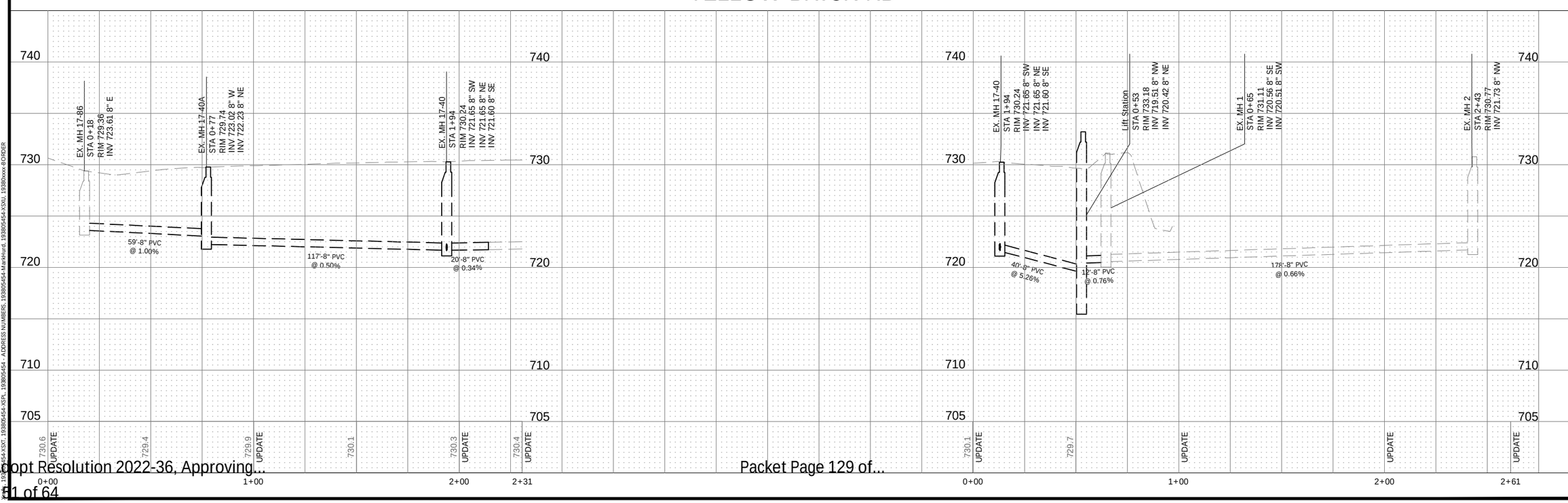

Stantec
733 Marquette Avenue, Suite 1000
Minneapolis, MN 55402
www.stantec.com

I HEREBY CERTIFY THAT THIS PLAN, SPECIFICATION, OR REPORT WAS PREPARED BY ME OR UNDER MY DIRECT SUPERVISION AND THAT I AM A DULY LICENSED PROFESSIONAL ENGINEER UNDER THE LAWS OF THE STATE OF MINNESOTA.

PRINT NAME: ERIC. S. LEMBKE

SIGNATURE:

DATE:

LIC. NO. 42748

BID SET

CITY OF CHASKA, MINNESOTA

YELLOW BRICK ROAD UTILITIES IMPROVEMENTS
EXISITING CONDITIONS AND REMOVALS
YELLOW BRICK ROAD

NO	REVISION	DATE

SURVEY	PR/PW/EB
DRAWN	BF
DESIGNED	ESL
CHECKED	ND
APPROVED	ESL
PROJ. NO.	193805454

SHEET NUMBER
C0.01B

Date: 9/30/2022 - 12:21pm
Layout: C0.01B - Existing Conditions and Removals
Xrefs: 193805454-XSYL, 193805454-XSR, 193805454 - ADDRESS NUMBERS, 193805454-MarkHurd, 193805454-XS01, 19380xxxx-BORDER

THE CONTRACTOR SHALL VERIFY AND BE RESPONSIBLE FOR ALL DIMENSIONS. DO NOT SCALE THE DRAWING. ANY ERRORS OR OMISSIONS SHALL BE REPORTED TO STANTEC WITHOUT DELAY. THE COPYRIGHTS TO ALL DESIGNS AND DRAWINGS ARE THE PROPERTY OF STANTEC. REPRODUCTION OR USE FOR ANY PURPOSE OTHER THAN THAT AUTHORIZED BY STANTEC IS FORBIDDEN.

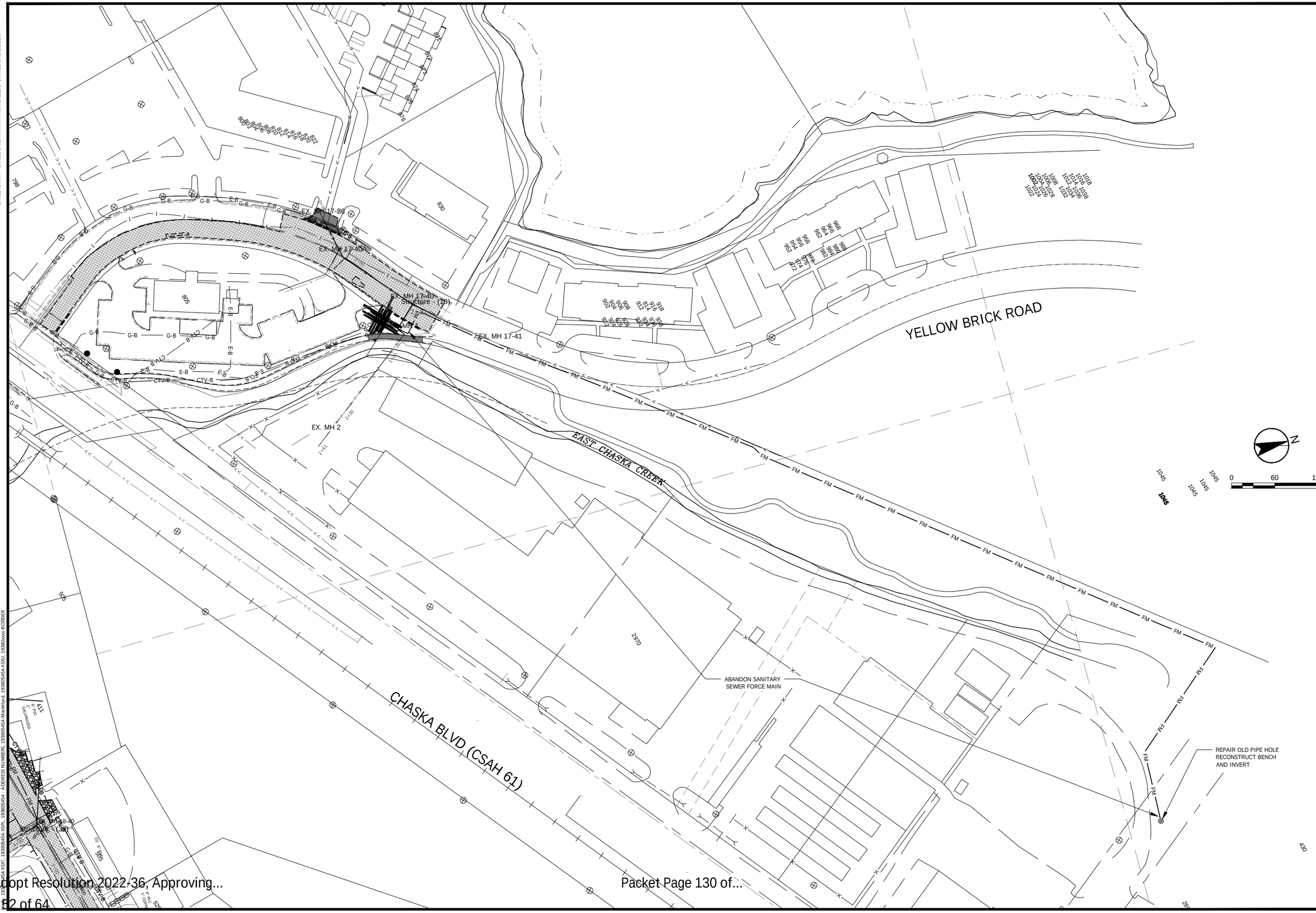

Stantec
733 Marquette Avenue, Suite 1000
Minneapolis, MN 55402
www.stantec.com

I HEREBY CERTIFY THAT THIS PLAN, SPECIFICATION, OR REPORT WAS PREPARED BY ME OR UNDER MY DIRECT SUPERVISION AND THAT I AM A DULY LICENSED PROFESSIONAL ENGINEER UNDER THE LAWS OF THE STATE OF MINNESOTA.

PRINT NAME: ERIC. S. LEMBKE

SIGNATURE:

DATE:

LIC. NO. 42748

BID SET

CITY OF CHASKA, MINNESOTA

YELLOW BRICK ROAD UTILITIES IMPROVEMENTS

EXISITING CONDITIONS AND REMOVALS

YELLOW BRICK ROAD

NO	REVISION	DATE

SURVEY	PR/PW/EB
DRAWN	BF
DESIGNED	ESL
CHECKED	ND
APPROVED	ESL
PROJ. NO.	193805454

SHEET NUMBER

C0.01B

THE CONTRACTOR SHALL VERIFY AND BE RESPONSIBLE FOR ALL DIMENSIONS. DO NOT SCALE THE DRAWING - ANY ERRORS OR OMISSIONS SHALL BE REPORTED TO STANTEC WITHOUT DELAY. ALL REPORTS, PLANS & DATA ARE THE PROPERTY OF STANTEC. REPRODUCTION OR USE FOR ANY PURPOSE OTHER THAN THAT AUTHORIZED BY STANTEC IS FORBIDDEN.

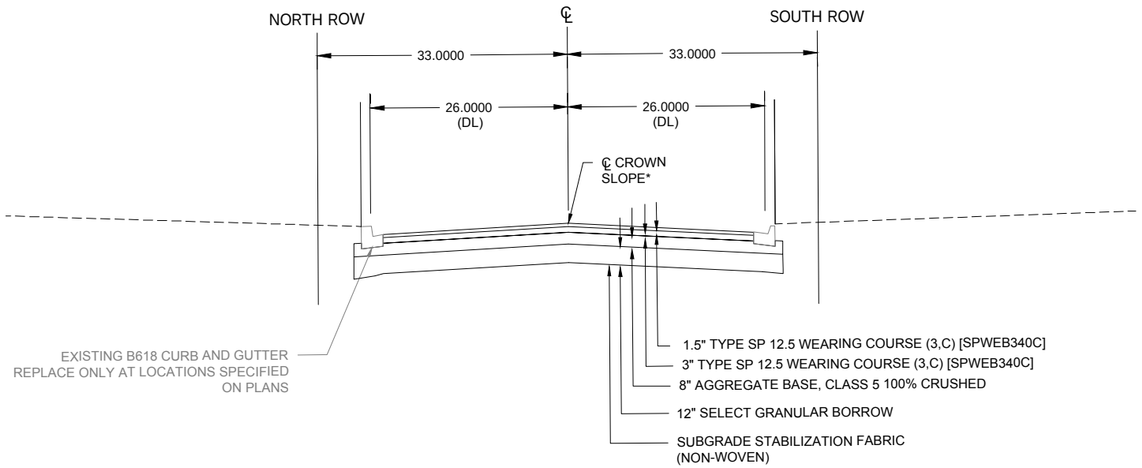

TYPICAL SECTION
YELLOW BRICK ROAD(11+05 - 14+05)

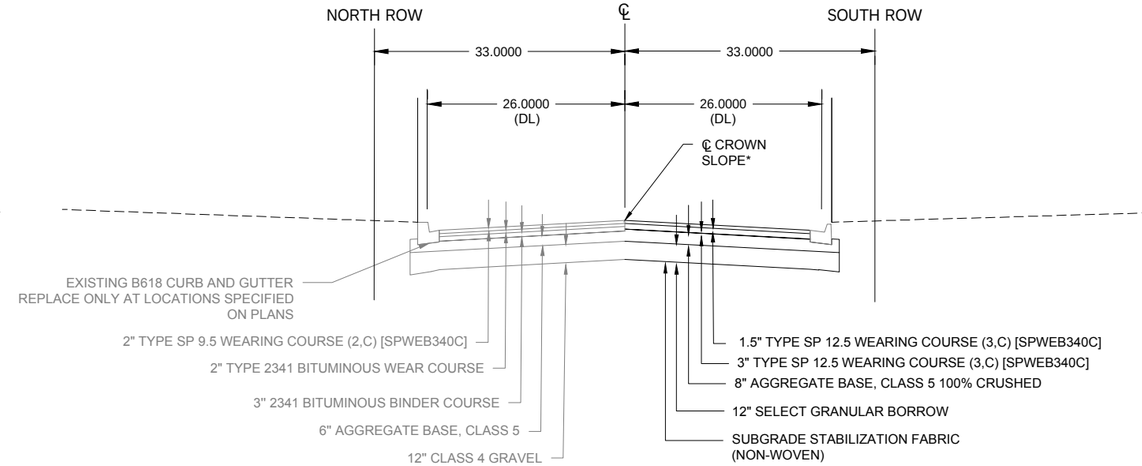

TYPICAL SECTION
YELLOW BRICK ROAD (7+59 - 11+05)

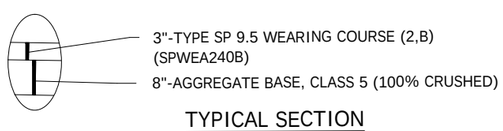

TYPICAL SECTION
BITUMINOUS TRAIL

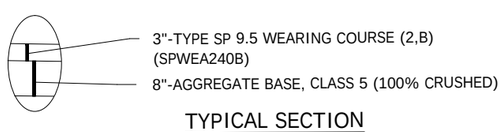

TYPICAL SECTION
BITUMINOUS DRIVEWAY

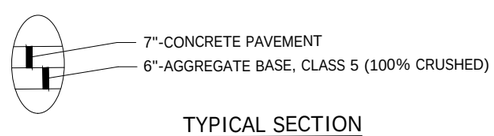

TYPICAL SECTION
COMMERCIAL CONCRETE DRIVEWAY

GENERAL NOTES:

1. CROSS SLOPE VARIES ON STREETS AND BOULEVARDS. CONTRACTOR TO MATCH EXISTING CURB AND ROADWAY.
2. SIDEWALK & BOULEVARD WIDTHS VARIES. (SEE C600s SHEET)
3. AGGREGATE BASE & SELECT GRANULAR BASE SHALL EXTEND 1.0' BEYOND BACK OF CURB.

GENERAL TOPSOIL NOTES:

1. HYDROMULCH AND BLANKETED AREAS TO RECEIVE 6" OF LOAM TOPSOIL BORROW, SCREENED & PULVERIZED.
2. CONTRACTOR SHALL SALVAGE REINSTALL EXISTING TOPSOIL PER SPECIFICATIONS FOR THE USE OF RESTORATION PRIOR TO THE IMPORT OF MATERIAL FOR THESE AREAS.

Stantec
733 Marquette Avenue, Suite 1000
Minneapolis, MN 55402
www.stantec.com

I HEREBY CERTIFY THAT THIS PLAN, SPECIFICATION, OR REPORT WAS PREPARED BY ME OR UNDER MY DIRECT SUPERVISION AND THAT I AM A DULY LICENSED PROFESSIONAL ENGINEER UNDER THE LAWS OF THE STATE OF MINNESOTA.

PRINT NAME: ERIC. S. LEMBKE

SIGNATURE:

DATE:

LIC. NO. 42748

BID SET

CITY OF CHASKA, MINNESOTA
YELLOW BRICK ROAD UTILITIES IMPROVEMENTS
TYPICAL SECTIONS
YELLOW BRICK ROAD

NO	REVISION	DATE
1	ADD. 1	6/11/21

SURVEY	PR/PW/EB
DRAWN	BF
DESIGNED	ESL
CHECKED	ND
APPROVED	ESL
PROJ. NO.	193805454

SHEET NUMBER
C1.01B

Date: 03/30/2022 - 1:07pm
Cad file: J:\193805454\Civil\Plans\Infra01\Imp\193805xxx-C101.dwg
Layout: 1B(C1.01B) Xref: 193805xxx-BORDER, 193805xxx-TB, 193805xxx-XREF, 193805xxx-XSKO, 020-052 CHASKA 41 LANDSCAPE BASE 5ft, 193805xxx-BORDER

THE CONTRACTOR SHALL VERIFY AND BE RESPONSIBLE FOR ALL DIMENSIONS. DO NOT SCALE THE DRAWING - ANY ERRORS OR OMISSIONS SHALL BE REPORTED TO STANTEC WITHOUT DELAY. THE COPYRIGHTS TO ALL DESIGNS AND DRAWINGS ARE THE PROPERTY OF STANTEC. REPRODUCTION OR USE FOR ANY PURPOSE OTHER THAN THAT AUTHORIZED BY STANTEC IS FORBIDDEN.

EROSION CONTROL LEGEND

- SILT FENCE
- BIOROLL
- FLOTATION SILT CURTAIN
- INLET PROTECTION
- DITCH CHECK - ROCK
- SOD
- CONSTRUCTION ENTRANCE / EXIT
- BLANKET W/25-131
- HYDROMULCH W/25-131

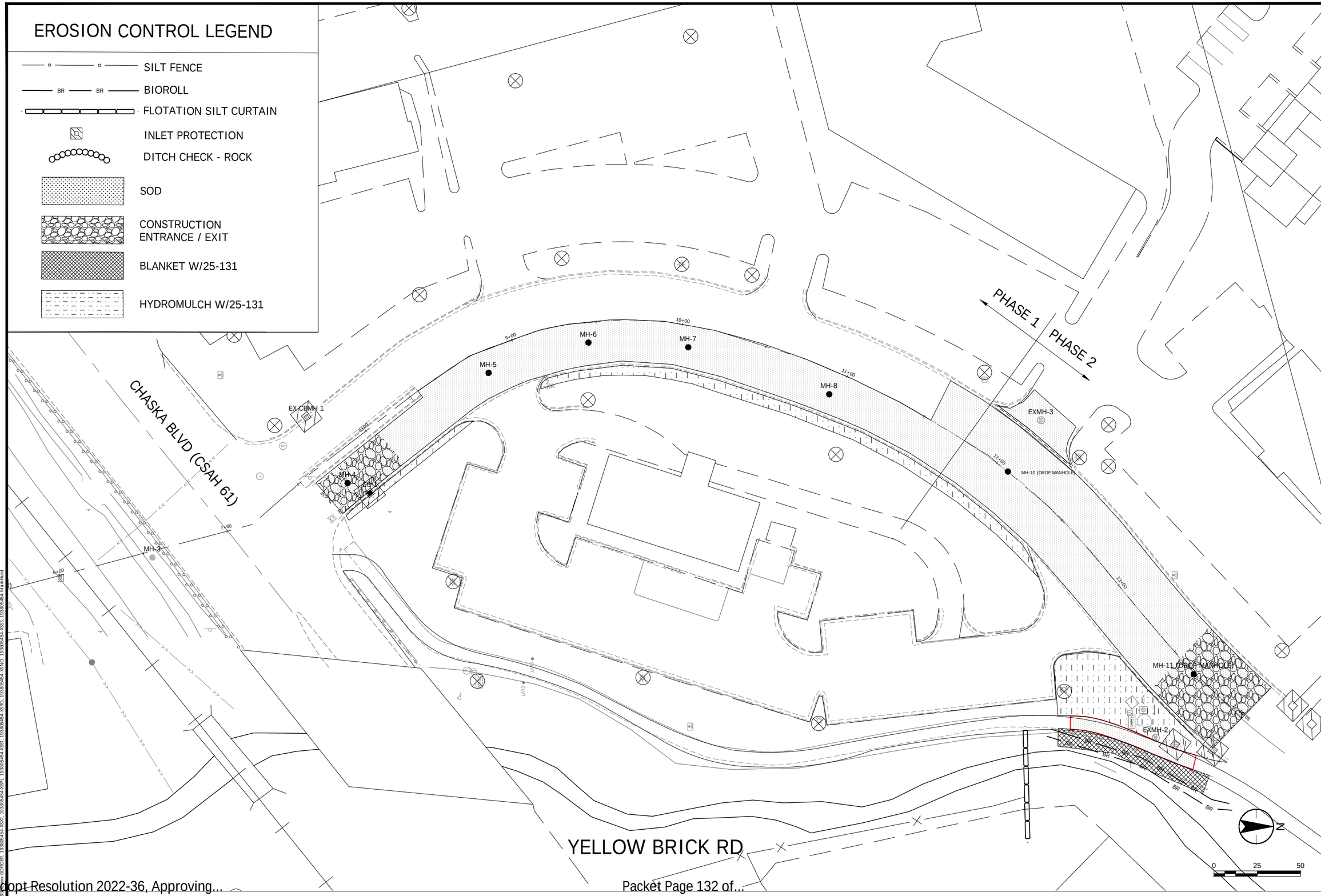

Stantec
733 Marquette Avenue, Suite 1000
Minneapolis, MN 55402
www.stantec.com

I HEREBY CERTIFY THAT THIS PLAN, SPECIFICATION, OR REPORT WAS PREPARED BY ME OR UNDER MY DIRECT SUPERVISION AND THAT I AM A DULY LICENSED PROFESSIONAL ENGINEER UNDER THE LAWS OF THE STATE OF MINNESOTA.

PRINT NAME: ERIC. S. LEMBKE

SIGNATURE: _____ LIC. NO. 42748

DATE: _____

BID SET

CITY OF CHASKA, MINNESOTA

YELLOW BRICK ROAD UTILITIES IMPROVEMENTS

EROSION CONTROL AND TURF ESTABLISHMENT

YELLOW BRICK ROAD

NO	REVISION	DATE

SURVEY	PR/PW/EB
DRAWN	BF
DESIGNED	ESL
CHECKED	ND
APPROVED	ESL
PROJ. NO.	193805454

SHEET NUMBER

C2.01B

Date: 12/30/2022 - 1:15pm
Xref(s): ...
Xref(s): ...
Xref(s): ...

THE CONTRACTOR SHALL VERIFY AND BE RESPONSIBLE FOR ALL DIMENSIONS. DO NOT SCALE THE DRAWING - ANY ERRORS OR OMISSIONS SHALL BE REPORTED TO STANTEC WITHOUT DELAY. THE COPYRIGHTS TO ALL DESIGNS AND DRAWINGS ARE THE PROPERTY OF STANTEC. REPRODUCTION OR USE FOR ANY PURPOSE OTHER THAN THAT AUTHORIZED BY STANTEC IS FORBIDDEN.

EROSION AND SEDIMENT CONTROL – CONSTRUCTION ACTIVITY REQUIREMENTS

CHAIN OF COMMAND

1. The contractor will need to identify a Mn/DOT certified erosion control supervisor in good standing who will be knowledgeable and experienced in the application of erosion prevention and sediment control best management practices.

2. The erosion control supervisor will work with the project engineer to oversee the implementation of the SWPPP, and the installation, inspection, and maintenance of the erosion prevention and sediment control bmps before and during construction.

3. The general contractor is responsible to comply with Part II.B, Part II.C, and Part IV of the construction stormwater permit.

4. The contractor will develop a chain of command with all operators on the site to ensure that the SWPPP will be implemented and stay in effect until the construction project is complete, the entire site has undergone final stabilization, and aNnotice of Termination (NOT) has been submitted to the MPCA.

CONTACT LIST

City Project Engineer - Matt Clark - (952) 448-4335
City Inspector - Brad Fasbender - (651) 238-0603
Contractor - Unknown
MPCA Contact - Thom Genelin - (952) 466-5259
Watershed District Contact - Paul Moline - (952) 361-1825

EROSION PREVENTION PRACTICES

1. Appropriate construction practices will be used to minimize erosion. Areas of non-disturbance will be delineated (e.g. with flags, stakes, signs, silt fence etc.) on the development site before work begins.

2. The contractor will stabilize all exposed soil areas as soon as possible to limit soil erosion but in no case later than (7) days after the construction activity in that portion of the site has temporarily or permanently ceased. temporary stockpiles without significant silt, clay or organic components and the constructed base components of roads, parking lots and similar surfaces are exempt from this requirement.

3. Work in drainage swales or the normal wetted perimeter of any surface water will require stabilization within 24 hours of connection. these areas will include all areas that drain water within 200 linear feet from the property edge or point of discharge to any surface water.

4. Outlets into surface waters shall be stabilized with energy dissipation within 24 hours.

5. All areas not being worked for a period of (7) days or more shall be temporary stabilized with the appropriate means to prevent soil loss.

SEDIMENT CONTROL PRACTICES

Sediment control devices must be established on all down gradient perimeters before any up gradient land disturbing activities begin. the timing of the installation of the sediment control devices can be adjusted to accommodate short-term activities such as clearing and grubbing, or passage of vehicles. any short term activity must be completed as quickly as possible and the sediment control devices must be installed immediately after the activity is completed or prior to the next rainfall event.

A. Silt fence shall be installed so that it follows as close as possible to a single contour to capture overland, low-velocity sheet flows downgradient of all exposed soils and prior to discharging to surface waters with the silt fence j-hooked at a maximum of 100 foot intervals and shall contain no more than 1/4 acre of drainage area.
B. Ditch checks will be installed as indicated on the plans during all phases of construction.
   - temporary ditch checks will consist of using rock ditch checks and rock weepers in front of culvert inlets.
   - biologs will be installed during permanent turf establishment at the intervals identified in the plan.
C. Sediment damage from stockpiles will be minimized by placing a row of silt fence 5 feet from the toe.
D. All stockpiles left for a period of 7 days shall be temporarily stabilized.
E. All storm drain inlets will be protected by appropriate BMPs during construction until all sources with potential for discharging to the inlet have been stabilized. Inlet protection will be removed for a particular inlet if a specific safety concern (street flooding/freezing) has been identified and written correspondence has been received from the jurisdictional authority verifying the need for removal. The written correspondence will be documented in Section P of the SWPPP or available within 72 hours upon request. If written correspondence can not be obtained in a timely manner, the specific inlet protection will be removed to alleviate immediate safety concerns. Efforts to obtain written correspondence will be documented in the SWPPP. Permission to remove inlet protection based on specific safety concerns will still be obtained from the jurisdictional authority within 30 days of removal

Vehicle tracking of sediment from the construction site will be minimized using appropriate BMPs. Street sweeping will be used if such **BMPs** are not adequate to prevent sediment from being tracked onto the street

EROSION AND SEDIMENT CONTROL SEQUENCING

Grading and Utility - Silt fence, construction entrance, ditch checks and/or other suitable perimeter sediment control measures must be installed prior to the start of any grading or land disturbing activity. If needed, temporary stabilization must be established by seed and mulch, and erosion control blanket as specified in plan sheets within the required stabilization timeframes.

A sediment trap should be dug and stabilized prior to any upstream disturbance occuring.

After the pipe installation has occured, flocculent will be used at the outlet pipe, before the sediment trap to aid in filtering any sediment ladened water prior to its discharge downstream.

As soon as possible, final stabilization measures will be installed per the plans. Temporary measures will remain in place until all areas have reached final stabilization which is 70% annual vegetative cover or more.

Vehicle tracking of sediment from the construction site will be minimized using appropriate BMPs. Street sweeping will be used if such **BMPs** are not adequate to prevent sediment from being tracked onto the street

EROSION AND SEDIMENT CONTROL SEQUENCING

Grading and Utility - Silt fence, construction entrance, ditch checks and/or other suitable perimeter sediment control measures must be installed prior to the start of any grading or land disturbing activity. If needed, temporary stabilization must be established by seed and mulch, and erosion control blanket as specified in plan sheets within the required stabilization timeframes.

A sediment trap should be dug and stabilized prior to any upstream disturbance occuring.

After the pipe installation has occured, flocculent will be used at the outlet pipe, before the sediment trap to aid in filtering any sediment ladened water prior to its discharge downstream.

As soon as possible, final stabilization measures will be installed per the plans. Temporary measures will remain in place until all areas have reached final stabilization which is 70% annual vegetative cover or more.

DEWATERING AND BASIN DRAINING

Any dewatering or basin draining activities of turbid or sediment laden water must be discharged to a temporary or permanent sedimentation basin or treated with the appropriate BMP prior to entering surface waters. Energy dissipation will be provided at all discharge points. Dewatering or basin draining activities may not cause nuisance conditions, erosion in receiving channels or on downslope properties, or adversely impact wetlands. The Contractor will consult with Engineer/Owner to obtain approval prior to performing any dewatering.

POLLUTION PREVENTION MANAGEMENT MEASURES

Solid Waste: Collected sediment, asphalt and concrete millings, floating debris, paper, plastic, fabric, construction and demolition debris and other wastes must be disposed of properly and must comply with MPCA disposal requirements.

Hazardous Materials: Oil, gasoline, paint and any hazardous substances must be properly stored, including secondary containment, to prevent spills, leaks or other discharge. Restricted access to storage areas must be provided to prevent vandalism. Storage and disposal of hazardous waste must be in compliance with MPCA regulations.

External washing of trucks and other construction vehicles must be limited to a defined area of the site. Runoff must be contained and waste properly disposed of. Refer to Plans and corresponding legend for approved washout locations. No engine degreasing is allowed on site.

All liquid and solid wastes generated by concrete washout operations will be contained in a leak-proof containment facility or impermeable liner. A compacted clay liner that does not allow washout liquids to enter ground water is considered an impermeable liner. The liquid and solid wastes will not contact the ground, and there will not be runoff from the concrete washout operations or areas. Liquid and solid wastes will be disposed of properly and in compliance with MPCA regulations. A sign must be installed adjacent to each washout facility to inform concrete equipment operators to utilize the proper facilities.

INSPECTIONS AND MAINTENANCE

The City ("Owner") will conduct site inspections once every seven (7) days during active construction and within 24 hours after a rainfall event greater than 0.5 inches in 24 hours. Any corrective actions necessary will be provided to the contractor. Reports of the inspections shall be provided to the Contractor as they are completed. Inspections and maintenance records will be retained on site or in the inspectors vehicle with the SWPPP and available within 72 hours of request.

All silt fence or other sediment control practices must be repaired, replaced, or supplemented when they become nonfunctional or the sediment reaches 1/3 of the height of the fence. These repairs must be made within 24 hours of discovery, or as soon as field conditions allow access.

Construction site vehicle exit locations must be inspected for evidence of off-site sediment tracking onto paved surfaces. Tracked sediment must be removed from all off-site paved surfaces, within 24 hours of discovery.

Stantec
733 Marquette Avenue, Suite 1000
Minneapolis, MN 55402
www.stantec.com

I HEREBY CERTIFY THAT THIS PLAN, SPECIFICATION, OR REPORT WAS PREPARED BY ME OR UNDER MY DIRECT SUPERVISION AND THAT I AM A DULY LICENSED PROFESSIONAL ENGINEER UNDER THE LAWS OF THE STATE OF MINNESOTA.

PRINT NAME: ERIC. S. LEMBKE

SIGNATURE: _____

DATE: _____ LIC. NO. 42748

BID SET

CITY OF CHASKA, MINNESOTA
YELLOW BRICK ROAD UTILITIES IMPROVEMENTS
SWPPP
YELLOW BRICK ROAD

NO	REVISION	DATE

SURVEY	PR/PW/EB
DRAWN	BF
DESIGNED	ESL
CHECKED	ND
APPROVED	ESL
PROJ. NO.	193805454

SHEET NUMBER
C2.02B

THE CONTRACTOR SHALL VERIFY AND BE RESPONSIBLE FOR ALL DIMENSIONS. DO NOT SCALE THE DRAWING - ANY ERRORS OR OMISSIONS SHALL BE REPORTED TO STANTEC WITHOUT DELAY. THE COPYRIGHTS TO ALL DESIGNS AND DRAWINGS ARE THE PROPERTY OF STANTEC. REPRODUCTION OR USE FOR ANY PURPOSE OTHER THAN THAT AUTHORIZED BY STANTEC IS FORBIDDEN.

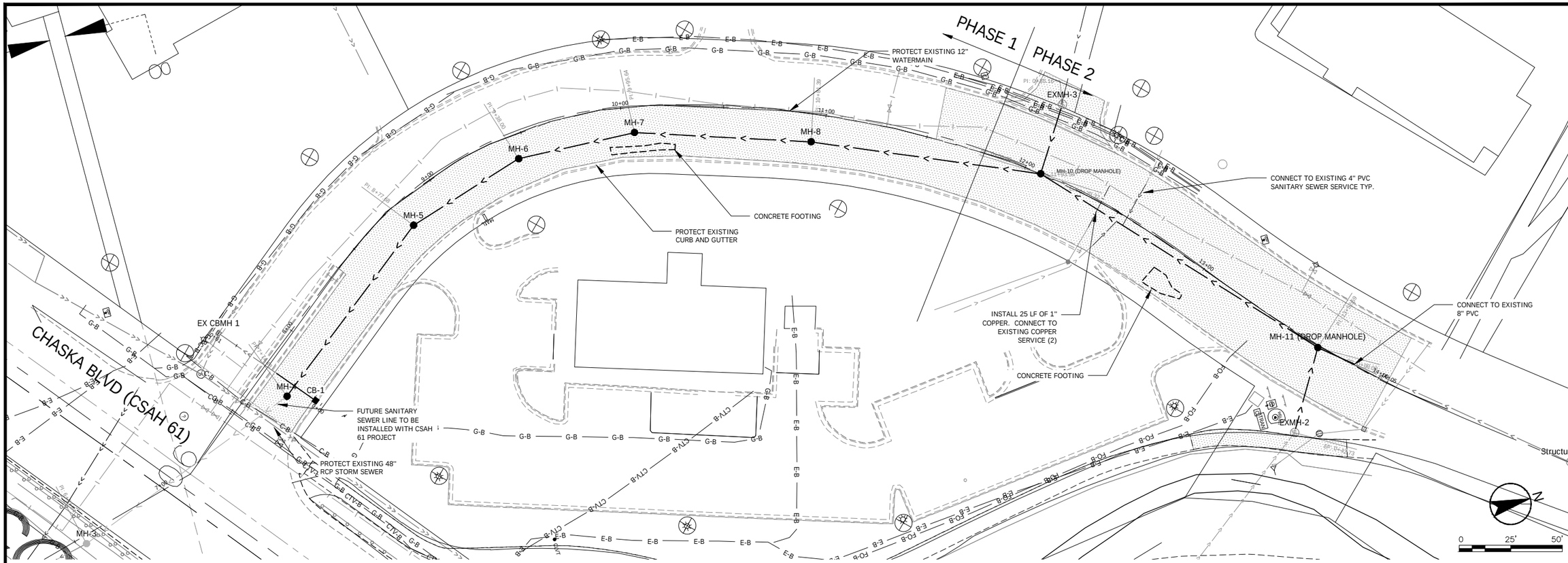

YELLOW BRICK RD

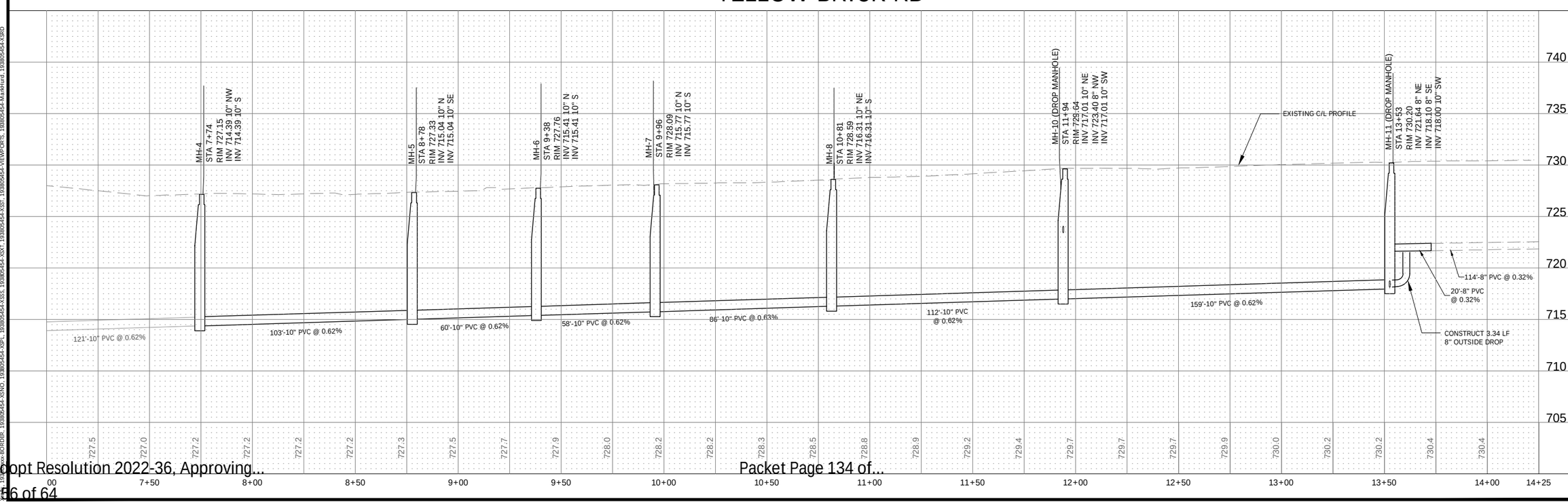

Stantec
733 Marquette Avenue, Suite 1000
Minneapolis, MN 55402
www.stantec.com

I HEREBY CERTIFY THAT THIS PLAN, SPECIFICATION, OR REPORT WAS PREPARED BY ME OR UNDER MY DIRECT SUPERVISION AND THAT I AM A DULY LICENSED PROFESSIONAL ENGINEER UNDER THE LAWS OF THE STATE OF MINNESOTA.

PRINT NAME: ERIC. S. LEMBKE

SIGNATURE:

DATE:

LIC. NO. 42748

BID SET

CITY OF CHASKA, MINNESOTA

YELLOW BRICK ROAD UTILITIES IMPROVEMENTS
SANITARY SEWER AND WATER MAIN IMPROVEMENTS
YELLOW BRICK ROAD

NO	REVISION	DATE

SURVEY	PR/PW/EB
DRAWN	BF
DESIGNED	ESL
CHECKED	ND
APPROVED	ESL
PROJ. NO.	193805454

SHEET NUMBER
C4.01B

THE CONTRACTOR SHALL VERIFY AND BE RESPONSIBLE FOR ALL DIMENSIONS. DO NOT SCALE THE DRAWING - ANY ERRORS OR OMISSIONS SHALL BE REPORTED TO STANTEC WITHOUT DELAY. THE COPYRIGHTS TO ALL DESIGNS AND DRAWINGS ARE THE PROPERTY OF STANTEC. REPRODUCTION OR USE FOR ANY PURPOSE OTHER THAN THAT AUTHORIZED BY STANTEC IS FORBIDDEN.

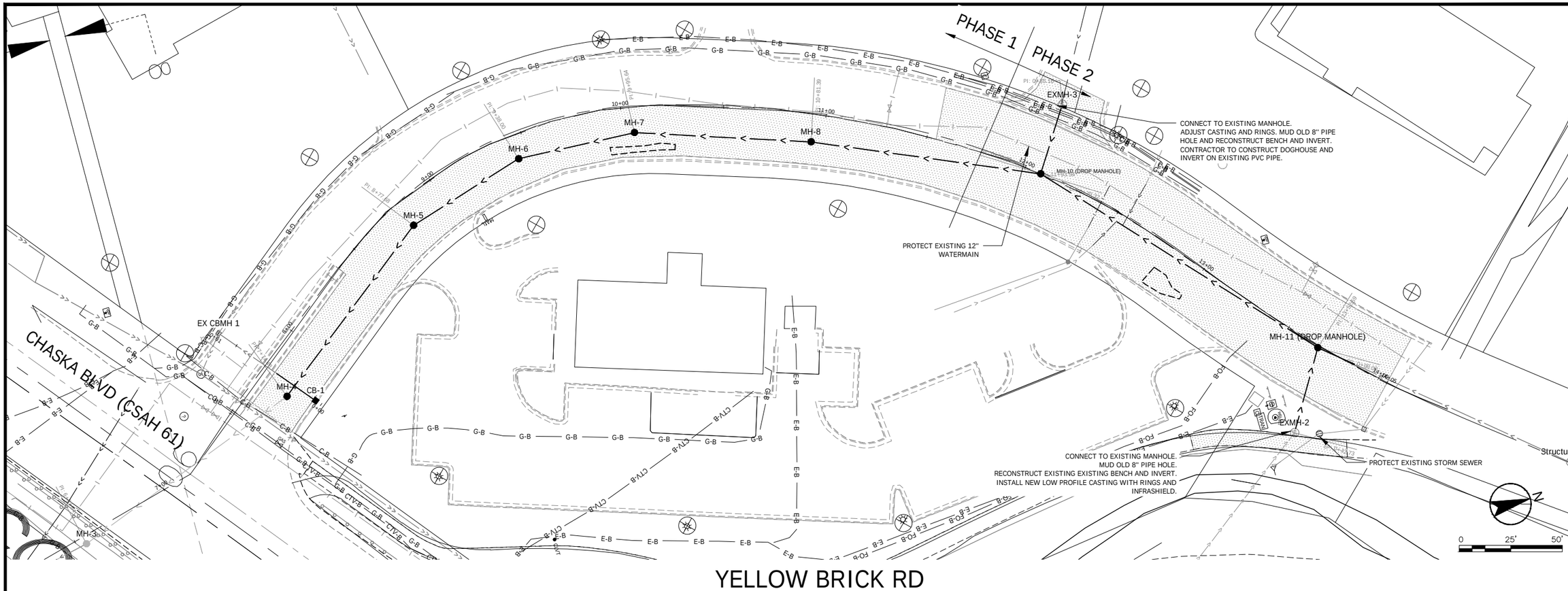

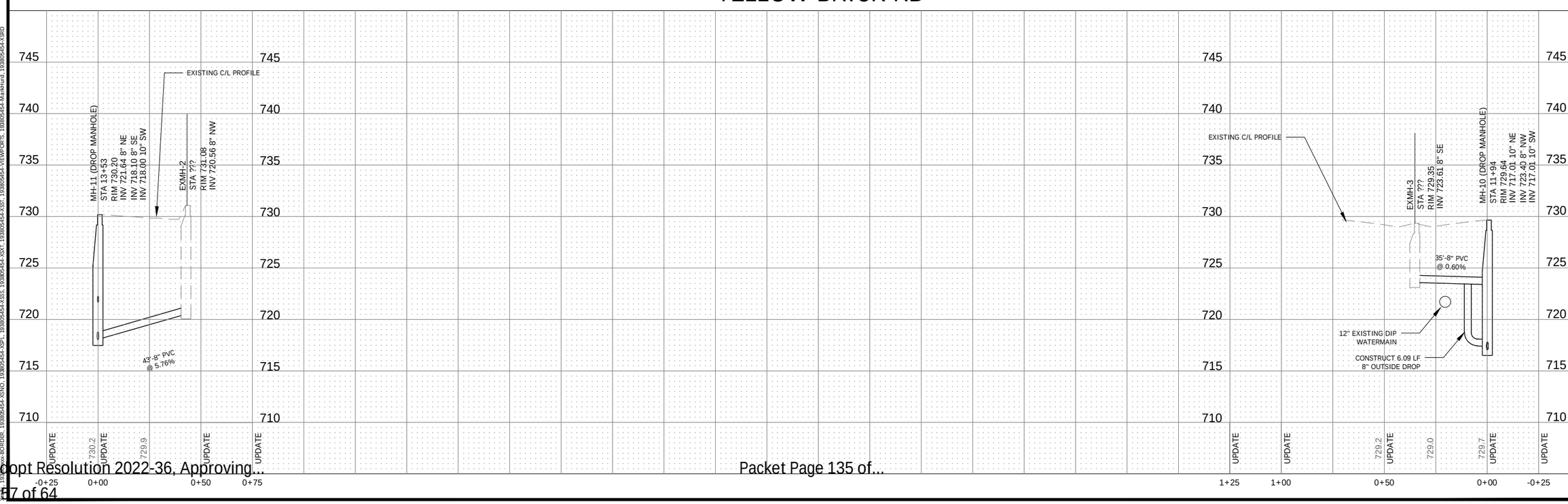

Stantec
733 Marquette Avenue, Suite 1000
Minneapolis, MN 55402
www.stantec.com

I HEREBY CERTIFY THAT THIS PLAN, SPECIFICATION, OR REPORT WAS PREPARED BY ME OR UNDER MY DIRECT SUPERVISION AND THAT I AM A DULY LICENSED PROFESSIONAL ENGINEER UNDER THE LAWS OF THE STATE OF MINNESOTA.

PRINT NAME: ERIC S. LEMBKE

SIGNATURE:

DATE:

LIC. NO. 42748

BID SET

CITY OF CHASKA, MINNESOTA

YELLOW BRICK ROAD UTILITIES IMPROVEMENTS
SANITARY SEWER AND WATER MAIN IMPROVEMENTS
YELLOW BRICK ROAD

NO	REVISION	DATE

SURVEY	PR/PW/EB
DRAWN	BF
DESIGNED	ESL
CHECKED	ND
APPROVED	ESL
PROJ. NO.	193805454

SHEET NUMBER
C4.02B

Date: 9/30/2022 - 1:31pm
User: brian.fredericks@stantec.com
Xref(s): 193805454-XBORDER, 193805454-XBND, 193805454-XPP1, 193805454-XSS, 193805454-XSXT, 193805454-XVEMPORTS, 193805454-MarkHard, 193805454-XSRD

THE CONTRACTOR SHALL VERIFY AND BE RESPONSIBLE FOR ALL DIMENSIONS. DO NOT SCALE THE DRAWING. ANY ERRORS OR OMISSIONS SHALL BE REPORTED TO STANTEC WITHOUT DELAY. ALL INSTRUMENTS OF SERVICE, INCLUDING BUT NOT LIMITED TO REPORTS, DRAWINGS AND SPECIFICATIONS, ARE THE PROPERTY OF STANTEC. REPRODUCTION OR USE FOR ANY PURPOSE OTHER THAN THAT AUTHORIZED BY STANTEC IS FORBIDDEN.

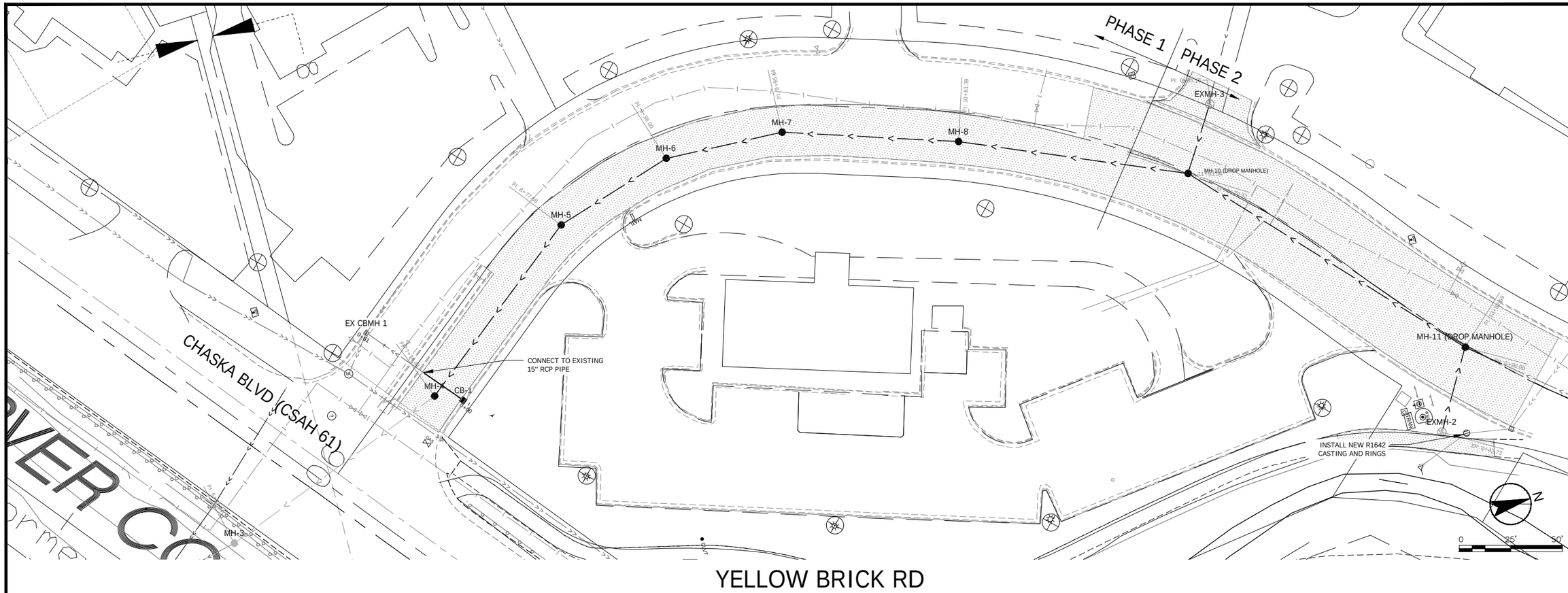

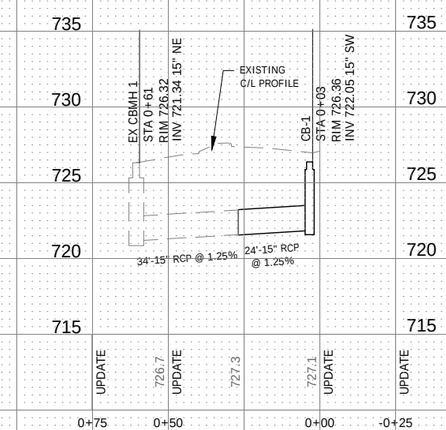

Stantec
733 Marquette Avenue, Suite 1000
Minneapolis, MN 55402
www.stantec.com

I HEREBY CERTIFY THAT THIS PLAN, SPECIFICATION, OR REPORT WAS PREPARED BY ME OR UNDER MY DIRECT SUPERVISION AND THAT I AM A DULY LICENSED PROFESSIONAL ENGINEER UNDER THE LAWS OF THE STATE OF MINNESOTA.

PRINT NAME: ERIC S. LEMBKE

SIGNATURE:

DATE:

LIC. NO. 47248

BID SET

CITY OF CHASKA, MINNESOTA

YELLOW BRICK ROAD UTILITIES IMPROVEMENTS
STORM SEWER IMPROVEMENTS
YELLOW BRICK ROAD

NO	REVISION	DATE

SURVEY	PR/PW/EB
DRAWN	BF
DESIGNED	ESL
CHECKED	ND
APPROVED	ESL
PROJ. NO.	193805454

SHEET NUMBER
C5.01B

Date: 10/30/2022 - 1:36pm
User: brian.fox@stantec.com
Name: Z:\1938\193805454\Civil\Drawings\Plan Sheets\C500series\C500.dwg
Xrefs: 193805454-XOPDB, 193805454-XSPI, 193805454-XSXT, 193805454-VIEWPORTS, 193805454-XSSS, 193805454-XSST, 193805454-XSNO, 193805454-MarkHurd

THE CONTRACTOR SHALL VERIFY AND BE RESPONSIBLE FOR ALL DIMENSIONS. DO NOT SCALE THE DRAWING - ANY ERRORS OR OMISSIONS SHALL BE REPORTED TO STANTEC WITHOUT DELAY. THE COPYRIGHTS TO ALL DESIGNS AND DRAWINGS ARE THE PROPERTY OF STANTEC. REPRODUCTION OR USE FOR ANY PURPOSE OTHER THAN THAT AUTHORIZED BY STANTEC IS FORBIDDEN.

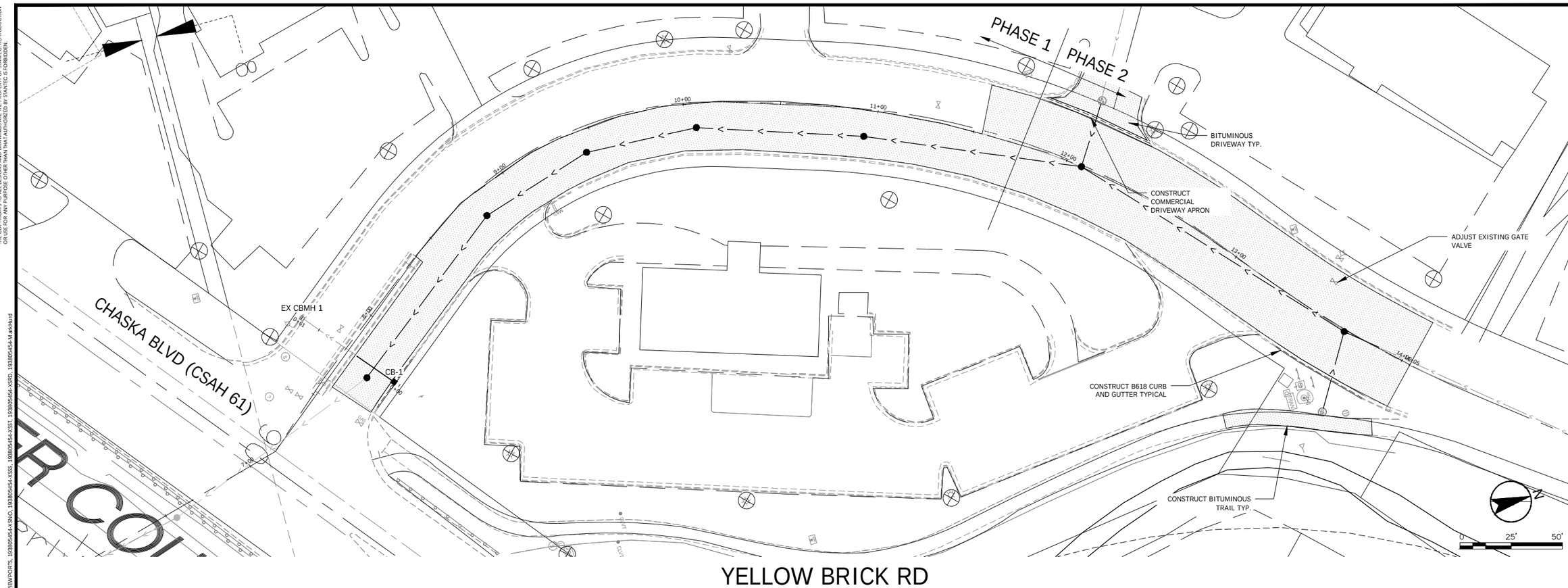

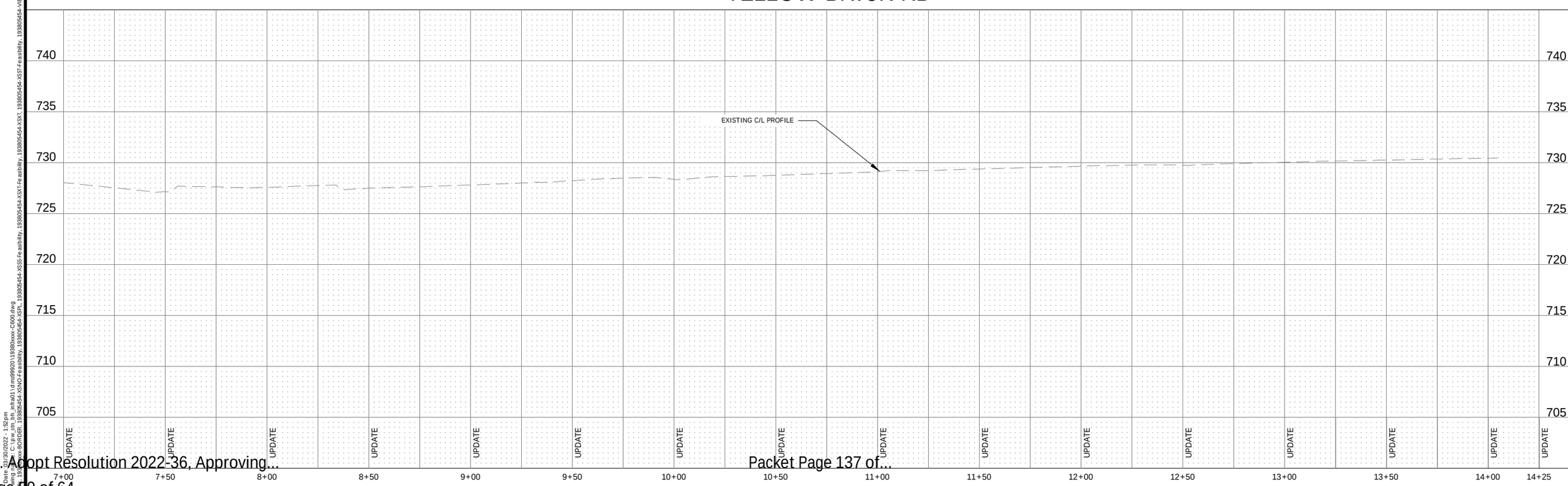

Stantec
733 Marquette Avenue, Suite 1000
Minneapolis, MN 55402
www.stantec.com

I HEREBY CERTIFY THAT THIS PLAN, SPECIFICATION, OR REPORT WAS PREPARED BY ME OR UNDER MY DIRECT SUPERVISION AND THAT I AM A DULY LICENSED PROFESSIONAL ENGINEER UNDER THE LAWS OF THE STATE OF MINNESOTA.

PRINT NAME: ERIC. S. LEMBKE

SIGNATURE:

DATE:

LIC. NO. 47248

BID SET

CITY OF CHASKA, MINNESOTA

YELLOW BRICK ROAD UTILITIES IMPROVEMENTS
ROADWAY IMPROVEMENTS
YELLOW BRICK ROAD

NO	REVISION	DATE

SURVEY	PR/PW/EB
DRAWN	BF
DESIGNED	ESL
CHECKED	ND
APPROVED	ESL
PROJ. NO.	193805454

SHEET NUMBER
C6.01B

THE CONTRACTOR SHALL VERIFY AND BE RESPONSIBLE FOR ALL DIMENSIONS. DO NOT SCALE THE DRAWING - ANY ERRORS OR OMISSIONS SHALL BE REPORTED TO STANTEC WITHOUT DELAY. THE COPYRIGHTS TO ALL DESIGNS AND DRAWINGS ARE THE PROPERTY OF STANTEC. REPRODUCTION OR USE FOR ANY PURPOSE OTHER THAN THAT AUTHORIZED BY STANTEC IS FORBIDDEN.

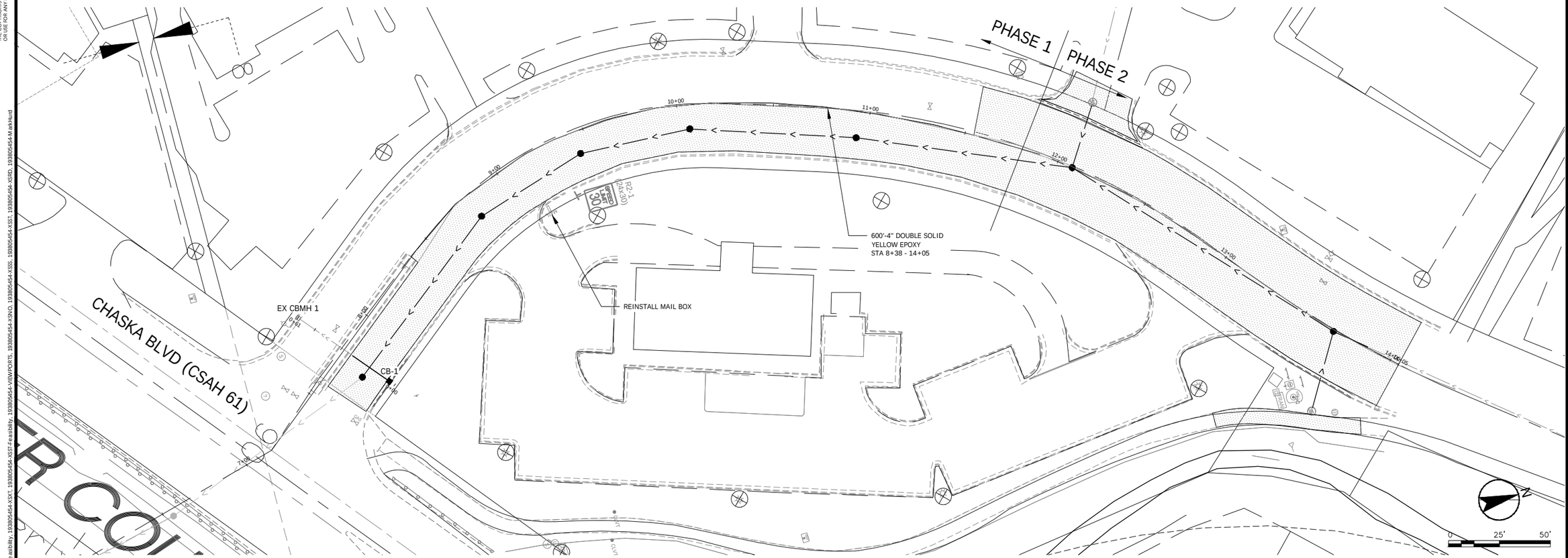

YELLOW BRICK RD

Stantec
733 Marquette Avenue, Suite 1000
Minneapolis, MN 55402
www.stantec.com

I HEREBY CERTIFY THAT THIS PLAN, SPECIFICATION, OR REPORT WAS PREPARED BY ME OR UNDER MY DIRECT SUPERVISION AND THAT I AM A DULY LICENSED PROFESSIONAL ENGINEER UNDER THE LAWS OF THE STATE OF MINNESOTA.

PRINT NAME: ERIC. S. LEMBKE

SIGNATURE:

DATE:

LIC. NO. 42748

BID SET

CITY OF CHASKA, MINNESOTA

YELLOW BRICK ROAD UTILITIES IMPROVEMENTS

SIGNING AND STRIPING PLAN

YELLOW BRICK ROAD

NO	REVISION	DATE

SURVEY	PR/PW/EB
DRAWN	BF
DESIGNED	ESL
CHECKED	ND
APPROVED	ESL
PROJ. NO.	193805454

SHEET NUMBER

T9.01B

Date: 3/30/2022 - 2:12 pm
Cad File: ...\193805454-XSNO-Feasibility, 193805454-XSS-Feasibility, 193805454-XSST-Feasibility, 193805454-XSVT-Feasibility, 193805454-VIEWPORTS, 193805454-XSNO, 193805454-XSSO, 193805454-XSST, 193805454-XSVT, 193805454-XSPL,

THE CONTRACTOR SHALL VERIFY AND BE RESPONSIBLE FOR ALL DIMENSIONS. DO NOT SCALE THE DRAWING - ANY ERRORS OR OMISSIONS SHALL BE REPORTED TO STANTEC WITHOUT DELAY. THE COPYRIGHTS TO ALL DESIGNS AND DRAWINGS ARE THE PROPERTY OF STANTEC. REPRODUCTION OR USE FOR ANY PURPOSE OTHER THAN THAT AUTHORIZED BY STANTEC IS FORBIDDEN.

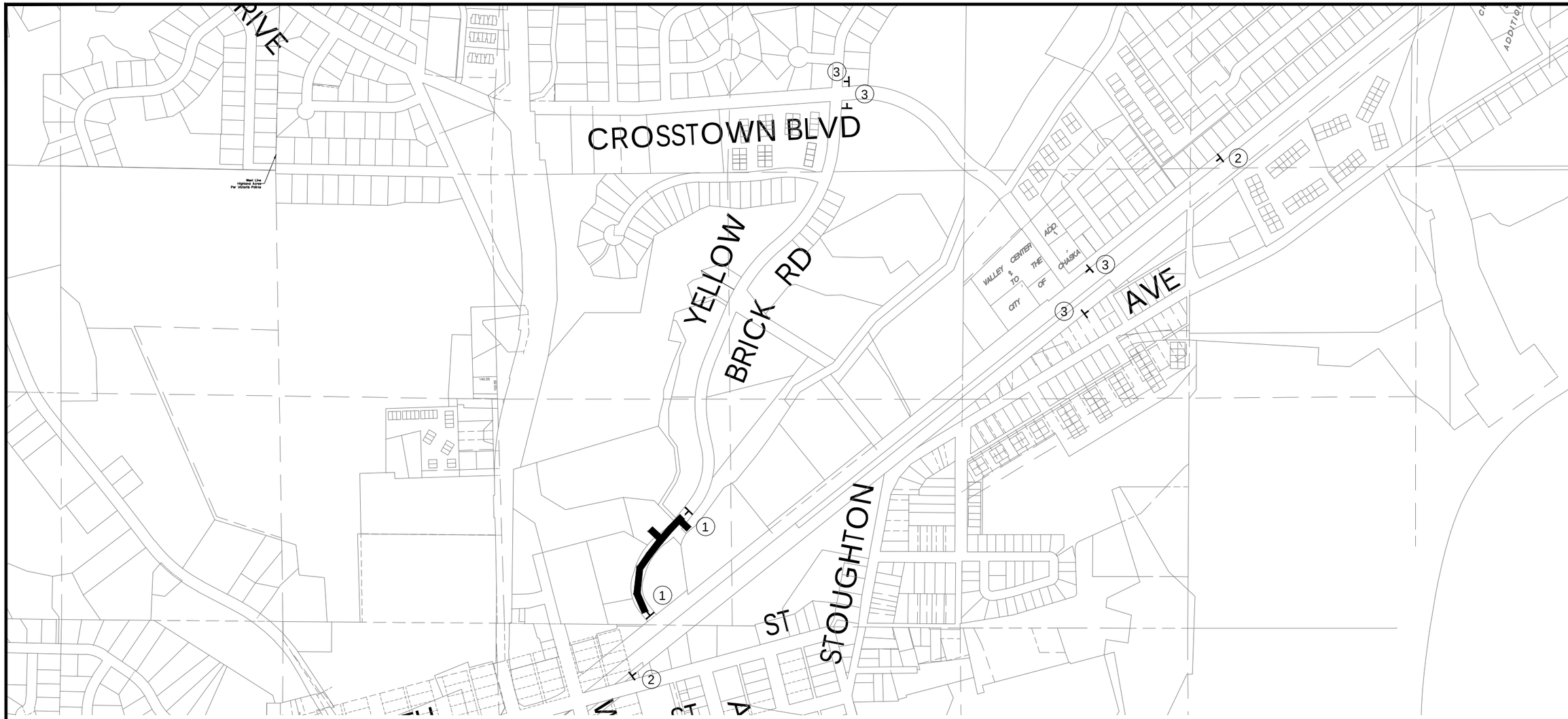

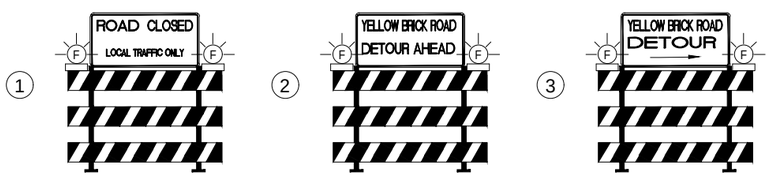

NOTES:

PLAN INTENDED TO BE IN PLACE AS PERMANENT ADVANCED WARNING. ALL PROJECT PHASING AND ADJUSTMENTS TO THE TRAFFIC CONTROL PLAN IS THE RESPONSIBILITY OF THE CONTRACTOR.

EXISTING ACCESS TO RESIDENCES (DRIVEWAYS) SHALL BE MAINTAINED THROUGHOUT PROJECT DURATION.

ALL COSTS INCURRED FOR MATERIALS, INSTALLATION, AND MAINTENANCE OF TRAFFIC CONTROL DEVICES AS SHOWN ON THIS SHEET AND RELATED WORK DURING CONSTRUCTION SHALL BE INCLUDED IN PRICE BID FOR ITEM "TRAFFIC CONTROL".

ALL TRAFFIC CONTROL DEVICES AND SIGNING SHALL CONFORM AND BE INSTALLED IN ACCORDANCE WITH THE "MINNESOTA MANUAL ON UNIFORM TRAFFIC CONTROL DEVICES" (MN MUTCD) AND PART VI, "FIELD MANUAL" FOR TEMPORARY TRAFFIC CONTROL DEVICES.

BARRICADE PLACEMENT TO BE DETERMINED IN THE FIELD SO AS NOT TO OBSTRUCT VISION TO OR FROM ROADWAY ENTRANCES.

THE CONTRACTOR SHALL REMOVE, SALVAGE OR COVER & RESTORE AS APPROPRIATE, ALL EXISTING SIGNING THAT CONFLICTS WITH THIS TRAFFIC CONTROL PLAN TO THE SATISFACTION OF THE ENGINEER. EXISTING TRAFFIC CONTROL DEVICES INSTALLED BY THE TOWNSHIP AFTER FLOOD DAMAGE OCCURRED SHALL BE MOVED ASIDE BY CONTRACTOR (INCIDENTAL) AND REMOVED FROM THE SITE BY THE TOWNSHIP.

EXACT LOCATION OF TRAFFIC CONTROL DEVICES TO BE DETERMINED BY THE ENGINEER IN THE FIELD.

ALL INSTALLATIONS REQUIRING POSTS SHALL HAVE "U" CHANNEL TYPE. MINIMUM WEIGHT PER FOOT - 2.5 LBS.

ALL TRAFFIC CONTROL DEVICES SHALL HAVE RETROREFLECTIVE SHEETING.

THE USE OF TEMPORARY ORANGE CONSTRUCTION FENCING MAY BE REQUIRED BY THE ENGINEER TO COMPLETELY CLOSE OFF ANY SPECIFIC WORK AREA.

N

0 300' 600'
Scale in feet

Stantec
733 Marquette Avenue, Suite 1000
Minneapolis, MN 55402
www.stantec.com

I HEREBY CERTIFY THAT THIS PLAN, SPECIFICATION, OR REPORT WAS PREPARED BY ME OR UNDER MY DIRECT SUPERVISION AND THAT I AM A DULY LICENSED PROFESSIONAL ENGINEER UNDER THE LAWS OF THE STATE OF MINNESOTA.

PRINT NAME: ERIC. S. LEMBKE

SIGNATURE: _____

DATE: _____ LIC. NO. 42748

BID SET

CITY OF CHASKA, MINNESOTA

YELLOW BRICK ROAD UTILITIES IMPROVEMENTS

TRAFFIC CONTROL PLAN

YELLOW BRICK ROAD

NO	REVISION	DATE

SURVEY	PR/PW/EB
DRAWN	BF
DESIGNED	ESL
CHECKED	ND
APPROVED	ESL
PROJ. NO.	193805454

SHEET NUMBER

T9.02B

Date: 2/23/2022 - 2:17pm
Xref(s): 193805xxxx-CS-xxxx-TB, Xref(s): 01xf.dwg, 09f0920.1193805xxxx-T902.dwg
Xref Image(s): Chaska-5-15-18, 193805xxxx-BORDER

THE CONTRACTOR SHALL VERIFY AND BE RESPONSIBLE FOR ALL DIMENSIONS. DO NOT SCALE THE DRAWING - ANY ERRORS OR OMISSIONS SHALL BE REPORTED TO STANTEC WITHOUT DELAY. ALL REPORTS, PLANS, & SPECIFICATIONS ARE THE PROPERTY OF STANTEC. REPRODUCTION OF THE COPYRIGHTS TO ALL DESIGNS AND DRAWINGS ARE THE PROPERTY OF STANTEC. REPRODUCTION OR USE FOR ANY PURPOSE OTHER THAN THAT AUTHORIZED BY STANTEC IS FORBIDDEN.

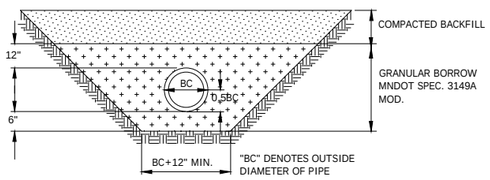

PIPE FOUNDATION & BEDDING IN GOOD SOILS

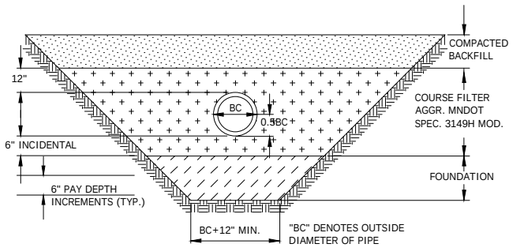

IMPROVED PIPE FOUNDATION & BEDDING IN POOR SOILS

Stantec
2335 Highway 36 W
St. Paul, MN 55113
www.stantec.com

BEDDING METHODS FOR PVC

CHASKA, MINNESOTA

LAST REVISION: MARCH 2008

PLATE NO. GEN–7

PRECAST INVERT WITH A MINIMUM 1% THROUGH SLOPE REQUIRED.

PRECAST INVERT MUST BE 1/2 DIAMETER OF THE PIPE AND BENCHES SLOPED 2" TOWARD THE INVERT.

FRAME	A	B
R1642-2310B	27"	7"
R1755G	27"	7"

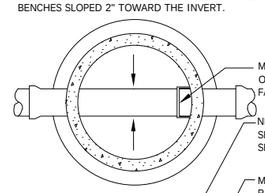

PLAN

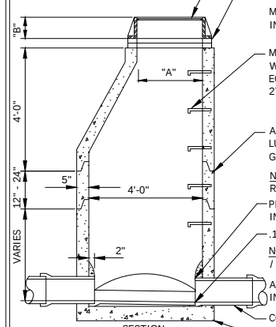

SECTION

MANHOLE STEPS SHALL BE PLACED SO THAT OFFSET VERTICAL PORTION OF CONE IS FACING DOWNSTREAM.

NEENAH COVER **R-1642-5001**, LETTERED "SANITARY SEWER" WITH 2 CONCEALED PICK HOLES AND SELF SEALING LID. SEE SPECIFICATION FOR CASTING NUMBER.

MINIMUM OF 2 MAXIMUM OF 4 ADJUSTMENT RINGS. RINGS SHALL BE CONCRETE MORTAR WITH INFRASHIELD.

MAXIMUM 20"ADJUSTMENT ALLOWED INCLUDING RINGS AND CASTING.

MANHOLE STEPS, COPOLYMER POLYPROPYLENE PLASTIC, WITH 1/2" GRADE 60 STEEL REINFORCEMENT OR EQUAL, 16" ON CENTER. (NO STEPS ALLOWED IN UPPER 27" BARREL)

ALL JOINTS IN MANHOLE TO HAVE SELF LUBRICATING RUBBER GASKETS, RAMNECK, AND GATOR WRAP.

NOTE: ALL INFILTRATION AREAS SHALL BE REPAIRED UNTIL MANHOLE IS WATER TIGHT.

PIPE SHALL BE CUT 2" FROM INSIDE FACE OF WALL.

.1' DROP ACROSS INVERTS MIN.

NOTE: KOR-N-SEAL MANHOLE TO BE USED FOR PIPE / MANHOLE CONNECTION.

ALL DOG HOUSES SHALL BE GROUTED ON INSIDE OF MANHOLE.

COMPACT TO TOP OF PIPE, TO FIRST JOINT.

MINIMUM THICKNESS OF PRECAST BASE IS 6" FOR 14' DEEP OR LESS, AND INCREASES 1" IN THICKNESS FOR EVERY 4' OF DEPTH GREATER THAN 14'.

OUTER SURFACE OF ALL PRE-CAST SECTIONS SHALL RECEIVE 2 COATS OF BITUMINOUS DAMP PROOFING (SEE ENGINEERING GUIDELINES OR PROJECT SPECIFICATIONS FOR MORE DETAILS) .

Stantec
2335 Highway 36 W
St. Paul, MN 55113
www.stantec.com

SANITARY SEWER MANHOLE

CHASKA, MINNESOTA

LAST REVISION: MARCH 2018

PLATE NO. SAN–1

PRECAST INVERT WITH A MINIMUM 1% THROUGH SLOPE REQUIRED.

PRECAST INVERT MUST BE 1/2 DIAMETER OF THE PIPE AND BENCHES SLOPED 2" TOWARD THE INVERT.

FRAME	A	B
R16420245	27"	7"
R1755G	27"	7"

OUTER SURFACE OF ALL PRE-CAST SECTIONS SHALL RECEIVE 2 COATS OF BITUMINOUS DAMP PROOFING (SEE ENGINEERING GUIDELINES OR PROJECT SPECIFICATIONS FOR MORE DETAILS) .

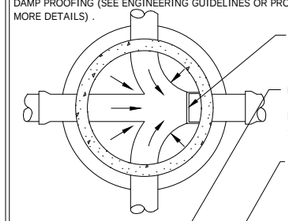

PLAN

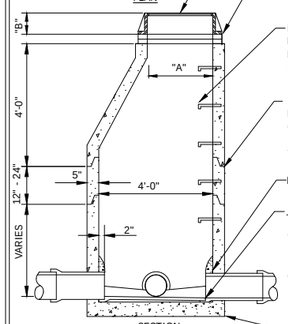

SECTION

MANHOLE STEPS SHALL BE PLACED SO THAT OFFSET VERTICAL PORTION OF CONE IS FACING DOWNSTREAM.

NEENAH COVER **R1642-5001**, LETTERED "SANITARY SEWER" WITH 2 CONCEALED PICK HOLES AND SELF SEALING LID. SEE SPECIFICATIONS FOR CASTING NUMBER

MINIMUM OF 2 MAXIMUM OF 4 ADJUSTMENT RINGS. RINGS SHALL BE CONCRETE MORTAR WITH INFRASHIELD.

MAXIMUM 20" ADJUSTMENT ALLOWED INCLUDING RINGS AND CASTING

MANHOLE STEPS, COPOLYMER POLYPROPYLENE PLASTIC, WITH 1/2" GRADE 60 STEEL REINFORCEMENT OR EQUAL, 16" ON CENTER. (NO STEPS ALLOWED IN UPPER 27" BARREL)

ALL JOINTS IN MANHOLE TO HAVE SELF LUBRICATING RUBBER GASKETS, RAMNECK, AND GATOR WRAP.

NOTE: ALL INFILTRATION AREAS SHALL BE REPAIRED UNTIL MANHOLE IS WATER TIGHT.

PIPE SHALL BE CUT OUT 2" FROM INSIDE FACE OF WALL.

.1' DROP ACROSS INVERTS (MIN.)

NOTE: KOR-N-SEAL MANHOLE TO BE USED FOR PIPE / MANHOLE CONNECTION.

ALL DOG HOUSES SHALL BE GROUTED ON INSIDE OF MANHOLE.

MINIMUM THICKNESS OF PRECAST BASE IS 6" FOR 14' DEEP OR LESS, AND INCREASES 1" IN THICKNESS FOR EVERY 4' OF DEPTH GREATER THAN 14'.

Stantec
2335 Highway 36 W
St. Paul, MN 55113
www.stantec.com

SANITARY SEWER JUNCTION MANHOLE

CHASKA, MINNESOTA

LAST REVISION: MARCH 2018

PLATE NO. SAN–2

PRECAST INVERT WITH A MINIMUM 1% THROUGH SLOPE REQUIRED.

PRECAST INVERT MUST BE 1/2 DIAMETER OF THE PIPE AND BENCHES SLOPED 2" TOWARD THE INVERT.

FRAME	A	B
R1642-2310B	27"	7"
R1755G	27"	7"

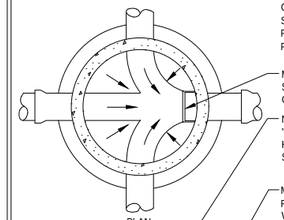

PLAN

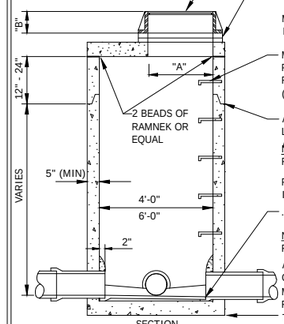

SECTION

OUTER SURFACE OF ALL PRE-CAST SECTIONS SHALL RECEIVE 2 COATS OF BITUMINOUS DAMP PROOFING (SEE ENGINEERING GUIDELINES OR PROJECT SPECIFICATIONS FOR MORE DETAILS) .

MANHOLE STEPS SHALL BE PLACED SO THAT OFFSET VERTICAL PORTION OF CONE IS FACING DOWNSTREAM.

NEENAH COVER **R1642-5001**, LETTERED "SANITARY SEWER", WITH 2 CONCEALED PICK HOLES AND SELF SEALING LID. SEE SPECIFICATION FOR CASTING NUMBER.

MINIMUM OF 2 MAXIMUM OF 4 ADJUSTMENT RINGS. RINGS SHALL BE CONCRETE MORTAR WITH INFRASHIELD.

MAXIMUM 20" ADJUSTMENT ALLOWED INCLUDING RINGS AND CASTING.

MANHOLE STEPS, COPOLYMER POLYPROPYLENE PLASTIC, WITH 1/2" GRADE 60 STEEL REINFORCEMENT OR EQUAL,16" ON CENTER. (NO STEPS ALLOWED IN TOP SLAB.)

ALL JOINTS IN MANHOLE TO HAVE SELF LUBRICATING RUBBER GASKETS, RAMNECK, AND GATOR WRAP.

NOTE: ALL INFILTRATION AREAS SHALL BE REPAIRED UNTIL MANHOLE IS WATER TIGHT.

PIPE SHALL BE CUT OUT 2" FROM INSIDE FACE OF WALL.

.1' DROP ACROSS INVERTS (MIN.)

NOTE: KOR-N-SEAL MANHOLE TO BE USED FOR PIPE / MANHOLE CONNECTION.

ALL DOG HOUSES SHALL BE GROUTED ON INSIDE OF MANHOLE.

MINIMUM THICKNESS OF PRECAST BASE IS 6" FOR 14' DEEP OR LESS, AND INCREASES 1" IN THICKNESS FOR EVERY 4' OF DEPTH GREATER THAN 14'.

Stantec
2335 Highway 36 W
St. Paul, MN 55113
www.stantec.com

SANITARY SEWER JUNCTION MANHOLE WITH REINFORCED TOP SLAB

CHASKA, MINNESOTA

LAST REVISION: MARCH 2018

PLATE NO. SAN–3

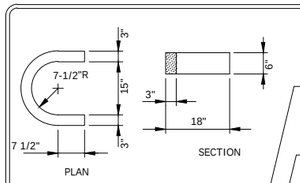

HORSESHOE DETAILS

FRAME	A	B
R1642-2310B	27"	7"
R1755G	27"	7"

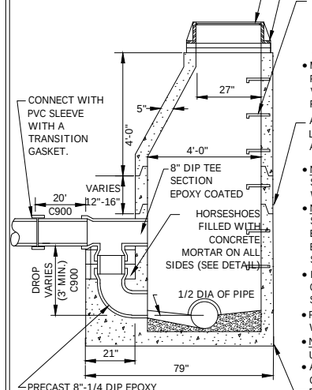

SECTION

NEENAH COVER **R-1642-5001**, LETTERED "SANITARY SEWER", WITH 2 CONCEALED PICK HOLES AND SELF SEALING LID. SEE SPECS. FOR CASTING NUMBERS.

MINIMUM OF 2 MAXIMUM OF 4 ADJUSTMENT RINGS. RINGS SHALL BE CONCRETE MORTAR WITH INFRASHIELD.

- MAXIMUM 20" ADJUSTMENT ALLOWED INCLUDING RINGS AND CASTING.

MANHOLE STEPS, COPOLYMER POLYPROPYLENE PLASTIC, WITH 1/2" GRADE 60 STEEL REINFORCEMENT OR EQUAL 16" ON CENTER. (NO STEPS ALLOWED IN UPPER 27" BARREL.)

- MANHOLE STEPS SHALL BE PLACED SO THAT OFFSET VERTICAL PORTION OF CONE IS FACING DOWNSTREAM.

ALL JOINTS IN MANHOLE TO HAVE SELF LUBRICATING RUBBER GASKETS, RAMNECK, AND GATOR WRAP.

- NOTE: ALL INFILTRATION AREAS SHALL BE REPAIRED UNTIL MANHOLE IS WATER TIGHT.
- NOTE: OUTER SURFACE OF ALL PRE-CAST SECTIONS SHALL RECEIVE 2 COATS OF BITUMINOUS DAMP PROOFING (SEE ENGINEERING GUIDELINES OR PROJECT SPECIFICATIONS FOR MORE DETAILS).
- INTERIOR MANHOLE WALL SHALL BE COMPLETELY LINED WITH HDPE, SEE SPEC FOR MORE DETAILS.
- PIPE SHALL BE CUT OUT FLUSH WITH INSIDE FACE OF WALL.
- NOTE: KOR-N-SEAL MANHOLE TO BE USED FOR PIPE / MANHOLE CONNECTION.
- ALL DOG HOUSES SHALL BE GROUTED ON INSIDE OF MANHOLE. PRECAST INVERT SHOULD BE 1/2 DIAMETER OF PIPE AND BENCHES SLOPED 2" TOWARD INVERT.

Stantec
2335 Highway 36 W
St. Paul, MN 55113
www.stantec.com

SANITARY SEWER DROP INLET MANHOLE

CHASKA, MINNESOTA

LAST REVISION: MARCH 2018

PLATE NO. SAN–4

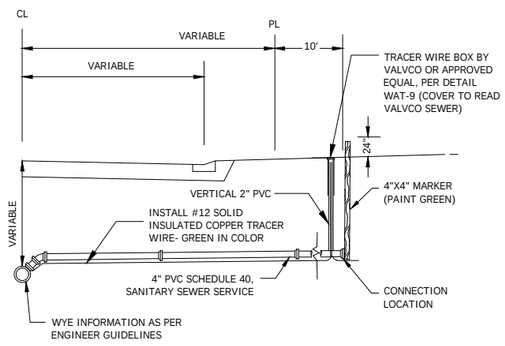

NOTES:

1. SEWER SERVICES, 4" SCHEDULE 40 PVC SEWER PIPE
2. SLOPE - 1/4" PER FOOT MINIMUM.
3. PIPE JOINTS SHALL BE NON GASKETED, SOLVENT WELD TYPE.
4. ALL PIPE SHALL BE BEDDED IN GRANULAR BORROW 3149.2B1 EXCEPT THE LAST TEN FEET WHERE COARSE FILTER AGGREGATE (3149.2H) AGGREGATE WILL BE REQUIRED.
5. BENDS OF 45 OR LESS SHALL BE USED WITHIN THE LAST 5' OF THE SERVICE IF THE DEPTH OF THE SERVICE WOULD EXCEED 10'.
6. NO SERVICE RISERS LESS THAN 3 FEET SHALL BE PERMITTED.
7. A SEPARATE TRACER WIRE WILL EXTEND FROM THE FINISH GRADE AT TRACER WIRE BOX AND FOLLOW SEWER SERVICE TO STRUCTURE FOUNDATION. TRACER WIRE FROM BOX TO FOUNDATION BY OTHERS.
8. FOR DEPTHS GREATER THAN 22', SERVICE PIPE SHALL BE C900 FROM MAIN TO CONNECTION, WITH TRANSITION FITTING FROM C900 TO SCH 40 INSTALLED AT CONNECTION LOCATION.

Stantec
2335 Highway 36 W
St. Paul, MN 55113
www.stantec.com

SEWER SERVICE CONNECTION

CHASKA, MINNESOTA

LAST REVISION: APRIL 2016

PLATE NO. SER–1

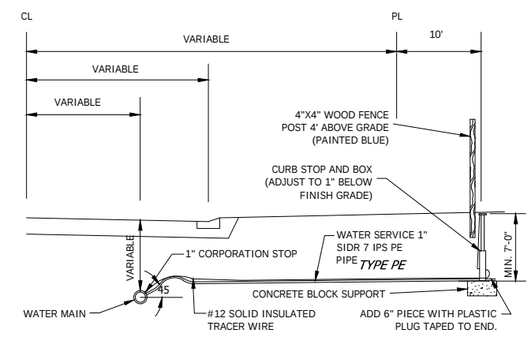

PVC WATER MAIN
STAINLESS STEEL SERVICE SADDLE
SMITH-BLAIR 372 OR APPROVED EQUAL

NOTE: FOR SERVICES LARGER THAN 1" A TAPPING SLEEVE IS REQUIRED. ROCKWELL TYPE 230, FULL CIRCLE, WITH TAP THREADED FOR APPROPRIATE SIZE COPPER CORPORATION STOP. (OR EQUAL)

CORPORATION STOP	CURB STOP	CURB BOX
MUELLER B25009N	MUELLER B25222N	MUELLER H-10300-N OR H-10302-N
FORD FB1001-4Q	FORD B66444MQ	FORD EM2-75-56R-NL OR EM2-75-57R-NL
A.Y. MCDONALD 74704B	A.Y. MCDONALD 76104	A.Y. MCDONALD 75615 OR 75614

*TRANSITION COUPLER USED ON EXISTING SERVICES. SEE PLAN SHEETS FOR TYPE PER ADDRESS.

NOTES:

1. CURB BOX SHALL HAVE A STATIONARY ROD.
2. CURB BOX SHALL EXTEND FROM 78" TO 90".
3. ALL PIPE SHALL BE BEDDED IN GRANULAR BORROW 3149.2B1 EXCEPT THE LAST TEN FEET WHERE COARSE FILTER AGGREGATE (3149.2H) WILL BE REQUIRED.
4. IF CURB STOP IS IN DRIVEWAY, CONTRACTOR MUST INSTALL A FORD A-1 CASTING, MARKED WITH "WATER" ON LID.
5. CURB BOX LID SHALL BE MUELLER #89375 "TW" OR EQUAL.
6. ALL BRASS FITTINGS SHALL BE "NO LEAD BRASS".
7. PIPE INSERT STIFFENERS REQUIRED FOR FITTING CONNECTIONS.
8. HDPE SERVICE PIPE SHALL BE MANUFACTURED BY ENDOPURE OR BLUE ULTRA PIPE.

Stantec
2335 Highway 36 W
St. Paul, MN 55113
www.stantec.com

WATER SERVICE CONNECTION HDPE PIPE

CHASKA, MINNESOTA

LAST REVISION: MARCH 2016

PLATE NO. SER–2A

PVC PIPE
BED AND ENCASE IN SELECT GRANULAR, TYPICAL PVC APPLICATION.

SERVICE RISERS FOR SEWER MAINS LESS THAN 22' SHALL BE SCHEDULE 40 PVC (SOLVENT WELD JOINTS).
FOR DEPTHS GREATER THAN 22', SERVICE PIPE SHALL BE C900 FROM MAIN TO CONNECTION WITH TRANSITION FITTING FROM C900 TO SCH 40 INSTALLED AT CONNECTION LOCATION.

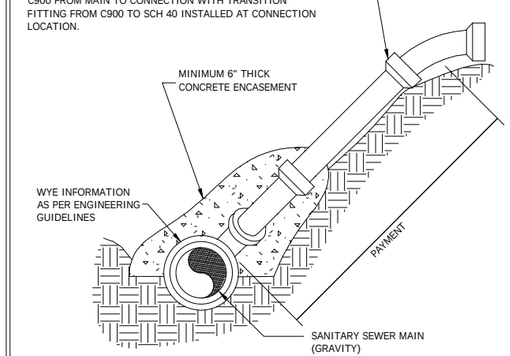

Stantec
2335 Highway 36 W
St. Paul, MN 55113
www.stantec.com

SERVICE RISER

CHASKA, MINNESOTA

LAST REVISION: MARCH 2016

PLATE NO. SER–3

Stantec
733 Marquette Avenue, Suite 1000
Minneapolis, MN 55402
www.stantec.com

I HEREBY CERTIFY THAT THIS PLAN, SPECIFICATION, OR REPORT WAS PREPARED BY ME OR UNDER MY DIRECT SUPERVISION AND THAT I AM A DULY LICENSED PROFESSIONAL ENGINEER UNDER THE LAWS OF THE STATE OF MINNESOTA.

PRINT NAME: ERIC S. LEMBKE

SIGNATURE: _____ LIC. NO. 42748

DATE: _____

BID SET

CITY OF CHASKA, MINNESOTA

YELLOW BRICK ROAD UTILITIES IMPROVEMENTS

SANITARY SEWER
STANDARD DETAILS

NO	REVISION	DATE

SURVEY	PR/PW/EB
DRAWN	BF
DESIGNED	ESL
CHECKED	ND
APPROVED	ESL
PROJ. NO.	193805454

SHEET NUMBER
C8.01B

THE CONTRACTOR SHALL VERIFY AND BE RESPONSIBLE FOR ALL DIMENSIONS. DO NOT SCALE THE DRAWING. ALL DESIGNS, DRAWINGS AND SPECIFICATIONS ARE THE PROPERTY OF STANTEC. REPRODUCTION OR USE FOR ANY PURPOSE OTHER THAN THAT AUTHORIZED BY STANTEC IS FORBIDDEN.

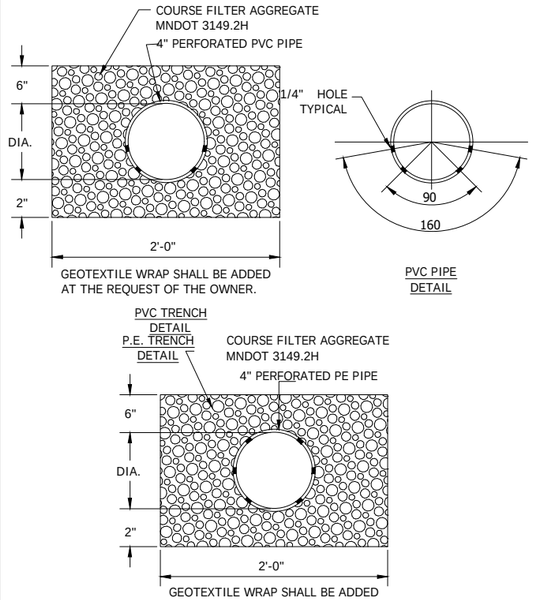

Stantec
2335 Highway 36 W
St. Paul, MN 55113
www.stantec.com

PERFORATED PIPE TRENCH DETAIL

CHASKA, MINNESOTA

LAST REVISION: NOV. 2014

PLATE NO. STO–13

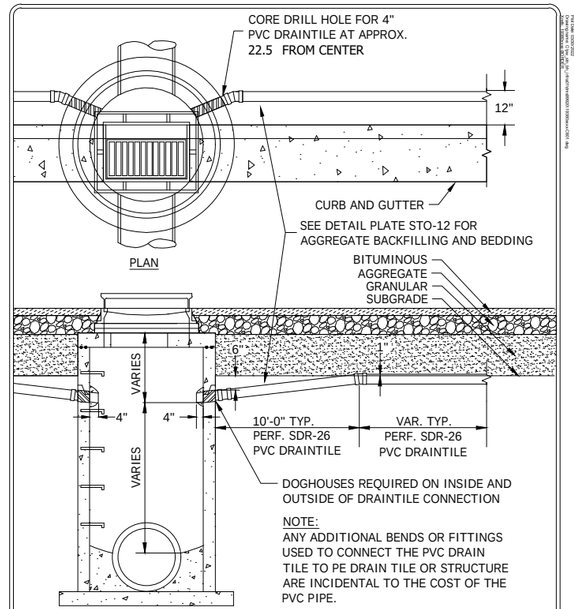

Stantec
2335 Highway 36 W
St. Paul, MN 55113
www.stantec.com

DRAINTILE INSTALLATION INTO CATCHBASIN MANHOLE

CHASKA, MINNESOTA

LAST REVISION: APRIL 2016

PLATE NO. STO–14

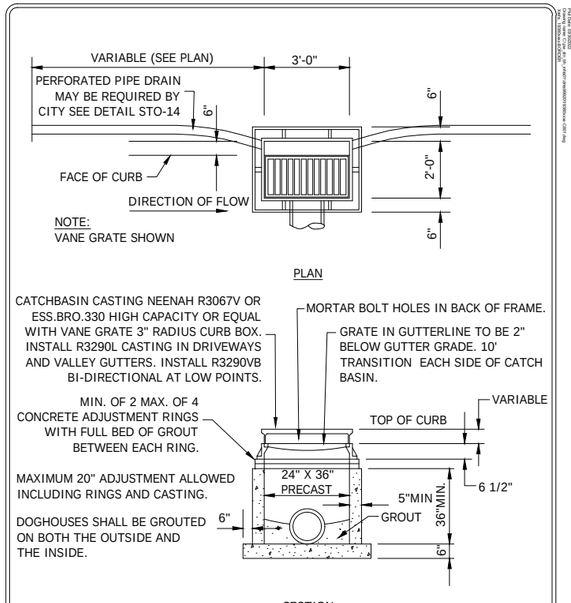

Stantec
2335 Highway 36 W
St. Paul, MN 55113
www.stantec.com

TYPE II CATCHBASIN

CHASKA, MINNESOTA

LAST REVISION: MARCH 2018

PLATE NO. STO–6

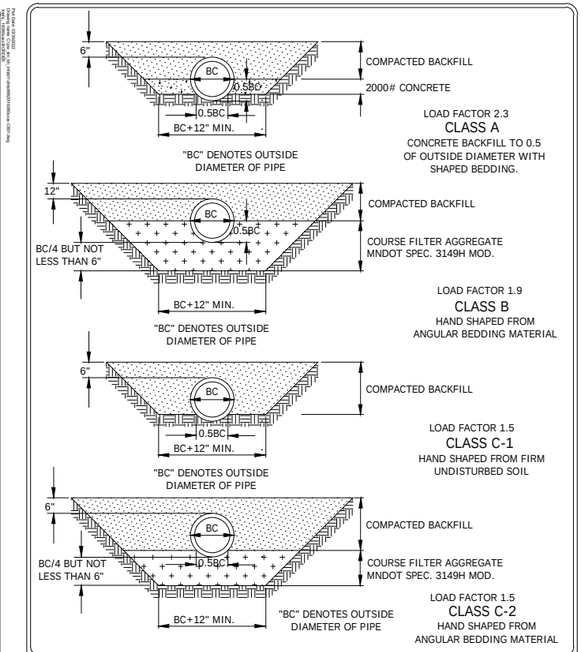

Stantec
2335 Highway 36 W
St. Paul, MN 55113
www.stantec.com

BEDDING METHODS FOR RCP OR DIP

CHASKA, MINNESOTA

LAST REVISION: MARCH 2001

PLATE NO. GEN–6

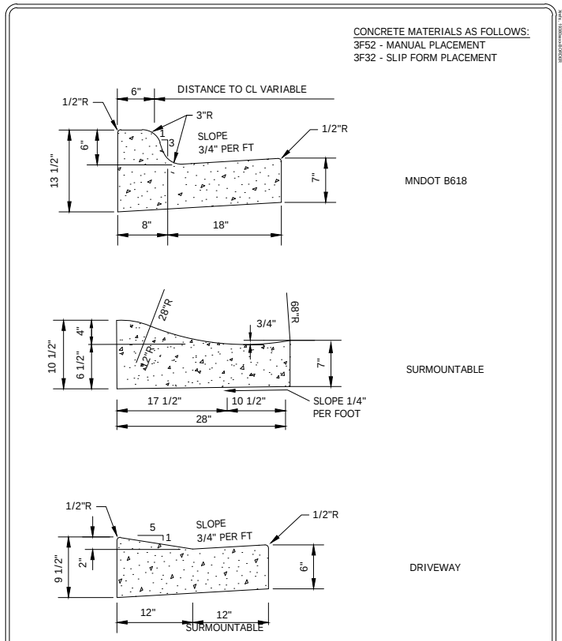

Stantec
2335 Highway 36 W
St. Paul, MN 55113
www.stantec.com

CURB AND GUTTER

CHASKA, MINNESOTA

LAST REVISION: APRIL 2016

PLATE NO. STR–1

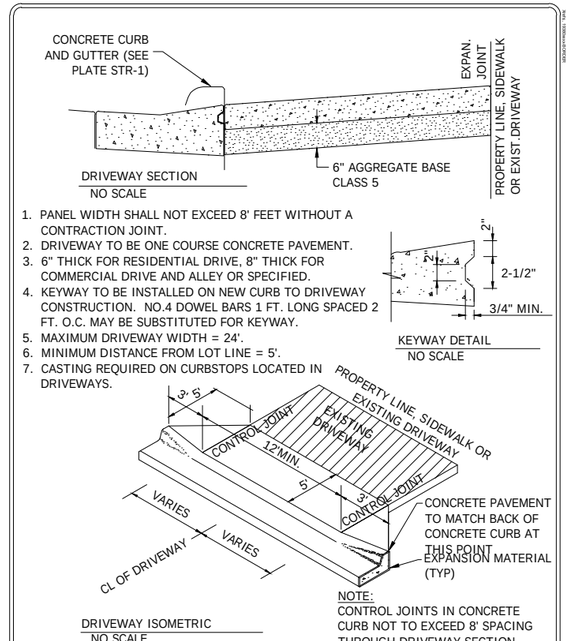

Stantec
2335 Highway 36 W
St. Paul, MN 55113
www.stantec.com

CONCRETE DRIVEWAY APRON

CHASKA, MINNESOTA

LAST REVISION: APRIL 2016

PLATE NO. STR–2

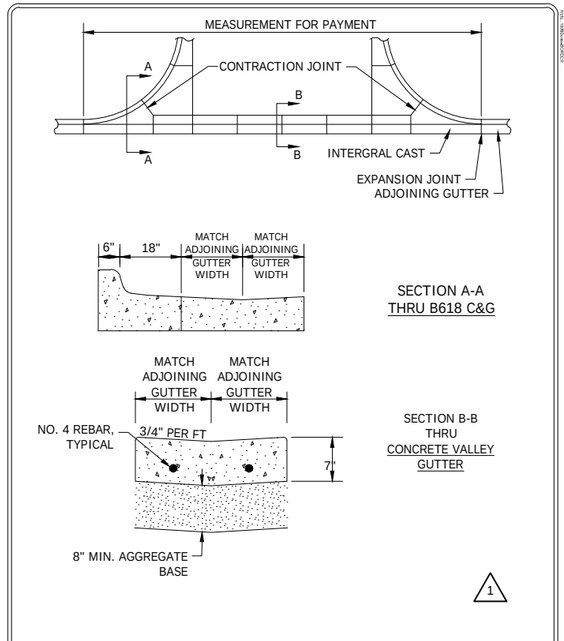

Stantec
2335 Highway 36 W
St. Paul, MN 55113
www.stantec.com

COMMERCIAL DRIVEWAY

CHASKA, MINNESOTA

LAST REVISION: APRIL 2016

PLATE NO. STR–3

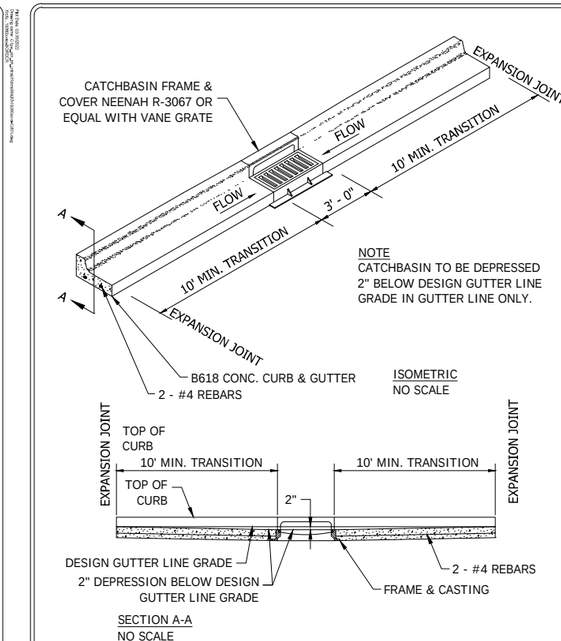

Stantec
2335 Highway 36 W
St. Paul, MN 55113
www.stantec.com

B618 CURB & GUTTER CONSTRUCTION AT CATCHBASIN

CHASKA, MINNESOTA

LAST REVISION: MARCH 2008

PLATE NO. STR–4

Stantec
733 Marquette Avenue, Suite 1000
Minneapolis, MN 55402
www.stantec.com

I HEREBY CERTIFY THAT THIS PLAN, SPECIFICATION, OR REPORT WAS PREPARED BY ME OR UNDER MY DIRECT SUPERVISION AND THAT I AM A DULY LICENSED PROFESSIONAL ENGINEER UNDER THE LAWS OF THE STATE OF MINNESOTA.

PRINT NAME: ERIC S. LEMBKE

SIGNATURE:

DATE:

LIC. NO. 42748

BID SET

CITY OF CHASKA, MINNESOTA

YELLOW BRICK ROAD UTILITIES IMPROVEMENTS

ROADWAY

STANDARD DETAILS

NO	REVISION	DATE

SURVEY	PR/PW/EB
DRAWN	BF
DESIGNED	ESL
CHECKED	ND
APPROVED	ESL
PROJ. NO.	193805454

SHEET NUMBER

C8.02B

THE CONTRACTOR SHALL VERIFY AND BE RESPONSIBLE FOR ALL DIMENSIONS. DO NOT SCALE THE DRAWING - ANY ERRORS OR OMISSIONS SHALL BE REPORTED TO STANTEC WITHOUT DELAY. THE COPYRIGHTS TO ALL DESIGNS AND DRAWINGS ARE THE PROPERTY OF STANTEC. REPRODUCTION OR USE FOR ANY PURPOSE OTHER THAN THAT AUTHORIZED BY STANTEC IS FORBIDDEN.

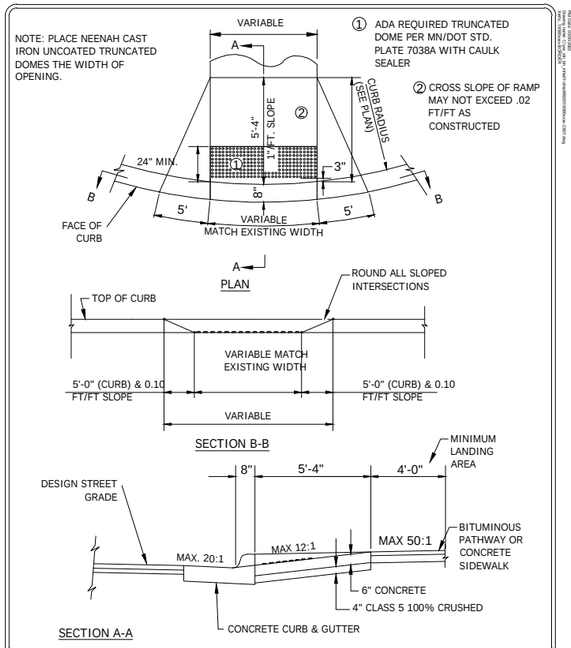

Stantec
2335 Highway 36 W
St. Paul, MN 55113
www.stantec.com

PEDESTRIAN CURB RAMP FOR PATHWAY/SIDEWALK

CHASKA, MINNESOTA

LAST REVISION: APRIL 2011

PLATE NO. STR–11

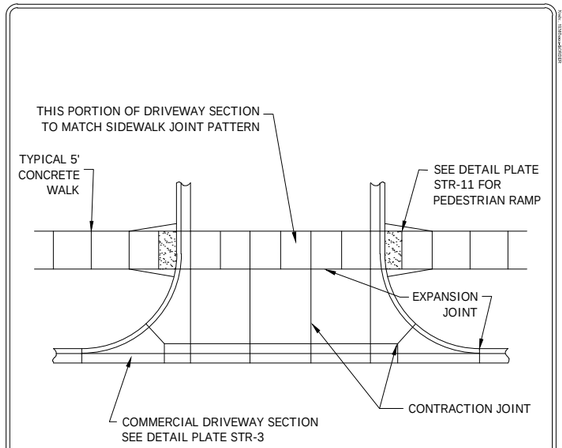

SEE DRIVEWAY DETAIL PLATE STR-2 FOR CONCRETE THICKNESS AND PANEL WIDTH

ADDITIONAL JOINTS MAY BE ADDED AT CONTRACTORS DISCRETION AND OWNERS APPROVAL

Stantec
2335 Highway 36 W
St. Paul, MN 55113
www.stantec.com

TYPICAL SECTION FOR SIDEWALK ACROSS COMMERCIAL DRIVEWAY

CHASKA, MINNESOTA

LAST REVISION: APRIL 2016

PLATE NO. STR–12

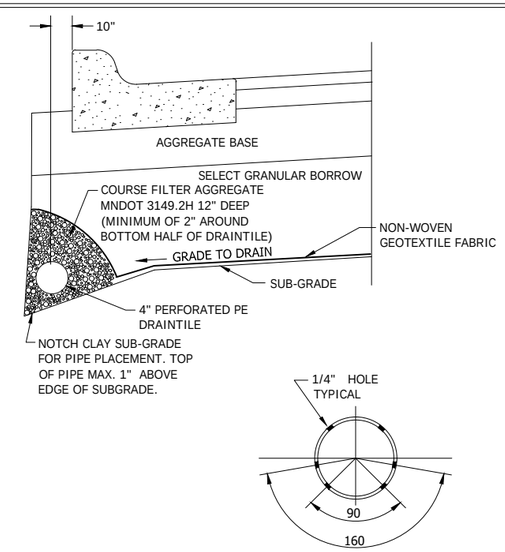

NOTE: PE PIPE DETAIL
PE PIPE IS ACCEPTABLE ONLY WITH PRIOR ENGINEER APPROVAL OR SPECIFACTION.

Stantec
2335 Highway 36 W
St. Paul, MN 55113
www.stantec.com

PERFORATED PE DRAINTILE PIPE BELOW CONCRETE CURB

CHASKA, MINNESOTA

LAST REVISION: NOV. 2014

PLATE NO. STO–12a

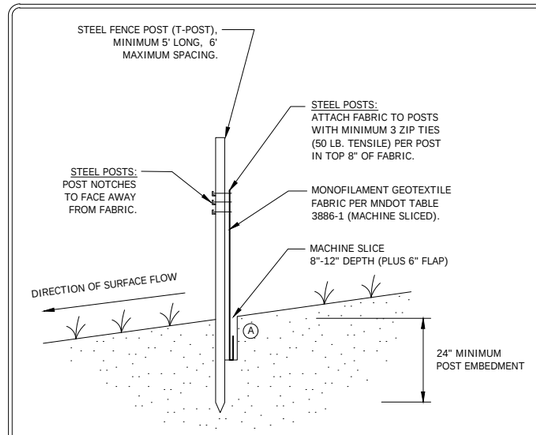

NOTE:
THE MACHINE SLICED METHOD (THIS DETAIL) IS THE STANDARD SILT FENCE INSTALLATION METHOD. HEAVY DUTY (ERO-1B) SILT FENCE INSTALLATION METHODS SHOULD ONLY BE USED WHEN APPROVED OR DIRECTED BY THE CITY.

(A) COMPACTION:
AFTER "SLICING" IN THE FABRIC AND ***BEFORE*** INSTALLATION OF STEEL POSTS, DRIVE INSTALLATION EQUIPMENT OVER THE "SLICE" WHILE FABRIC IS LAYING ON THE GROUND. ***THEN*** INSTALL THE POSTS AND PULL UP FABRIC TO ATTACH AT A UNIFORM HEIGHT.

Stantec
2335 Highway 36 W
St. Paul, MN 55113
www.stantec.com

SILT FENCE MACHINE SLICED

CHASKA, MN

LAST REVISION: APRIL 2011

PLATE NO. ERO–1A

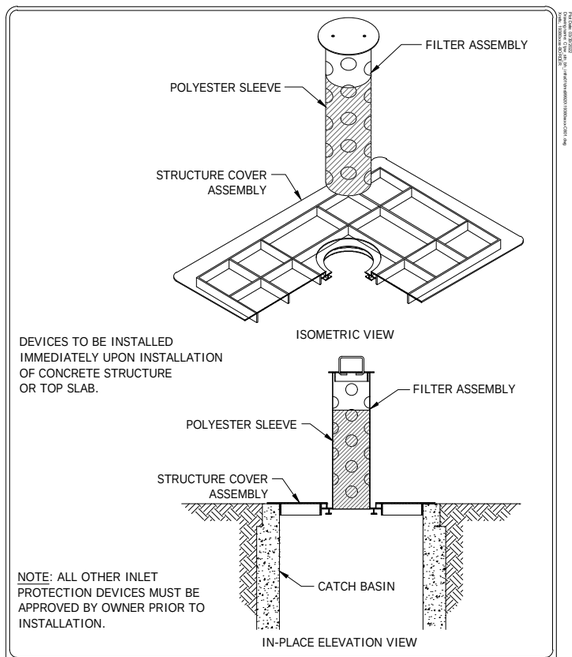

NOTE: ALL OTHER INLET PROTECTION DEVICES MUST BE APPROVED BY OWNER PRIOR TO INSTALLATION.

Stantec
2335 Highway 36 W
St. Paul, MN 55113
www.stantec.com

INLET PROTECTION FOR CATCH BASIN BEFORE CURB CONSTRUCTION

CHASKA, MINNESOTA

LAST REVISION: APRIL 2008

PLATE NO. ERO–4A

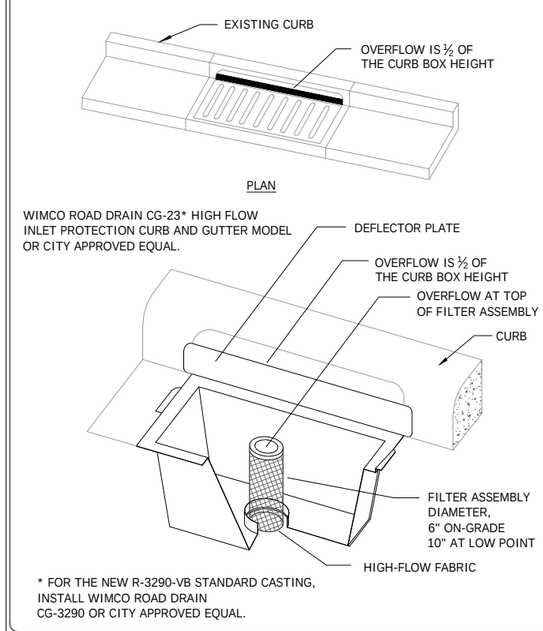

* FOR THE NEW R-3290-VB STANDARD CASTING, INSTALL WIMCO ROAD DRAIN CG-3290 OR CITY APPROVED EQUAL.

Stantec
2335 Highway 36 W
St. Paul, MN 55113
www.stantec.com

INLET PROTECTION – CATCH BASIN INSERT AFTER CURB CONSTRUCTION

CHASKA, MINNESOTA

LAST REVISION: APRIL 2008

PLATE NO. ERO–4B

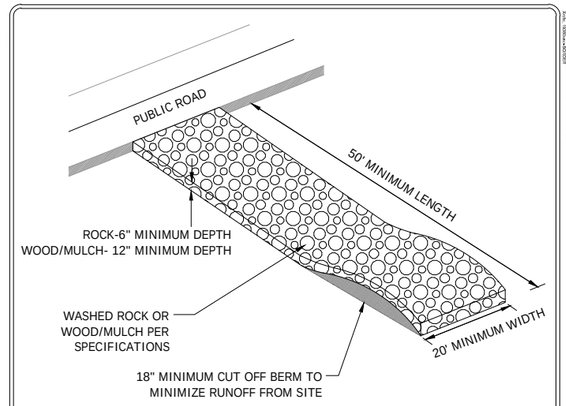

NOTES:
1. MnDOT 3733 TYPE 4 FILTER FABRIC SHALL BE PLACED UNDER ROCK OR MULCH TO STOP MUD MIGRATION THROUGH MATERIAL.
2. FUGITIVE ROCK OR MULCH WILL BE REMOVED FROM ADJACENT ROADWAYS DAILY OR MORE FREQUENTLY AS NECESSARY.
3. CONSTRUCTION ENTRANCE MUST BE CONSTRUCTED PRIOR TO THE COMMENCEMENT OF GRADING OPERATIONS ON THE SITE.
4. THE ENTRANCE MUST BE MAINTAINED IN PROPER CONDITION TO PREVENT TRACKING OF MUD OFF THE SITE. THIS MAY REQUIRE PERIODIC TOPDRESSING WITH ADDITIONAL ROCK, WOOD/MULCH, OR REMOVAL AND REINSTALLATION OF THE PAD.
5. THIS ENTRANCE WILL BE USED BY ALL VEHICLES ENTERING OR LEAVING THE PROJECT.
6. THE CONSTRUCTION ENTRANCE WILL BE REMOVED PRIOR TO THE PLACEMENT OF BITUMINOUS SURFACING.

Stantec
2335 Highway 36 W
St. Paul, MN 55113
www.stantec.com

ROCK CONSTRUCTION ENTRANCE

CHASKA, MINNESOTA

LAST REVISION: APRIL 2008

PLATE NO. ERO–7

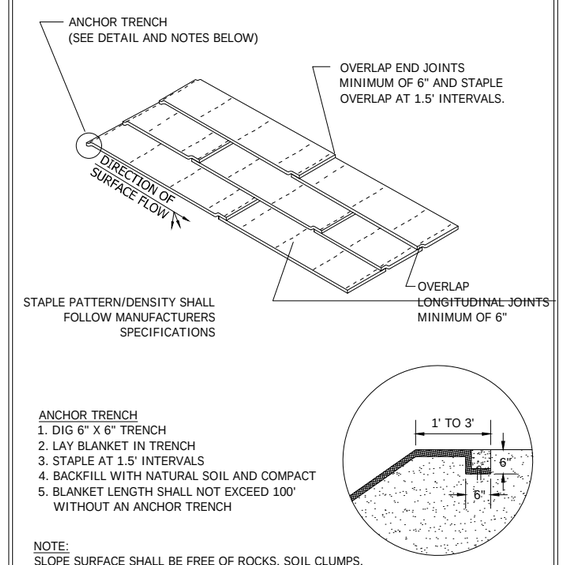

ANCHOR TRENCH
1. DIG 6" X 6" TRENCH
2. LAY BLANKET IN TRENCH
3. STAPLE AT 1.5' INTERVALS
4. BACKFILL WITH NATURAL SOIL AND COMPACT
5. BLANKET LENGTH SHALL NOT EXCEED 100' WITHOUT AN ANCHOR TRENCH

NOTE:
SLOPE SURFACE SHALL BE FREE OF ROCKS, SOIL CLUMPS, STICKS, VEHICLE IMPRINTS, AND GRASS. BLANKETS SHALL HAVE GOOD SOIL CONTACT.

Stantec
2335 Highway 36 W
St. Paul, MN 55113
www.stantec.com

EROSION CONTROL BLANKET INSTALLATION

CHASKA, MINNESOTA

LAST REVISION: APRIL 2008

PLATE NO. ERO–2

Stantec
733 Marquette Avenue, Suite 1000
Minneapolis, MN 55402
www.stantec.com

I HEREBY CERTIFY THAT THIS PLAN, SPECIFICATION, OR REPORT WAS PREPARED BY ME OR UNDER MY DIRECT SUPERVISION AND THAT I AM A DULY LICENSED PROFESSIONAL ENGINEER UNDER THE LAWS OF THE STATE OF MINNESOTA.

PRINT NAME: ERIC. S. LEMBKE

SIGNATURE:

DATE:

LIC. NO. 42748

BID SET

CITY OF CHASKA, MINNESOTA
YELLOW BRICK ROAD UTILITIES IMPROVEMENTS
EROSION CONTROL
STANDARD DETAILS

NO	REVISION	DATE

SURVEY	PR/PW/EB
DRAWN	BF
DESIGNED	ESL
CHECKED	ND
APPROVED	ESL
PROJ. NO.	193805454

SHEET NUMBER
C8.03B

REQUEST FOR ACTION
CHASKA CITY COUNCIL
4/4/2022

Subject: **Award Bid for the Creek Road Trunk Sewer Extension Street and Utility Improvements Phase 4 – Construction Materials Procurement**

Prepared By: **Matt Clark, City Engineer**

With the Creek Road trunk sewer extension that is planned this summer, Staff has been working closely with material vendors to ensure that piping and construction materials are available for this year's project. Some of the effects coming out of the recent pandemic that have affected the construction industry involve material shortages which in turn has created supply issues and market volatility. The project is unique in that larger size sewer and water materials, which the project requires, have been a challenge for suppliers to secure and provide for projects.

Prior to the City moving forward with the formal process of advertising and awarding an overall project to a General Contractor, staff has secured bids from material suppliers. Bids were opened on March 31, 2022, for procuring the sanitary sewer and water main pipe materials for the Creek Road Trunk Sewer Extension Street and Utility Improvements. Bids were received from three supplier contractors and are attached for review. The low Base Bid of $378,817.77 was received from DSG-Waterworks along with select material alternates for a total Project award of $431,932.62. DSG-Waterworks is supplier in the construction industry for the Twin City market as well as with in the upper Midwest region. The action item staff is recommending this evening is for the Council to award the Base Bid amount for procuring sewer and water pipe materials for the project plus Alternates 2 thru 5 and 7 thru 15 to DSG-Waterworks.

CITY COUNCIL ACTION REQUESTED

Motion to adopt Resolution 2022-37 , awarding the sanitary sewer and water main material bid for the Creek Road Trunk Sewer Extension Street and Utility Improvements Phase 4 to DSG-Waterworks, in the low Base Bid plus Alternates 2 thru 5 and 7 thru 15 for a total of $431,932.62.

CITY OF CHASKA
CARVER COUNTY, MINNESOTA

RESOLUTION

DATE 4/4/2022 RESOLUTION NO. 2022- 37

MOTION BY COUNCILMEMBER_____ SECOND BY COUNCILMEMBER_____

A Resolution Awarding the Bid for the Creek Road Trunk Sewer Extension Street and Utility Improvements Phase 4 – Construction Materials Procurement to DSG-Waterworks in the Low Bid Amount plus Alternates of $431,932.62

WHEREAS, pursuant to an advertisement for bids for the, Creek Road Trunk Sewer Extension Street and Utility Improvements Phase 4 – Construction Materials Procurement bids were opened and tabulated according to State Statute, and the following bids were received:

	Contractor	Total Base Bid	Alternate Bids
Low	DSG - Waterworks	$378,817.77	$53,102.86
2	Ferguson Water Works	$397,767.03	$61,216.90
3	Core and Main	$414,331.78	$78,886.91

NOW, THEREFORE, BE IT RESOLVED, that the City Council of the City of Chaska, Minnesota, does hereby award the bid for the Creek Road Trunk Sewer Extension Street and Utility Improvements Phase 4 – Materials Procurement to the low responsible bidder, DSG - Waterworks, for the low Base Bid plus Alternates Bids 2 thru 5 and 7 thru 15 in the amount of $431,932.62;

FURTHER, BE IT RESOLVED, that the Mayor and the City Administrator are authorized to execute the contract documents for said improvement project.

Passed and adopted by the City Council of the City of Chaska, Minnesota, this 4th day of April 2022.

_____
Mark Windschitl, Mayor

Attest:_____
Chaska Deputy Clerk

Stantec Consulting Services Inc.
733 Marquette Avenue, Suite 1000 Minneapolis, MN 55402

April 1, 2022

Honorable Mayor and City Council
City of Chaska
One City Hall Plaza
Chaska, MN 55318

Re: Procurement of Materials for Creek Road Trunk Sewer Extension
Street and Utility Improvements Phase 4
Stantec Project No. 193804082
Bid Results

Dear Honorable Mayor and City Council:

Bids were opened for the Project stated above on March 31, 2022. Transmitted herewith is a copy of the Bid Tabulation for your information and file. A copy will also be distributed to the Bidders once the Project has been awarded.

Bids were received from 5 Contractors. The following summarizes the results of the Bids received:

	Contractor	***Total Base Bid***
Low	DSG – Waterworks	$378,817.77
#2	Ferguson Water Works	$397,767.03
#3	Core and Main	$414,331.78

The low Bidder on the Project was DSG - Waterworks with a Total Base Bid Amount of $378,817.77. These Bids have been reviewed and found to be in order.

If the City Council wishes to award the Project to the low Bidder, then **DSG - Waterworks** should be awarded the Project on the Total Base Bid plus Alternates 2 thru 5 and 7 thru 15 in the Amount of **$431,923.62.**

Should you have any questions, please feel free to contact me at (612) 712-2079.

Sincerely,

STANTEC CONSULTING SERVICES INC.

Eric Lembke

Eric Lembke, P.E.

Enclosure

Design with community in mind

Stantec

Project Name: **Procurement of Materials for Creek Road Trunk Sewer Extension Street and Utility Improvements Phase 4**

City Project No.:

Stantec Project No.: 193804082

Bid Opening: Thursday, March 31, 2022 at 2:00 PM CDT

Owner: **Chaska, Minnesota**

I hereby certify that this is an exact reproduction of bids received.

Eric Lembke, P.E.
License No. 42748

BID TABULATION

Item Num	Item	Units	Qty	Bidder No. 1 Dakota Supply Group - Waterworks Unit Price	Total	Bidder No. 2 Ferguson Water Works - Blain Unit Price	Total	Bidder No. 3 Core and Main Unit Price	Total
	BASE BID:								
	PART 1: SANITARY								
1	18" SDR 26 PIPE	LF	322	$77.89	$25,081.87	$77.89	$25,080.58	$73.13	$23,547.86
2	18" C900 PIPE, DR 18	LF	1520	$114.92	$174,672.32	$116.14	$176,532.80	$120.31	$182,871.20
3	18" DIP PROTECTO 401 COATED PIPE	LF	40	$149.56	$5,982.24	$163.65	$6,546.00	$209.71	$8,388.40
4	8" SDR 26 PIPE	LF	196	$13.63	$2,671.09	$14.66	$2,873.36	$14.03	$2,749.88
5	8" C900 PIPE, DR 18	LF	40	$21.71	$868.52	$23.34	$933.60	$22.36	$894.40
6	8" DIP PROTECTO 401 COATED PIPE	LF	40	$59.82	$2,392.88	$65.45	$2,618.00	$83.57	$3,342.80
7	4" C900 PIPE	LF	80	$6.43	$514.08	$6.67	$533.60	$6.38	$510.40
8	8" DIP DROP MANHOLE TEE EPOXY COATED	EA	2	$294.20	$588.39	$747.88	$1,495.76	$1,090.84	$2,181.68
9	8" DIP DROP MANHOLE 90 DEGREE ELBOW EPOXY CO/	EA	2	$214.88	$429.76	$1,497.39	$2,994.78	$871.94	$1,743.88
10	4" 45 DEGREE BEND	EA	4	$62.87	$251.47	$250.67	$1,002.68	$294.78	$1,179.12
11	8" DIP JOINT RESTRAINTS	EA	2	$52.94	$105.88	$52.93	$105.86	$58.38	$116.76
12	8" PVC JOINT RESTRAINTS	EA	4	$64.90	$259.60	$64.90	$259.60	$73.14	$292.56
13	4" PVC JOINT RESTRAINTS	EA	12	$36.18	$434.21	$36.19	$434.28	$41.26	$495.12
14	JOINT RESTRAINTS BOLTS	LS	1	$413.91	$413.91	$264.96	$264.96	$852.24	$852.24
	TOTAL PART 1: SANITARY:				$214,666.22		$221,675.86		$229,166.30
	PART 2: WATERMAIN								
15	18" C900 PIPE, DR 18	LF	40	$118.66	$4,746.52	$116.14	$4,645.60	$120.31	$4,812.40
16	16" C900 PIPE, DR 18	LF	740	$85.37	$63,175.28	$92.33	$68,324.20	$94.92	$70,240.80
17	12" C900 PIPE	LF	1020	$45.87	$46,789.44	$48.80	$49,776.00	$47.23	$48,174.60
18	8" C900 PIPE	LF	1160	$21.71	$25,187.08	$23.10	$26,796.00	$22.36	$25,937.60
19	6" C900 PIPE	LF	60	$12.66	$759.60	$13.61	$816.60	$13.04	$782.40
20	12" VALVE	EA	1	$2,774.38	$2,774.38	$3,134.67	$3,134.67	$3,680.83	$3,680.83
21	8" VALVE	EA	3	$1,409.78	$4,229.35	$1,627.27	$4,881.81	$2,194.52	$6,583.56
22	6" VALVE	EA	2	$889.24	$1,778.48	$1,050.76	$2,101.52	$1,632.33	$3,264.66
23	16" X 1" SADDLE	EA	1	$168.37	$168.37	$236.80	$236.80	$163.99	$163.99
24	12" X 1" SADDLE	EA	1	$90.00	$90.00	$134.65	$134.65	$113.96	$113.96
25	8" X 1" SADDLE	EA	2	$72.20	$144.40	$108.04	$216.08	$91.45	$182.90
26	1" CORPORATION STOP	EA	4	$108.03	$432.10	$82.77	$331.08	$107.72	$430.88
27	1" CURB STOP & BOX	EA	4	$305.47	$1,221.88	$189.69	$758.76	$287.47	$1,149.88
28	1" IPS TYPE PE	LF	150	$0.95	$142.65	$0.71	$106.50	$0.83	$124.50
29	12" X 6" TEE DIP EPOXY COATED FITTING	EA	1	$392.75	$392.75	$594.20	$594.20	$725.31	$725.31
30	12" X 8" TEE DIP EPOXY COATED FITTING	EA	1	$449.55	$449.55	$635.29	$635.29	$773.13	$773.13
31	12" 45 DEGREE BEND DIP EPOXY COATED FITTING	EA	4	$342.10	$1,368.40	$530.91	$2,123.64	$643.16	$2,572.64
32	12" 22.5 DEGREE BEND DIP EPOXY COATED FITTING	EA	2	$302.45	$604.89	$502.97	$1,005.94	$540.15	$1,080.30

	BID TABULATION			Bidder No. 1 Dakota Supply Group - Waterworks		Bidder No. 2 Ferguson Water Works - Blain		Bidder No. 3 Core and Main	
Item Num	Item	Units	Qty	Unit Price	Total	Unit Price	Total	Unit Price	Total
33	12" 11.25 DEGREE BEND DIP EPOXY COATING FITTING	EA	2	$282.16	$564.31	$419.97	$839.94	$514.40	$1,028.80
34	12" PVC JOINT RETRAINTS-WATERMAIN	EA	23	$128.97	$2,966.20	$128.95	$2,965.85	$146.28	$3,364.44
35	8" X 6" REDUCER	EA	1	$97.68	$97.68	$177.52	$177.52	$223.55	$223.55
36	8" 45 DEGREE BEND DIP EPOXY COATED FITTING	EA	7	$163.70	$1,145.89	$218.61	$1,530.27	$271.37	$1,899.59
37	8" 11.25 DEGREE BEND DIP EPOXY COATED FITTING	EA	3	$146.64	$439.91	$194.78	$584.34	$243.72	$731.16
38	8" CAP WITH 1" TAP DIP EPOXY COATED FITTING	EA	1	$130.95	$130.95	$150.40	$150.40	$211.60	$211.60
39	8" HDPE JOINT RESTRAINTS-WATERMAIN	EA	3	$64.90	$194.70	$64.89	$194.67	$154.68	$464.04
40	8" PVC JOINT RESTRAINTS-WATERMAIN	EA	28	$64.90	$1,817.20	$64.89	$1,816.92	$73.14	$2,047.92
41	6" PVC JOINT RESTRAINTS-WATERMAIN	EA	8	$43.85	$350.83	$43.85	$350.80	$49.70	$397.60
42	JOINT RESTRAINTS BOLTS	LS	1	$1,988.76	$1,988.76	$861.12	$861.12	$4,002.44	$4,002.44
	TOTAL PART 2: WATERMAIN:				$164,151.55		$176,091.17		$185,165.48
	TOTAL PART 1: SANITARY:				$214,666.22		$221,675.86		$229,166.30
	TOTAL PART 2: WATERMAIN:				$164,151.55		$176,091.17		$185,165.48
	TOTAL BASE BID:				$378,817.77		$397,767.03		$414,331.78
	ALTERNATE 1								
43	18" DIP DROP MANHOLE TEE EPOXY COATED	EA	2	$0.00	$0.00	$3,555.28	$7,110.56	$6,036.87	$12,073.74
44	18" DIP DROP MANHOLE 90 DEGREE ELBOW EPOXY COATED	EA	2	$0.00	$0.00	$4,049.21	$8,098.42	$3,699.33	$7,398.66
45	SUBSTITUTE ITEM : 18" DIP DROP MANHOLE TEE	EA	2	$0.00	$0.00	$3,066.29	$6,132.58	$3,350.07	$6,700.14
46	SUBSTITUTE ITEM : 18" DIP DROP MANHOLE 90 DEGREE E	EA	2	$0.00	$0.00	$3,449.27	$6,898.54	$2,173.27	$4,346.54
	ALTERNATE 2								
47	18" x 4" DIP TEE EPOXY COATED	EA	4	$1,789.50	$7,158.00	$2,089.91	$8,359.64	$4,094.14	$16,376.56
48	SUBSTITUTE ITEM: 18" x 4" DIP TEE	EA	4	$1,599.53	$6,398.10	$1,751.36	$7,005.44	$3,343.40	$13,373.60
	ALTERNATE 3								
49	16" BUTTERFLY VALVE	EA	2	$3,423.91	$6,847.83	$3,287.50	$6,575.00	$3,788.72	$7,577.44
50	SUBSTITUTE ITEM : 16" BUTTERFLY VALVE	EA	2	$0.00	$0.00	$3,287.50	$6,575.00	$0.00	$0.00
	ALTERNATE 4								
51	16" SLEEVE DIP EPOXY COATED FITTING	EA	1	$605.05	$605.05	$1,009.22	$1,009.22	$1,216.60	$1,216.60
52	SUBSTITUTE ITEM : 16" SLEEVE	EA	1	$485.16	$485.16	$852.25	$852.25	$767.27	$767.27
	ALTERNATE 5								
53	16" CROSS DIP EPOXY COATED FITTING	EA	1	$2,231.90	$2,231.90	$3,365.44	$3,365.44	$3,995.71	$3,995.71
54	SUBSTITUTE ITEM : 16" CROSS	EA	1	$1,836.73	$1,836.73	$2,930.68	$2,930.68	$2,835.25	$2,835.25
	ALTERNATE 6								
55	16" X 18" CROSS DIP EPXOY COATED FITTING	EA	1	$0.00	$0.00	$9,770.87	$9,770.87	$0.00	$0.00
56	SUBSTITUTE ITEM: 16" X 18" CROSS DIP EPOXY COATED F	EA	1	$3,635.45	$3,635.45	$9,770.87	$9,770.87	$5,208.28	$5,208.28
	ALTERNATE 7								
57	18" X 16" REDUCER DIP EXOXY COATED FITTING	EA	1	$701.77	$701.77	$1,202.36	$1,202.36	$1,442.67	$1,442.67
58	SUBSTITUTE ITEM: 16" X 16" REDUCER DIP	EA	1	$567.12	$567.12	$1,026.48	$1,026.48	$902.71	$902.71

	BID TABULATION			Bidder No. 1 Dakota Supply Group - Waterworks		Bidder No. 2 Ferguson Water Works - Blain		Bidder No. 3 Core and Main	
Item Num	Item	Units	Qty	Unit Price	Total	Unit Price	Total	Unit Price	Total
	ALTERNATE 8								
59	16" X 12" REDUCER DIP EPOXY COATED FITTING	EA	1	$447.52	$447.52	$833.34	$833.34	$1,003.61	$1,003.61
60	SUBSTITUTE ITEM: 16" X 12" REDUCER DIP	EA	1	$358.52	$358.52	$712.53	$712.53	$568.82	$568.82
	ALTERNATE 9								
61	16" X 8" REDUCER DIP EPOXY COATING FITTING	EA	2	$503.10	$1,006.19	$788.97	$1,577.94	$947.44	$1,894.88
62	SUBSTITUTE ITEM: 16" X 8" REDUCER DIP	EA	2	$380.23	$760.45	$654.19	$1,308.38	$605.24	$1,210.48
	ALTERNATE 10								
63	16" 45 DEGREE BEND DIP EPOXY COATING FITTING	EA	4	$668.68	$2,674.70	$1,124.87	$4,499.48	$1,351.67	$5,406.68
64	SUBSTITUTE ITEM: 16" 45 DEGREE BEND DIP	EA	4	$534.49	$2,137.96	$948.40	$3,793.60	$848.27	$3,393.08
	ALTERNATE 11								
65	16" 22.5 DEGREE BEND DIP EPOXY COATED FITTING	EA	4	$636.40	$2,545.58	$1,071.68	$4,286.72	$1,289.67	$5,158.68
66	SUBSTITUTE ITEM: 16" 22.5 DEGREE BEND DIP	EA	4	$514.20	$2,056.81	$909.78	$3,639.12	$807.19	$3,228.76
	ALTERNATE 12								
67	16" 11.25 DEGREE BEND DIP EPOXY COATED FITTING	EA	2	$658.07	$1,316.14	$1,051.96	$2,103.92	$1,266.78	$2,533.56
68	SUBSTITUTE ITEM: 16" 11.25 DEGREE BEND DIP	EA	2	$541.87	$1,083.74	$909.78	$1,819.56	$834.77	$1,669.54
	ALTERNATE 13								
69	16" CAP WITH 2" TAP DIP EPOXY COATED FITTING	EA	1	$372.84	$372.84	$640.22	$640.22	$765.97	$765.97
70	SUBSTITUTE ITEM: 16" CAP WITH 2" TAP DIP	EA	1	$305.98	$305.98	$547.34	$547.34	$447.37	$447.37
	ALTERNATE 14								
71	CLOW HYDRANT	EA	2	$3,905.25	$7,810.50	$4,071.39	$8,142.78	$3,930.97	$7,861.94
72	SUBSTITUTE ITEM: CLOW HYDRANT	EA	2	$3,622.37	$7,244.74	$4,449.58	$8,899.16	$4,135.88	$8,271.76
	ALTERNATE 15								
73	18" PVC JOINT RESTRAINTS	EA	14	$342.44	$4,794.09	$342.38	$4,793.32	$437.89	$6,130.46
74	18" DIP JOINT RESTRAINTS	EA	2	$294.52	$589.03	$294.47	$588.94	$379.51	$759.02
75	18" HDPE JOINT RESTRAINTS-WATERMAIN	EA	1	$342.44	$342.44	$342.38	$342.38	$775.70	$775.70
76	16" PVC JOINT RESTRAINTS-WATERMAIN	EA	36	$276.08	$9,938.84	$276.04	$9,937.44	$340.58	$12,260.88
77	16" HDPE JOINT RESTRAINTS-WATERMAIN	EA	1	$276.08	$276.08	$276.04	$276.04	$577.03	$577.03
78	JOINT RESTRAINTS BOLTS	LS	1	$3,447.36	$3,447.36	$2,682.72	$2,682.72	$3,149.52	$3,149.52
79	SUBSTITUTE ITEM: 18" PVC JOINT RESTRAINTS	EA	14	$0.00	$0.00	$331.95	$4,647.30	$361.12	$5,055.68
80	SUBSTITUTE ITEM: 18" DIP JOINT RESTRAINTS	EA	2	$0.00	$0.00	$274.18	$548.36	$310.19	$620.38
81	SUBSTITUTE ITEM: 18" HDPE JOINT RESTRAINTS-WATERMAIN	EA	1	$0.00	$0.00	$331.95	$331.95	$698.93	$698.93
82	SUBSTITUTE ITEM: 16" PVC JOINT RESTRAINTS	EA	36	$0.00	$0.00	$267.44	$9,627.84	$290.94	$10,473.84
83	SUBSTITUTE ITEM: 16" HDPE JOINT RESTRAINTS	EA	1	$0.00	$0.00	$267.44	$267.44	$527.39	$527.39

				Bidder No. 1		Bidder No. 2		Bidder No. 3	
	BID TABULATION			**Dakota Supply Group - Waterworks**		**Ferguson Water Works - Blain**		**Core and Main**	
Item Num	**Item**	**Units**	**Qty**	**Unit Price**	**Total**	**Unit Price**	**Total**	**Unit Price**	**Total**
	Alternate No. 2				$7,158.00		$8,359.64		$16,376.56
	Alternate No. 3				$6,847.83		$6,575.00		$7,577.44
	Alternate No. 4				$605.05		$1,009.22		$1,216.60
	Alternate No. 5				$2,231.90		$3,365.44		$3,995.71
	Alternate No. 7				$701.77		$1,202.36		$1,442.67
	Alternate No. 8				$447.52		$833.34		$1,003.61
	Alternate No. 9				$1,006.19		$1,577.94		$1,894.88
	Alternate No. 10				$2,674.70		$4,499.48		$5,406.68
	Alternate No. 11				$2,545.58		$4,286.72		$5,158.68
	Alternate No. 12				$1,316.14		$2,103.92		$2,533.56
	Alternate No. 13				$372.84		$640.22		$765.97
	Alternate No. 14				$7,810.50		$8,142.78		$7,861.94
	Alternate No. 15				$19,387.84		$18,620.84		$23,652.61
	Total Alternates to be awarded				$53,105.86		$61,216.90		$78,886.91
	Total Base Bid				$378,817.77		$397,767.03		$414,331.78
	Total Alternates to be awarded				$53,105.86		$61,216.90		$78,886.91
	Total Award				$431,923.62		$458,983.93		$493,218.69
			Contractor Name and Address:	DSG - Waterworks 2601 3rd Ave. N Fargo, ND 58102		Ferguson Water Works - Blaine 1420 3rd Ave. W Shakopee, MN 55379		Care and Main 16195 54th St. NE St. Michael, MN 55376	
			Phone:	(701) 237-0222		(651) 286-2334		(763) 428-7473	
			Email:	steve.montray@dsgsupply.com		ryan.Raupp@fergusa.com		derek.johnson3@coreandmain.com	
			Signed By:	Steve Montray		Ryan Raupp		Derek Johnson	
			Title:			Area Sales Manager			
			Addenda Acknowledged:	1 and 2		1 and 2		1 and 2	

REQUEST FOR ACTION
CHASKA CITY COUNCIL
4/4/2022

Subject: **Easement Acquisition for the Creek Road Trunk Sewer Extension Street and Utility Improvements**

Prepared By: **Matt Clark, City Engineer**

The City is continuing to move forward with a project that plans to construct a 1.25 mile trunk sewer extension along Creek Road. The "Project" will not only support the current industrial development that's occurring but also the planned future industrial areas west of TH 212. The sewer extension project serves as one of the major extensions of trunk sewer for future growth areas planned well into the future for the City.

In order to construct the new improvements, easements areas have now been identified over properties that directly abut the project area planned for this year. Required by state statute, there are legal procedural steps that must be followed when impacts are proposed with public improvements to private property. The list of properties that have been identified where easements are needed for the project are listed and shown on the attached exhibits.

The overall valuation of easement areas needed for the project is estimated to be approximately $118,800 which would be funded through City trunk funds. The next step in the process is to initiate the easement acquisition process. The first order of business is to send offer letters to affected property owners. The offer letters are consistent with market value appraisals of the easement areas that have been prepared by the City's right of way consultant. City staff in conjunction with the consulting team have and will continue reaching out to property owners over the next month to discuss the appraisals and impacts with the project. The action item for the Council is to authorize said offer letters to be sent out which starts the process.

CITY COUNCIL ACTION REQUESTED

Motion to adopt Resolution No. 2022-38, authorizing City staff to send offer letters to the affected property owners for the Creek Road Trunk Sewer Extension Street and Utility Improvements Project.

CITY OF CHASKA
CARVER COUNTY, MINNESOTA

RESOLUTION

DATE 04/04/2022 RESOLUTION NO. 2022-38

MOTION BY COUNCILMEMBER_____SECOND BY COUNCILMEMBER _____

A RESOLUTION AUTHORIZING STAFF TO SEND OFFER LETTERS TO AFFECTED PROPERTY OWNERS

WHEREAS, the City of Chaska has an interest in acquiring parcels to assist in the completion of the Creek Road Trunk Sewer Extension Street and Utility Improvement Project (the "Project"); and

WHEREAS, a map of the Project area is attached as Exhibit A; and

WHEREAS, in order to complete the Project it is necessary for the City to purchase property interests from each of the properties described in Exhibit B attached hereto; and

WHEREAS, the City has hired appraisers who have completed valuation reports to provide the City with estimates of the damages caused by the City's acquisition of the property interests required for the Project; and

WHEREAS, upon completion of the valuation reports, the City must make offers of compensation to the landowners for the needed property interests consistent with the valuation reports and review of the valuation reports, which estimates the damages being incurred by the various owners as a result of the City's acquisitions; and

WHEREAS, City staff are prepared to send offer letters to the affected property owners in accordance with the market value appraisals City staff has received; and

WHEREAS, valuations of the parcels listed in Exhibit B attached hereto, totals $118,800; and

NOW, THEREFORE BE IT RESOLVED by the City Council of the City of Chaska, Minnesota, that City staff are authorized to send offer letters to the affected property owners for the Creek Road Trunk Sewer Extension Street and Utility Improvements Project in accordance with the market value appraisals City staff has received.

Passed and adopted by the City Council of the City of Chaska, Minnesota, this 4th day of April 2022.

_____

Mark Windschitl, Mayor

Attest: _____

Chaska Deputy Clerk

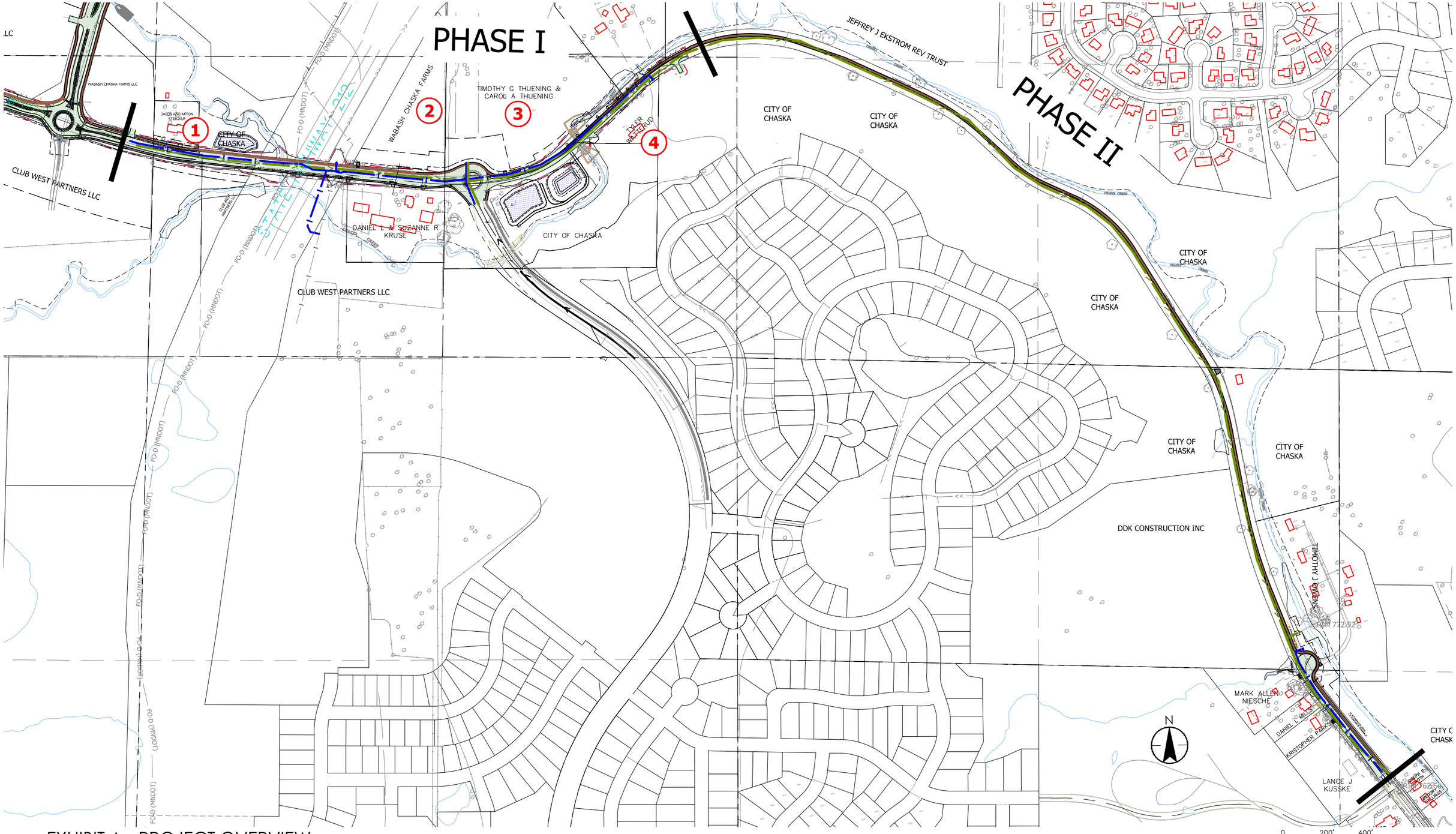

EXHIBIT A - PROJECT OVERVIEW

CHASKA, MINNESOTA

CREEK ROAD TRUNK SEWER EXTENSION STREET AND UTILITY IMPROVEMENTS - PHASE 4

FIGURE F-1

Stantec

733 Marquette Avenue, Suite 1000
Minneapolis, MN 55402
www.stantec.com

DATE: MARCH, 2022 PROJ. NO.: 193804082

EXHIBIT B						
Property Interests Required for the Creek Road Trunk Sewer Extension Street and Utility Improvement Project						
Parcel No.	Owner	PID	Address	Full Fee Acquisition (SQ FT)	Permanent Easement (SQ FT)	Temporary Easement (SQ FT)
1	STEIGAUF	300060900	4360 CREEK ROAD	-	1,403	2804
2	FREY/WABASCH	302040110	90 S 7TH ST	-	12,044	24,556
3	THEUNING	300062110	7876 ZINNIA ST	-	14,358	45,046
4	WATTERUD	300060400	4075 CREEK ROAD	-	-	3760

REQUEST FOR ACTION
CHASKA CITY COUNCIL
04/04/2022

Subject: **Public Hearing on Approval and Consent to Conduit Debt Issuance – Southwest Christian High School**

Prepared By: Noel Graczyk, Administrative Services Director

Background
Southwest Christina High School (SWCHS) propose to issue conduit debt to refinance outstanding debt and to finance new facilities to be located at their site in Chaska. This conduit debt for SWCHS will be issued by the cities of Carver and Plymouth, Minnesota since both cities have available 2022 Federal issuance authority.

Under Federal regulations, the City of Chaska as the "host" city for SWCHS must provide host approval and consent for issuance of the debt after first conducting a public hearing. The City of Chaska has no obligation with respect to the financing after conducting the public hearing and adopting the proposed resolution to consent to issuance of debt.

Recommendation
Staff recommends approval of the proposed resolution after opening and holding a public hearing on consent to issuance of conduit debt for SWCHS.

CITY COUNCIL ACTION REQUESTED
Motion to adopt Resolution 2022-33 Giving Host Approval and Consenting to the Issuance of Educational Facilities Revenue Notes Under Minnesota Statutes, Sections 469.152 Through 469.165 (Southwest Christian High School Project).

Extract of Minutes of a Meeting of the
City Council of the City of Chaska, Minnesota

Pursuant to due call and notice thereof, a regular meeting of the City Council of the City of Chaska, Minnesota, was duly held at the City Hall in said City on Monday, April 4, 2022, at 7:00 P.M.

The following members were present:

and the following were absent:

Member _____ introduced the following resolution and moved its adoption:

RESOLUTION NO. 2022-33

RESOLUTION GIVING HOST APPROVAL AND CONSENTING
TO THE ISSUANCE OF EDUCATIONAL FACILITIES REVENUE NOTES
UNDER MINNESOTA STATUTES, SECTIONS 469.152 THROUGH 469.165
(SOUTHWEST CHRISTIAN HIGH SCHOOL PROJECT)

The motion for the adoption of the foregoing resolution was duly seconded by member _____, and after full discussion thereof and upon vote being taken thereon, the following voted in favor thereof:

and the following voted against the same:

whereupon said resolution was declared duly passed and adopted.

RESOLUTION GIVING HOST APPROVAL AND CONSENTING
TO THE ISSUANCE OF EDUCATIONAL FACILITIES REVENUE NOTES
UNDER MINNESOTA STATUTES, SECTIONS 469.152 THROUGH 469.165
(SOUTHWEST CHRISTIAN HIGH SCHOOL PROJECT)

BE IT RESOLVED, by the City Council (the "Council") of the City of Chaska, Minnesota (the "City") as follows:

Section 1. General Recitals. The purpose of Minnesota Statutes, Sections 469.152 through 469.165, as amended (the "Act"), is, among other things, to promote the welfare of the State of Minnesota (the "State") by the active attraction and encouragement and development of economically sound industry and commerce to prevent so far as possible the emergence of blighted and marginal lands and areas of chronic unemployment.

Section 2. Description of the Project.

(a) The City has received from Southwest Christian High School, a Minnesota nonprofit corporation and 501(c)(3) organization (the "Borrower"), a proposal that the City: (i) consent and grant host approval to the issuance by the City of Carver, Minnesota ("Carver"), of revenue notes or other obligations, in one or more series, in an aggregate principal amount not to exceed $4,500,000 (the "Carver Note"); and (ii) grant host approval to the issuance by the City of Plymouth, Minnesota ("Plymouth" and, together with Carver, the "Issuers"), of revenue notes or other obligations, in one or more series, in an aggregate principal amount not to exceed $10,000,000 (the "Plymouth Note" and, together with the Carver Note, the "Notes"), all pursuant to the Act for the purpose of financing the Project, as hereinafter defined.

(b) The "Project" to be financed by the Notes consists of: (i) the redemption of the City's Minnesota Educational Facilities Revenue Note (Southwest Christian High School Project), Series 2012, dated November 19, 2012, the proceeds of which were used to finance, in part, the acquisition, construction and equipping of a high school facility (the "School Facility"), including classrooms, administrative offices, a media/student center, music and practice rooms, art and science rooms, and a two-stage gymnasium; (ii) the refinancing of a taxable loan evidenced by a promissory note, dated October 19, 2018, the proceeds of which financed the acquisition, construction, and equipping of additional classrooms, offices, and other spaces at the School Facility; and (iii) the financing of the acquisition, construction, and equipping, of an athletic field house and related facilities at the School Facility, all located at 1981 Bavaria Road, in the City. The School Facility will be owned and operated the Borrower.

(c) The City has been advised that the Notes, as and when issued, will not constitute a charge, lien, or encumbrance upon any property of the City, nor will the Carver Note constitute a charge, lien, or encumbrance upon any property of Carver, nor will the Plymouth Note constitute a charge, lien, or encumbrance upon any property of Plymouth. Such Notes will not be a charge against the general credit or taxing powers of the City or of the Issuers but will be payable from sums to be paid by the Borrower to the Issuers pursuant to one or more revenue agreements.

Section 3. Recital of Representations Made by the Borrower. The Borrower has agreed to pay any and all costs incurred by the City in connection with the issuance of the Notes, whether or not such issuance is carried to completion.

Section 4. Public Hearing.

(a) As required by the Act and Section 147(f) of the Code, a Notice of Public Hearing was published in the City's official newspaper and newspaper of general circulation, for a public hearing on the proposed issuance of the Notes and the proposal to undertake and finance the Project.

(b) As required by the Act and Section 147(f) of the Code, the City Council has on this same date held a public hearing on the issuance of the Notes and the proposal of the Borrower to undertake and finance the portion of the Project located within the jurisdictional limits of the City through the issuance of the Notes by the Issuers, at which all those appearing who desired to speak were heard and written comments were accepted.

Section 5. Host Approval. The City Council hereby gives the host approval required under Section 147(f) of the Code to the Notes, and, pursuant to Minnesota Statutes, Sections 469.155, Subdivision 12 and 471.656, Subdivision 2(2), the City Council hereby consents to the issuance of the Carver Note.

_____
Mayor

ATTEST:

_____
City Clerk

STATE OF MINNESOTA
COUNTY OF CARVER
CITY OF CHASKA

I, the undersigned, being the duly qualified and acting City Clerk of the City of Chaska, Minnesota, DO HEREBY CERTIFY that I have compared the attached and foregoing extract of minutes with the original thereof on file in my office, and that the same is a full, true and complete transcript of the minutes of a meeting of the City Council of said City duly called and held on the date therein indicated, insofar as such minutes relate to granting host approval to the issuance of revenue bonds for a project in the City.

WITNESS my hand this ____ day of April, 2022.

_____
City Clerk

REQUEST FOR ACTION
CHASKA CITY COUNCIL
April 4, 2022

Subject: **Chaska Water Tower Logo Discussion**

Prepared By: Matt Haefner, Water & Sewer Director

Information and Background

The City of Chaska currently has 3 elevated water towers.

- The Industrial Tower, which is a 1.5-million-gallon tank, resides up on Jonathan Boulevard North in the Jonathan Industrial Park. This tower was reconditioned/repainted in 2011. It is not scheduled for another reconditioning until 2031.

- The Hundertmark Tower, which is also a 1.5-million-gallon tank, is in the Clover Field Development adjacent to Clover Ridge Elementary. This tower is due for reconditioning this year, in 2022. The Hundertmark Tower was constructed in 2002.

- The Bavaria Tower, which is a 750,000-gallon tank, is in the Symphony Hills Development. This tower was constructed in 2008 and is scheduled to be reconditioned in 2028.

Finally, in the coming years, the City will be constructing another 1.5-million-gallon tank in Southwest Chaska, in the SW Industrial Park.

Opportunity for Change

The dates listed above provide the City with an opportunity to change the look of our water towers in the coming years. Based on this timing, if the City were to make a change, it seems as though now may be an appropriate time.

Conclusion

Staff has looked at the options of keeping our existing design or changing the water tower design and is looking for Council's input. Staff has concluded that updating the towers to match the City's official font and adding the official-colored logo is the direction we would like to go.

CITY COUNCIL ACTION REQUESTED

Provide feedback to staff on the water tower font and logo.

Hundertmark Tower's Current Logo and Current Condition

Hundertmark Tower Options

LOGO PLACEMENT ON WATER TOWER - 3D MODEL - 13' TEXT HEIGHT

CITY OF CHASKA, MN
WATER TOWER LOGO

DATE: 03-18-2022

PROJ. NO. 193805200

Stantec

LOGO PLACEMENT ON WATER TOWER - PERSPECTIVE - 13' TEXT HEIGHT

CITY OF CHASKA, MN
WATER TOWER LOGO

DATE: 03-18-2022

PROJ. NO. 193805200

Stantec

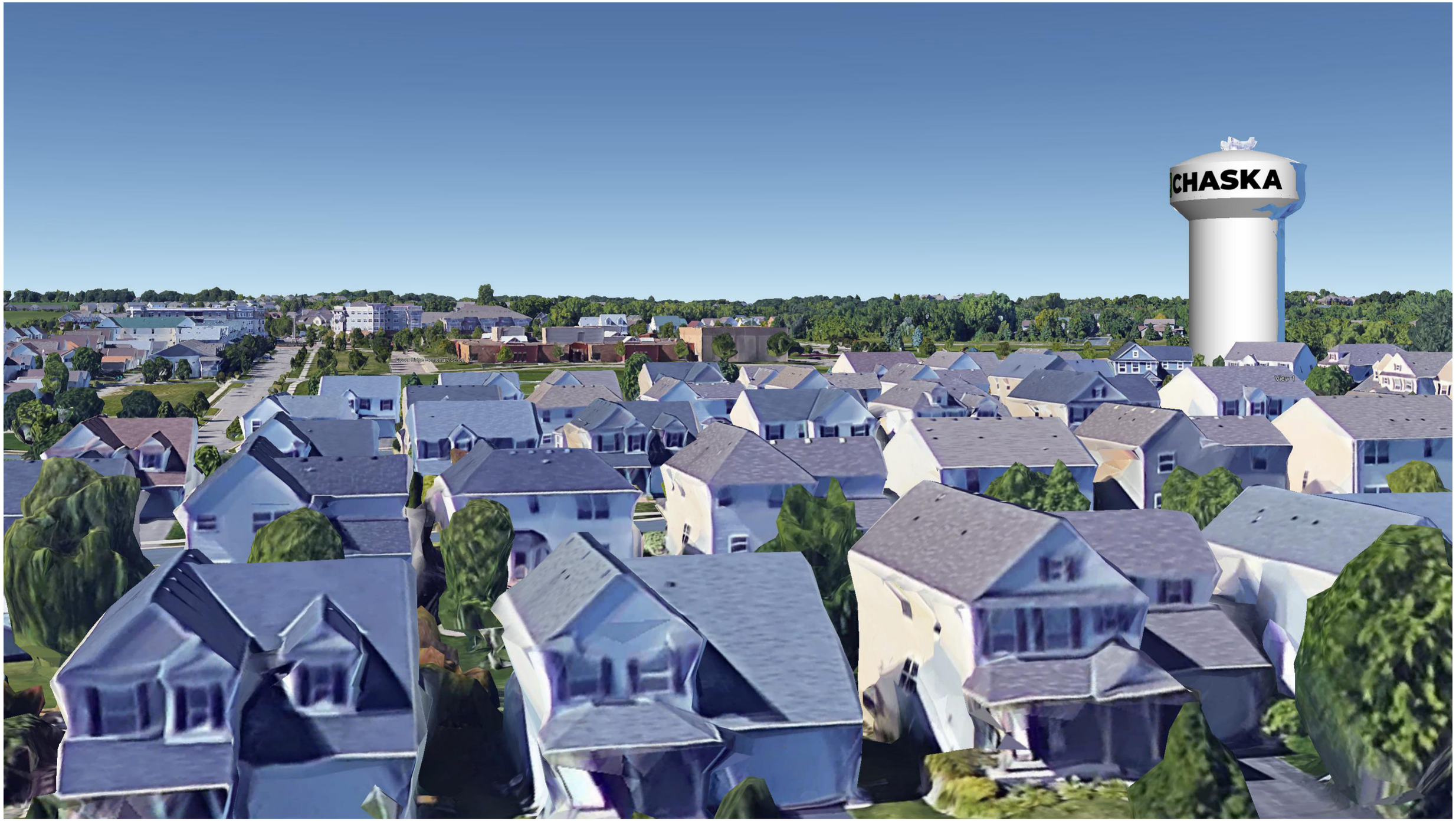

LOGO PLACEMENT ON WATER TOWER - PERSPECTIVE - 13' TEXT HEIGHT

CITY OF CHASKA, MN
WATER TOWER LOGO

DATE: 03-18-2022

PROJ. NO. 193805200

Stantec

LOGO PLACEMENT ON WATER TOWER - NEW & EXISTING LOGO COMPARISON PERSPECTIVE

CITY OF CHASKA, MN
WATER TOWER LOGO

DATE: 03-18-2022

PROJ. NO. 193805200

Stantec

LOGO PLACEMENT ON WATER TOWER - 3D MODEL - 13' TEXT HEIGHT

CITY OF CHASKA, MN
WATER TOWER LOGO

DATE: 03-18-2022

PROJ. NO. 193805200

Stantec

LOGO PLACEMENT ON WATER TOWER - PERSPECTIVE - 13' TEXT HEIGHT

CITY OF CHASKA, MN
WATER TOWER LOGO

DATE: 03-18-2022

PROJ. NO. 193805200

Stantec

LOGO PLACEMENT ON WATER TOWER - PERSPECTIVE - 13' TEXT HEIGHT

CITY OF CHASKA, MN
WATER TOWER LOGO

DATE: 03-16-2022

PROJ. NO. 193805200

Stantec

LOGO PLACEMENT ON WATER TOWER - NEW & EXISTING LOGO COMPARISON PERSPECTIVE

CITY OF CHASKA, MN
WATER TOWER LOGO

DATE: 03-16-2022

PROJ. NO. 193805200

Stantec

CLAIMS ROSTER REPORT

FOR COUNCIL MEETING: **April 4, 2022**

Paid and Unpaid Invoices:
Check #'s 341767-341919 **$1,049,365.65**

Paid Electronic Invoices:
Wire #'s 3174-3199 **$3,816,355.96**

Amount for Approval-Council Meeting: April 4, 2022	**$4,865,721.61**

Checks

INVOICE	P.O.	INV DATE	CHECK RUN	CHECK #	INVOICE NET	DUE DATE	TYPE	STS	INVOICE DESCRIPTION
100016 ABM EQUIPMENT & SUPPLY INC									
0170375-IN CHECK DATE: 04/05/2022		03/17/2022	040522	341783	2,420.95	04/17/2022	INV	PD	#706 REPAIRS WITH LABOR
103825 ACUSHNET COMPANY									
912767687 CHECK DATE: 04/05/2022		03/14/2022	040522	341784	1,194.10	04/13/2022	INV	PD	RESALE
912777050 CHECK DATE: 04/05/2022		03/15/2022	040522	341784	62.18	07/13/2022	INV	PD	RESALE
912801250 CHECK DATE: 04/05/2022		03/17/2022	040522	341784	1,633.50	05/16/2022	INV	PD	RESALE
912801251 CHECK DATE: 04/05/2022		03/17/2022	040522	341784	292.37	05/16/2022	INV	PD	RESALE
912801259 CHECK DATE: 04/05/2022		03/17/2022	040522	341784	3,194.79	04/16/2022	INV	PD	RESALE
912810542 CHECK DATE: 04/05/2022		03/18/2022	040522	341784	912.35	04/17/2022	INV	PD	RESALE
912824823 CHECK DATE: 04/05/2022		03/21/2022	040522	341784	139.42	05/20/2022	INV	PD	RESALE
912824832 CHECK DATE: 04/05/2022		03/21/2022	040522	341784	243.94	04/20/2022	INV	PD	RESALE
912824929 CHECK DATE: 04/05/2022		03/21/2022	040522	341784	250.16	07/19/2022	INV	PD	RESALE
912835445 CHECK DATE: 04/05/2022		03/22/2022	040522	341784	3,195.51	04/21/2022	INV	PD	RESALE
912836190 CHECK DATE: 04/05/2022		03/22/2022	040522	341784	1,825.36	04/21/2022	INV	PD	RESALE
912843850 CHECK DATE: 04/05/2022		03/23/2022	040522	341784	135.73	04/22/2022	INV	PD	RESALE
912843903 CHECK DATE: 04/05/2022		03/23/2022	040522	341784	212.32	05/22/2022	INV	PD	RESALE
912843904 CHECK DATE: 04/05/2022		03/23/2022	040522	341784	292.42	05/22/2022	INV	PD	RESALE
912852408 CHECK DATE: 04/05/2022		03/24/2022	040522	341784	858.61	07/22/2022	INV	PD	RESALE
912852521		03/24/2022	040522	341784	94.70	04/23/2022	INV	PD	RESALE

INVOICE	P.O.	INV DATE	CHECK RUN	CHECK #	INVOICE NET	DUE DATE	TYPE	STS	INVOICE DESCRIPTION
CHECK DATE: 04/05/2022									
912852889		03/24/2022	040522	341784	146.02	07/22/2022	INV	PD	DEMO/RENTAL
CHECK DATE: 04/05/2022									
912874954		03/28/2022	040522	341784	195.02	04/27/2022	INV	PD	RESALE
CHECK DATE: 04/05/2022									
					14,878.50				
100843 AH HERMEL COMPANY									
918986		03/17/2022	040522	341785	131.52	04/17/2022	INV	PD	WATER FOR FD
CHECK DATE: 04/05/2022									
110316 AHEAD LLC									
INV0513880		03/18/2022	040522	341786	989.10	04/17/2022	INV	PD	RESALE
CHECK DATE: 04/05/2022									
100073 AMARIL UNIFORM CO									
IV226284		03/17/2022	040522	341787	265.98	04/17/2022	INV	PD	B. HEITZ CITY ISSUED FR C
CHECK DATE: 04/05/2022									
100119 SHAKOPEE VALLEY FORD									
320863FOW		03/21/2022	040522	341788	1,009.34	04/21/2022	INV	PD	Squad Car Stock Parts
CHECK DATE: 04/05/2022									
100122 ARAMARK REFRESHMENT SERVICES									
1228675		03/23/2022	040522	341789	72.81	04/23/2022	INV	PD	Coffee and Coffee Decante
CHECK DATE: 04/05/2022									
5097550		03/18/2022	040522	341790	199.72	04/18/2022	INV	PD	COFFEE FOR FD
CHECK DATE: 04/05/2022									
					272.53				
109198 ARCHER MECHANICAL									
27578		03/21/2022	040522	341791	3,846.68	04/21/2022	INV	PD	CCC boiler parts
CHECK DATE: 04/05/2022									
110405 ARTIS, STEVEN P									
10007310		03/08/2022	033122	341778	372.24	04/08/2022	INV	PD	CREDIT BALANCE REFUND-101
CHECK DATE: 03/31/2022									

INVOICE	P.O.	INV DATE	CHECK RUN	CHECK #	INVOICE NET	DUE DATE	TYPE	STS	INVOICE DESCRIPTION
100146 ASPEN MILLS INC									
290997 CHECK DATE: 04/05/2022		03/23/2022	040522	341792	59.99	04/22/2022	INV	PD	DUTY UNIFORM-KATZNER
290998 CHECK DATE: 04/05/2022		03/23/2022	040522	341792	289.71	04/22/2022	INV	PD	DUTY UNIFORM-BONNEMA
					349.70				
100155 AUBURN MANOR									
APR 2022 CHECK DATE: 04/05/2022	220004	04/01/2022	040522	341793	200.00	04/30/2022	INV	PD	APR SENIOR CITIZEN DONATI
110440 BAILEY ***, DEBORAH									
10006708 CHECK DATE: 04/05/2022		03/21/2022	040522	341794	171.07	04/21/2022	INV	PD	CREDIT BALANCE REFUND-110
107572 BAKER TILLY VIRCHOW KRAUSE LLP									
BTMA12653 CHECK DATE: 04/05/2022		12/30/2021	040522	341795	26,325.00	04/30/2022	INV	PD	MA FEES-2021 LEASE PURCHA
100201 BCBSM INC									
220303493798 CHECK DATE: 03/29/2022		03/04/2022	032922	341771	166,275.73	03/21/2022	INV	PD	APR EMP INS PREM-MEDICAL
102279 BOLTON & MENK INC									
0285938 CHECK DATE: 04/05/2022		03/18/2022	040522	341796	496.50	04/18/2022	INV	PD	2022 FUNDING ASSISTANCE-4
100226 BRAUN INTERTEC CORPORATION									
B287686 CHECK DATE: 04/05/2022		03/23/2022	040522	341797	584.00	04/23/2022	INV	PD	YELLOW BRICK RD GROUND PE
100324 NEW LINE CUSTOM UPHOLSTERY INC									
24947 CHECK DATE: 04/05/2022		03/18/2022	040522	341798	225.00	04/17/2022	INV	PD	#108 STREET - CUSHION COV
24948 CHECK DATE: 04/05/2022		03/18/2022	040522	341798	225.00	04/17/2022	INV	PD	#90 SEWER-CUSHION COVER

INVOICE	P.O.	INV DATE	CHECK RUN	CHECK #	INVOICE NET	DUE DATE	TYPE	STS	INVOICE DESCRIPTION
					450.00				
100275 CALLAWAY GOLF									
934494440 CHECK DATE: 04/05/2022		03/18/2022	040522	341799	349.20	07/16/2022	INV	PD	RESALE
934502598 CHECK DATE: 04/05/2022		03/19/2022	040522	341799	736.32	12/01/2022	INV	PD	DEMO/RENTALS
934522082 CHECK DATE: 04/05/2022		03/23/2022	040522	341799	476.50	12/01/2022	INV	PD	DEMO/RENTALS
934542859 CHECK DATE: 04/05/2022		03/25/2022	040522	341799	-459.00	03/25/2022	CRM	PD	RESALE-CREDIT
					1,103.02				
100323 CDW GOVERNMENT INC									
T368291 CHECK DATE: 04/05/2022		03/11/2022	040522	341800	33.90	04/10/2022	INV	PD	CABLES FOR PD
T389358 CHECK DATE: 04/05/2022		03/11/2022	040522	341800	3,437.60	04/10/2022	INV	PD	IT EQUIP-SURFACE PROS (2)
T400339 CHECK DATE: 04/05/2022		03/12/2022	040522	341800	54.24	04/11/2022	INV	PD	PATCH PANELS IT & CCC
T640136 CHECK DATE: 04/05/2022		03/17/2022	040522	341800	64.58	04/16/2022	INV	PD	CMS TYPE COVER REPLACEMEN
T678286 CHECK DATE: 04/05/2022		03/18/2022	040522	341800	164.22	04/17/2022	INV	PD	IT SURFACE PENS
T678290 CHECK DATE: 04/05/2022		03/18/2022	040522	341800	82.11	04/17/2022	INV	PD	SURFACE PEN-HR NEW HIRE
T899124 CHECK DATE: 04/05/2022		03/23/2022	040522	341800	-50.86	04/17/2022	CRM	PD	CREDIT-PATCH PANEL RETURN
T911297 CHECK DATE: 04/05/2022		03/23/2022	040522	341800	50.60	04/22/2022	INV	PD	IT NETWORK CABLES
					3,836.39				
100332 CENTERPOINT ENERGY RESOURCES CORP									
109045922/FEB22 CHECK DATE: 03/22/2022		03/07/2022	032222	341767	14,694.06	04/04/2022	INV	PD	FEB 1661 PARK RIDGE DR GA
109052076/FEB22 CHECK DATE: 03/22/2022		03/07/2022	032222	341767	9,589.57	04/04/2022	INV	PD	FEB 1611 PARK RIDGE DR
80000146268/FEB22		03/14/2022	032922	341772	9,347.31	04/08/2022	INV	PD	FEB GAS SVC

INVOICE	P.O.	INV DATE	CHECK RUN	CHECK #	INVOICE NET	DUE DATE	TYPE	STS	INVOICE DESCRIPTION
CHECK DATE: 03/29/2022									
80000167793/FEB22		03/14/2022	032922	341772	78.60	04/08/2022	INV	PD	FEB CITY PKS GAS SVC
CHECK DATE: 03/29/2022									
80000167843/FEB22		03/14/2022	032922	341772	5,754.52	04/08/2022	INV	PD	FEB GAS SVC
CHECK DATE: 03/29/2022									
					39,464.06				
100337 QWEST CORPORATION									
284793606		03/16/2022	033122	341779	2,086.40	04/15/2022	INV	PD	MAR INTERNET SERVICE
CHECK DATE: 03/31/2022									
313196254/MAR22		03/18/2022	032922	341773	588.41	04/15/2022	INV	PD	MAR CITY HALL LOC PHN SVC
CHECK DATE: 03/29/2022									
313249294/MAR22		03/11/2022	032222	341768	54.21	04/08/2022	INV	PD	MAR TC MAINT LOC PHN SVC
CHECK DATE: 03/22/2022									
313408124/MAR22		03/11/2022	032222	341768	125.73	04/08/2022	INV	PD	MAR TC MAINT LOC PHN SVC
CHECK DATE: 03/22/2022									
314238800/MAR22		03/18/2022	032922	341773	73.19	04/15/2022	INV	PD	MAR MSB LOCAL PHN SVC
CHECK DATE: 03/29/2022									
					2,927.94				
100338 QWEST CORPORATION									
202001327/MAR22		03/21/2022	033122	341780	40.95	04/18/2022	INV	PD	MAR T1 FOR PHONE SYSTEM
CHECK DATE: 03/31/2022									
100379 CITY OF CHANHASSEN									
98951		03/08/2022	040522	341801	1,331.40	04/08/2022	INV	PD	Chanhassen Dinner Theatre
CHECK DATE: 04/05/2022									
100362 CHASKA HIGH SCHOOL									
JAN-FEB 2022		03/22/2022	040522	341802	6,701.00	04/22/2022	INV	PD	HOCKEY GATE RECEIPTS JAN-
CHECK DATE: 04/05/2022									
100350 CHASKA, CITY OF									
SHADE TREE 2022		03/17/2022	032222	341769	200.00	03/17/2022	INV	PD	START-UP CASH FOR SHADE T
CHECK DATE: 03/22/2022									
105431 EUGENE FLAUVIN MILLER									

INVOICE	P.O.	INV DATE	CHECK RUN	CHECK #	INVOICE NET	DUE DATE	TYPE	STS	INVOICE DESCRIPTION
99044		03/11/2022	040522	341803	6,835.26	04/11/2022	INV	PD	#1181 FRONT END REPAIR (I
CHECK DATE: 04/05/2022									
103891 CITY OF SHAKOPEE									
10371		03/15/2022	040522	341804	16,800.00	04/14/2022	INV	PD	2022 Membership Dues-SW M
CHECK DATE: 04/05/2022									
100416 ROGER CLEVELAND GOLF CO INC									
6834079 SO		03/17/2022	040522	341805	134.75	07/15/2022	INV	PD	RESALE
CHECK DATE: 04/05/2022									
100428 COBRA GOLF INC									
DC180504		12/13/2021	040522	341806	-2,516.20	03/31/2022	CRM	PD	CREDIT-RETURNED CLUBS
CHECK DATE: 04/05/2022									
G2818625		03/14/2022	040522	341806	388.36	09/10/2022	INV	PD	DEMO/RENTALS
CHECK DATE: 04/05/2022									
G2827331		03/15/2022	040522	341806	253.57	09/11/2022	INV	PD	DEMO/RENTAL
CHECK DATE: 04/05/2022									
G2838442		03/21/2022	040522	341806	753.44	04/20/2022	INV	PD	RESALE
CHECK DATE: 04/05/2022									
G2848854		03/28/2022	040522	341806	1,735.75	06/26/2022	INV	PD	RESALE
CHECK DATE: 04/05/2022									
					614.92				
100768 CODE 4 SERVICES INC									
7086		03/23/2022	040522	341807	488.45	04/22/2022	INV	PD	CRADLEPOINT FOR RIVER GAT
CHECK DATE: 04/05/2022									
100436 COMCAST CORPORATION									
0055482/MAR22-FD		03/12/2022	032222	341770	6.75	04/06/2022	INV	PD	MAR FD CABLE
CHECK DATE: 03/22/2022									
98931		03/09/2022	032222	341770	79.78	04/03/2022	INV	PD	Mar PD Cable
CHECK DATE: 03/22/2022									
					86.53				
104611 COMMERCIAL FURNITURE SERVICES INC									
91128-0		03/15/2022	040522	341808	315.48	04/15/2022	INV	PD	tool rail bar & paper tra
CHECK DATE: 04/05/2022									

INVOICE	P.O.	INV DATE	CHECK RUN	CHECK #	INVOICE NET	DUE DATE	TYPE	STS	INVOICE DESCRIPTION
103617 CONTINENTAL SAFETY EQUIPMENT INC									
454492		03/09/2022	040522	341809	109.00	04/09/2022	INV	PD	HARD HATS
CHECK DATE: 04/05/2022									
110442 CROOK, CHRISTOPHER									
10012892		03/21/2022	040522	341810	39.20	04/21/2022	INV	PD	CREDIT BALANCE REFUND-136
CHECK DATE: 04/05/2022									
110391 CUMMINS INC									
E4-5225		03/22/2022	040522	341811	306.82	04/22/2022	INV	PD	#312 FIRE TRUCK PARTS
CHECK DATE: 04/05/2022									
110412 IMPERIAL BAG AND PAPER CO LLC									
3899880		02/22/2022	040522	341812	7,102.77	03/08/2022	INV	PD	Kaivac machine for cleani
CHECK DATE: 04/05/2022									
107812 SCOTT CONGDON									
5863-1		03/19/2022	040522	341813	51.00	04/18/2022	INV	PD	Business Cards-Samantha M
CHECK DATE: 04/05/2022									
5863-2		03/19/2022	040522	341813	51.00	04/18/2022	INV	PD	Business Cards-Elise Durb
CHECK DATE: 04/05/2022									
					102.00				
110448 DIVERSIFIED POWER SERVICES INC									
191106-354		03/29/2022	040522	341814	2,973.75	04/28/2022	INV	PD	BLUFF CRK SUB BREAKER REP
CHECK DATE: 04/05/2022									
100549 DORSEY AND WHITNEY LLP									
3735097		03/16/2022	040522	341815	2,842.00	04/16/2022	INV	PD	THE LOOP-TITLE/DEED ISSUE
CHECK DATE: 04/05/2022									
100550 DOTCOM PRINTING INC									
26383		03/18/2022	040522	341816	809.40	04/18/2022	INV	PD	TC MAINT UNIFORM SHIRTS
CHECK DATE: 04/05/2022									
100566 DVS									

INVOICE	P.O.	INV DATE	CHECK RUN	CHECK #	INVOICE NET	DUE DATE	TYPE	STS	INVOICE DESCRIPTION
C1690030		03/24/2022	040522	341817	28.50	03/24/2022	INV	PD	Registration Squads 1098/
CHECK DATE: 04/05/2022									
106824 EMERSON BRADY									
99160		03/24/2022	040522	341818	6,300.00	04/24/2022	INV	PD	TREE REMOVAL-HWY 41 PROJE
CHECK DATE: 04/05/2022									
109763 EBERT, NATHAN									
98921		03/01/2022	040522	341819	85.89	04/17/2022	INV	PD	HARD HAT WITH HEAD LAMP
CHECK DATE: 04/05/2022									
110169 FELHABER LARSON FENLON AND VOGT PA									
685456		03/02/2022	040522	341820	10,107.00	04/02/2022	INV	PD	TH 41 PROJECT-PROPERTY AC
CHECK DATE: 04/05/2022									
100653 FERGUSON ENTERPRISES INC									
0210589		03/22/2022	040522	341822	231.44	04/22/2022	INV	PD	#921 VALVE FOR JETTER TRU
CHECK DATE: 04/05/2022									
9167881		03/16/2022	040522	341821	21.58	04/16/2022	INV	PD	CAULK FOR KITCHEN EXHAUST
CHECK DATE: 04/05/2022									
					253.02				
106319 CHAD JEREMY FIGG									
February 2022		03/16/2022	040522	341823	521.40	04/16/2022	INV	PD	February 2022 Tae Kwon Do
CHECK DATE: 04/05/2022									
January 2022		03/16/2022	040522	341823	381.36	04/16/2022	INV	PD	January 2022 Tae Kwon Do
CHECK DATE: 04/05/2022									
					902.76				
109941 BRIDGETOWER OPCO LLC									
745348209		03/21/2022	040522	341824	112.90	04/21/2022	INV	PD	CREEK RD TRUNK SEWER EXT,
CHECK DATE: 04/05/2022									
100672 BDG INC									
27279		03/22/2022	040522	341825	129.70	04/21/2022	INV	PD	#921 JETTER TRUCK PARTS
CHECK DATE: 04/05/2022									

INVOICE	P.O.	INV DATE	CHECK RUN	CHECK #	INVOICE NET	DUE DATE	TYPE	STS	INVOICE DESCRIPTION
100707 GEAR FOR SPORTS									
41900705		03/15/2022	040522	341826	1,459.20	04/15/2022	INV	PD	RESALE
CHECK DATE: 04/05/2022									
41900965		03/15/2022	040522	341826	836.33	04/15/2022	INV	PD	RESALE
CHECK DATE: 04/05/2022									
41901479		03/17/2022	040522	341826	980.40	04/17/2022	INV	PD	RESALE
CHECK DATE: 04/05/2022									
41902304		03/22/2022	040522	341826	623.20	04/22/2022	INV	PD	RESALE
CHECK DATE: 04/05/2022									
					3,899.13				
108000 GEORGE PHILLIPS CURLING STONE									
957253		03/12/2022	040522	341827	688.50	04/12/2022	INV	PD	Scraper Blade Sharpening
CHECK DATE: 04/05/2022									
100759 WW GRAINGER INC									
9248733363		03/17/2022	040522	341829	1,260.92	04/16/2022	INV	PD	SUPPLIES-TRASH BAGS, TB C
CHECK DATE: 04/05/2022									
9253072624		03/22/2022	040522	341828	199.41	04/22/2022	INV	PD	EXHAUST FAN FOR LIBRARY B
CHECK DATE: 04/05/2022									
					1,460.33				
109731 HAUS OF GREY LLC									
425267		03/28/2022	040522	341830	1,491.27	04/15/2022	INV	PD	RESALE
CHECK DATE: 04/05/2022									
100810 HAWKINS INC									
6140223		03/11/2022	040522	341831	4,414.21	04/25/2022	INV	PD	WTP CHEMICALS
CHECK DATE: 04/05/2022									
100821 HEALTHPARTNERS INC									
111332411		03/09/2022	032922	341774	6,932.27	04/01/2022	INV	PD	APR EMP INS PREM-DENTAL
CHECK DATE: 03/29/2022									
100830 HELSTROM, DEREK									
98939		03/04/2022	040522	341832	21.06	04/18/2022	INV	PD	MILEAGE 2/1-3/4
CHECK DATE: 04/05/2022									

INVOICE	P.O.	INV DATE	CHECK RUN	CHECK #	INVOICE NET	DUE DATE	TYPE	STS	INVOICE DESCRIPTION
100848 HIGH TECH CLEANING INC									
17503		03/01/2022	040522	341833	6,253.50	04/01/2022	INV	PD	Feb CCC bathroom/locker r
CHECK DATE: 04/05/2022									
100859 HOISINGTON KOEGLER GROUP INC									
022-018-1		03/20/2022	040522	341834	2,992.50	04/20/2022	INV	PD	LIBRARY PLANNING SVC-FEB
CHECK DATE: 04/05/2022									
106982 HUE LIFE LLC									
2318		11/04/2021	040522	341835	6,592.80	04/15/2022	INV	PD	2021 Council Retreat
CHECK DATE: 04/05/2022									
100879 PRAIRIE TECHNOLOGIES INC OF MN									
220214		02/28/2022	040522	341836	4,169.02	02/28/2022	INV	PD	Ice Rink-2 MUA
CHECK DATE: 04/05/2022									
100889 INTERNATIONAL CITY MGMT ASSN RETIREMENT CORP									
2022/0325-ICMA		03/25/2022	032922	341775	5,857.89	03/25/2022	INV	PD	032522 Payroll 457 & Roth
CHECK DATE: 03/29/2022									
104751 IMPACT MAILING OF MINNESOTA INC									
157760		03/29/2022	040522	341837	1,121.81	04/30/2022	INV	PD	Mar Reminders
CHECK DATE: 04/05/2022									
157761		03/29/2022	040522	341837	579.22	04/30/2022	INV	PD	Mar Disconnects
CHECK DATE: 04/05/2022									
157763		03/29/2022	040522	341837	260.54	04/30/2022	INV	PD	Mar Final Bills
CHECK DATE: 04/05/2022									
157799		03/30/2022	040522	341837	9,973.88	04/30/2022	INV	PD	Mar Bills
CHECK DATE: 04/05/2022									
					11,935.45				
100925 INTOXIMETERS INC									
703300		03/16/2022	040522	341838	182.50	04/16/2022	INV	PD	Drygas/mouthpiece
CHECK DATE: 04/05/2022									
100002 2ND WIND EXERCISE EQUIPMENT INC									

INVOICE	P.O.	INV DATE	CHECK RUN	CHECK #	INVOICE NET	DUE DATE	TYPE	STS	INVOICE DESCRIPTION
21-070343		03/04/2022	040522	341839	85.00	04/04/2022	INV	PD	Service on Fitness Equipm
CHECK DATE: 04/05/2022									
108437 JOHNSON, KELLY									
2011862.002		03/22/2022	040522	341840	10.74	04/22/2022	INV	PD	RFD-PICKLEBALL/RACQUETBAL
CHECK DATE: 04/05/2022						PAYEE: JOHNSON, KELLY			
108948 AUDRANN INC									
1361078		03/17/2022	040522	341841	108.66	05/01/2022	INV	PD	ZONE VALVE FOR SQUAD ROOM
CHECK DATE: 04/05/2022									
110445 CHAD TAYLOR									
676014		02/09/2022	040522	341842	792.72	03/15/2022	INV	PD	Bumper Covers +INTEREST
CHECK DATE: 04/05/2022									
110349 KILLMER ELECTRIC CO INC									
193805234-2		02/23/2022	040522	341843	416,804.90	04/09/2022	INV	PD	OAK ST STORM WATER PUMP S
CHECK DATE: 04/05/2022									
101043 LANO EQUIPMENT INC									
01-898094		03/14/2022	040522	341844	43,050.00	04/14/2022	INV	PD	#223 NEW BOBCAT W/ TRADE-
CHECK DATE: 04/05/2022									
01-899822		03/23/2022	040522	341844	250.00	04/23/2022	INV	PD	STUMP GRINDER RENTAL - PA
CHECK DATE: 04/05/2022									
					43,300.00				
101071 LENZEN CHEVROLET BUICK INC									
84764		03/21/2022	040522	341845	15.74	04/21/2022	INV	PD	#208 PARK HANDLE
CHECK DATE: 04/05/2022									
101097 LOCATORS & SUPPLIES INC									
0298300-IN		03/21/2022	040522	341846	400.00	04/21/2022	INV	PD	TRAINING FOR NEW LOCATOR
CHECK DATE: 04/05/2022									
0298314-IN		03/21/2022	040522	341846	120.78	04/21/2022	INV	PD	WINTER GLOVES
CHECK DATE: 04/05/2022									
					520.78				
105139 LUBE TECH AND PARTNERS LLC									

INVOICE	P.O.	INV DATE	CHECK RUN	CHECK #	INVOICE NET	DUE DATE	TYPE	STS	INVOICE DESCRIPTION
2862391		03/13/2022	040522	341847	293.33	04/12/2022	INV	PD	FUELS AND LUBES
CHECK DATE: 04/05/2022									
105710 MACQUEEN EMERGENCY GROUP									
P02031		03/29/2022	040522	341848	2,571.56	04/29/2022	INV	PD	HOSES FOR FIRE TRUCKS
CHECK DATE: 04/05/2022									
P06727		03/30/2022	040522	341848	92.42	04/30/2022	INV	PD	E11 PARTS
CHECK DATE: 04/05/2022									
					2,663.98				
101124 MACQUEEN EQUIPMENT									
P40399		03/08/2022	040522	341849	416.68	04/08/2022	INV	PD	#921 SEWER PART
CHECK DATE: 04/05/2022									
P40649		03/17/2022	040522	341849	1,178.99	04/17/2022	INV	PD	#921 VACTOR LEADER HOSE
CHECK DATE: 04/05/2022									
					1,595.67				
103449 MADDEN GALANTER HANSEN LLP									
98955		03/13/2022	040522	341850	2,162.96	04/04/2022	INV	PD	FEB LEGAL-LABOR RELATIONS
CHECK DATE: 04/05/2022									
101177 METROPOLITAN AREA MANAGEMENT ASSOC									
1137		03/16/2022	040522	341851	37.50	04/16/2022	INV	PD	March 24 Luncheon-E Durbi
CHECK DATE: 04/05/2022									
110437 MN ASSOC OF PROPERTY & EVIDENCE TECHNICIANS									
98884		03/15/2022	040522	341852	35.00	04/15/2022	INV	PD	Membership dues - J Vilks
CHECK DATE: 04/05/2022									
106661 MAYER LUMBER COMPANY INC									
213066		03/23/2022	040522	341853	161.15	04/23/2022	INV	PD	STAPLERS AND STAPLES FOR
CHECK DATE: 04/05/2022									
110441 MAYO, MEGAN									
10008925		03/21/2022	040522	341854	225.29	04/21/2022	INV	PD	CREDIT BALANCE REFUND-146
CHECK DATE: 04/05/2022									

INVOICE	P.O.	INV DATE	CHECK RUN	CHECK #	INVOICE NET	DUE DATE	TYPE	STS	INVOICE DESCRIPTION
101168 MELCHERT HUBERT SJODIN PLLP									
160983 CHECK DATE: 04/05/2022		03/22/2022	040522	341855	518.30	04/22/2022	INV	PD	COUNCIL MTGS
160987 CHECK DATE: 04/05/2022		03/22/2022	040522	341855	2,196.25	04/22/2022	INV	PD	CITY SQUARE WEST
160988 CHECK DATE: 04/05/2022		03/22/2022	040522	341855	75.30	04/22/2022	INV	PD	UNITED PROPERTIES-COSTCO-
160991 CHECK DATE: 04/05/2022		03/22/2022	040522	341855	5,970.00	04/22/2022	INV	PD	GENERAL FUND
160992 CHECK DATE: 04/05/2022		03/22/2022	040522	341855	1,507.45	04/22/2022	INV	PD	PLANNING & ZONING
160993 CHECK DATE: 04/05/2022		03/22/2022	040522	341855	2,368.10	04/22/2022	INV	PD	ENERGY FRANCHISE ORDINANC
160994 CHECK DATE: 04/05/2022		03/22/2022	040522	341855	19.90	04/22/2022	INV	PD	CABLE FRANCHISE
160995 CHECK DATE: 04/05/2022		03/22/2022	040522	341855	1,762.00	04/22/2022	INV	PD	DEL WEBB-HAMMERS PROPERTY
160996 CHECK DATE: 04/05/2022		03/22/2022	040522	341855	75.30	04/22/2022	INV	PD	LANO GRAVEL PIT
160997 CHECK DATE: 04/05/2022		03/22/2022	040522	341855	2,632.95	04/22/2022	INV	PD	ANNEXATION OF KELZER PROP
					17,125.55				
101187 METRO SALES INC									
INV2008577 CHECK DATE: 04/05/2022		03/17/2022	040522	341856	136.00	04/16/2022	INV	PD	Ricoh MP C3003 Color
INV2012309 CHECK DATE: 04/05/2022		03/24/2022	040522	341856	122.00	04/23/2022	INV	PD	APR FD COPIER
					258.00				
101204 MIDWEST PLAYSCAPES INC									
9460 CHECK DATE: 04/05/2022		03/18/2022	040522	341857	1,790.00	04/18/2022	INV	PD	CORTINA WOODS PARK IMPROV
110447 MIKE FINDLING AGENCY									
323 CHECK DATE: 04/05/2022		03/23/2022	040522	341858	2,500.00	04/04/2022	INV	PD	F&I Band Deposit- The Hyp

INVOICE	P.O.	INV DATE	CHECK RUN	CHECK #	INVOICE NET	DUE DATE	TYPE	STS	INVOICE DESCRIPTION
105998 MILBANK WINWATER WORKS									
175678 05	220038	03/11/2022	040522	341859	11,018.86	04/10/2022	INV	PD	INVENTORY-1" & 5/8" METER
CHECK DATE: 04/05/2022									
101217 MINNESOTA CHILD SUPPORT PMT CTR									
PR032522001510208001		03/25/2022	032922	341776	184.58	03/25/2022	INV	PD	032522 Payroll Child Supp
CHECK DATE: 03/29/2022									
101229 MINNESOTA DEPT OF EMPLOYMENT									
26	220005	04/01/2022	040522	341860	2,433.64	04/15/2022	INV	PD	FORMACOAT LLC LOAN REPAYM
CHECK DATE: 04/05/2022									
101337 MINNESOTA DEPARTMENT OF HEALTH									
1100002 1st Qtr 2022		02/28/2022	040522	341861	17,872.65	04/30/2022	INV	PD	Community Water Supply Sv
CHECK DATE: 04/05/2022									
101258 MINNESOTA POLLUTION CONTROL AGENCY									
10000135219		03/22/2022	040522	341862	225.00	04/20/2022	INV	PD	VIC REIMBURSEMENTS-HWY 41
CHECK DATE: 04/05/2022									
101276 MINNESOTA VALLEY ELECTRIC COOPERATIVE									
107051510/MAR22		03/21/2022	040522	341863	33.70	04/16/2022	INV	PD	MAR 82ND ST & HWY 41 SIGN
CHECK DATE: 04/05/2022									
778320601/MAR22		03/21/2022	040522	341863	93.07	04/16/2022	INV	PD	MAR CHEVALLE LIFT STATION
CHECK DATE: 04/05/2022									
780272000/MAR22		03/21/2022	040522	341863	-8.75	04/16/2022	CRM	PD	MAR CHEVALLE IRRIGATION B
CHECK DATE: 04/05/2022									
					118.02				
101307 MOBILE MINI INC									
9013352795		03/15/2022	040522	341864	360.00	04/14/2022	INV	PD	CLOVER RIDGE ICE RINK (EN
CHECK DATE: 04/05/2022									
101324 MOTOROLA									
8281301801		12/27/2021	040522	341865	1,149.00	01/26/2022	INV	PD	NEW RADIOS FOR FD (2)
CHECK DATE: 04/05/2022									

INVOICE	P.O.	INV DATE	CHECK RUN	CHECK #	INVOICE NET	DUE DATE	TYPE	STS	INVOICE DESCRIPTION
8281315511 CHECK DATE: 04/05/2022		01/21/2022	040522	341865	8,920.00	02/20/2022	INV	PD	NEW RADIOS FOR FD (2)
					10,069.00				
103088 SID TOOL CO INC									
5250308001 CHECK DATE: 04/05/2022		03/03/2022	040522	341866	722.01	04/03/2022	INV	PD	SHOP SUPPLIES
101354 MTI DISTRIBUTING INC #700767									
1333865-00 CHECK DATE: 04/05/2022		03/15/2022	040522	341867	141.93	04/15/2022	INV	PD	BEARINGS
1333865-01 CHECK DATE: 04/05/2022		03/15/2022	040522	341867	788.86	04/15/2022	INV	PD	BEARINGS
1337614-00 CHECK DATE: 04/05/2022		03/17/2022	040522	341867	210.81	04/17/2022	INV	PD	SPRAYER PARTS
1337832-00 CHECK DATE: 04/05/2022		03/21/2022	040522	341867	208.40	04/21/2022	INV	PD	SMALL SPRAYER PARTS
1338037-00 CHECK DATE: 04/05/2022		03/22/2022	040522	341867	649.00	04/22/2022	INV	PD	IRRIGATION TRAINING
					1,999.00				
101357 MUELLER SYSTEMS LLC									
65449953 CHECK DATE: 04/05/2022	220039	03/29/2022	040522	341868	4,947.04	04/13/2022	INV	PD	(50) SMARTMETERS CL200 2S
101759 MY ALARM CENTER LLC									
16427393 CHECK DATE: 04/05/2022		04/01/2022	040522	341869	107.85	05/01/2022	INV	PD	CITY HALL MONITORING 4/1/
101253 BUSINESS PLANNING CONCEPTS INC									
383600042022 CHECK DATE: 04/05/2022		03/05/2022	040522	341870	192.00	04/10/2022	INV	PD	APR PERA LIFE PREMIUMS
110443 NECON ENTERPRISES LLC									
36220 CHECK DATE: 04/05/2022		03/21/2022	040522	341871	74.43	04/21/2022	INV	PD	CREDIT BALANCE REFUND-845
102654 NORTH AMERICAN SAFETY INC									

INVOICE	P.O.	INV DATE	CHECK RUN	CHECK #	INVOICE NET	DUE DATE	TYPE	STS	INVOICE DESCRIPTION
INV63149 CHECK DATE: 04/05/2022		03/01/2022	040522	341872	185.03	04/01/2022	INV	PD	L. WECKMAN CITY ISSUED CL
INV63393 CHECK DATE: 04/05/2022		03/11/2022	040522	341872	83.88	04/11/2022	INV	PD	JETTING GLOVES
INV63778 CHECK DATE: 04/05/2022		03/24/2022	040522	341872	231.76	04/24/2022	INV	PD	SUMMER GLOVES
					500.67				
101445 OFFICE DEPOT									
226547841001 CHECK DATE: 04/05/2022		03/08/2022	040522	341874	22.99	04/08/2022	INV	PD	Stamp
228520712001 CHECK DATE: 04/05/2022		03/09/2022	040522	341874	244.94	04/08/2022	INV	PD	Paper and Office Supplies
232012903001-1 CHECK DATE: 04/05/2022		03/08/2022	040522	341873	39.39	04/09/2022	INV	PD	Bond Business Paper for t
232012903001-2 CHECK DATE: 04/05/2022		03/08/2022	040522	341873	1.61	04/09/2022	INV	PD	Yellow Note pads for work
232020182001 CHECK DATE: 04/05/2022		03/08/2022	040522	341873	10.09	04/09/2022	INV	PD	Green RSVP Pens for the w
232797971001 CHECK DATE: 04/05/2022		03/17/2022	040522	341874	21.51	04/22/2022	INV	PD	Folders
232957152001 CHECK DATE: 04/05/2022		03/10/2022	040522	341873	50.37	04/09/2022	INV	PD	Desk Organizer, Stackable
232964160001 CHECK DATE: 04/05/2022		03/09/2022	040522	341873	14.99	04/09/2022	INV	PD	4 drw organizer for Liz H
					405.89				
101530 PING INC									
16193719 CHECK DATE: 04/05/2022		03/11/2022	040522	341875	360.00	05/11/2022	INV	PD	RESALE
16201510 CHECK DATE: 04/05/2022		03/16/2022	040522	341875	-360.00	04/16/2022	CRM	PD	CREDIT RESALE INV 1619371
16203987 CHECK DATE: 04/05/2022		03/17/2022	040522	341875	181.94	05/16/2022	INV	PD	RESALE
16221924 CHECK DATE: 04/05/2022		03/25/2022	040522	341875	394.15	05/24/2022	INV	PD	RESALE
16224271		03/28/2022	040522	341875	183.99	05/27/2022	INV	PD	RESALE

INVOICE	P.O.	INV DATE	CHECK RUN	CHECK #	INVOICE NET	DUE DATE	TYPE	STS	INVOICE DESCRIPTION
CHECK DATE: 04/05/2022									
					760.08				
101536 PITNEY BOWES GLOBAL FINANCIAL SERVICES LLC									
3105427957		03/26/2022	040522	341876	499.14	04/29/2022	INV	PD	Lease for Postage Machine
CHECK DATE: 04/05/2022									
106085 N&M ENTERPRISES INC									
INV491691		03/24/2022	040522	341877	1,954.05	04/23/2022	INV	PD	GARBAGE BAGS FOR PARK DEP
CHECK DATE: 04/05/2022									
101551 POPPITZ CONSTRUCTION INC									
1351		03/28/2022	040522	341878	42,576.00	04/27/2022	INV	PD	CLEAN OUT OF BASINS AT OU
CHECK DATE: 04/05/2022									
101563 PRAIRIE FIRE THEATRE									
99099		03/29/2022	040522	341879	1,980.00	04/29/2022	INV	PD	Mar Theater Camp-Peter Pa
CHECK DATE: 04/05/2022									
107632 PULTE GROUP - 1009									
35718		03/21/2022	040522	341880	237.23	04/21/2022	INV	PD	CREDIT BALANCE REFUND-167
CHECK DATE: 04/05/2022									
103055 QUALITY PROPANE INC									
231928		03/14/2022	040522	341881	83.43	04/13/2022	INV	PD	Zamboni LP Gas
CHECK DATE: 04/05/2022									
107855 STAPLES INC									
23549476		03/04/2022	040522	341883	77.94	04/03/2022	INV	PD	OFFICE SUPPLIES
CHECK DATE: 04/05/2022									
23599930		03/08/2022	040522	341883	23.82	04/07/2022	INV	PD	OFFICE SUPPLIES
CHECK DATE: 04/05/2022									
23656905		03/09/2022	040522	341883	259.96	04/08/2022	INV	PD	SHOP PRINTER INK
CHECK DATE: 04/05/2022									
23793952		03/15/2022	040522	341882	59.98	04/14/2022	INV	PD	Dixie heavy bowls for the
CHECK DATE: 04/05/2022									
23794306		03/15/2022	040522	341882	17.98	04/14/2022	INV	PD	Phone log for Liz Hanson

INVOICE	P.O.	INV DATE	CHECK RUN	CHECK #	INVOICE NET	DUE DATE	TYPE	STS	INVOICE DESCRIPTION
CHECK DATE: 04/05/2022									
23795602		03/15/2022	040522	341883	184.98	04/15/2022	INV	PD	BATTERY BACKUPS
CHECK DATE: 04/05/2022									
					624.66				
101684 R & R SPECIALTIES OF WISCONSIN INC									
0075422-IN		03/17/2022	040522	341884	65.00	04/17/2022	INV	PD	Zamboni Blade Sharpening
CHECK DATE: 04/05/2022									
0075437-IN		03/18/2022	040522	341884	514.05	04/18/2022	INV	PD	Zamboni Repair Parts
CHECK DATE: 04/05/2022									
					579.05				
101616 RDO EQUIPMENT COMPANY									
P1000001		03/17/2022	040522	341885	266.04	04/17/2022	INV	PD	OAK STREET PUMP UNIT P1
CHECK DATE: 04/05/2022									
101617 REACH FOR RESOURCES INC									
6846183		01/31/2022	040522	341886	3,358.98	04/08/2022	INV	PD	2022 Inclusion Services C
CHECK DATE: 04/05/2022									
107494 ROBERT THOMAS HOMES									
10005397-1		03/21/2022	040522	341887	73.51	04/21/2022	INV	PD	CREDIT BALANCE REFUND-503
CHECK DATE: 04/05/2022									
110439 SAYLER, SANDRA									
35383		03/21/2022	040522	341888	169.53	04/21/2022	INV	PD	CREDIT BALANCE REFUND-110
CHECK DATE: 04/05/2022									
101738 SCHILLING SUPPLY COMPANY									
865338-00		03/21/2022	040522	341889	2,225.43	04/21/2022	INV	PD	Cleaning Supplies-CCC
CHECK DATE: 04/05/2022									
866258-00		03/23/2022	040522	341889	272.64	04/23/2022	INV	PD	Cleaning Supplies
CHECK DATE: 04/05/2022									
					2,498.07				
101730 SCHWEITZER ENGINEERING LABORATORIES INC									
INV-000683911	220014	03/10/2022	040522	341890	12,823.20	04/10/2022	INV	PD	BLUFF CREEK SUB RELAY CHA
CHECK DATE: 04/05/2022									

INVOICE	P.O.	INV DATE	CHECK RUN	CHECK #	INVOICE NET	DUE DATE	TYPE	STS	INVOICE DESCRIPTION
INV-000683912	220015	03/10/2022	040522	341890	12,823.20	04/10/2022	INV	PD	MN RIVER SUB RELAY CHANGE
CHECK DATE: 04/05/2022									
					25,646.40				
104416 KELBRO COMPANY									
2738953		03/15/2022	040522	341891	260.35	04/14/2022	INV	PD	OAK 19 ICE MACHINE RENTAL
CHECK DATE: 04/05/2022									
101775 THE SHERWIN-WILLIAMS COMPANY-CHANHASSEN									
5023-5		03/23/2022	040522	341892	5,602.50	04/20/2022	INV	PD	CROSSWALK & PARKING STALL
CHECK DATE: 04/05/2022									
104827 ROHN INDUSTRIES									
571354		03/21/2022	040522	341893	20.25	04/21/2022	INV	PD	Security Consoles
CHECK DATE: 04/05/2022									
104547 SITEONE LANDSCAPE SUPPLY HOLDING LLC									
116863291-001		03/11/2022	040522	341894	1,474.80	04/15/2022	INV	PD	IRRIGATION SUPPLIES FOR C
CHECK DATE: 04/05/2022									
116974397-001		03/16/2022	040522	341894	4,710.00	04/15/2022	INV	PD	HERBICIDE-INSECTICIDE FOR
CHECK DATE: 04/05/2022									
116977185-001		03/16/2022	040522	341894	53.36	04/15/2022	INV	PD	FOAM MARKER FOR APPLYING
CHECK DATE: 04/05/2022									
117169761-001		03/22/2022	040522	341894	140.92	04/15/2022	INV	PD	IRRIGATION SUPPLIES FOR P
CHECK DATE: 04/05/2022									
					6,379.08				
101914 SOUTHWEST METRO CHAMBER OF COMMERCE									
323475		11/17/2021	040522	341895	80.00	12/02/2021	INV	PD	2021 Mayors Luncheon-Nate
CHECK DATE: 04/05/2022									
101861 STATE SUPPLY COMPANY									
621045		03/16/2022	040522	341896	215.12	04/16/2022	INV	PD	Parts to rebuild Bearing
CHECK DATE: 04/05/2022									
110200 STERICYCLE INC									
400046926		03/09/2022	040522	341897	-105.78	03/09/2022	CRM	PD	Shredding - Credit for do

INVOICE	P.O.	INV DATE	CHECK RUN	CHECK #	INVOICE NET	DUE DATE	TYPE	STS	INVOICE DESCRIPTION
CHECK DATE: 04/05/2022									
8001169566		03/18/2022	040522	341897	107.60	04/17/2022	INV	PD	Shredding
CHECK DATE: 04/05/2022									
					1.82				
101888 STREICHERS									
I1556276		03/10/2022	040522	341898	212.94	04/10/2022	INV	PD	Kane-Zafke-Initial Issue-
CHECK DATE: 04/05/2022									
I1558016		03/21/2022	040522	341898	65.98	04/21/2022	INV	PD	Kane-Zafke-Initial Issue-
CHECK DATE: 04/05/2022									
I1558032		03/21/2022	040522	341898	275.00	04/21/2022	INV	PD	Department Patches
CHECK DATE: 04/05/2022									
I1558332		03/22/2022	040522	341898	154.99	04/22/2022	INV	PD	PIO Wright-Initial Issue-
CHECK DATE: 04/05/2022									
					708.91				
101723 SCHINDLER ELEVATOR CORPORATION									
8105913498		04/01/2022	040522	341899	438.27	04/30/2022	INV	PD	2ND QTR ELEVATOR MAINT CO
CHECK DATE: 04/05/2022									
103677 SUN LIFE ASSURANCE COMPANY OF CANADA									
237741/APR22		04/01/2022	040522	341900	4,810.87	04/30/2022	INV	PD	APR EMP LIFE INS PREM
CHECK DATE: 04/05/2022									
106000 TARMAN, AL									
98938		03/13/2022	040522	341901	150.65	04/18/2022	INV	PD	MILEAGE-LEADERSHIP CLASS
CHECK DATE: 04/05/2022									
101932 TAYLOR MADE GOLF CO INC									
35426365		12/08/2021	040522	341902	-2,164.10	03/31/2022	CRM	PD	CREDIT-RETURNED CLUBS
CHECK DATE: 04/05/2022									
35677353		03/17/2022	040522	341902	196.91	04/16/2022	INV	PD	RESALE
CHECK DATE: 04/05/2022									
35680951		03/17/2022	040522	341902	531.56	05/16/2022	INV	PD	RESALE
CHECK DATE: 04/05/2022									
35689938		03/19/2022	040522	341902	3,806.19	05/18/2022	INV	PD	RESALE
CHECK DATE: 04/05/2022									

INVOICE	P.O.	INV DATE	CHECK RUN	CHECK #	INVOICE NET	DUE DATE	TYPE	STS	INVOICE DESCRIPTION
35701062		03/22/2022	040522	341902	873.07	04/21/2022	INV	PD	RESALE
CHECK DATE: 04/05/2022									
35705890		03/23/2022	040522	341902	212.94	05/22/2022	INV	PD	RESALE
CHECK DATE: 04/05/2022									
35727742		03/27/2022	040522	341902	235.17	10/01/2022	INV	PD	DEMO/RENTALS
CHECK DATE: 04/05/2022									
					3,691.74				
100757 THE GRAPHIC EDGE LLC									
1569041		01/31/2022	040522	341903	867.80	03/02/2022	INV	PD	Staff t-shirts + INTEREST
CHECK DATE: 04/05/2022									
1572241		02/07/2022	040522	341903	28.60	03/09/2022	INV	PD	Staff t-shirt + INTEREST
CHECK DATE: 04/05/2022									
					896.40				
109940 THE HUNTINGTON NATIONAL BANK									
7596804		03/12/2022	033122	341781	313.42	04/03/2022	INV	PD	FD EQUIP LEASE PYMT 34
CHECK DATE: 03/31/2022									
101964 PMT EMBROIDERY LLC									
19142		03/13/2022	040522	341904	28.00	04/13/2022	INV	PD	Brumm-Initial Issue-Embro
CHECK DATE: 04/05/2022									
19164		03/22/2022	040522	341904	363.00	04/22/2022	INV	PD	BLDG INSPECTIONS JACKETS
CHECK DATE: 04/05/2022									
					391.00				
104908 TIMESAVER OFF SITE SECRETARIAL INC									
M27082		03/14/2022	040522	341905	754.00	04/14/2022	INV	PD	HRC 2/24, COUNCIL 2/28 AN
CHECK DATE: 04/05/2022									
101994 TRAVISMATHEW LLC									
90676053		03/21/2022	040522	341906	2,245.44	04/20/2022	INV	PD	RESALE
CHECK DATE: 04/05/2022									
102028 TWIN CITY WATER CLINIC INC									
17278		03/23/2022	040522	341907	100.00	04/22/2022	INV	PD	WTP FILTER #3
CHECK DATE: 04/05/2022									

INVOICE	P.O.	INV DATE	CHECK RUN	CHECK #	INVOICE NET	DUE DATE	TYPE	STS	INVOICE DESCRIPTION
110053 TX CHILD SUPPORT SDU									
PR0325220012725283 CHECK DATE: 03/29/2022		03/25/2022	032922	341777	147.69	03/25/2022	INV	PD	032522 Payroll Child Supp
102037 ULINE INC									
146188237 CHECK DATE: 04/05/2022		03/10/2022	040522	341908	138.00	04/10/2022	INV	PD	Reclosable Bags for Build
102038 ULTIMATE SAFETY CONCEPTS INC									
199028 CHECK DATE: 04/05/2022		03/24/2022	040522	341909	2,533.63	04/24/2022	INV	PD	THERMAL CAMERA KITS FOR C
102052 UNIQUE PAVING MATERIALS CORP									
65370 CHECK DATE: 04/05/2022		03/14/2022	040522	341910	229.50	04/14/2022	INV	PD	COLD MIX PATCHING
101555 UNITED STATES POSTAL SERVICE									
99047 CHECK DATE: 04/05/2022		03/20/2022	040522	341911	265.00	05/14/2022	INV	PD	2022 MARKETING MAIL PERMI
107745 US BANK NATIONAL ASSOCIATION									
468108980 CHECK DATE: 04/05/2022		03/21/2022	040522	341912	439.53	04/15/2022	INV	PD	CCC COLOR COPIER LEASE PM
102102 VERIZON WIRELESS									
9902519960 CHECK DATE: 03/31/2022		03/23/2022	033122	341782	564.09	04/15/2022	INV	PD	MAR CRADLEPOINTS
110444 NEW VISION TECHNOLOGIES LLC									
24141 CHECK DATE: 04/05/2022		03/16/2022	040522	341913	450.18	04/16/2022	INV	PD	RESALE
102133 WAGNER PRESS & GRAPHICS									
35113 CHECK DATE: 04/05/2022		03/11/2022	040522	341914	160.00	03/26/2022	INV	PD	Business cards-CCC, Park
102146 WATER SPECIALTY OF MINNESOTA INC									

INVOICE	P.O.	INV DATE	CHECK RUN	CHECK #	INVOICE NET	DUE DATE	TYPE	STS	INVOICE DESCRIPTION
12627		03/28/2022	040522	341915	2,592.55	04/28/2022	INV	PD	Pool Chemicals
CHECK DATE: 04/05/2022									
102157 MICHAEL P WELLENS									
7084		03/13/2022	040522	341916	1,300.00	04/13/2022	INV	PD	OUTLET E EROSION CONTROL
CHECK DATE: 04/05/2022									
102174 WHEELER HARDWARE COMPANY									
SPI128174		03/15/2022	040522	341917	710.98	04/14/2022	INV	PD	DEADBOLT REPLACEMENT FOR
CHECK DATE: 04/05/2022									
SPI128175		03/15/2022	040522	341917	450.76	04/14/2022	INV	PD	RE-KEY VETS PARK SHELTER/
CHECK DATE: 04/05/2022									
					1,161.74				
102178 WICKENHAUSER, GREG									
98880		02/25/2022	040522	341918	144.14	04/15/2022	INV	PD	MILEAGE-2022 METER SCHOOL
CHECK DATE: 04/05/2022									
102192 WILSON SPORTING GOODS CO									
4537431784		03/24/2022	040522	341919	141.87	06/22/2022	INV	PD	RESALE
CHECK DATE: 04/05/2022									
					141.87				
256 INVOICES					1,049,365.65				

** END OF REPORT - Generated by Michelle Robbin **

Electronic Payments

INVOICE	P.O.	INV DATE	CHECK RUN	CHECK #	INVOICE NET	DUE DATE	TYPE	STS	INVOICE DESCRIPTION
105243 ALERUS FINANCIAL									
C120958 CHECK DATE: 03/21/2022		03/04/2022	032122	3182	105.70	03/21/2022	DIR	PD	FEB 2022 PARTICIPANT FEES
100385 CHASKA FIRE DEPT RELIEF ASSN									
2022 SUPP CHECK DATE: 03/18/2022		03/17/2022	031822	3180	1,000.00	03/18/2022	DIR	PD	REMIT SUPPLEMENTAL BENEFI
2022/2-CFDRA CHECK DATE: 03/25/2022		03/25/2022	032522	3186	13,237.45	03/25/2022	DIR	PD	FEB-22 FIRE RELIEF ASSOC-
					14,237.45				
107490 GREAT-WEST LIFE & ANNUITY INSURANCE COMPANY									
99036 CHECK DATE: 03/29/2022		03/25/2022	032922	3197	3,006.45	03/29/2022	DIR	PD	032522 Payroll - HCSP Con
107744 GREAT-WEST LIFE & ANNUITY INSURANCE COMPANY									
99037 CHECK DATE: 03/28/2022		03/25/2022	032822	3195	450.00	03/28/2022	DIR	PD	032522 Payroll - MNDCP Co
110382 ENTERPRISE FM TRUST									
FBN4422087 CHECK DATE: 03/18/2022		03/03/2022	031822	3179	728.94	03/18/2022	DIR	PD	SQUAD 1221 LEASE-MAR #3
101756 MII LIFE INCORPORATED									
16022498 CHECK DATE: 03/23/2022		03/09/2022	032322	3183	279.00	03/23/2022	DIR	PD	MAR PARTICIPANT FEES-FSA
3/15/2022 CHECK DATE: 03/21/2022		03/15/2022	032122	3181	416.00	03/21/2022	DIR	PD	3/15/2022 VEBA CITY CONTR
40156658 CHECK DATE: 03/17/2022		03/15/2022	031722	3174	6,014.13	03/17/2022	DIR	PD	3/17/22 FSA REIMB-HEALTHC
40165619 CHECK DATE: 03/24/2022		03/22/2022	032422	3185	545.53	03/24/2022	DIR	PD	3/24/22 FSA REIMB-HEALTHC
					7,254.66				
100927 INTERNAL REVENUE SERVICE									
99030 CHECK DATE: 03/25/2022		03/25/2022	032522	3189	133,804.15	03/25/2022	DIR	PD	032522 Payroll - SS, Medi

INVOICE	P.O.	INV DATE	CHECK RUN	CHECK #	INVOICE NET	DUE DATE	TYPE	STS	INVOICE DESCRIPTION
101346 MINNESOTA COMMISSIONER OF REVENUE									
2022/0228-CC CHECK DATE: 03/18/2022		02/28/2022	031822	3178	10,218.23	03/18/2022	DIR	PD	FEB-22 CARVER CTY TRANSIT
2022/0228-SLS/UB CHECK DATE: 03/18/2022		02/28/2022	031822	3176	141,112.88	03/18/2022	DIR	PD	FEB-22 GEN/UB SALES TAX
2022/0228-USE CHECK DATE: 03/18/2022		02/28/2022	031822	3177	1,045.52	03/18/2022	DIR	PD	FEB-22 USE TAX
					152,376.63				
101343 MINNESOTA DEPT OF REVENUE-PAYROLL WIRES									
99031 CHECK DATE: 03/28/2022		03/25/2022	032822	3194	26,411.14	03/28/2022	DIR	PD	032522 Payroll - MN State
101249 MINNESOTA MUNICIPAL POWER AGENCY									
3626 CHECK DATE: 03/18/2022		03/03/2022	031822	3175	2,587,384.27	03/18/2022	DIR	PD	FEB 2022 ELECTRIC SERVICE
101376 NATIONWIDE RETIREMENT SOLUTIONS(USCM)									
99032 CHECK DATE: 03/25/2022		03/25/2022	032522	3190	13,796.39	03/25/2022	DIR	PD	032522 Payroll - 457 Cont
106955 NATIONWIDE RETIREMENT SOLUTIONS(USCM)									
99035 CHECK DATE: 03/25/2022		03/25/2022	032522	3192	5,628.78	03/25/2022	DIR	PD	032522 Payroll - Roth Con
104668 OPTUM BANK INC									
99034 CHECK DATE: 03/25/2022		03/25/2022	032522	3193	16,591.04	03/25/2022	DIR	PD	032522 Payroll - HSA Cont
101498 PCARD									
2022/0314-PC CHECK DATE: 03/29/2022		03/14/2022	032922	3196	118,780.72	03/29/2022	DIR	PD	MAR 2022 PCARD PURCHASES
101506 PUBLIC EMPLOYEES RETIREMENT ASSOCIATION									
99033 CHECK DATE: 03/25/2022		03/25/2022	032522	3191	99,448.74	03/25/2022	DIR	PD	032522 Payroll - PERA Con

INVOICE	P.O.	INV DATE	CHECK RUN	CHECK #	INVOICE NET	DUE DATE	TYPE	STS	INVOICE DESCRIPTION
101973 CARVER COUNTY TITLE MANAGEMENT INC									
216 4TH ST W-CLOSING CHECK DATE: 03/25/2022		03/18/2022	032522	3188	227,834.00	03/25/2022	DIR	PD	216 4TH ST W CLOSING-LIBR
PARCEL 46 HWY 41-FEE CHECK DATE: 03/23/2022		03/22/2022	032322	3184	86.90	03/23/2022	DIR	PD	WESTERHOLM PROPERTIES REC
					227,920.90				
102066 US BANK									
2022/04/01 DS-1620 CHECK DATE: 03/29/2022		03/29/2022	032922	3199	100,987.50	03/29/2022	DIR	PD	US B-DS PMT DUE 4/1/22-IN
2022/04/01 DS-5979 CHECK DATE: 03/29/2022		03/29/2022	032922	3198	252,442.50	03/29/2022	DIR	PD	US B-DS PMT DUE 4/1/22-PR
					353,430.00				
100631 NORTHERN STATES POWER COMPANY, MN									
2022.03 CHECK DATE: 03/25/2022		03/23/2022	032522	3187	55,000.00	03/25/2022	DIR	PD	Xcel Facilities Study for
					55,000.00				
26 INVOICES					3,816,355.96				

** END OF REPORT - Generated by Michelle Robbin **

Biweekly Report
April 4, 2022
By
Elise Durbin

UPCOMING COUNCIL MEETING SCHEDULE

Below is a list of the upcoming Council Meetings and Work Sessions planned over the next month:

April 4th: Prior to the Council Meeting, there will be a Work Session from 6:00-7:00 p.m. The purpose of this Work Session will be to go over updates on the Highway 41 project through downtown from the project team. At the Council Meeting the agenda is expected to be fairly light; however, staff will be sharing options for new water tower logos and lettering. Staff is also anticipating a short EDA meeting following the Council Meeting.

April 18th: April 18 is a regularly scheduled Council Meeting. Also that evening, there is a tentatively scheduled Work Session from 5:30-7:00 p.m. At the Work Session, Leo A Daly architects will share the concepts addressing the space needs for the General Fund facilities (Police/Fire, MSB, and City Hall). Additionally, some initial cost estimates with these concept plans will be provided.

BUILDING OPEN HOUSES

As part of the process for developing the plans for the General Fund facilities, the intention is to hold community open houses. The purpose of these open houses are to give residents the opportunity to see the facilities and to show the concept plans about how we intend to address the issues that exist at each. The dates of these open houses are to be determined, but will be shared with the council and the public as soon as they confirmed.

ELECTRIC DIRECTOR

The city's new Electric Director, Pete Wyfels, will begin on Tuesday, April 5. Pete comes to the city from Glencoe Power and Light, and also previously spent time at Marshall Utility, Meeker County Coop, and MMUA. Once he gets started, a time will be scheduled for Pete to attend a City Council Meeting so that he can be formally introduced.

COMMUNITY CENTER MASTER PLAN CITIZEN TASK FORCE

The first Community Center Master Plan Citizen Task Force meeting will be held on Thursday, April 14.

UPCOMING EVENTS

Below are some of the upcoming city and community sponsored events happening throughout the next few months.

Water Main Flushing
Water main flushing will begin the week of April 18. The entire process is expected to take between three and four weeks. More detailed information will be posted on the city's website and shared shortly.

Christmas In May
This year's Christmas In May event will take place on Saturday, May 7 beginning at 7:00 a.m. The homes to be assisted during this year's event have been selected, so all that is needed now are volunteers! If you, friends or family, or other groups you know of are interested in volunteering, please go to the Christmas in May website to sign up.

Taste Of Chaska
The Taste of Chaska, put on by the SouthWest Metro Chamber of Commerce, is back again on Tuesday, May 11 from 5:00-9:00 p.m. in City Square Park. The event is open to the public and will feature businesses throughout the community and also include live music.

Jonathan Clean Up
The annual Jonathan Association Spring Clean Up day is Saturday, May 7. Yard waste, leaves, garden waste and small brush can be left at the curb by 8 a.m. for pick up. More information about acceptable items and can be found on their website.