AGENDA
CHASKA CITY COUNCIL
CHASKA CITY HALL - COUNCIL CHAMBERS & ZOOM
Monday, February 27, 2023
7:00 PM

1. Call to Order
2. Pledge of Allegiance
3. Roll Call
4. Adopt Agenda
5. Visitor Presentation
6. Approve Previous Meeting Minutes
   - 6.A. City Council Meeting Minutes 2-6-2023
7. Consent Items
   - 7.A. Adopt Resolution No. 2023-9 Approving the Final Plat for Club West 11th/Tradition Development/PC #2023-02
   - 7.B. Adopt Resolution No. 2023-14 Ratifying 2023 Cogeneration and Small Power Production Tariff for the City's Electric Utility
   - 7.C. Appointment of Heritage Preservation Commission Chair and Vice Chair
   - 7.D. Appointment of Planning Commission Chair and Vice-Chair
   - 7.E. Audit Engagement Letter for 2022 Audit
   - 7.F. Adopt Ordinance No.1031 Approving the Zoning Ordinance Amendment to Section 15.24 Shoreland Management/City of Chaska/PC #2023-07
   - 7.G. Adopt Resolution No 2023-15 and 2023-16 Amending 2022 and 2023 Fund Budgets
     - 7.G.i. Res 2023-15
     - 7.G.ii. Res 2023-16
   - 7.H. Downtown Chaska TH 41/CSAH 61 - Underpass and Recreational Trail Permit Agreement

7.I. Adopt Resolution No. 2023-18 Supporting a Request for State Bonding for County Highway 18 (West 82nd Street)

7.J. Adopt Resolution No. 2023-19 Approving Premises Gambling Permit for Chaska Lions Club at Patron's Mexican Restaurant

7.K. Adopt Resolution No. 2023-22 Approve the State of Minnesota Joint Powers Agreement on behalf of the City Attorney and Police Department

8. Action Items

8.A. Public Hearing to Consider Certification of Spring 2023 Delinquent Utilities

8.A.i. Approve Resolution 2023-17 Spring 2023 Deliquent Utilities

8.B. Approval to Move Forward With Phase II of Professional Services Agreement for Facility Naming Rights and Sponsorship

9. Bills

9.A. ACCOUNTS PAYABLE CLAIMS ROSTER 2-27-2023

10. Other Business

10.A. City Administrator's Report

10.A.i. Biweekly 2/27/2023

11. Adjourn

DRAFT

- MINUTES -
CHASKA CITY COUNCIL
FEBRUARY 6, 2023

1. Call to Order
The meeting was called to order by Mayor Windschitl at 7 p.m.

2.Pledge of Allegiance

2.A. Lead by Chaska Cub Scout Pack #301

3. Roll Call
Roll call was taken. Present: Mayor Windschitl and Councilmembers Grau, Hatfield, and Hubbard.

Absent: Councilmember Huang

Also Present: Matt Podhradsky, City Administrator; Noel Graczyk, Administrative Services Director; Kevin Wright, Communication Director; Elise Durbin, Assistant Administrator; Marshall Grange, Parks and Recreation Director; Nate Kabat, Community Development Director; Liz Hanson, City Planner; Jake Saufley, City Attorney; Matt Haefner, Water and Sewer Director; and Matt Clark, City Engineer.

4. Adopt the Agenda
Motion by Councilmember Hubbard, second by Councilmember Hatfield to adopt the agenda as presented.
Motion carried.

5. Visitor Presentation
Members of Cub Scout Pack #301 introduced themselves to the Council.

Abigail O'Reilly, 112241 Hutchins Court, noted her concerns about the environment. She shared statistics on car emissions and encouraged the Council address environmental concerns. She added she and others share concerns about pedestrian safety in Chaska.

Mayor Windschitl agreed the state of the environment is concerning. He listed some initiatives he and the Council are working on to address the issue such as windmills, solar garden, and vehicle charging stations. City Administrator Matt Podhradsky explained 40 percent of energy in Chaska is coming from renewable energy and provided details on ways Chaska residents can contribute to sustainable practices.

Councilmember Hubbard noted Ms. O'Reilly was very brave to address her concerns to the Council and encouraged her to continue her work. She noted there is upcoming funding for Safe Routes to School.

DRAFT

Councilmember Grau stated the Cub Scouts are a group of aspiring leaders and he thanked them for their time.

6. Approve Previous Meeting Minutes
6.A. Approve the January 23, 2023 City Council Meeting Minutes
Motion by Councilmember Grau, second by Councilmember Hatfield to approve the minutes of the January 23, 2023 City Council meeting.
Motion carried.

7. Consent Agenda
Councilmember Hubbard asked, in relation to Consent Agenda Item A. Ordinance 2023-1029 Amending Chapter 10, Article 20, Section 40 of the Chaska City Code, if there is a concern with the proximity to downtown. City Administrator Matt Podhradsky stated if there were issues, the City has good relationships with the neighborhood and can address concerns.

Kevin Steiner, Vice President of the Association, explained it is a community for those aged 55 and above. The goal is for residents to have better access to the Clubhouse and events.

Councilmember Grau asked if it would make sense for the reasoning to be included in the amendment. He noted concerns about a slippery slope. Mr. Podhradsky stated he would recommend against the idea because not all retirement living areas should be able to have golf carts. However, Staff will put together an alternative amendment option for the Council to review.

Motion by Councilmember Hubbard, second by Councilmember Hatfield to approve the Consent Agenda Items A through D, as amended to include the directive to Staff to include reasoning for the amendment for Item A:

A. Ordinance 2023-1029 Amending Chapter 10, Article 20, Section 40 of the Chaska City Code

Motion to adopt Ordinance 2023-1029 amending Chapter 10, Article 20, Section 40 of the Chaska City Code related to Motorized Golf Carts.

B. Approve Cooperative Construction Agreement and Retaining Wall Maintenance Agreement - Oak Ridge Development - TH 41 Roundabout

Authorize the Mayor and City Administrator execute the Assignment of Cooperative Construction Agreement and Retaining Wall Maintenance Agreement for the Oak Ridge Development - TH 41 Roundabout and Highway Improvements Project.

C. Adopt Resolution 2023-11 - Accepting Gifts and Donations

Motion to adopt Resolution 2023-11 acknowledging and accepting gifts to the City of Chaska received during the period October 1, 2022 through December 31, 2022.

D. Approve Parks and Recreation Chair and Vice Chair

Motion to appoint David Downs as Parks and Recreation Commission Chairperson and to appoint Jason Branch as Parks and Recreation Commission Vice-Chairperson.
Motion carried.

8. Action Items

DRAFT

8.A. Commission Appointments: Planning, Park & Recreation, Human Rights & Heritage Preservation
Mayor Windschitl thanked community members for applying to Commissions. He explained all spots have been filled except for a student position on the Parks & Recreation Commission. He read through the Commission appointments.

Motion by Councilmember Hubbard, second by Councilmember Grau to appoint commission members with associated term of office as presented.

Councilmember Grau thanked the community for the numerous applications and encouraged continued applications.

Motion carried.

9. Bills
9.A. Accounts Payable Claims Roster 6-2-2023
The Council requested further information about bills (CDW Government, Eureka Construction, Trace Inc., Town & Country Glass).

City Administrator Podhradsky provided further information regarding those bills.

Motion by Councilmember Grau, second by Councilmember Hatfield to approve the bills as presented. Roll call was taken. Voting aye: Councilmembers Hatfield, Hubbard, Grau and Mayor Windschitl. Voting nay: None
Motion carried.

10. Other Business
10.A. City Administrator's Report
10.A.i. Bi-Weekly Report Day-Month-2023

Councilmember Grau:
- Wished his son Noah a Happy Birthday.

Councilmember Hatfield:
- Noted the Ice Garden starts the upcoming weekend at Fireman's Park.

Councilmember Hubbard:
- Stated the Little Tots Sweethear Dance is February 17 at 6:30 p.m.
- Pointed out the ice fishing event was really well attended although the ice conditions were not appropriate for ice fishing.
- Attended the Community of Belongings session, which is a three-part conversation.

Assistant City Administrator Elise Durbin:
- Noted the sheetpiling on the Highway 41 project will go through next Wednesday. The sidewalks will be opened temporarily after the sheetpiling is complete.

DRAFT

City Administrator Podhradsky:

- Stated Councilmember Huang presented at a legislative breakfast to champion funding for Southwest Transit.
- Provided an update on renewable energy sources and noted points for future discussion.

Mayor Windschitl:

- Noted some previously planted trees are being removed because they aren't doing well.
- Added the next meeting is February 27, 2023, and he will be out of town.
- Stated there will be employee recognition in March.

10.B. Approve HRC Meeting Minutes 10-27-2022, 11-17-2022 and 12-29-2022

10.C. 4th-Qtr 2022 Investment Report dated February 6, 2023

10.D. Financial Reports as of 11/30/2022

10.E. Hawk Pride Recap

11. Adjourn

Motion by Councilmember Hatfield, second by Councilmember Hubbard to adjourn the meeting at 8:20 p.m.
Motion carried.

REQUEST FOR ACTION
CHASKA CITY COUNCIL
02/27/2023

Subject: **Kusske Estates Property (Club West 11th Addition) – Final Plat**

Applicant: Tradition Development

Location: East of Club West 3rd Addition, east end of Vista View Drive

Case No.: 2023-02

Synopsis: Applicant seeks to obtain approval of a final plat for an 18-lot single family residential development on 10.4 acres of land on a portion of the Kusske Estates property (35.19 acres) located west of Creek Road and east of the Club West 3rd Addition/Harvest neighborhood

Prepared By: Elizabeth Hanson

Staff Recommendation: Motion to adopt resolution

BACKGROUND

The Kusske Estates, Outlot A property, which is 35.19 acres, is located in the Southwest Chaska Growth and Development Plan area between Creek Road (east) and the developing Harvest neighborhood (west). Kusske Land Corporation is the property owner. Access to the property is from Creek Road and Vista View Drive (west). Site location map below shows the 35.19 acre Kusske Estates Outlot A property. The Kusske Estates Plat also includes two undeveloped lots southeast of Outlot A with access from Cascade Drive (mislabeled as Founders Way below).

This property's existing land use on the western portion is agricultural, although this land has not been farmed for a number of years. The eastern portion was previously used for sand and clay mining and is currently undergoing land reclamation activities. Stands of mature trees are present along the adjacent ravines on the north and south portions of the property.

Tonight, we will be reviewing a proposed final plat for a residential development for the western 10.4 acres of the property that will be an extension of the Harvest neighborhood and accessed from Vista View Drive. While the property proposed for development is currently owned by the Kusske Land Corporation, the applicant for the proposed concept plan is Tradition Development.

Since 2004, Club West Partners, LLC/Tradition Development has assembled approximately 300 acres in this area generally lying north of CR 44 and east of Highway 212. Tradition Development intends to develop the home sites exclusively for the Robert Thomas Homes builder, a partner within the family of Tradition Companies. Robert Thomas Homes has constructed high quality and architecturally significant homes on all of the lots developed by Tradition Development within the Harvest Development. Tradition Development believes this plan is consistent with the Southwest Chaska Growth and Development Plan in addition to the 2040 Comprehensive Plan.

The Concept Plan for Club West 11th was approved in May 2022. The preliminary plat and rezoning (PRD-62) were approved in July 2022. The preliminary plat was approved for 19 lots. Tonight we are looking at a final plat for 18 lots (one less lot). A Conditional Use Permit (CUP) was approved on January 23, 2023 for the existing mining operation.

PROJECT GOALS

The proposed development will provide the City of Chaska with a neighborhood whose goals are consistent with the City's Mission Statement and Core Strategies. The five development goals include: connecting to the greater community; preserving existing vegetation; utilizing site topography; creating public and community space; and providing quality architecture.

- Connecting to the greater community
- Preserve vegetation
- Utilize site topography
- Creating community space
- Quality Architecture and Home Designs

Connecting to the Greater Community

One overarching goal of the project is to connect with the greater community of Chaska. The potential residential development is close to downtown Chaska, ensuring that residents have convenient access to services they need. Pedestrian trails and sidewalks will ultimately connect to the existing 90+ mile network of community trails in the city. The future extension of Vista View Drive to Creek Road will allow residents of surrounding developments and neighborhoods to walk or bike to downtown Chaska for services and entertainment.

Preserve Vegetation

The majority of the property is open farmland/field. Woodland areas occur in the north and south portions of the property. These areas will remain as preserved open space or at the back of lots. Stormwater ponds and bio-retention basins will collect and filter water from upstream in

the development. Native or naturalized vegetation will be used in entry features and public common areas in order to reflect the character of the surrounding environment and provide food for wildlife in the area.

Utilize Site Topography
The proposed development will utilize existing topography to protect and preserve the wooded areas adjacent to the home sites. It is also intended that the project direct stormwater toward bio-retention basins and sedimentation ponds in consideration of historic drainage patterns for this area.

Creating Community Space
The project proposes creating a two acre park area that will border the existing natural ravines, and woodland and will be accessed with sidewalks. The park area is adjacent to dense tree stands and steep slopes creating recreational opportunities for the residents. The extended sidewalks provide access to an existing community park area in the middle of the neighborhood allowing equal access from homes to the common area. The maximum distance from a single family residence is less than a 1/4 mile, approximately a five minute walk. Common areas strengthen the neighborhood identity and promote interaction between residents.

Quality Architecture and Home Designs
Home designs will embrace and compliment the unique site design. Characteristics include reduced street setbacks, active and pleasant streetscape environments featuring sidewalks, boulevard trees and landscape, and the proximity to and views of parks, greens, and open space. While no specific architectural style is required, the design of each home is required to base upon specified architectural design influences and each home shall contain appropriate massing, roof lines, and architectural detailing consistent with its selected style on all four sides of the home. The goals for the home design is intended to ensure construction of a complimentary mix of varied housing styles, architectural treatments, quality materials, professionally installed landscaping and variety of color. This will be a direct extension of what has been built in the previous phases of The Harvest.

Comprehensive Plan
The Comprehensive Plan guides this area to be Low Density Residential and Open Space. The applicant's proposal is consistent with this guidance.

The 2040 Comprehensive Plan defines the guided land uses as follows:

Low Density Residential
Lots or parcels guided for predominantly single-family detached dwellings, but also allowing single-family attached dwellings and mid-rise multiple-family housing such as apartments and condominiums. Density range allowed is from two (2) to five (5) dwelling units per net acre including local access streets.

Open Space
Land guided for open space preservation, including environmental protection, historic preservation, homeowners' association recreation (e.g. Jonathan), public/semi-public use or other public purposes, and for which development is prohibited through ownership, ordinances or other legal means.

PROPOSED FINAL PLAT

The 10.4-acre site proposal consists of 18 single-family lots with a typical lot size of 75 feet wide by 125 feet deep. The Chaska 2040 comprehensive plan guides these properties as Low Density Residential and Open Space use. Current zoning is Planned Residential Development (PRD-62).

Adjacent Properties

The proposed development site is bordered to the west by low density residential development (Club West 3rd Addition/Harvest neighborhood), to the south by a single one-acre residential lot and open space, to the east by a mining reclamation site, and to the north by open space.

Existing Conditions

This existing land use on the proposed development site is agricultural, although this land has not been farmed for a number of years. Stands of mature trees are present along the adjacent ravines on the north, south, and east portions of the property. The 10.4 acre site's topography currently varies from a peak elevation of 900 feet MSL near the western boundary to the lower elevations on the east at approximately 850 MSL. The site's topography is generally sloping downward to the east, north and south of the site.

The site currently has a 10" sanitary sewer trunk line extended through the property from west to east along the future extension of Vista View Drive. This sanitary trunk line conveys the wastewater from the entire Harvest neighborhood. An 8" watermain has been extended to the western edge of the property along Vista View Drive.

The eastern portion of the 35.19 acre site was previously used for sand and clay mining. Currently, no materials are being extracted from the site and according to the owner there is no plan in the future for further mining. The property owner is hauling in reclamation material and is spreading and compacting the material on the eastern portion of the site, east of the proposed residential development area. The reclamation activities are infrequent occurring only as suitable materials become available. The property owner anticipates that these reclamation activities will occur for a period of up to five years. At the completion of the reclamation and relocation of the owner's business, the remaining portion of the parcel will be developed including a street connection (Vista View Drive) to Creek Road.

Land Use

The 10.4-acre site proposal consists of 18 single-family lots with a typical lot size of 75 feet wide by 125 feet deep. All of the homes are planned to have a minimum width of 75 feet to accommodate the Tradition Collection house plans by Robert Thomas Homes. The lot dimensions are similar in scale to lots found in the existing Harvest neighborhood to the west.

The land that this proposed development encompasses is currently zoned Planned Residential Development (PRD) zoning district – PRD-62.

Site Plan

The Site Plan shows this new residential development as an extension of the Harvest neighborhood to the west via an extension of Vista View Drive. The entrance to the neighborhood will be from Vista View Drive and will end in a stub street until the extension of

Vista View Drive to Creek Road in the future. The 18 single-family residential lots include 4 lots on the north side of Vista View Drive and 14 lots oriented to Vista View Court, a cul-de-sac street extending south from Vista View Drive. Most of the lots will have rear yards that back to wooded ravine areas.

Minimum yard setbacks are proposed to be:

- Front yard setback of 23 feet
- Side interior yard setback of 10 feet house/5 feet garage
- Side corner yard setback of 23 feet
- Rear yard setback of 30 feet

In addition to these yard setbacks, there are other setbacks that apply to this site:

- Wooded Steep Slopes - 50 feet building and parking setback and 30 feet "no grade/ mow" buffer area
- Wetland – 30 feet

The applicant has verified the wooded steep slope edges in the field and added a "wooded bluff line" delineation to the submitted plan exhibits. The applicable setbacks have also been added to the plan exhibits and the applicant has adjusted the proposed lot lines to be located outside of the 30-foot "no grade/mow" buffer area.

Three outlots are proposed in the final plat:

- Outlot A – stormwater management and woodland conservation
- Outlot B – potential City trail, woodland and wetland conservation
- Outlot C - mining reclamation area and future development area to be retained by property owner

Transportation (Vehicle, Pedestrian, Bicycle)

The Site Plan proposes to provide for the extension of the Vista View Drive eastward approximately 382 LF. Vista View Court will connect to Vista View Drive extending south approximately 587 LF. Both street right-of-ways are proposed for a 60 ft. width, which is consistent with the adjacent Harvest residential development to the west. The temporary stub at the east end of Vista View Drive will be barricaded near the south lot line of Lot 4, Block 1. This barricade was put in place to address fire turnaround requirements.

The developer is proposing sidewalks for both sides of these two streets, which is consistent with the adjacent Harvest neighborhood streets. The 2040 Comprehensive Plan and the Southwest Chaska Growth and Development Plan also show a trail connection to Creek Road on Vista View Drive. A regional trail is planned for Creek Road. The developer will need to work with Staff to determine the need for a trail on Vista View Drive that ultimately connects to the planned regional trail on Creek Road. The applicant is proposing a pedestrian connection to the regional trail consisting of sidewalks on both sides of Vista View Drive. The Site Plan shows three trail access points to the adjacent bluff and woodland areas, to the south, east, and north. The south access will be a potential paved trail; the east and north access points will be passive trail openings.

Utilities

Sewer and water utilities are currently available to serve the property. The site currently has a sanitary sewer trunk line extended through the property from west to east along the future

extension Vista View Drive. Previous phases of Club West development provided a watermain stub at the western edge of the property on Vista View Drive.

Parkland
The 2040 Comprehensive Plan and Southwest Chaska Growth & Development Plan do not identify an additional public neighborhood park need on this site due to its proximity to an existing private shared neighborhood playground within walking distance in the adjacent residential development (Club West 3rd Addition) and a planned public community park which will serve the neighborhood's recreational needs at the west end of Vista View Drive in Harvest West.

The applicant's proposed park and open space includes the land surrounding the residential lots on the north, east, and south edges. The open space will provide conservation and access to the wooded steep slope natural areas adjacent to the ravines. It includes a proposed stormwater management area in the northeast corner. It also includes trail access points to the adjacent wooded bluff areas, to the south, east, and north. Parkland credit can be given for any land accepted by the City as usable for public parks, playgrounds, trails, or open space. Parkland credit will not be given for bluff areas, wetlands, stormwater ponds, right-of-way, or land area deemed undevelopable that may be dedicated to the City. Since both Outlots A and B are not developable for public parkland, Staff has determined that the required parkland dedication will be achieved through fees in lieu of land.

Stormwater and Wetlands
Stormwater ponding is proposed in the northeast corner of the development in Outlot A. The applicant has prepared a stormwater management plan that accommodates the City and watershed stormwater management requirements, protecting steep slopes, and tree preservation. Ponding areas for the development's stormwater will need to limit impacts to the bluffs and ravines. The ravines serve a sizeable drainage area and are an important part of routing of the stormwater needs in southwest Chaska.

A wetland exists on the southwest portion of the site. This wetland will be preserved and appropriate buffers maintained within Outlot B.

Four of the neighboring properties to the west have expressed an interest in having their rear yards regraded with the project to improve their stormwater drainage and usability of the yards. The applicant's proposed Grading Plan shows the backyards of Lots 1-4, Block 2 being regraded with the project. The applicant has offered the four residents an allowance for the modification of their irrigation systems and re-sodding of the areas to be disturbed by the grading. In the event that the owners do not wish to move forward with the regrading, the project plans will be modified to include a small retaining wall adjacent to the four properties. The retaining wall would allow for the adjacent yards to remain in their present condition without any impacts.

Wooded Steep Slopes, Bluffs, and Tree Preservation
Although tree areas are minimal in the areas proposed for development on this site, tree preservation is an important component of this development, specifically along areas where wooded steep slopes/bluffs are present. The applicant has provided a tree survey and tree preservation plan to show how they are preserving trees on the site. 187 trees were surveyed.

26 trees will be removed as a part of the plan; only 2 of these trees are oaks and maples of small caliper (8 and 9 inches).

Architecture

The applicant intends to develop these residential lots exclusively for Robert Thomas Homes, a partner within the family of Tradition Companies. Robert Thomas Homes has constructed high quality and architecturally significant homes on all of the lots developed by Tradition Development within the Harvest Development. The architecture for these homes will incorporate the following design standards:

INTEGRAL HOME/GARAGE DESIGNS: Homes offered which have three car garages will mitigate the perceived prominence by varying garage door depth, detailing, integration of room massing above garages, or roof dormers, so as to obscure the familiar size and roof shape of three car garages. Garages shall be setback a minimum of 23′ from the front property line. Three-car garages shall be broken into a two-car section and a one-car section with the one car being recessed a minimum of 2′feet or shall have a tandem third stall.

EXPRESSIVE FRONT ENTRY AND HOME ORIENTATION TO STREETSCAPE: Beautification of streetscapes settings and corridors is a key differentiating factor that defines and expresses the characteristics of the neighborhood for all who live or visit there. Streets have purposefully been designed from suburban norms to incorporate boulevards and landscape, welcome and facilitate pedestrian and bicycle use of sidewalks and trail-ways, and to calm traffic speeds and movements while accommodating sufficient vehicular volumes. The incorporation of 60′ wide public rights of way and 32′ wide streets within the plan is in keeping with these objectives. To support these goals, homes will be positioned close to or at setbacks, so to help create desired spatial streetscape enclosure.

FOUR-SIDED DESIGNS: The neighborhoods road patterns, parkway entry and common central park intentionally create home sites where an individual home is visible from more than the front yard vantage point. We are working with the builder to prepare standards addressing architectural detailing of side and rear elevations. In circumstances where a building's sides or rear will be obscured from neighbor/neighborhood view, reduction in detailing consistency may be considered.

IDENTIFIABLE STYLE or BLEND OF STYLES: Homes and structures are strongly encouraged to project or emphasize a selected historic style, or tasteful, well proportioned, consistently detailed blend of compatible architectural styles. "In theme" materials, trim, windows, roof cornices, massing and color treatments convey this style.

MATERIALS: Naturally occurring materials are approved, as are fiber-cement or engineered wood products such as Smart Side products or equivalent shall be used for siding and exterior trim on all front elevations. Synthetic materials, aluminum or vinyl products may be used for soffit, fascia, specialty architectural treatments and frieze applications and siding on rear and side elevations.

COLORS: Bland shades of beige, tan or grey alone, with matching, minimal trim will not be preferred.

STREETSCAPE VARIETY: The same home floor plan and exterior/style may not be built on adjacent lots or the lot across the street. Variations in one-story and two-story elevations will be offered.

FENCING: Use of low fencing in lot fronts, sides and rear will be acceptable. Vinyl or aluminum fencing of an approved manufacturer and style will be incorporated into the Homeowners Association. Wood privacy fences will not be permitted by the Association documents except in locations where screening of county or state highways is needed.

LANDSCAPE, PLANTING AND ELEMENTS: All homes are subject to minimum landscape criteria with sod and irrigation as a requirement. All owners or their builders must provide detail landscape plans, prepared by a qualified design professional, obtain HOA/Developer prior approval and included in the home construction budget. To ensure quality materials, product warranty and proper and timely installation, all owners and their builders shall be required to utilize a professional landscape contractor for installation of minimum landscape requirements which must be installed with the initial construction of the home.

The developer has provided examples of house front elevations and roof plans for the housing products that will be pursued.

City ordinance dictates that housing may not be similar within two houses to each side, directly across the street or diagonal from the house in question. This ordinance also requires LP Smartside (or similar material) be used on all front elevations, 4-inch window trim on all windows, and 360-degree architecture be incorporated on corner lots and lots whose sides are visible from public rights of way or across from open spaces. 360 degree architecture would apply to these lots as shown on the final plat:

- Lot 4, Block 1
- Lot 1, Block 2
- Lot 8, Block 3

Development Costs (Infrastructure Improvements)
The City of Chaska has a number of area-wide development costs such as, but not limited to:

- Arterial Road Network
- Collector Roads
- Storm Sewer
- Trails
- Parks

Prior to final platting, the developer will need to work with City Staff to determine which of these are applicable and what those fees will be.

Adjacency to Mining Reclamation Site
The developer states that no materials are currently being extracted from the site and according to the property owner there is no plan in the future for further mining. The property owner is hauling in reclamation material and is spreading and compacting the material on the eastern portion of the site, east of the proposed residential development area. The reclamation activities are infrequent, occurring only as suitable materials become available. The reclamation fill material is clean compactable fill that the owner acquires during his business activities from

off-site locations. Material is unloaded in dump trucks on the site until a workable volume of the material is accumulated. At that point, the material is relocated to locations within the property to build the site out to the restoration grades that were approved of during the planning for the trunk sanitary sewer back in 2013/14. The grading of the fill is carried out by a crew of one to two workers using a D6 dozer and a vibratory compactor. The property owner anticipates that these reclamation activities will occur for a period of up to five years. At the completion of the reclamation and relocation of the owner's business, the remaining portion of the parcel will be developed including a street connection (Vista View Drive) to Creek Road.

The applicant has provided the City with the original permit/CUP for the mining operation which was approved by Carver County in 1981. The CUP states that the CUP is required to be renewed annually. The applicant has also submitted CUP renewal documents, which show that the CUP was renewed a number of times with Carver County (1985, 1992, 1996, 1998). The CUPs include an Operation Plan/General Requirements, hours of operation, the operational phase, the restoration phase, and performance securities and insurance. No renewals since 1998 have been submitted by the applicant. This property, along with the remaining portion of Chaska Township, was annexed into the City of Chaska in 2005.

The City of Chaska requires a permit for any mining/land excavation and reclamation/filling in excess of 200 cubic yards but less than 2,000 cubic yards of material, which can be approved administratively by the Zoning Administrator. Any land excavation and reclamation/filling in excess of 2,000 cubic yards of material requires a Conditional Use Permit. The permit requires an existing conditions map on the site and within 300 feet of the site, an excavation/filling plan, identification of truck hauling routes, methods of controlling dust, hours and period of operation. This operation was approved for a Conditional Use Permit at the January 23, 2023 City Council meeting.

It should be noted that the reclamation area will eventually develop into single-family lots to tie into the Club West 11th development. A ghost plat has been provided showing that there is potential for 11 additional lots that will connect out to Creek Road; this area will need to come back in for all applicable approvals (Concept, Preliminary, Final, etc) when it's ready to develop.

The developer states that the proposed residential development will be separated from the mining reclamation activities by a distance of over 200 feet from the nearest lot line. The developer is proposing to install trees as a natural screen to visually separate the residential lots from the adjacent reclamation activities. Provision of screening for Lot 4, Block 1, three coniferous trees on the east side of the lot, is shown on the landscaping plan. Additionally, screening will be provided on the east side (backyard) of Lot 8, Block 3. The developer will also provide a disclosure in their sale documents to future residents indicating that there is a mining operation adjacent.

Phasing

The developer anticipates the project will be developed in one phase with site grading to begin in 2023.

Neighborhood Meeting

The developer conducted a neighborhood meeting on March 23, 2022 from 6-7pm at the Chaska Community Center. Approximately 20 people attended the neighborhood meeting

throughout the hour and not everyone in attendance signed on the sign-in sheet. The developer presented a brief overview of the development project and housing product and then answered questions and explained the concept layout to the attendees. The main topics of concern and questions were related to:

- Plans for Creek Road and rumors of a cul-de-sac and converting the road to a trail
- Traffic coming east to Creek Road and connecting to Creek Road; it was explained that the street connection to Creek Road would be a future project and not part of the proposed development project
- Future extension of Vista View Drive shown connecting to Creek Road directly across from an existing house, safety and headlight concerns
- The need for an additional park area for this development, not enough park space in the development to the west
- Concern about construction traffic and how that traffic would enter the site; it was explained that construction traffic will be from the west and through the Harvest neighborhood
- The desire to preserve the existing trees on or near the property lines to the west bordering the Harvest neighborhood
- Concerns about topography and drainage along the western boundary to the existing lots
- Requests to grade the back yards of the existing homes bordering the project to have drainage directed to the rear property lines of the existing homes
- Concerns about the rear/easterly views over the open field being replaced by houses
- Expected schedule for the project start; it was explained that the project would start mid-summer at the earliest anticipating the preparation of engineering plans and the City PC and CC meeting schedules
- Question about the next steps for the project; it was explained that next steps are review and approval of the preliminary and final plat which will provide opportunities for residents to make comments at these meetings

Final Plat

The overall site will be platted into 18 lots and 3 outlots. The following are the proposed outlots and their dispositions:

- Outlot A – stormwater management and woodland conservation to be deeded to the City of Chaska
- Outlot B – potential City trail, woodland and wetland conservation to be deeded to the City of Chaska
- Outlot C - mining reclamation area and future development area to be retained by property owner

Deadline for Agency Action

The City of Chaska received the complete application for this request on Tuesday, December 6, 2022. Pursuant to Minnesota State Statutes the City is to act on this request by **Saturday, February 4, 2023 (60 days)**, however the City can provide the petitioner with a written letter for an additional 60-day review period for further review if so needed. This additional review period can extend to Wednesday, April 5, 2023. The City may, with the petitioner's consent, extend the review period beyond the Wednesday, April 5, 2023 date for an additional

60 days. Lastly, if the City denies the petitioners request "… it must state in writing the reasons for the denial at the time it denies the request."

PLANNING COMMISSION ACTION TAKEN 01/11/2023:

Motion to recommend to City Council approval of the Club West 11th Addition Final Plat for a 18-lot subdivision on 10.4 acres of land, subject to the following conditions:

1. Approvals shall be based on the following exhibits:
    a. Existing Conditions Survey, prepared by Alliant Engineering, dated June 27, 2022;
    b. Tree Inventory, prepared by Alliant Engineering, dated December 28, 2022;
    c. Details, prepared by Alliant Engineering, dated December 28, 2022;
    d. Site Plan, prepared by Alliant Engineering, dated December 28, 2022;
    e. Erosion and Sediment Control Plan including Notes and Details, prepared by Alliant Engineering, dated December 28, 2022;
    f. Grading Plan, prepared by Alliant Engineering, dated December 28, 2022;
    g. Pond and OCS Detail, prepared by Alliant Engineering, dated December 28, 2022;
    h. Sanitary Sewer and Watermain Plan, prepared by Alliant Engineering, dated December 28, 2022;
    i. Sanitary Sewer and Watermain Plan and Profiles, prepared by Alliant Engineering, dated December 28, 2022;
    j. Street and Storm Sewer Plan, prepared by Alliant Engineering, dated December 28, 2022;
    k. Street and Storm Sewer Plan and Profiles, prepared by Alliant Engineering, dated December 28, 2022;
    l. Intersection Details, prepared by Alliant Engineering, dated December 28, 2022;
    m. Landscape Plan, prepared by Alliant Engineering, dated December 28, 2022;
    n. Landscape Notes, prepared by Alliant Engineering, dated December 28, 2022;
2. Adherence with the City Engineer's Memo dated January 11, 2023
3. Provision of a 60 feet Right of Way width for all local streets.
4. Adherence to the City's Boulevard Tree Policy and local street section design.
5. Provision of sidewalks on both sides of all local streets.
6. Provision of a connection to the planned regional trail on Creek Road.
7. Adherence to the following building setbacks:
    a. Front (house): 23 feet
    b. Rear: 30 feet
    c. Side: 10 feet house/5 feet garage
    d. Side (corner): 20 feet
    e. Wooded Steep Slopes: 50 feet building setback and 30 feet no grade/no mow setback
    f. Wetlands: 30 feet
8. Prior to final plat approval, developer shall enter into an agreement with the City for the provision of necessary infrastructure and associated development costs.
9. Compliance with the City's anti-monotony and design requirements zoning ordinance (Section 15.28.290).
10. Preservation of the wooded steep slopes, including a 30-foot "no grade/mow" buffer and a 50-foot setback for buildings and parking from that wooded steep slope.

11. Provision of a storm water management plan meeting City and Carver County WMO standards.
12. Provision for trail access points into the areas designated as open space to the north, south, and east.
13. Provision that the property owner obtain a Conditional Use Permit (CUP) for the reclamation work on Kusske's site and to be obtained prior to a building permit being issued for Club West 11th.
14. Provision that Lot 6, Block 2 be revised to clip off the 20 foot wide area west of the wetland, and to be revised prior to final plat recording.
15. Provision that 360 degree architecture applies to these lots as shown on the final plat:
    a. Lot 4, Block 1
    b. Lot 1, Block 2
    c. Lot 8, Block 3
16. Subject to the approval of the Kusske CUP, which shall be recorded with, but subsequent to, the final plat for club west 11th

CITY COUNCIL ACTION REQUESTED

Motion to adopt Resolution No. 2023-9 approving the Club West 11th Addition Final Plat for an 18-lot subdivision (PC #2023-02).

CITY OF CHASKA
CARVER COUNTY, MINNESOTA

RESOLUTION

DATE_____FEBRUARY 27, 2023_____RESOLUTION NO._____2023-9___

MOTION BY COUNCILMEMBER_____SECOND BY COUNCILMEMBER_____

Resolution approving the Final Plat for Club West 11th Addition/Tradition Development/PC #2023-02

WHEREAS, the 10.4-acre site proposal consists of 18 single-family lots with a typical lot size of 75 feet wide by 125 feet deep; and

WHEREAS, the Site Plan shows this new residential development as an extension of the Harvest neighborhood to the west via an extension of Vista View Drive; and

WHEREAS, the entrance to the neighborhood will be from Vista View Drive and will end in a temporary turnaround until the extension of Vista View Drive to Creek Road in the future; and

WHEREAS, the 18 single-family residential lots include 4 lots on the north side of Vista View Drive and 14 lots oriented to Vista View Court, a cul-de-sac street extending south from Vista View Drive; and

WHEREAS, the developer is proposing sidewalks for both sides of these two streets, which is consistent with the adjacent Harvest neighborhood streets; and

WHEREAS, the Site Plan shows three trail access points to the adjacent bluff and woodland areas, to the south, east, and north; and

WHEREAS, the south access will be a potential paved trail, and the east and north access points will be passive trail openings; and

WHEREAS, the 2040 Comprehensive Plan and Southwest Chaska Growth & Development Plan do not identify a public neighborhood park need in this area due to its proximity to an existing private shared neighborhood playground within walking distance in the adjacent residential development (Club West 3rd Addition) and a planned public community park which will serve the neighborhood's recreational needs at the west end of Vista View Drive in Harvest West; and

WHEREAS, parkland credit can be given for any public park space that the City accepts, and parkland credit will not be given for bluff areas, wetlands, stormwater ponds, right-of-way, or land area deemed undevelopable that may be dedicated to the City; and

WHEREAS, since both Outlots A and B are not developable for public parkland, Staff has determined that the required parkland dedication will be achieved through fees in lieu of land; and

WHEREAS, the applicant has provided a tree survey and tree preservation plan to show how they are preserving trees on the site, and 187 trees were surveyed; and

WHEREAS, 26 trees will be removed as a part of the plan; only 2 of these trees are oaks and maples of small caliper (8 and 9 inches); and

WHEREAS, the developer states that no aggregate is currently being extracted from the site and according to the property owner there is no plan in the future for further mining; and

WHEREAS, the property owner is hauling in reclamation material and is spreading and compacting the material on the eastern portion of the site, east of the proposed residential development area; and

WHEREAS, the reclamation activities are infrequent, occurring only as suitable materials become available; and

WHEREAS, the property owner anticipates that these reclamation activities will occur for a period of up to five years, and at the completion of the reclamation and relocation of the owner's business, the remaining portion of the parcel will be developed including a street connection to Creek Road; and

WHEREAS, this operation was approved for a Conditional Use Permit at the January 23, 2023 City Council meeting; and

WHEREAS, the developer states that the proposed residential development will be separated from the mining reclamation activities by a distance of over 200 feet from the nearest lot line; and

WHEREAS, the developer is proposing to install trees as a natural screen to visually separate the residential lots from the adjacent reclamation activities; and

WHEREAS, provision of screening for Lot 4, Block 1, three coniferous trees on the east side of the lot, is shown on the landscaping plan; and

WHEREAS, additionally, screening will be provided on the east side (backyard) of Lot 8, Block 3; and

WHEREAS, three outlots are proposed in the final plat and are as follows:

- Outlot A – stormwater management and woodland conservation
- Outlot B – potential City trial, woodland and wetland conservation
- Outlot C - mining reclamation area and future development area to be retained by property owner

WHEREAS, on January 11, 2023 the Planning Commission recommended approval to the City Council of the Final Plat for Club West 11th Addition (PC#2023-02); and

NOW, THEREFORE, BE IT RESOLVED, by the City Council of the City of Chaska, Minnesota, hereby approves the Final Plat for Club West 11th Addition (PC#2023-02), subject to the aforementioned stipulations and following conditions:

1. Approvals shall be based on the following exhibits:
    a. Existing Conditions Survey, prepared by Alliant Engineering, dated June 27, 2022;
    b. Tree Inventory, prepared by Alliant Engineering, dated February 10, 2023;
    c. Details, prepared by Alliant Engineering, dated February 10, 2023;
    d. Site Plan, prepared by Alliant Engineering, dated February 10, 2023;
    e. Erosion and Sediment Control Plan including Notes and Details, prepared by Alliant Engineering, dated February 10, 2023;
    f. Grading Plan, prepared by Alliant Engineering, dated February 10, 2023;
    g. Pond and OCS Detail, prepared by Alliant Engineering, dated February 10, 2023;

h. Sanitary Sewer and Watermain Plan, prepared by Alliant Engineering, dated February 10, 2023;
i. Sanitary Sewer and Watermain Plan and Profiles, prepared by Alliant Engineering, dated February 10, 2023;
j. Street and Storm Sewer Plan, prepared by Alliant Engineering, dated February 10, 2023;
k. Street and Storm Sewer Plan and Profiles, prepared by Alliant Engineering, dated February 10, 2023;
l. Intersection Details, prepared by Alliant Engineering, dated February 10, 2023;
m. Landscape Plan, prepared by Alliant Engineering, dated February 10, 2023;
n. Landscape Notes, prepared by Alliant Engineering, dated February 10, 2023;

2. Adherence with the City Engineer's Memo dated January 11, 2023
3. Provision of a 60 feet Right of Way width for all local streets.
4. Adherence to the City's Boulevard Tree Policy and local street section design.
5. Provision of sidewalks on both sides of all local streets.
6. Provision of a connection to the planned regional trail on Creek Road.
7. Adherence to the following building setbacks:
    a. Front (house): 23 feet
    b. Rear: 30 feet
    c. Side: 10 feet house/5 feet garage
    d. Side (corner): 20 feet
    e. Wooded Steep Slopes: 50 feet building setback and 30 feet no grade/no mow setback
    f. Wetlands: 30 feet
8. Prior to final plat approval, developer shall enter into an agreement with the City for the provision of necessary infrastructure and associated development costs.
9. Compliance with the City's anti-monotony and design requirements zoning ordinance (Section 15.28.290).
10. Preservation of the wooded steep slopes, including a 30-foot "no grade/mow" buffer and a 50-foot setback for buildings and parking from that wooded steep slope.
11. Provision of a storm water management plan meeting City and Carver County WMO standards.
12. Provision for trail access points into the areas designated as open space to the north, south, and east.
13. Provision that the property owner obtain a Conditional Use Permit (CUP) for the reclamation work on Kusske's site and to be obtained prior to a building permit being issued for Club West 11th.
14. Provision that 360 degree architecture applies to these lots as shown on the final plat:
    a. Lot 4, Block 1
    b. Lot 1, Block 2
    c. Lot 8, Block 3
15. Subject to the approval of the Kusske CUP, which shall be recorded with, but subsequent to, the final plat for club west 11th

Passed and adopted by the City Council of the City of Chaska, Minnesota, this 27th day of February, 2023.

_____
Mike Huang, Mayor Pro Tem

Attest:_____
Chaska Deputy Clerk

City of Chaska
Memorandum

To: **Planning Commission**
From: **Alex Mollenkamp, Assistant City Engineer**
on behalf of Matt Clark, City Engineer
Date: **January 11, 2023**
Subject: **Club West 11th Addition**

The 11th Addition of Club West proposes a consistent development layout that was approved with the preliminary plat. The development will install extensions of sewer and water utilities to service the proposed lots. Development access for the site will be off Vista View Drive. City stormwater standards shall be met and a permit from the watershed agency is required prior to grading occurring on the site. The final construction documents will need to be consistent with all City standards and policies. Prior to final plat approval, the Developer is required to enter into an agreement with the City for provisions of necessary infrastructure, associated costs, and City fees.

CLUB WEST 11TH ADDITION

CHASKA, MINNESOTA

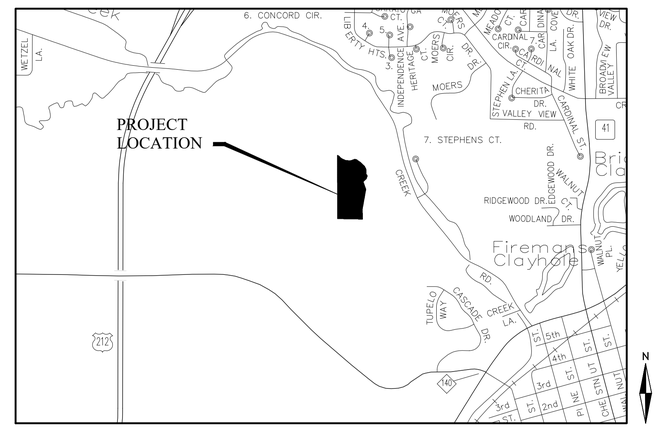

VICINITY MAP

NOT TO SCALE

SHEET INDEX

SHEET INDEX	NO.
COVER SHEET	1
EXISTING CONDITIONS SURVEY	2
TREE INVENTORY	3-4
DETAILS	5-6
SITE PLAN	7
EROSION AND SEDIMENT CONTROL PLAN	8
EROSION AND SEDIMENT CONTROL NOTES	9
GRADING PLAN	10
POND AND OCS DETAIL	11
SANITARY SEWER AND WATERMAIN PLAN	12
SANITARY SEWER AND WATERMAIN PLAN AND PROFILES	13
STREET AND STORM SEWER PLAN	14
STREET AND STORM SEWER PLAN AND PROFILES	15
INTERSECTION DETAILS	16
LANDSCAPE PLAN	17
LANDSCAPE NOTES	18

APPLICANT/OWNER

TRADITION DEVELOPMENT
16972 BRANDTJEN FARM DRIVE
LAKEVILLE, MN 55044
CONTACT: PAT WRASE
PH: 952-332-8704
EM: patrick.wrase@traditiondevelopment.com

CONSULTANT

ALLIANT ENGINEERING, INC.
733 MARQUETTE AVE
SUITE 700
MINNEAPOLIS, MN 55402
PH: 612-758-3080
FX: 612-758-3099

ENGINEER

DAVID NASH
LICENSE NO. 21836
EM: dnash@alliant-inc.com

SURVEYOR

CONTACT: PETER GOERS
LICENSE NO. 44110
EM: pgoers@alliant-inc.com

LANDSCAPE ARCHITECT

MARK KRONBECK
LICENSE NO. 26222
EM: mkronbeck@alliant-inc.com

ALLIANT
733 Marquette Avenue
Suite 700
Minneapolis, MN 55402
612.758.3080
www.alliant-inc.com

CLUB WEST 11TH ADDITION
CHASKA, MINNESOTA
CONSTRUCTION DOCUMENTS
COVER SHEET

I hereby certify that this plan, specification, or report was prepared by me or under my direct supervision and that I am a duly Licensed PROFESSIONAL ENGINEER under the laws of the State of MINNESOTA

DAVID NASH, PE

8/31/2022 — Date
21836 — License No.

QUALITY ASSURANCE/CONTROL

BY — DATE

DATE	ISSUE
8/31/2022	CITY SUBMITTAL
11/29/2022	CITY RESUBMITTAL
12/28/2022	CITY RESUBMITTAL 1
1/11/2023	LOT 6 UPDATE 2
2/10/23	LOT 1 AND 6 UPDATE 3

PROJECT TEAM DATA

DESIGNED:	DN
DRAWN:	AA JP
PROJECT NO:	213-0121

1

SHEET 1 OF 18

Drawing name: X:\2013\130121\plan sheets\Final Plat\130121cove.dwg Feb 10, 2023 - 10:41am

EXISTING CONDITIONS SURVEY

LEGAL DESCRIPTION

That part of Outlot A, KUSSKE ESTATES, according to the recorded plat thereof, Carver County, Minnesota, described as follows:

Beginning at the southwest corner of said Outlot A; thence North 00 degrees 07 minutes 35 seconds West, assumed bearing along the west line of said Outlot A, a distance of 1071.86 feet; thence South 63 degrees 27 minutes 13 seconds East 36.64 feet; thence South 40 degrees 45 minutes 22 seconds East 32.07 feet; thence South 48 degrees 50 minutes 15 seconds East 21.53 feet; thence South 64 degrees 22 minutes 45 seconds East 74.98 feet; thence South 83 degrees 01 minutes 27 seconds East 33.34 feet; thence South 87 degrees 26 minutes 19 seconds East 45.30 feet; thence North 77 degrees 06 minutes 10 seconds East 33.26 feet; thence North 68 degrees 55 minutes 25 seconds East 50.67 feet; thence South 75 degrees 58 minutes 57 seconds East 30.59 feet; thence South 54 degrees 36 minutes 25 seconds East 85.32 feet; thence South 46 degrees 21 minutes 10 seconds East 97.69 feet; thence South 22 degrees 28 minutes 01 seconds East 58.17 feet; thence South 00 degrees 31 minutes 18 seconds East 77.09 feet; thence South 51 degrees 26 minutes 20 seconds East 20.81 feet; thence South 05 degrees 01 minutes 50 seconds East 22.78 feet; thence South 21 degrees 56 minutes 43 seconds West 43.98 feet; thence South 46 degrees 23 minutes 05 seconds West 70.99 feet; thence South 19 degrees 18 minutes 49 seconds East 135.39 feet; thence South 10 degrees 02 minutes 36 seconds West 333.58 feet; thence South 00 degrees 20 minutes 04 seconds East 174.54 feet to the south line of said Outlot A; thence North 89 degrees 02 minutes 08 seconds West, along said south line, 424.19 feet to the point of beginning.

Abstract Property.

NOTES

1. This survey and the property description shown here on are based upon information found in the commitment for title insurance prepared by CHB Title, LLC as agent for Old Republic National Title Insurance Company, file no. 55014, dated March 13, 2022.

2. The locations of underground utilities are depicted based on information from Gopher State One Call system. The information was provided by a combination of available maps, proposed plans, city records, and field locations, which may not be exact. Verify all utilities critical to construction or design.

3. The west line of Outlot A, KUSSKE ESTATES, is assumed to have a bearing of N00°07'35"W.

4. All distances are in feet.

5. The property has access to Vista View Drive, a public right-of-way.

6. Contours shown within surveyed area are shown per field locates. Contours shown outside the surveyed area are shown per LiDAR information provided by the Minnesota Geospatial Information Office.

7. The area of the property is 453,038 sq. ft. or 10.40 acres.

8. Benchmark No. 1: Top Nut of Hydrant on the south side of Vista View Drive and located 11.6 feet west of the property has an elevation of 899.64 feet NGVD 29.

9. Benchmark No. 2: Top Nut of Hydrant at the southeast quadrant of Vista View Drive and Paint Sky Trail has an elevation of 902.64 feet NGVD 29.

LEGEND

- FOUND IRON MONUMENT
- SET IRON MONUMENT
- WATER VALVE
- SANITARY MANHOLE
- CATCH BASIN
- FIRE HYDRANT
- CULVERT
- COMMUNICATION HAND HOLE
- COMMUNICATIONS PEDESTAL
- 890.3 SPOT ELEVATION
- 3374 TREE TAG NO.
- COT COTTONWOOD
- MPL MAPLE
- GAS
- SANITARY SEWER
- WATER MAIN
- UNDERGROUND ELECTRIC
- FENCE
- GRAVEL
- LIMITS OF SURVEYED PROPERTY
- TREE LINE
- CONCRETE

N

0 50 100 200
SCALE IN FEET

ALLIANT ENGINEERING
733 Marquette Ave, Ste 700
Minneapolis, MN 55402
612.758.3080 MAIN
612.758.3099 FAX
www.alliant-inc.com

I hereby certify that this survey, plan, or report was prepared by me or under my direct supervision and that I am a duly Licensed Land Surveyor under the laws of the state of Minnesota.

DANIEL P EKREM
Print Name

Signature

June 27, 2022 — Date

57366 — License Number

CLUB WEST 11TH

UNDEFINED ADDRESS

CHASKA, MN

DRAWN BY	TC
CHECKED BY	DPE
DATE ISSUED	6/27/22
SCALE	1"=100'
JOB NO.	213-0121
FIELDWORK BY	RS,CN

Drawing name: X:\2013\130121\survey\existing conditions\130121Surv.dwg Feb 10, 2023 - 10:44am

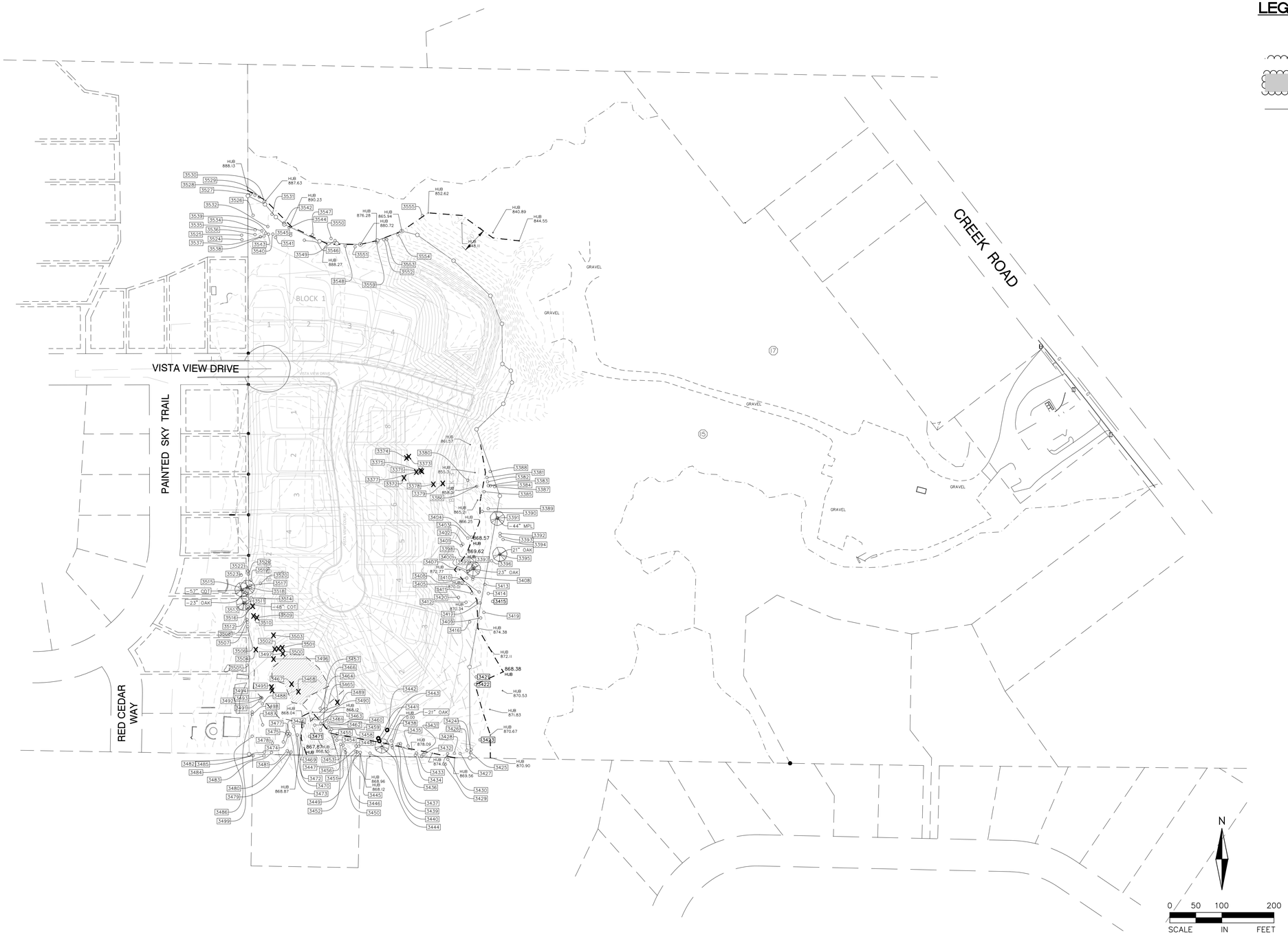

LEGEND:

- EXISTING SIGNIFICANT TREE
- EXISTING SIGNIFICANT TREE TO BE REMOVED
- EXISTING TREE/SHRUB LINE
- EXISTING TREE/SHRUBS TO BE CLEARED
- EXISTING TREE DRIPLINE, FIELD LOCATED

ALLIANT
733 Marquette Avenue
Suite 700
Minneapolis, MN 55402
612.758.3080
www.alliant-inc.com

CLUB WEST 11TH ADDITION

CHASKA, MINNESOTA

CONSTRUCTION DOCUMENTS

TREE INVENTORY

I hereby certify that this plan, specification, or report was prepared by me or under my direct supervision and that I am a duly Licensed PROFESSIONAL ENGINEER under the laws of the State of MINNESOTA

DAVID NASH, PE

8/31/2022	21836
Date	License No.

QUALITY ASSURANCE/CONTROL

BY	DATE

DATE	ISSUE
8/31/2022	CITY SUBMITTAL
11/29/2022	CITY RESUBMITTAL
12/28/2022	CITY RESUBMITTAL 1
1/11/2023	LOT 6 UPDATE 2
2/10/23	LOT 1 AND 6 UPDATE 3

PROJECT TEAM DATA

DESIGNED:	DN
DRAWN:	AA JP
PROJECT NO:	213-0121

3

SHEET 3 OF 18

Drawing name: X:\2013\130121\plan sheets\Final Plat\130121tree.dwg Feb 10, 2023 - 10:52am

TAG #	DBH	Species	Comments/Notes
~~3373~~	~~12~~	~~Cottonwood (Populus deltoides)~~	
~~3373~~	~~11~~	~~American Elm (Ulmus americana)~~	
~~3374~~	~~6~~	~~Northern Red Oak (Quercus rubra)~~	
~~3375~~	~~8~~	~~Bur Oak (Quercus macrocarpa)~~	
~~3376~~	~~10~~	~~Black Walnut (Juglans nigra)~~	
~~3377~~	~~10~~	~~American Elm (Ulmus americana)~~	
3378	6	American Elm (Ulmus americana)	
3379	7	Boxelder (Acer negundo)	
3380	10	Boxelder (Acer negundo)	
3381	9	Cottonwood (Populus deltoides)	
3382	11	Cottonwood (Populus deltoides)	
3383	8	Cottonwood (Populus deltoides)	
3384	10	Cottonwood (Populus deltoides)	
3385	13	Cottonwood (Populus deltoides)	
3386	10	American Elm (Ulmus americana)	
3387	6	Cottonwood (Populus deltoides)	
3388	8	Cottonwood (Populus deltoides)	
3389	8	Sugar Maple (Acer saccharum)	8X7
3390	15	Sugar Maple (Acer saccharum)	
3391	47	Sugar Maple (Acer saccharum)	
3392	12	Northern Red Oak (Quercus rubra)	
3393	10	Sugar Maple (Acer saccharum)	
3394	20	American Elm (Ulmus americana)	
3395	19	Northern Red Oak (Quercus rubra)	
3396	10	Black Walnut (Juglans nigra)	
3397	22	Northern Red Oak (Quercus rubra)	
3398	10	Bitternut Hickory (Carya cardiformis)	
3399	19	Black Walnut (Juglans nigra)	
3400	6	American Elm (Ulmus americana)	
3401	7	Red Elm (Ulmus rubra)	
3402	13	Sugar Maple (Acer saccharum)	
3403	6	Sugar Maple (Acer saccharum)	
3404	10	Bitternut Hickory (Carya cardiformis)	
3405	11	Juniper (Juniperus virginiana)	
3406	12	Northern Red Oak (Quercus rubra)	
3407	11	Basswood (Tilia americana)	
3408	7	American Elm (Ulmus americana)	
3409	18	Northern Red Oak (Quercus rubra)	
3410	44	Basswood (Tilia americana)	
3411	15	Basswood (Tilia americana)	
3412	12	Bur Oak (Quercus macrocarpa)	
3413	19	Northern Red Oak (Quercus rubra)	
3414	8	Bitternut Hickory (Carya cardiformis)	
3415	10	Basswood (Tilia americana)	
3416	6	American Elm (Ulmus americana)	
3417	10	Basswood (Tilia americana)	
3418	10	Basswood (Tilia americana)	
3419	8	Basswood (Tilia americana)	
3420	6	Bitternut Hickory (Carya cardiformis)	
3421	15	Northern Red Oak (Quercus rubra)	
3422	21	Northern Red Oak (Quercus rubra)	
3423	48	Bur Oak (Quercus macrocarpa)	
3424	8	Basswood (Tilia americana)	
3425	17	Northern Red Oak (Quercus rubra)	
3426	13	Northern Red Oak (Quercus rubra)	
3427	13	Northern Red Oak (Quercus rubra)	
3428	15	Northern Red Oak (Quercus rubra)	
3429	24	Northern Red Oak (Quercus rubra)	12X12
3430	12	Northern Red Oak (Quercus rubra)	
3431	9	Basswood (Tilia americana)	
3432	9	Northern Red Oak (Quercus rubra)	
3433	20	Bur Oak (Quercus macrocarpa)	
3434	24	Basswood (Tilia americana)	16X8
3435	12	Green Ash (Fraxinus pennsylvanica)	
3436	10	Green Ash (Fraxinus pennsylvanica)	
3437	6	Green Ash (Fraxinus pennsylvanica)	
3438	6	Green Ash (Fraxinus pennsylvanica)	
3439	66	Basswood (Tilia americana)	18X18X15X15
3440	23	Northern Red Oak (Quercus rubra)	
3441	7	Ironwood (Ostrya virginiana)	
3442	8	Juniper (Juniperus virginiana)	
3443	19	Northern Red Oak (Quercus rubra)	
3444	13	Basswood (Tilia americana)	
3445	12	Northern Red Oak (Quercus rubra)	
3446	16	Basswood (Tilia americana)	
3447	19	Basswood (Tilia americana)	
3448	16	Basswood (Tilia americana)	
3449	10	Northern Red Oak (Quercus rubra)	
3450	22	Northern Red Oak (Quercus rubra)	
3451	17	Northern Red Oak (Quercus rubra)	
3452	8	Bitternut Hickory (Carya cardiformis)	
3453	7	Bitternut Hickory (Carya cardiformis)	
3454	6	Sugar Maple (Acer saccharum)	
~~3455~~	~~12~~	~~Green Ash (Fraxinus pennsylvanica)~~	
3456	10	Sugar Maple (Acer saccharum)	
~~3457~~	~~9~~	~~Sugar Maple (Acer saccharum)~~	
~~3458~~	~~13~~	~~Green Ash (Fraxinus pennsylvanica)~~	
~~3459~~	~~17~~	~~Green Ash (Fraxinus pennsylvanica)~~	
~~3460~~	~~6~~	~~American Elm (Ulmus americana)~~	
3461	12	Sugar Maple (Acer saccharum)	
3462	16	Sugar Maple (Acer saccharum)	
3463	20	Bitternut Hickory (Carya cardiformis)	
3464	9	Boxelder (Acer negundo)	
3465	16	American Elm (Ulmus americana)	
~~3466~~	~~10~~	~~Green Ash (Fraxinus pennsylvanica)~~	
~~3467~~	~~10~~	~~American Elm (Ulmus americana)~~	
~~3468~~	~~12~~	~~American Elm (Ulmus americana)~~	
3469	12	Sugar Maple (Acer saccharum)	
3470	14	Red Elm (Ulmus rubra)	
3471	17	Basswood (Tilia americana)	
3472	10	American Elm (Ulmus americana)	
3473	16	Boxelder (Acer negundo)	
3474	16	Boxelder (Acer negundo)	
3475	8	American Elm (Ulmus americana)	
3476	7	American Elm (Ulmus americana)	
3477	7	American Elm (Ulmus americana)	
3478	17	Boxelder (Acer negundo)	
3479	18	Hackberry (Celtis occidentalis)	
3480	18	Hackberry (Celtis occidentalis)	
3481	8	American Elm (Ulmus americana)	
3482	26	Boxelder (Acer negundo)	12X14
3483	12	Hackberry (Celtis occidentalis)	
3484	16	Green Ash (Fraxinus pennsylvanica)	
3485	11	Hackberry (Celtis occidentalis)	
3486	14	American Elm (Ulmus americana)	
3487	16	Red Elm (Ulmus rubra)	
3488	9	American Elm (Ulmus americana)	
3489	10	Boxelder (Acer negundo)	
3490	9	Sugar Maple (Acer saccharum)	
3491	13	American Elm (Ulmus americana)	
3492	10	Red Elm (Ulmus rubra)	
3493	11	American Elm (Ulmus americana)	
~~3494~~	~~17~~	~~American Elm (Ulmus americana)~~	
~~3495~~	~~19~~	~~American Elm (Ulmus americana)~~	
~~3496~~	~~11~~	~~American Elm (Ulmus americana)~~	
~~3497~~	~~12~~	~~American Elm (Ulmus americana)~~	
3498	9	Red Elm (Ulmus rubra)	
3499	15	American Elm (Ulmus americana)	
~~3500~~	~~8~~	~~American Elm (Ulmus americana)~~	
~~3501~~	~~10~~	~~American Elm (Ulmus americana)~~	
~~3502~~	~~12~~	~~American Elm (Ulmus americana)~~	
~~3503~~	~~10~~	~~American Elm (Ulmus americana)~~	
~~3504~~	~~12~~	~~Boxelder (Acer negundo)~~	
3505	17	Red Elm (Ulmus rubra)	
3506	16	Red Elm (Ulmus rubra)	
3507	17	Sugar Maple (Acer saccharum)	
3508	9	Red Elm (Ulmus rubra)	
~~3509~~	~~10~~	~~Red Elm (Ulmus rubra)~~	
~~3510~~	~~6~~	~~American Elm (Ulmus americana)~~	
3511	12	American Elm (Ulmus americana)	
3512	10	American Elm (Ulmus americana)	
3513	60	Cottonwood (Populus deltoides)	30X30
3514	18	Northern Red Oak (Quercus rubra)	
3515	57	Cottonwood (Populus deltoides)	
~~3516~~	~~14~~	~~Boxelder (Acer negundo)~~	
3517	25	Cottonwood (Populus deltoides)	
3518	8	Northern Red Oak (Quercus rubra)	
3519	16	Boxelder (Acer negundo)	8X8
3520	8	Northern Red Oak (Quercus rubra)	
3521	12	American Elm (Ulmus americana)	
3522	15	American Elm (Ulmus americana)	
3523	8	American Elm (Ulmus americana)	
3524	13	Basswood (Tilia americana)	
3525	12	Basswood (Tilia americana)	
3526	10	Northern Red Oak (Quercus rubra)	
3527	32	Northern Red Oak (Quercus rubra)	16X16
3528	19	Northern Red Oak (Quercus rubra)	
3529	14	Northern Red Oak (Quercus rubra)	
3530	26	Basswood (Tilia americana)	14X12
3531	8	Northern Red Oak (Quercus rubra)	
3532	7	Northern Red Oak (Quercus rubra)	
3534	10	Northern Red Oak (Quercus rubra)	
3535	9	Northern Red Oak (Quercus rubra)	
3536	12	Northern Red Oak (Quercus rubra)	
3537	12	Northern Red Oak (Quercus rubra)	
3538	9	Northern Red Oak (Quercus rubra)	
3539	10	Northern Red Oak (Quercus rubra)	
3540	10	Northern Red Oak (Quercus rubra)	
3541	16	Northern Red Oak (Quercus rubra)	
3542	63	Northern Red Oak (Quercus rubra)	24X24X15
3543	9	Northern Red Oak (Quercus rubra)	
3544	38	Northern Red Oak (Quercus rubra)	24X14
3545	10	Northern Red Oak (Quercus rubra)	
3546	10	Basswood (Tilia americana)	
3547	34	Northern Red Oak (Quercus rubra)	18X16
3548	16	Northern Red Oak (Quercus rubra)	
3549	45	Northern Red Oak (Quercus rubra)	25X20
3550	14	Northern Red Oak (Quercus rubra)	
3551	12	Northern Red Oak (Quercus rubra)	
3552	18	Basswood (Tilia americana)	10X8
3553	8	Basswood (Tilia americana)	
3554	16	Cottonwood (Populus deltoides)	
3555	14	Cottonwood (Populus deltoides)	
3559	14	Northern Red Oak (Quercus rubra)	

LEGEND:

DENOTES TREE REMOVAL

ALLIANT
733 Marquette Avenue
Suite 700
Minneapolis, MN 55402
612.758.3080
www.alliant-inc.com

CLUB WEST 11TH ADDITION

CHASKA, MINNESOTA

CONSTRUCTION DOCUMENTS

TREE INVENTORY

I hereby certify that this plan, specification, or report was prepared by me or under my direct supervision and that I am a duly Licensed PROFESSIONAL ENGINEER under the laws of the State of MINNESOTA

DAVID NASH, PE

8/31/2022 — Date

21836 — License No.

QUALITY ASSURANCE/CONTROL

BY — DATE

DATE	ISSUE
8/31/2022	CITY SUBMITTAL
11/29/2022	CITY RESUBMITTAL
12/28/2022	CITY RESUBMITTAL 1
1/11/2023	LOT 6 UPDATE 2
2/10/23	LOT 1 AND 6 UPDATE 3

PROJECT TEAM DATA

DESIGNED: DN
DRAWN: AA JP
PROJECT NO: 213-0121

SHEET 4 of 18

Drawing name: X:\2013\13012\1\plan sheets\Final Plat\13012tree.dwg Feb 10, 2023 - 10:52am

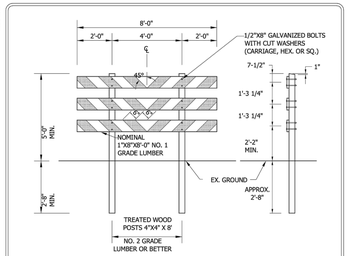

NOTE
THE BARRICADE BOARD FACE SURFACES SHALL BE FULLY REFLECTORIZED IN ALTERNATE SILVER-WHITE AND RED STRIPING, USING A REFLECTIVE SHEETING CONFORMING TO THE REQUIREMENTS OF MNDOT SPEC. 3352.

PRIOR TO INSTALLING THE REFLECTIVE SHEETING, THE BARRICADE BOARDS SHALL BE GIVEN A COMPLETE COATING OF WHITE WOOD PRIMER PAINT FOLLOWED BY A SECOND COAT OF WHITE EXTERIOR APPLIED ONLY TO THE SURFACES NOT COVERED WITH REFLECTIVE SHEETING.

THE BARRICADE BOARDS SHALL BE COMPLETELY PAINTED AND REFLECTORIZED SHEETING APPLIED BEFORE BEING INSTALLED ON THE POSTS.

THE PLACEMENT OF THE BARRICADE SHALL BE 10'-0" FROM THE END OF THE BITUMINOUS ROAD WITH THE BARRICADE CENTERED ON THE ROADWAY FACING THE FLOW OF TRAFFIC.

Stantec — 3535 Vadnais Ctr N, St Paul, MN 55110, www.stantec.com

PERMANENT BARRICADE
CHASKA, MINNESOTA

LAST REVISION: MARCH 2008
PLATE NO. GEN-4

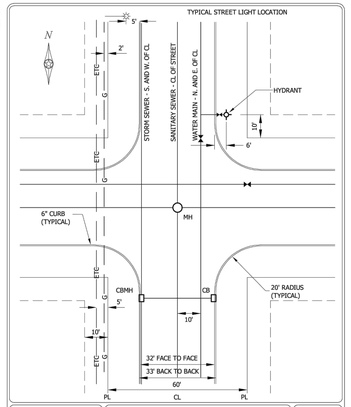

Stantec — 3535 Vadnais Ctr N, St Paul, MN 55110, www.stantec.com

TYPICAL UTILITY LOCATIONS (PUBLIC AND PRIVATE)
CHASKA, MINNESOTA

LAST REVISION: MARCH 2016
PLATE NO. GEN-5

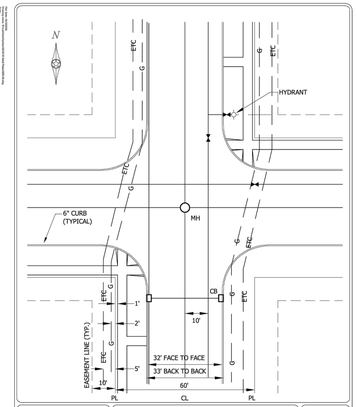

Stantec — 3535 Vadnais Ctr N, St Paul, MN 55110, www.stantec.com

TYPICAL SMALL UTILITY CORRIDORS WITH AND WITHOUT SIDEWALK
CHASKA, MINNESOTA

LAST REVISION: MARCH 2016
PLATE NO. GEN-5A

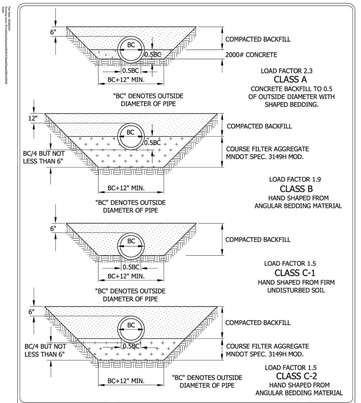

Stantec — 3535 Vadnais Ctr N, St Paul, MN 55110, www.stantec.com

BEDDING METHODS FOR RCP OR DIP
CHASKA, MINNESOTA

LAST REVISION: MARCH 2001
PLATE NO. GEN-6

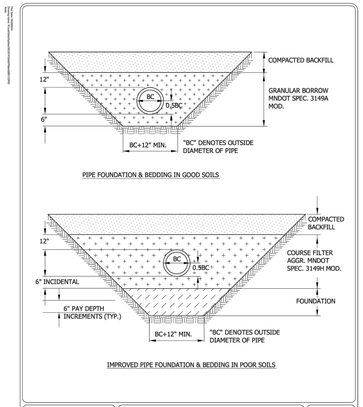

Stantec — 3535 Vadnais Ctr N, St Paul, MN 55110, www.stantec.com

BEDDING METHODS FOR PVC
CHASKA, MINNESOTA

LAST REVISION: MARCH 2008
PLATE NO. GEN-7

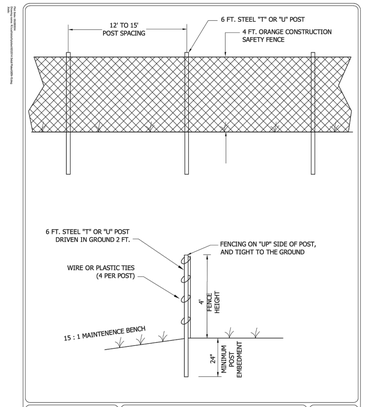

Stantec — 3535 Vadnais Ctr N, St Paul, MN 55110, www.stantec.com

ORANGE CONSTRUCTION SAFETY FENCE
CHASKA, MINNESOTA

LAST REVISION: MARCH 2001
PLATE NO. GEN-10

PRECAST INVERT WITH A MINIMUM 1% THROUGH SLOPE REQUIRED.

PRECAST INVERT MUST BE 1/2 DIAMETER OF THE PIPE AND BENCHES SLOPED 2" TOWARD THE INVERT.

FRAME	A	B
R1642-2310B	27"	7"
R1755G	27"	7"

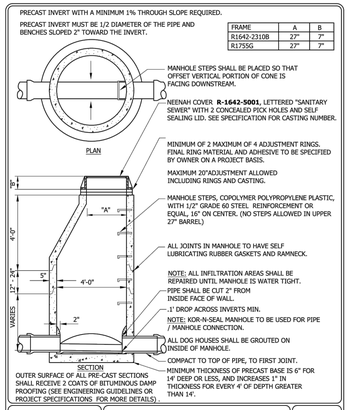

Stantec — 3535 Vadnais Ctr N, St Paul, MN 55110, www.stantec.com

SANITARY SEWER MANHOLE
CHASKA, MINNESOTA

LAST REVISION: MARCH 2018
PLATE NO. SAN-1

FRAME	A	B
R1642-2310B	27"	7"
R1755G	27"	7"

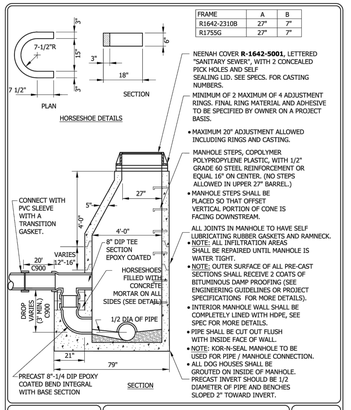

Stantec — 3535 Vadnais Ctr N, St Paul, MN 55110, www.stantec.com

SANITARY SEWER DROP INLET MANHOLE
CHASKA, MINNESOTA

LAST REVISION: MARCH 2018
PLATE NO. SAN-4

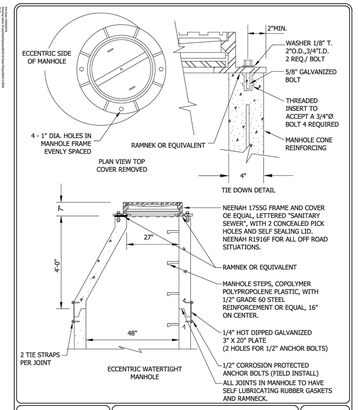

Stantec — 3535 Vadnais Ctr N, St Paul, MN 55110, www.stantec.com

WATERTIGHT CASTING FOR SANITARY SEWER MANHOLE
CHASKA, MINNESOTA

LAST REVISION: MARCH 2018
PLATE NO. SAN-5

NOTES: CORE BLUE BOLTS REQUIRED FOR ALL MECHANICAL FITTINGS. ANTI-CORROSIVE COATING REQUIRED ON ALL BOLTS AND TIE ROD ASSEMBLIES.

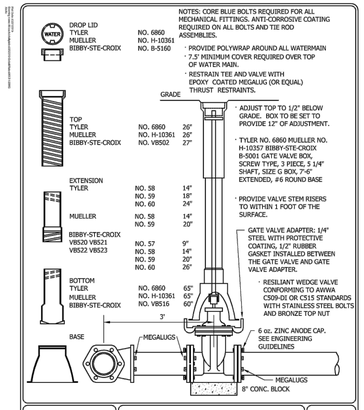

Stantec — 3535 Vadnais Ctr N, St Paul, MN 55110, www.stantec.com

GATE VALVE AND BOX INSTALLATION
CHASKA, MINNESOTA

LAST REVISION: MARCH 2019
PLATE NO. WAT-1

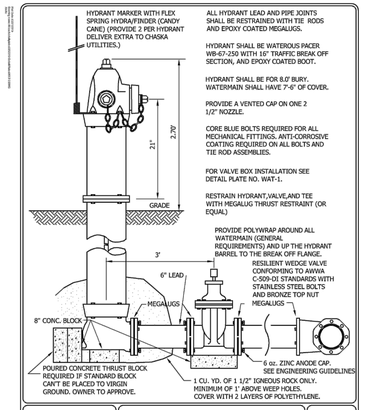

Stantec — 3535 Vadnais Ctr N, St Paul, MN 55110, www.stantec.com

WATEROUS PACER HYDRANT AND VALVE INSTALLATION
CHASKA, MINNESOTA

LAST REVISION: MARCH 2019
PLATE NO. WAT-2

NOTES:
1. SHAPE OF BACK OF BUTTRESS MAY VARY AS LONG AS POURED AGAINST FIRM UNDISTURBED EARTH.
2. DIMENSION C1,C2,C3 SHOULD BE LARGE ENOUGH TO MAKE ANGLE Θ EQUAL TO OR LARGER THAN 45°.
3. DIMENSION A1,A2,A3 SHOULD BE AS LARGE AS POSSIBLE WITHOUT INTERFERING WITH M3 BOLTS.
4. PROVIDE POLYETHYLENE WRAP AROUND ALL WATERMAIN.
5. ALL BENDS AND FITTINGS SHALL BE RESTRAINED WITH BOTH EPOXY COATED MEGA-LUGS AND THRUST BLOCKING.

PIPE SIZE	BUTTRESS DIMENSIONS					
	22 1/2° BEND		45° BEND		90° BEND	
	B_1	D_1	B_2	D_2	B_3	D_3
6"	1'-5"	1'-5"	1'-5"	1'-5"	2'-1"	1'-6"
8"	1'-5"	1'-5"	2'-1"	1'-6"	2'-8"	2'-0"
12"	1'-10"	1'-10"	3'-4"	2'-0"	4'-9"	2'-6"
16"	3'-0"	2'-0"	3'-10"	3'-0"	6'-2"	3'-6"
20"	3'-4"	2'-8"	5'-0"	3'-4"	8'-4"	4'-0"
24"	4'-4"	3'-0"	6'-10"	3'-10"	9'-8"	5'-0"
30"	-	-	9'-3"	6'-0"	17'-0"	6'-0"

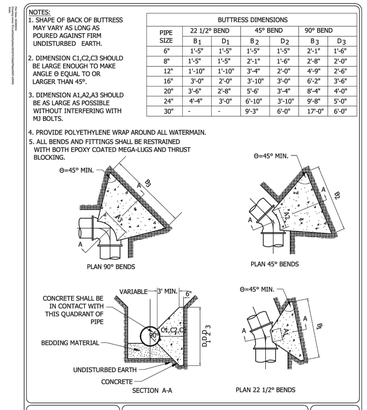

Stantec — 3535 Vadnais Ctr N, St Paul, MN 55110, www.stantec.com

CONCRETE THRUST BLOCKING
CHASKA, MINNESOTA

LAST REVISION: APRIL 2005
PLATE NO. WAT-4

NOTES: CORE BLUE BOLTS REQUIRED FOR ALL MECHANICAL FITTINGS. ANTI-CORROSIVE COATING REQUIRED ON ALL BOLTS AND TIE ROD ASSEMBLIES.

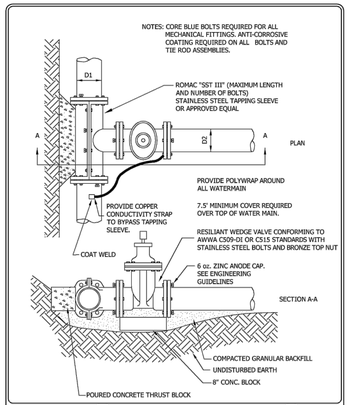

Stantec — 3535 Vadnais Ctr N, St Paul, MN 55110, www.stantec.com

WATER MAIN WET TAP
CHASKA, MINNESOTA

LAST REVISION: MARCH 2019
PLATE NO. WAT-5

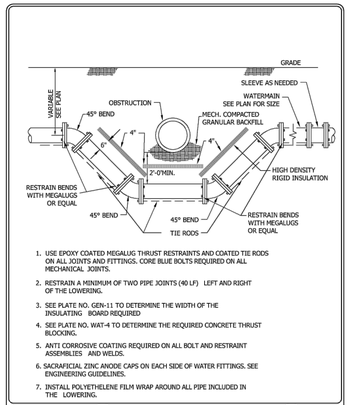

1. USE EPOXY COATED MEGALUG THRUST RESTRAINTS AND COATED TIE RODS ON ALL JOINTS AND FITTINGS. CORE BLUE BOLTS REQUIRED ON ALL MECHANICAL JOINTS.
2. RESTRAIN A MINIMUM OF TWO PIPE JOINTS (40 LF) LEFT AND RIGHT OF THE LOWERING.
3. SEE PLATE NO. GEN-11 TO DETERMINE THE WIDTH OF THE INSULATING BOARD REQUIRED
4. SEE PLATE NO. WAT-4 TO DETERMINE THE REQUIRED CONCRETE THRUST BLOCKING.
5. ANTI CORROSIVE COATING REQUIRED ON ALL BOLT AND RESTRAINT ASSEMBLIES AND WELDS.
6. SACRAFICIAL ZINC ANODE CAPS ON EACH SIDE OF WATER FITTINGS. SEE ENGINEERING GUIDELINES.
7. INSTALL POLYETHELENE FILM WRAP AROUND ALL PIPE INCLUDED IN THE LOWERING.

Stantec — 3535 Vadnais Ctr N, St Paul, MN 55110, www.stantec.com

WATER MAIN LOWERING WITH INSULATION DETAIL
CHASKA, MINNESOTA

LAST REVISION: MARCH 2019
PLATE NO. WAT-6

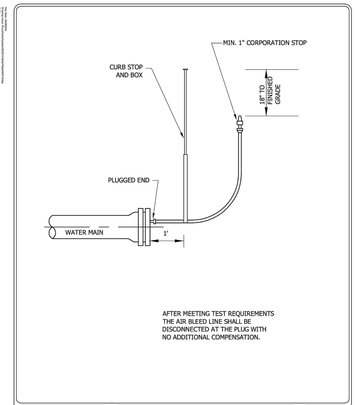

AFTER MEETING TEST REQUIREMENTS THE AIR BLEED LINE SHALL BE DISCONNECTED AT THE PLUG WITH NO ADDITIONAL COMPENSATION.

Stantec — 3535 Vadnais Ctr N, St Paul, MN 55110, www.stantec.com

TYPICAL AIR BLEED INSTALLATION
CHASKA, MINNESOTA

LAST REVISION: MARCH 2008
PLATE NO. WAT-8

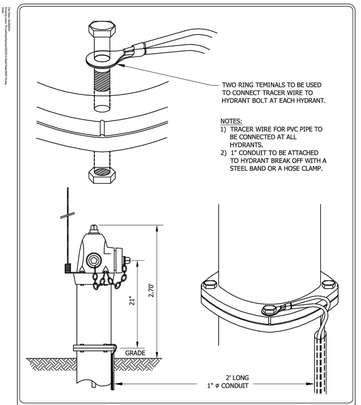

Stantec — 3535 Vadnais Ctr N, St Paul, MN 55110, www.stantec.com

TRACER WIRE FOR PVC WATER MAIN
CHASKA, MN

LAST REVISION: APRIL 2008
PLATE NO. WAT-10

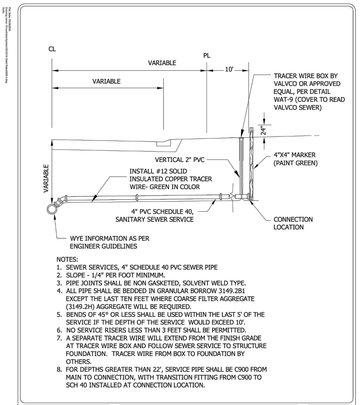

NOTES:
1. SEWER SERVICES, 4" SCHEDULE 40 PVC SEWER PIPE
2. SLOPE - 1/4" PER FOOT MINIMUM.
3. PIPE JOINTS SHALL BE NON GASKETED, SOLVENT WELD TYPE.
4. ALL PIPE SHALL BE BEDDED IN GRANULAR BORROW 3149.2B1 EXCEPT THE LAST TEN FEET WHERE COARSE FILTER AGGREGATE (3149.2H) AGGREGATE WILL BE REQUIRED.
5. BENDS OF 45° OR LESS SHALL BE USED WITHIN THE LAST 5' OF THE SERVICE IF THE DEPTH OF THE SERVICE WOULD EXCEED 10'.
6. NO SERVICE RISERS LESS THAN 3 FEET SHALL BE PERMITTED.
7. A SEPARATE TRACER WIRE WILL EXTEND FROM THE FINISH GRADE AT TRACER WIRE BOX AND FOLLOW SEWER SERVICE TO STRUCTURE FOUNDATION. TRACER WIRE FROM BOX TO FOUNDATION BY OTHERS.
8. FOR DEPTHS GREATER THAN 22', SERVICE PIPE SHALL BE C900 FROM MAIN TO CONNECTION, WITH TRANSITION FITTING FROM C900 TO SCH 40 INSTALLED AT CONNECTION LOCATION.

Stantec — 3535 Vadnais Ctr N, St Paul, MN 55110, www.stantec.com

SEWER SERVICE CONNECTION
CHASKA, MINNESOTA

LAST REVISION: APRIL 2016
PLATE NO. SER-1

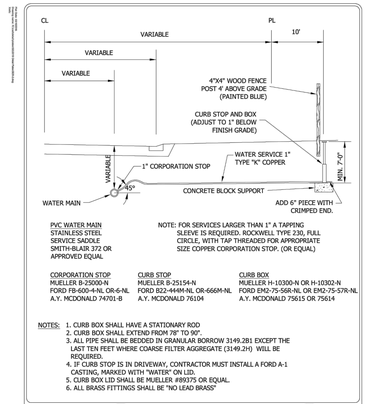

PVC WATER MAIN STAINLESS STEEL SERVICE SADDLE SMITH-BLAIR 372 OR APPROVED EQUAL

NOTE: FOR SERVICES LARGER THAN 1" A TAPPING SLEEVE IS REQUIRED. ROCKWELL TYPE 230, FULL CIRCLE, WITH TAP THREADED FOR APPROPRIATE SIZE COPPER CORPORATION STOP. (OR EQUAL)

CORPORATION STOP	CURB STOP	CURB BOX
MUELLER B-25000-N	MUELLER B-25154-N	MUELLER H-10300-N OR H-10302-N
FORD FB-600-4-NL OR-6-NL	FORD B22-444M-NL OR-666M-NL	FORD EM2-75-S6R-NL OR EM2-75-S7R-NL
A.Y. MCDONALD 74701-B	A.Y. MCDONALD 76104	A.Y. MCDONALD 75615 OR 75614

NOTES:
1. CURB BOX SHALL HAVE A STATIONARY ROD
2. CURB BOX SHALL EXTEND FROM 78" TO 90".
3. ALL PIPE SHALL BE BEDDED IN GRANULAR BORROW 3149.2B1 EXCEPT THE LAST TEN FEET WHERE COARSE FILTER AGGREGATE (3149.2H) WILL BE REQUIRED.
4. IF CURB STOP IS IN DRIVEWAY, CONTRACTOR MUST INSTALL A FORD A-1 CASTING, MARKED WITH "WATER" ON LID.
5. CURB BOX LID SHALL BE MUELLER #89375 OR EQUAL.
6. ALL BRASS FITTINGS SHALL BE "NO LEAD BRASS"

Stantec — 3535 Vadnais Ctr N, St Paul, MN 55110, www.stantec.com

WATER SERVICE CONNECTION COPPER PIPE
CHASKA, MINNESOTA

LAST REVISION: MARCH 2016
PLATE NO. SER-2

ALLIANT
733 Marquette Avenue
Suite 700
Minneapolis, MN 55402
612.758.3080
www.alliant-inc.com

CLUB WEST 11TH ADDITION
CHASKA, MINNESOTA
CONSTRUCTION DOCUMENTS
DETAILS

I hereby certify that this plan, specification, or report was prepared by me or under my direct supervision and that I am a duly Licensed PROFESSIONAL ENGINEER under the laws of the State of MINNESOTA

DAVE NASH, PE
8/31/2022 — 21836
Date — License No.

QUALITY ASSURANCE/CONTROL

DATE	ISSUE
8/31/2022	CITY SUBMITTAL
11/29/2022	CITY RESUBMITTAL
12/28/2022	CITY RESUBMITTAL 1
1/11/2023	LOT 6 UPDATE 2
2/10/23	LOT 1 AND 6 UPDATE 3

PROJECT TEAM DATA
DESIGNED: DN
DRAWN: AA JP
PROJECT NO: 213-0121

5

Drawing name: X:\2013\130121\plan sheets\Final Plat\130121det.dwg Feb 10, 2023 - 10:53am

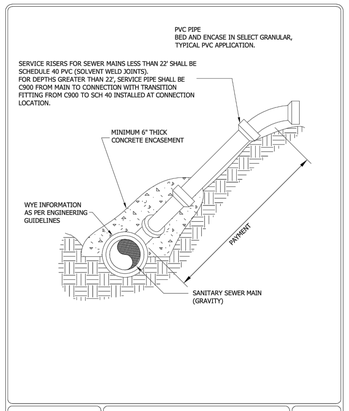

Stantec — SERVICE RISER — CHASKA, MINNESOTA — LAST REVISION: MARCH 2016 — PLATE NO. SER-3

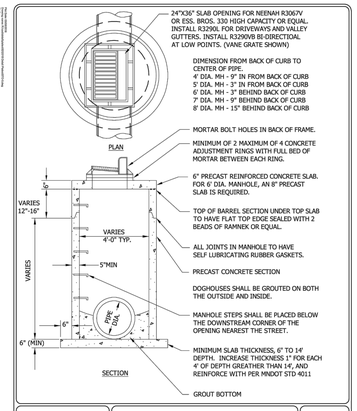

Stantec — TYPE II CATCHBASIN MANHOLE — CHASKA, MINNESOTA — LAST REVISION: MARCH 2018 — PLATE NO. STO-5

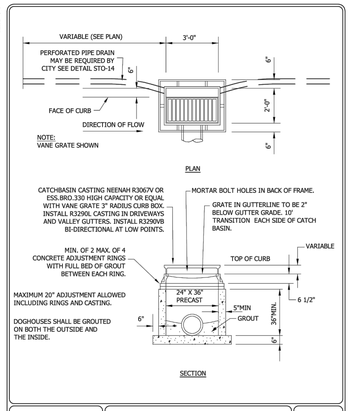

Stantec — TYPE II CATCHBASIN — CHASKA, MINNESOTA — LAST REVISION: MARCH 2018 — PLATE NO. STO-6

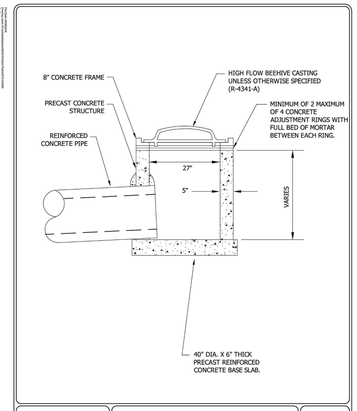

Stantec — PRECAST 27" SHALLOW DEPTH BEEHIVE — CHASKA, MINNESOTA — LAST REVISION: MARCH 2018 — PLATE NO. STO-9

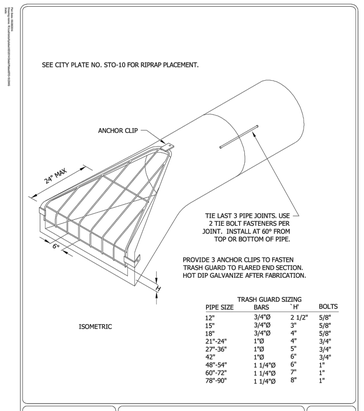

Stantec — FLARED END SECTION AND TRASH GUARD — CHASKA, MINNESOTA — LAST REVISION: FEB. 1995 — PLATE NO. STO-10

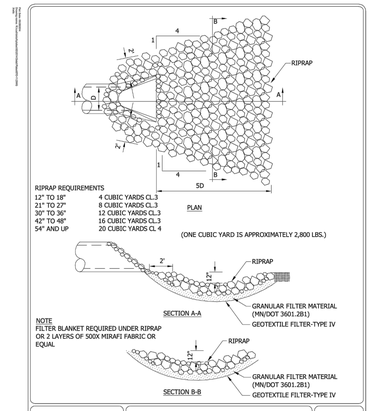

Stantec — RIPRAP AT OUTLETS — CHASKA, MINNESOTA — LAST REVISION: APRIL 2004 — PLATE NO. STO-11

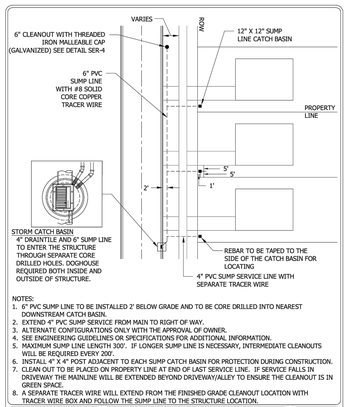

Stantec — PVC SUMP LINE BEHIND CURB — CHASKA, MINNESOTA — LAST REVISION: MAY 2016 — PLATE NO. STO-15

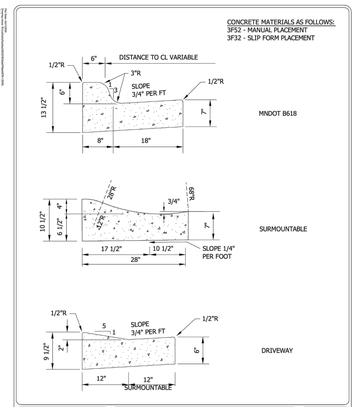

Stantec — CURB AND GUTTER — CHASKA, MINNESOTA — LAST REVISION: APRIL 2016 — PLATE NO. STR-1

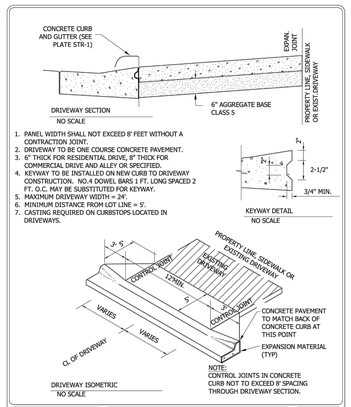

Stantec — CONCRETE DRIVEWAY APRON — CHASKA, MINNESOTA — LAST REVISION: APRIL 2016 — PLATE NO. STR-2

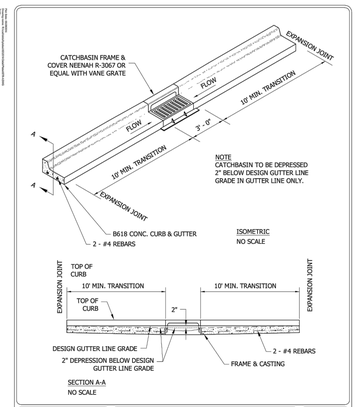

Stantec — B618 CURB & GUTTER CONSTRUCTION AT CATCHBASIN — CHASKA, MINNESOTA — LAST REVISION: MARCH 2008 — PLATE NO. STR-4

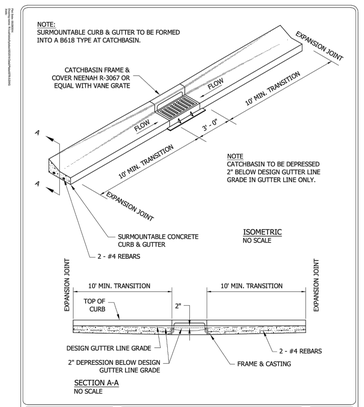

Stantec — SURMOUNTABLE CURB & GUTTER CONSTRUCTION AT CATCHBASIN — CHASKA, MINNESOTA — LAST REVISION: MARCH 2008 — PLATE NO. STR-5

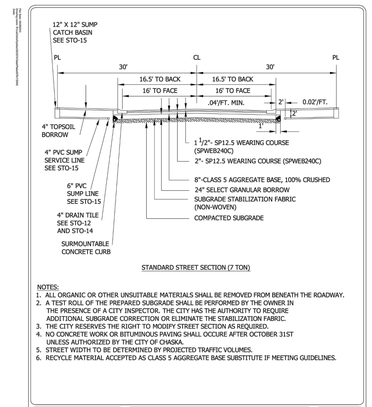

Stantec — TYPICAL SECTIONS FOR RESIDENTIAL STREETS 7 TON SECTION — CHASKA, MINNESOTA — LAST REVISION: JUNE 2012 — PLATE NO. STR-7

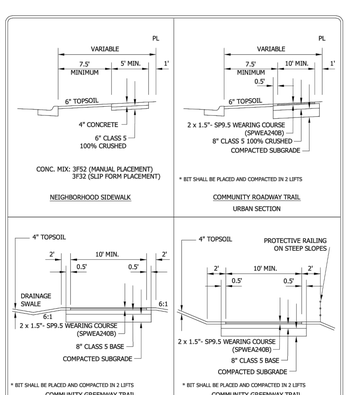

Stantec — TYPICAL PLACEMENT AND SECTION FOR WALKS AND TRAILS — CHASKA, MINNESOTA — LAST REVISION: APRIL 2016 — PLATE NO. STR-9

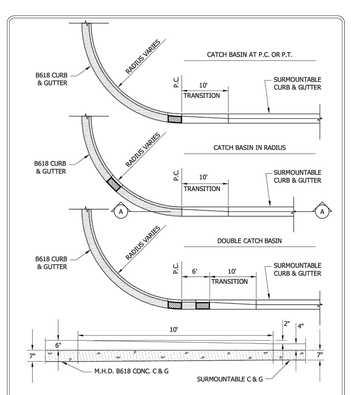

Stantec — CONCRETE CURB & GUTTER TRANSITION — CHASKA, MINNESOTA — LAST REVISION: OCT. 1989 — PLATE NO. STR-10

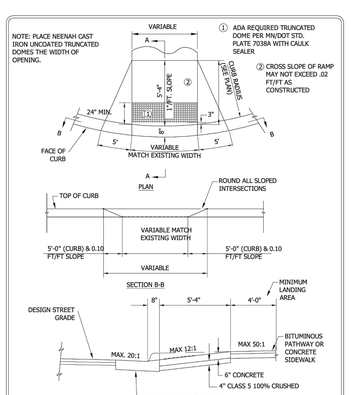

Stantec — PEDESTRIAN CURB RAMP FOR PATHWAY/SIDEWALK — CHASKA, MINNESOTA — LAST REVISION: APRIL 2011 — PLATE NO. STR-11

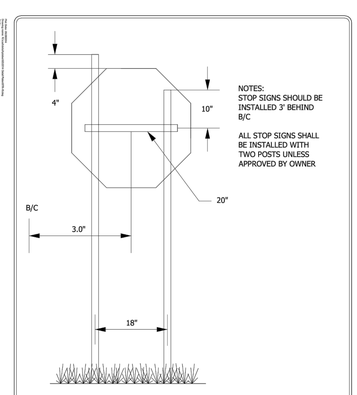

Stantec — STOP SIGN INSTALLATION DETAIL — CHASKA, MINNESOTA — LAST REVISION: JUNE 2012 — PLATE NO. STR-15

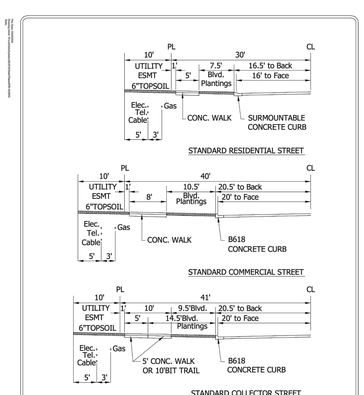

Stantec — TYPICAL STREET COMPONENTS/DIMENSIONS RESIDENTIAL, COMMERCIAL & COLLECTOR — CHASKA, MINNESOTA — LAST REVISION: APRIL 2016 — PLATE NO. STR-16

ALLIANT
733 Marquette Avenue
Suite 700
Minneapolis, MN 55402
612.758.3080
www.alliant-inc.com

CLUB WEST 11TH ADDITION
CHASKA, MINNESOTA
CONSTRUCTION DOCUMENTS
DETAILS

I hereby certify that this plan, specification, or report was prepared by me or under my direct supervision and that I am a duly Licensed PROFESSIONAL ENGINEER under the laws of the State of MINNESOTA

DAVE NASH, PE

8/31/2022 — 21836
Date — License No.

QUALITY ASSURANCE/CONTROL

BY	DATE

DATE	ISSUE
8/31/2022	CITY SUBMITTAL
11/29/2022	CITY RESUBMITTAL
12/28/2022	CITY RESUBMITTAL 1
1/11/2023	LOT 6 UPDATE 2
2/10/23	LOT 1 AND 6 UPDATE 3

PROJECT TEAM DATA

DESIGNED: DN
DRAWN: AA JP
PROJECT NO: 213-0121

6

SHEET 6 OF 18

Drawing name: X:\2013\130121\plan sheets\Final Plat\130121det.dwg Feb 10, 2023 - 10:53am

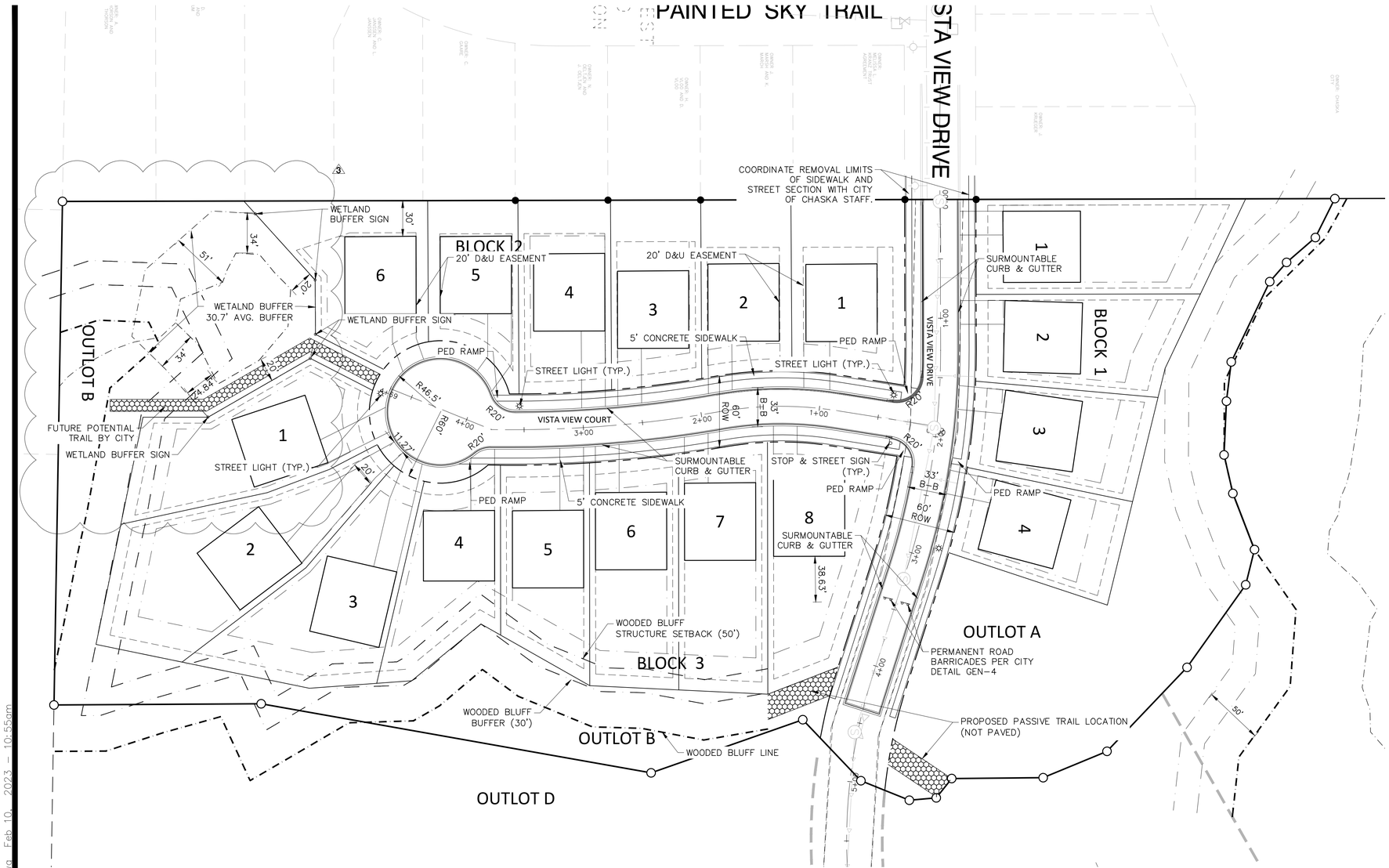

SITE DATA:

SITE DATA:

SITE AREA (EXCLUDES OUTLOT B)	= 10.30 AC
TOTAL SINGLE FAMILY LOTS	= 18 (75' WIDE LOT MIN)
DENSITY	= 1.75 UNITS/ AC

LOT DATA:	PROPOSED
LOT AREA	=VARIES
LOT WIDTH	=VARIES– 75' (MIN)
LOT DEPTH	= 118' (MIN)
FRONT SETBACK	= 23'
SIDE SETBACK	= 10' & 5' = 20' CORNER ON ROW
REAR SETBACK	= 30'

DESIGN DATA:	
ROW	= 60'
PAVEMENT WIDTH (MIN.)	= 33' B–B
WOODED SLOPE SETBACK	= 30' BUFFER + 20' STRUCTURE

SITE PLAN NOTES:

1. PRIOR TO STARTING CONSTRUCTION, THE CONTRACTOR SHALL BE RESPONSIBLE TO MAKE SURE THAT ALL REQUIRED PERMITS AND APPROVALS HAVE BEEN OBTAINED. NO CONSTRUCTION OR FABRICATION SHALL BEGIN UNTIL THE CONTRACTOR HAS RECEIVED AND THOROUGHLY REVIEWED ALL PLANS AND OTHER DOCUMENTS APPROVED BY ALL OF THE PERMITTING AUTHORITIES.
2. CONTRACTOR SHALL FIELD VERIFY THE LOCATIONS AND ELEVATIONS OF EXISTING UTILITIES AND TOPOGRAPHIC FEATURES, SUCH AS EXISTING GUTTER GRADES AT THE PROPOSED DRIVEWAYS, PRIOR TO THE START OF SITE GRADING. THE CONTRACTOR SHALL IMMEDIATELY NOTIFY THE ENGINEER OF ANY DISCREPANCIES OF VARIATIONS FROM THE PLANS.
3. ALL WORK SHALL BE PERFORMED IN ACCORDANCE WITH THESE PLANS AND SPECIFICATIONS AND THE REQUIREMENTS AND STANDARDS OF THE LOCAL GOVERNING AUTHORITY.
4. CONTRACTOR IS RESPONSIBLE FOR DEMOLITION AND REMOVAL OF ALL EXISTING STRUCTURES WHICH INTERFERE WITH NEW WORK AS SHOWN.
5. CONCRETE SIDEWALK AND CURB & GUTTER SHALL BE REMOVED TO NEAREST CONSTRUCTION JOINT OUTSIDE THE REMOVAL LIMITS.
6. ALL DIMENSIONS, GRADES, EXISTING AND PROPOSED INFORMATION SHOWN ON THE PLANS SHALL BE FIELD VERIFIED BY THE CONTRACTOR PRIOR TO CONSTRUCTION. CONTRACTOR SHALL NOTIFY THE CONSTRUCTION MANAGER IF ANY DISCREPANCIES EXIST PRIOR TO PROCEEDING WITH CONSTRUCTION FOR NECESSARY PLAN OR GRADE CHANGES. NO EXTRA COMPENSATION SHALL BE PAID TO THE CONTRACTOR FOR WORK HAVING TO BE REDONE DUE TO INFORMATION SHOWN INCORRECTLY ON THESE PLANS IF SUCH NOTIFICATION HAS NOT BEEN GIVEN.
7. DIMENSIONS SHOWN ARE TO BACK OF CURB, CENTER OF STRUCTURE, EDGE OF SIDEWALK OR EXTERIOR OF BUILDING.
8. PROTECT EXISTING CONCRETE SIDEWALKS DURING ALL PHASES OF CONSTRUCTION. CONTRACTOR TO REPLACE ANY CRACKED OR BROKEN PANELS CAUSED BY SITE CONSTRUCTION.
9. CONTRACTOR IS RESPONSIBLE FOR THE REMOVAL & DISPOSAL OF THE EXISTING BITUMINOUS. BITUMINOUS SHALL BE SAW CUT OR JACK HAMMERED FOR STRAIGHT EDGES. TACK SHALL BE USED ON BITUMINOUS EDGE PRIOR TO PATCHING. MATCH EXISTING GRADES.
10. CONTRACTOR SHALL PROTECT ADJOINING PROPERTIES & STRUCTURES FROM HAZARDS ASSOCIATED WITH HIS CONSTRUCTION ACTIVITIES & SHALL BE RESPONSIBLE FOR ALL DAMAGES TO PROPERTIES & STRUCTURES THAT OCCUR AS A RESULT OF THESE ACTIVITIES.
11. CONTRACTOR SHALL NOT IMPEDE EXISTING TRAFFIC CIRCULATION TO ADJACENT BUSINESSES OR HOMES. PROVIDE TRAFFIC CONTROL DURING CONSTRUCTION PER MNDOT STANDARDS.
12. CONTRACTOR SHALL PERFORM SWEEPING ON PRIVATE PARKING AREAS AND PUBLIC STREETS AT LEAST ONCE A WEEK, ONCE A DAY IF NEEDED.
13. CONTRACTOR SHALL BE HELD FULLY RESPONSIBLE TO PREVENT AND ELIMINATE ANY DUST NUISANCE OCCASIONED BY AND DURING CONSTRUCTION, UNTIL THE PROJECT HAS BEEN COMPLETED AND HANDED OVER.
14. ALL WORK WITHIN THE R.O.W. STALL COMPLY WITH THE CITY ENGINEERING DESIGN STANDARDS.
15. ALL CURB AND GUTTER TO BE SURMOUNTABLE CURB UNLESS NOTED OTHERWISE.
16. RETAINING WALLS, WHERE HEIGHT IS MORE THAN 30" FROM FINISHED GRADE, SHALL HAVE A 42" GUARDRAIL OR FENCE ATOP THE WALL UNLESS OTHERWISE NOTED ON PLANS.
17. CITY OF CHASKA WILL INSTALL STOP SIGNS AND STREET NAME SIGNES.
18. COORDINATE ANY REMOVAL IMPACTS TO PRIVATE IRRIGATION, ETC. WITH ADJACENT RESIDENTS ON VISTA VIEW DRIVE.
19. COORDINATE CONNECTION TO EXISTING NEIGHBORHOOD STREETS WITH CITY OF CHASKA.

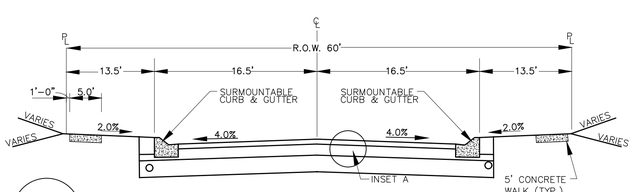

TYPICAL ROAD SECTION

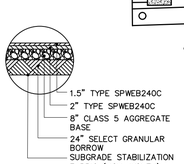

INSET A

NOT TO SCALE

LOT DETAIL

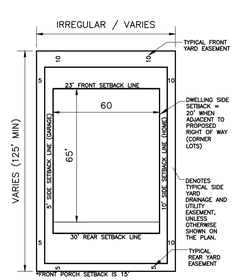

TYPICAL HERITAGE LOT DETAIL

LEGEND:

- BLUFF LINE/ BUFFER SETBACK
- EASEMENT LINE
- BUILDING SETBACK
- PROPERTY LINE
- LOT LINE
- ROW
- WETLAND BUFFER
  11,959 SF/ 389 LF= 30.7' AVG BUFFER
- STREET LIGHT
- STOP AND STREET SIGN
- PROPOSED PASSIVE TRAIL LOCATION (NOT PAVED)

N

0 25 50 100
SCALE IN FEET

ALLIANT
733 Marquette Avenue
Suite 700
Minneapolis, MN 55402
612.758.3080
www.alliant-inc.com

CLUB WEST 11TH ADDITION
CHASKA, MINNESOTA
CONSTRUCTION DOCUMENTS
SITE PLAN

I hereby certify that this plan, specification, or report was prepared by me or under my direct supervision and that I am a duly Licensed PROFESSIONAL ENGINEER under the laws of the State of MINNESOTA

DAVE NASH, PE

8/31/2022 — 21836
Date — License No.

QUALITY ASSURANCE/CONTROL

BY	DATE

DATE	ISSUE
8/31/2022	CITY SUBMITTAL
11/29/2022	CITY RESUBMITTAL
12/28/2022	CITY RESUBMITTAL 1
1/11/2023	LOT 6 UPDATE 2
2/10/23	LOT 1 AND 6 UPDATE 3

PROJECT TEAM DATA

DESIGNED:	DN
DRAWN:	AA JP
PROJECT NO:	213-0121

7

SHEET 7 OF 18

Drawing name: X:\2013\130121\plan sheets\Final Plat\130121site.dwg Feb 10, 2023 - 10:55am

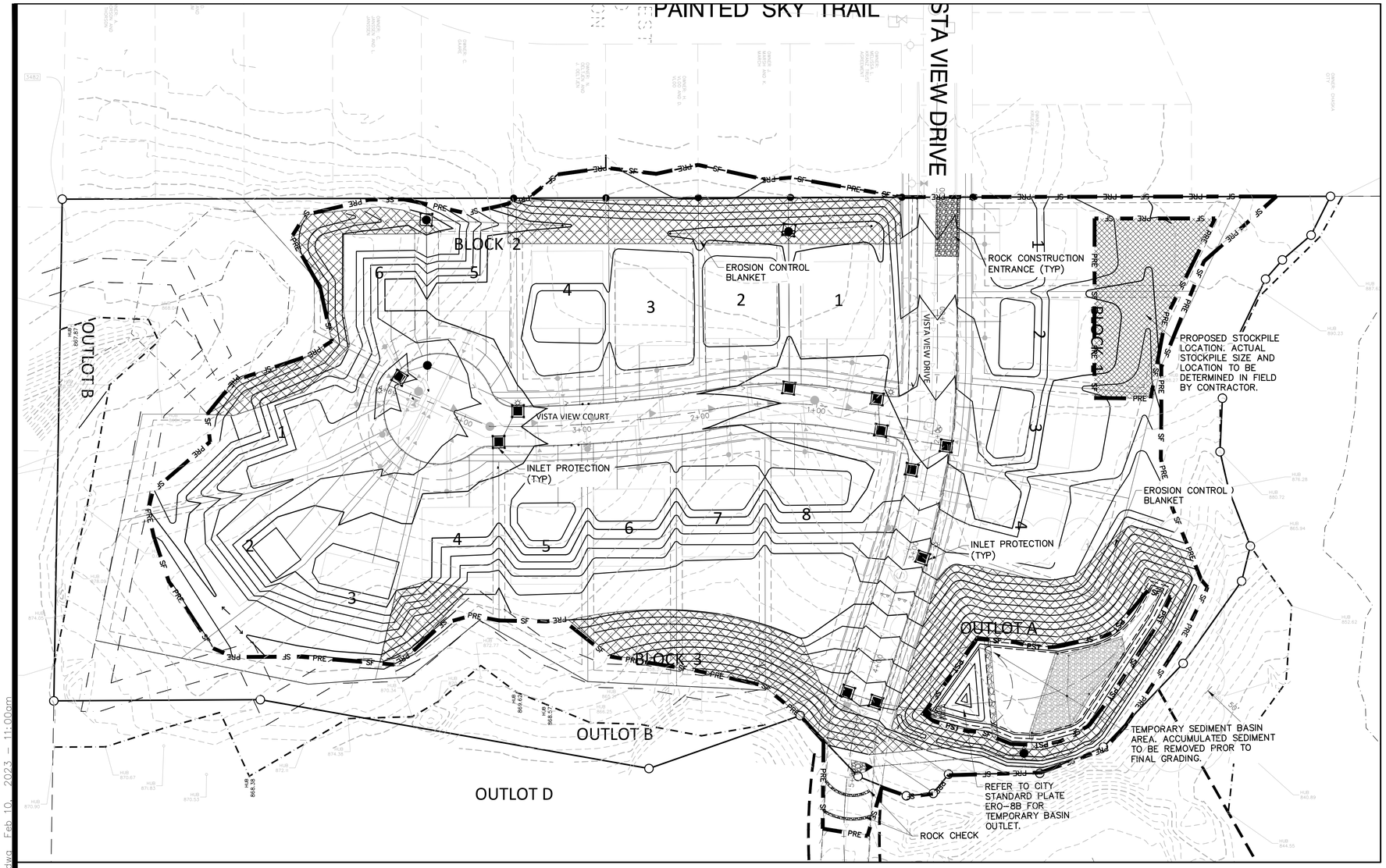

LEGEND:

- PRE — SF — DENOTES PRE-GRADING SEDIMENT BARRIER
- PST — SF — DENOTES POST-GRADING SEDIMENT BARRIER
- 980 — DENOTES EXISTING CONTOURS
- 980 — DENOTES PROPOSED CONTOURS
- DENOTES EXISTING STORM SEWER
- DENOTES PROPOSED STORM SEWER
- DENOTES TREE PROTECTION LIMITS
- DENOTES BIO-ROLL EROSION CHECKS
- E.O.F. — DENOTES EMERGENCY OVERFLOW ELEVATION
- ROCK CONSTRUCTION ENTRANCE
- DENOTES STABILIZATION BMP (EROSION CONTROL BLANKET) (3:1 AND STEEPER SLOPES)
- DENOTES TEMPORARY SEDIMENTATION BASIN

NOTE TO CONTRACTOR:

THE OWNER AND THE GENERAL CONTRACTOR ARE THE RESPONSIBLE PARTIES TO IMPLEMENT THE NPDES PERMIT. THE MASS GRADING CONTRACTOR IS RESPONSIBLE FOR INSTALLATION OF ALL EROSION AND SEDIMENT CONTROL BEST MANAGEMENT PRACTICES (BMPS) AS SHOWN IN THE MASS GRADING SWPPP (EXCEPT FOR POST GRADE BMPS NEEDED AFTER UTILITY CONSTRUCTION ACTIVITY). THE BMPS ARE TO BE INSTALLED AT A MINIMUM AS SHOWN IN THE PLAN, IF CONDITIONS ARISE, ADDITIONAL BMP SUPPLEMENTATION TO PREVENT SITE EROSION OR SEDIMENT TRANSPORT MAY BE NECESSARY. THE MASS GRADING CONTRACTOR IS RESPONSIBLE FOR ALL BMPS REQUIRED TO COMPLETE THE MASS GRADING ACTIVITIES AND SUBSEQUENT TEMPORARY SOIL STABILIZATION NECESSARY TO PREPARE SITE FOR STREET AND UTILITY CONSTRUCTION AND HOME BUILDING. AT THE COMPLETION OF MASS GRADING WORK AND SATISFACTORY SITE SOIL STABILIZATION, THE DEVELOPER AND MASS GRADING CONTRACTOR SHALL COORDINATE THE TRANSFER OF NPDES PERMIT RESPONSIBILITIES TO THE STREET AND UTILITY CONTRACTOR AND THE CITY.

THE STREET AND UTILITY CONTRACTOR AND CITY WILL THEN ASSUME THE RESPONSIBILITY TO PROVIDE INSPECTION AND MAINTENANCE OF ANY IN-PLACE BMPS AS WELL AS INSTALL THE ADDITIONAL BMPS REQUIRED IN THE STREET AND UTILITY CONSTRUCTION DOCUMENT SWPPP. UPON COMPLETION OF STREET AND UTILITY CONSTRUCTION, THE STREET AND UTILITY CONTRACTOR SHALL REMOVE ANY BMPS INSTALLED DURING THE STREET AND UTILITY PHASE THAT ARE NO LONGER REQUIRED AND COORDINATE THE TRANSFER OF NPDES PERMIT RESPONSIBILITIES BACK TO THE DEVELOPER OR TERMINATE THE PORTION OF THE NPDES PERMIT TRANSFERRED TO THE CITY AND THEIR CONTRACTOR.

CONSTRUCTION SEQUENCING

MASS GRADING PHASE:

1. INSTALL STABILIZED CONSTRUCTION ENTRANCES.
2. PREPARE TEMPORARY PARKING AND STORAGE AREA.
3. INSTALL THE PRE-GRADING SILT FENCES AND INLET PROTECTION BMPS ON THE SITE.
4. CONSTRUCT ALL PRE-GRADING EROSION AND SEDIMENTATION CONTROL BMPs.
5. COMPLETE MASS GRADING AND INSTALL TEMPORARY AND PERMANENT SEEDING AND PLANTING.
6. CONSTRUCT POST-GRADING SILT FENCE ON THE SITE.

STREET & UTILITY PHASE:

1. INSTALL UTILITIES, UNDERDRAINS, STORM SEWERS, CURBS AND GUTTERS.
2. INSTALL RIP RAP AROUND OUTLET STRUCTURES.
3. INSTALL INLET PROTECTION AROUND ALL STORM SEWER STRUCTURES.
4. PREPARE SITE FOR PAVING.
5. PAVE SITE.
6. INSTALL PRIVATE UTILITIES.
7. INSTALL INLET PROTECTION DEVICES.
8. INSTALL POST STREET AND UTILITY SILT FENCE.
9. REMOVE ALL TEMPORARY EROSION AND SEDIMENT CONTROL DEVICES (ONLY IF SITE IS STABILIZED), IF REQUIRED BY THE CONTRACT

EROSION CONTROL RESPONSIBLE PARTY:

TRADITION DEVELOPMENT

NOTE:

REFER TO SHEET 9 FOR EROSION CONTROL DETAILS.

ACTIVE SWPPP LEGEND / SCHEDULE

CONSTRUCTION SEQUENCE	APR	MAY	JUN	JUL	AUG	SEP	OCT	NOV	DEC	JAN	FEB	MAR	APR
MULCH BERM													
FIBER ROLLS / MULCH SOCKS													
SILT FENCE													
TEMPORARY MULCH COVER													
TEMPORARY HYDROMULCH													
EROSION CONTROL BLANKET													
ROCK DRIVEWAY / ROCK PADS													
INLET PROTECTION DEVICES													
PAVEMENT (DRIVEWAY/ROADS)													
SOD													
STOCKPILES													

NOTE: CONTRACTOR, GENERAL CONTRACTOR OR SWPPP INSPECTOR TO COMPLETE TABLE AS GRADING PROGRESSES

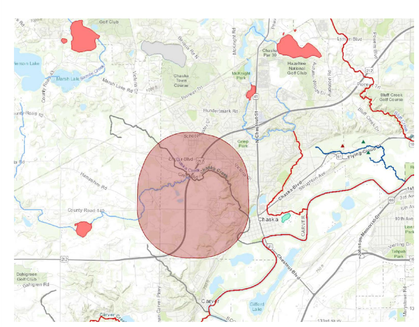

VICINITY MAP

SWPPP BMP QUANTITIES (PER PLAN):

1.	STANDARD POST SILT FENCE	3,236 LF
2.	SILT FENCE – POST GRADING	539 LF
3.	INLET PROTECTION	13 EA
4.	EROSION CONTROL BLANKET	53,612 SF
5.	ROCK CHECK	2 EA

*CHASKA CREEK ULTIMATE DISCHARGE WATERWAY

N

0 25 50 100
SCALE IN FEET

ALLIANT
733 Marquette Avenue
Suite 700
Minneapolis, MN 55402
612.758.3080
www.alliant-inc.com

CLUB WEST 11TH ADDITION
CHASKA, MINNESOTA
CONSTRUCTION DOCUMENTS
EROSION AND SEDIMENT CONTROL PLAN

I hereby certify that this plan, specification, or report was prepared by me or under my direct supervision and that I am a duly Licensed PROFESSIONAL ENGINEER under the laws of the State of MINNESOTA

DAVE NASH, PE
8/31/2022 — 21836
Date — License No.

QUALITY ASSURANCE/CONTROL

BY	DATE

DATE	ISSUE
8/31/2022	CITY SUBMITTAL
11/29/2022	CITY RESUBMITTAL
12/28/2022	CITY RESUBMITTAL 1
1/11/2023	LOT 6 UPDATE 2
2/10/23	LOT 1 AND 6 UPDATE 3

PROJECT TEAM DATA
DESIGNED: DN
DRAWN: AA JP
PROJECT NO: 213-0121

8

SHEET 8 OF 18

Drawing name: X:\2013\130121\plan sheets\Final Plat\130121esp.dwg Feb 10, 2023 - 11:00am

EROSION CONTROL GENERAL NOTES:

1. NO LAND DISTURBING ACTIVITY SHALL OCCUR UNTIL A GRADING PERMIT HAS BEEN ISSUED FROM THE CITY OF CHASKA AND THE WATERSHED DISTRICT.

2. BEST MANAGEMENT PRACTICES (BMP'S) REFER TO EROSION AND SEDIMENT CONTROL PRACTICES DEFINED IN THE MPCA PROTECTING WATER QUALITY IN URBAN AREAS AND THE MINNESOTA CONSTRUCTION SITE EROSION AND SEDIMENT CONTROL PLANNING HANDBOOK.

3. ALL BMP'S SELECTED SHALL BE APPROPRIATE FOR THE TIME OF YEAR, SITE CONDITIONS, AND ESTIMATED DURATION OF USE.

4. THE SWPPP MAY BE REVISED AT ANYTIME OF THE PROJECT TIMELINE AS LONG AS THE BMP'S ARE SELECTED, INSTALLED AND MAINTAINED IN ACCORDANCE WITH THE MANUFACTURER SPECIFICATION AND ACCEPTED ENGINEERING PRACTICES (SECTION 7 OF MPCA NPDES PERMIT).

- ALL SWPPP CHANGES MUST BE DONE BY A QUALIFIED INDIVIDUAL (21.2A OR 21.2B OF MPCA NPDES PERMIT).

5. A COPY OF THESE PLANS MUST BE ON THE JOB SITE WHENEVER CONSTRUCTION IS IN PROGRESS.

6. THE BOUNDARIES OF THE LAND DISTURBANCE LIMITS SHOWN ON THE PLANS SHALL BE CLEARLY FLAGGED IN THE FIELD PRIOR TO CONSTRUCTION. NO DISTURBANCE BEYOND THE DISTURBED LIMITS.

7. WHEREVER POSSIBLE, PRESERVE THE EXISTING TREES, GRASS AND OTHER VEGETATIVE COVER TO HELP FILTER RUNOFF.

8. ESTABLISH A PERMANENT VEGETATIVE COVER ON ALL EXPOSED SOILS WHERE LAND IS COMING OUT OF AGRICULTURAL PRODUCTION. PLANT AS SOON AS POSSIBLE TO ESTABLISH DENSE GRASS FILTER PRIOR TO CONSTRUCTION AND TO MINIMIZE WEED GROWTH.

9. ALL TREES NOT LISTED FOR REMOVAL SHALL BE PROTECTED. DO NOT OPERATE EQUIPMENT WITHIN THE DRIPLINE, ROOT ZONES OR WITHIN TREE PROTECTION FENCE AREAS.

10. ALL EROSION AND SEDIMENT CONTROL FACILITIES (BMP'S) SHALL BE INSTALLED AND IN OPERATION PRIOR TO LAND DISTURBANCE ACTIVITIES AND THEY SHALL BE SATISFACTORILY MAINTAINED UNTIL CONSTRUCTION IS COMPLETED AND THE POTENTIAL FOR EROSION HAS PASSED.

11. SILT FENCE IS REQUIRED AT DOWN GRADIENT PERIMETER OF DISTURBED AREAS AND STOCKPILES. PROTECT WETLANDS, WATERCOURSES AND ADJACENT PROPERTIES FROM SEDIMENTATION AND STORMWATER RUNOFF.

12. THE BMP'S SHOWN ON THE PLANS ARE THE MINIMUM REQUIREMENTS FOR THE ANTICIPATED SITE CONDITIONS. AS CONSTRUCTION PROGRESSES AND UNEXPECTED OR SEASONAL CONDITIONS DICTATE, THE PERMITTEE/CONTRACTOR SHALL ANTICIPATE THAT MORE BMP'S WILL BE NECESSARY TO ENSURE EROSION AND SEDIMENT CONTROL ON THE SITE. DURING THE COURSE OF CONSTRUCTION, IT IS THE RESPONSIBILITY OF THE PERMITTEE/CONTRACTOR TO ADDRESS ANY NEW CONDITIONS THAT MAY BE CREATED BY CONSTRUCTION ACTIVITIES AND/OR CLIMATIC EVENTS AND TO PROVIDE ADDITIONAL BMP'S OVER AND ABOVE THE MINIMUM REQUIREMENTS SHOWN ON THE PLANS, AS MAY BE NEEDED TO PROVIDE EFFECTIVE PROTECTION OF WATER AND SOIL RESOURCES.

13. THE BMP'S SHALL BE INSPECTED DAILY BY THE PERMITTEE/CONTRACTOR AND MAINTAINED AS NECESSARY TO ENSURE THEIR CONTINUED FUNCTIONING. SILT FENCES CLEANED OR REPLACED AT SEDIMENT BUILDUP OF 1/2 OF THE FENCE HEIGHT.

14. LAND DISTURBING ACTIVITIES SHALL OCCUR IN INCREMENTS OF WORKABLE SIZE SUCH THAT ADEQUATE BMP CONTROL CAN BE PROVIDED THROUGHOUT ALL PHASES OF CONSTRUCTION. THE SMALLEST PRACTICAL AREA SHALL BE EXPOSED OR OTHERWISE DISTURBED AT ANY ONE TIME.

15. OPERATE TRACK EQUIPMENT (DOZER) UP AND DOWN EXPOSED SOIL SLOPES ON FINAL PASS, LEAVING TRACK GROOVES PERPENDICULAR TO THE SLOPE. DO NOT BACK-BLADE. LEAVE A SURFACE ROUGH TO MINIMIZE EROSION.

16. ALL AREAS DISTURBED BY CONSTRUCTION SHALL BE STABILIZED FROM EROSION WITHIN 7 DAYS OF SUBSTANTIAL COMPLETION OF GRADING IN THAT AREA. TEMPORARY SEED AND MULCH SHALL COVER ALL EXPOSED SOILS IF GRADING COMPLETION IS DELAYED LONGER THAN 7 DAYS. PERMANENT SEED AND MULCH OR SOD IS REQUIRED WITHIN 3 DAYS OF COMPLETION OF FINAL GRADING.

17. GENERAL TEMPORARY SEED SHALL BE MNDOT MIX 22-112 @ 100 LBS. PER ACRE OR APPROVED EQUAL. PERMANENT SEED SHALL BE MNDOT MIX 25-151 @ 120 LBS. PER ACRE OR APPROVED EQUAL. (PLANTING DATES PER SPEC 2575) MULCH SHALL BE MNDOT TYPE 1 (CLEAN OAT STRAW) @ 2 TONS PER ACRE AND DISK ANCHORED IN PLACE OR APPROVED EQUAL. FERTILIZER SHALL BE 80-80-80 NPK PER ACRE (UNLESS P RESTRICTIONS APPLY) AND INCORPORATED INTO THE SEED BED.

18. POND, BASIN AND WETLAND AREAS SHALL BE SEEDED IN ACCORDANCE WITH LANDSCAPE PLAN.

19. ALL TEMPORARY EROSION AND SEDIMENT CONTROL MEASURES SHALL BE PROPERLY DISPOSED OF WITHIN THIRTY (30) DAYS AFTER FINAL SITE STABILIZATION IS ACHIEVED OR AFTER THE TEMPORARY MEASURES ARE NO LONGER NEEDED.

20. AN ALTERNATE EROSION & SEDIMENT CONTROL PLAN SHALL BE REQUIRED FOR LAND DISTURBANCES ON EACH LOT AS PART OF ANY FUTURE BUILDING PERMIT FOR THE CONSTRUCTION OF STRUCTURES AND DRIVEWAYS.

21. TRADITION DEVELOPMENT TO BE THE PARTY RESPONSIBLE FOR RECORD DRAWINGS AND THE MAINTENANCE OF PROPOSED BMP'S. THE RESPONSIBILITY WILL BE TRANSFERRED TO THE CITY OF CHASKA FOLLOWING ACCEPTANCE OF THE BMPS.

EROSION CONTROL SCHEDULE:

1. PRIOR TO ANY CONSTRUCTION OR DEMOLITION, SILT FENCE AND FILTERS SHALL BE INSTALLED AS SHOWN TO INTERCEPT RUNOFF.

2. ALL EROSION CONTROL INSTALLATIONS SHALL REMAIN IN PLACE AND BE MAINTAINED IN GOOD CONDITION BY THE CONTRACTOR UNTIL THE SITE HAS BEEN RE-VEGETATED. CONTRACTOR MAY REMOVE NECESSARY SILT FENCING/FILTERS TO CONSTRUCT ROADWAYS, WHILE MAINTAINING ADEQUATE EROSION CONTROL IN ADJACENT AREA.

3. SUFFICIENT TOPSOIL SHALL BE STOCKPILED TO ALLOW FOR THE REPLACEMENT OF 6" OF TOPSOIL FOR DISTURBED AREAS TO BE RE-VEGETATED.

4. THE CONTRACTOR SHALL SCHEDULE SITE GRADING, UTILITY INSTALLATION AND PAVEMENT CONSTRUCTION SO THAT THE GENERAL SITE CAN BE MULCHED AND RE-SEEDED SOON AFTER DISTURBANCE. AREAS THAT WILL NOT BE SUBJECT TO CONSTRUCTION TRAFFIC SHALL BE SEEDED (MNDOT MIX 22-112 @ 100#/AC AND MULCHED OR SODDED WITHIN SEVEN (7) DAYS OF BEING DISTURBED.

5. CONTRACTOR SHALL INSTALL EROSION CONTROL DEVICES AS INDICATED ON THIS EROSION CONTROL PLAN AND ANY ADDITIONAL REQUIRED BASED ON MEANS, METHODS AND SEQUENCES OF CONSTRUCTION.

SEDIMENT CONTROL PRACTICES:

1. SEDIMENT CONTROL PRACTICES MUST MINIMIZE SEDIMENT FROM ENTERING SURFACE WATERS, INCLUDING CURB AND GUTTER SYSTEMS AND STORM SEWER INLETS.

2. SEDIMENT CONTROL PRACTICES MUST BE ESTABLISHED ON ALL DOWN GRADIENT PERMITERS BEFORE ANY UPGRADIENT LAND DISTURBING ACTIVITIES BEGIN. THESE PRACTICES SHALL REMAIN IN PLACE UNTIL PERMANENT COVER HAS BEEN ESTABLISHED.

3. THE TIMING OF THE INSTALLATION OF SEDIMENT CONTROL PRACTICES MAY BE ADJUSTED TO ACCOMMODATE SHORT-TERM ACTIVITIES SUCH AS CLEARING OR GRUBBING, OR PASSAGE OF VEHICLES. ANY SHORT-TERM ACTIVITY MUST BE COMPLETED AS QUICKLY AS POSSIBLE AND THE SEDIMENT CONTROL PRACTICES MUST BE INSTALLED IMMEDIATELY AFTER THE ACTIVITY IS COMPLETED. HOWEVER, SEDIMENT CONTROL PRACTICES MUST BE INSTALLED BEFORE THE NEXT PRECIPITATION EVENT EVEN IF THE ACTIVITY IS NOT COMPLETE.

4. ALL STORM DRAIN INLETS MUST BE PROTECTED BY APPROPRIATE BMPS DURING CONSTRUCTION UNTIL ALL SOURCES WITH POTENTIAL FOR DISCHARGING TO THE INLET HAVE BEEN STABILIZED.

5. TEMPORARY SOIL STOCKPILES MUST HAVE SILT FENCES OR OTHER EFFECTIVE SEDIMENT CONTROLS, AND CANNOT BE PLACED IN SURFACE WATERS, INCLUDING STORM WATER CONVEYANCES SUCH AS CURB AND GUTTER SYSTEMS, OR CONDUITS AND DITCHES.

6. SITE CONSTRUCTION ENTRANCES WILL BE AS SHOWN ON THE PLAN. ROCK CONSTRUCTION ENTRANCES SHALL BE INSTALLED AT EACH ENTRANCE.

PERMANENT COVER:

THE CONTRACTOR MUST ENSURE COMPLETE COVER OF THE SITE. THE CONTRACTOR MUST SUBMIT A NOTICE OF TERMINATION (NOT) WITHIN 30 DAYS AFTER PERMANENT COVER IS COMPLETE, OR ANOTHER OWNER/OPERATOR (PERMITTEE) HAS ASSUMED CONTROL OF ALL AREAS OF THE SITE THAT HAVE NOT UNDERGONE PERMANENT COVER. PERMANENT COVER CAN BE ACHIEVED IN THE FOLLOWING WAY:

ALL SOIL DISTURBING ACTIVITIES AT THE SITE HAVE BEEN COMPLETED AND ALL SOILS MUST BE STABILIZED BY A UNIFORM PERENNIAL VEGETATIVE COVER WITH A DENSITY OF 70 PERCENT OVER THE ENTIRE PERVIOUS SURFACE AREA, OR OTHER EQUIVALENTMEANS NECESSARY TO PREVENT SOIL FAILURE UNDER EROSIVE CONDITIONS AND;

A. ALL DRAINAGE DITCHES, CONSTRUCTED TO DRAIN WATER FROM THE SITE AFTER CONSTRUCTION IS COMPLETE, MUST BE STABILIZED TO PRECLUDE EROSION;
B. ALL TEMPORARY SYNTHETIC, AND STRUCTURAL EROSION PREVENTION AND SEDIMENT CONTROL BMPS (SUCH AS SILT FENCE) MUST BE REMOVED AS PART OF THE SITE PERMANENT COVER; AND
C. THE CONTRACTORS MUST CLEAN OUT ALL SEDIMENT FROM CONVEYANCES AND FROM TEMPORARY SEDIMENTATION BASINS THAT ARE TO BE USED AS PERMANENT WATER QUALITY MANAGEMENT BASINS. SEDIMENT MUST BE STABILIZED TO PREVENT IT FROM BEING WASHED BACK INTO THE BASIN, CONVEYANCES OR DRAINAGE WAYS DISCHARGING OFF-SITE OR TO SURFACE WATERS. THE CLEAN OUT OF PERMANENT BASINS MUST BE SUFFICIENT TO RETURN THE BASIN TO DESIGN CAPACITY.

EROSION AND SEDIMENT CONTROL MAINTENANCE PROGRAM:

1. INSPECT SILT FENCES IMMEDIATELY AFTER EACH RAINFALL AND AT LEAST DAILY DURING PROLONGED RAINFALL. IMMEDIATELY REPAIR FAILED OR FAILING SILT FENCE.

2. REPLACEMENT/REPAIR – BMP'S SHALL BE SHALL BE REPAIRED, REPLACED OR SUPPLEMENT OF ALL NONFUNCTIONAL BMP'S WITH FUNCITLAB BMP'S BY THE END OF THE NEXT BUSINESS DAY AFTER DISCOVERY UNLESS ANOTHER TIME FRAME IS SPECIFIED IN SECTION 11.5 OR 11.6.

3. SEDIMENT REMOVAL – SEDIMENT DEPOSITS SHOULD BE REMOVED AFTER EACH STORM EVENT. THEY MUST BE REMOVED WHEN DEPOSITS REACH APPROXIMATELY ONE-THIRD THE HEIGHT OF THE BARRIER. ANY SEDIMENT REMAINING IN PLACE AFTER THE SILT FENCE OR FILTER FABRIC IS NO LONGER REQUIRED SHALL BE DRESSED TO CONFORM WITH EXISTING GRADE, PREPARED, AND SEEDED WITH THE APPROPRIATE SEED MIX, OR SODDED AS DIRECTED BY THE ENGINEER.

4. REMOVAL OF SILT FENCE – SILT FENCES SHALL BE REMOVED WHEN THEY HAVE SERVED THEIR USEFUL PURPOSE, BUT NOT BEFORE THE UPWARD SLOPING AREA HAS BEEN PERMANENTLY STABILIZED. IF THE UPWARD SLOPING AREA IS TO BE EXPOSED LONGER THAN SIX (6) MONTHS, THAT AREA SHALL BE COVERED WITH TEMPORARY VEGETATION WHEN FIRST EXPOSED.

5. THE CONTRACTOR MUST ROUTINELY INSPECT THE CONSTRUCTION SITE ONCE EVERY SEVEN (7) DAYS DURING ACTIVE CONSTRUCTION AND WITHIN 24 HOURS AFTER A RAINFALL EVENT GREATER THAN 0.5 INCHES IN 24 HOURS. IF EVIDENCE OF EROSION AND SEDIMENT BMP DEPOSITION IS DISCOVERED CONTRACTOR MUST COMPLETE REMOVAL OR STABILIZATION WITHIN (7) CALENDER DAYS OF DISCOVERY.

6. ALL INSPECTIONS AND MAINTENANCE CONDUCTED DURING CONSTRUCTION MUST BE RECORDED IN WRITING AND THESE RECORDS MUST BE RETAINED WITH THE SWPPP RECORDS OF EACH INSPECTION AND

MAINTENANCE ACTIVITY SHALL INCLUDE:

A. DATE AND TIME OF INSPECTIONS;
B. NAME OF PERSON(S) CONDUCTING INSPECTIONS;
C. FINDINGS OF INSPECTIONS, INCLUDING RECOMMENDATIONS FOR CORRECTIVE ACTIONS;
D. CORRECTIVE ACTIONS TAKEN (INCLUDING DATES, TIMES, AND PARTY COMPLETING MAINTENANCE ACTIVIES.

E. DATE AND AMOUNT OF ALL RAINFALL EVENTS GREATER THAN 1/2 INCH (0.5 INCHES) IN 24 HOURS:

F. DOCUMENTS OF CHANGES MADE TO THE SWPPP AS REQUIRED IN SECTION 6.

7. WHERE PARTS OF THE CONSTRUCTION SITE HAVE UNDERGONE FINAL STABILIZATION, BUT WORK REMAINS ON OTHER PARTS OF SITE, INSPECTIONS OF THE STABILIZED AREAS MAY BE REDUCED TO ONCE PER MONTH. WHERE WORK HAS BEEN SUSPENDED DUE TO FROZEN GROUND CONDITIONS, THE REQUIRED INSPECTIONS AND MAINTENANCE MUST TAKE PLACE AS SOON AS RUNOFF OCCURS AT THE SITE OR PRIOR TO RESUMING CONSTRUCTION, WHICHEVER COMES FIRST.

POLLUTION PREVENTION MANAGEMENT MEASURES:

THE CONTRACTOR SHALL IMPLEMENT THE FOLLOWING POLLUTION PREVENTION MANAGEMENT MEASURES ON THE SITE:

1. SOLID WASTE: COLLECTED SEDIMENT, ASPHALT AND CONCRETE MILLINGS, FLOATING DEBRIS, PAPER, PLASTIC, FABRIC, CONSTRUCTION AND DEMOLITION DEBRIS AND OTHER WASTES MUST BE DISPOSED OF PROPERLY AND MUST COMPLY WITH MPCA DISPOSAL REQUIREMENTS.

2. HAZARDOUS MATERIAL: OIL, GASOLINE, PAINT AND ANY HAZARDOUS SUBSTANCES MUST BE PROPERLY STORED, INCLUDING SECONDARY CONTAINMENT, TO PREVENT SPILLS, LEAKS OR OTHER DISCHARGE. STORAGE AND DISPOSAL OF HAZARDOUS WASTE MUST BE IN COMPLIANCE WITH MPCA REGULATIONS.

3. CONCRETE WASHOUT IS DONE TRUCK BY TRUCK WITH A MOBILE WASHOUT SYSTEM PROVIDED AND COMPLETED BY THE CONCRETE CONTRACTOR. RUNOFF MUST BE CONTAINED AND WASTE PROPERLY DISPOSED OF.

4. NO ENGINE DEGREASING IS ALLOWED ON SITE.

STANDARD HOLD DOWN DETAILS

PAD WIDTH = 50' PAD TYPE = F

	(FT.)
A= GROSS H.D.	3.0
B= TOPSOIL RESPREAD	0.5
C= NET H.D.	2.5
D= PAD DEPTH	60
E= OVERSIZING	5
F= BLDG SETBACK	23

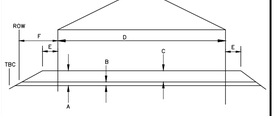

FULL BASEMENT PAD
NOT TO SCALE
ALL NUMBERS IN FEET

PAD WIDTH = 50' PAD TYPE = L, W

	(FT.)
A= GROSS H.D.	3.0
B= TOPSOIL RESPREAD	0.5
C= NET H.D.	2.5
D= PAD DEPTH TO F.G. REAR EL.	5
E= BENCH LENGTH	25
F= SLOPE @ REAR FLAT LENGTH	35
G= OVERSIZING	5
H= S/G SLOPE (X' VERT. TO 1 HORIZ.)	2
I= F.G. TO TOP OF BLACK @ RFL	0
J= BLDG SETBACK	23

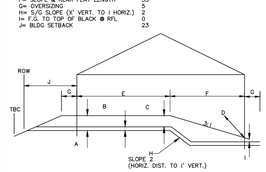

LOOK OUT AND WALK OUT PAD
NOT TO SCALE
ALL NUMBERS IN FEET

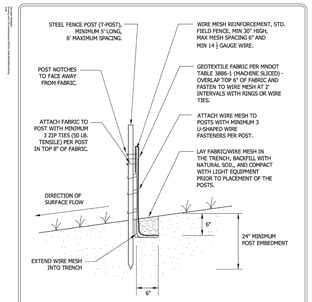

NOTE:
SPLICING WILL BE MADE AT OPPOSING SILT FENCE POSTS BY PLACING POSTS AND SILT FENCE NEXT TO EACH OTHER AND ROTATING 360°.

Stantec — SILT FENCE HEAVY DUTY — CHASKA, MINNESOTA — LAST REVISION: APRIL 2008 — PLATE NO. ERO-1B

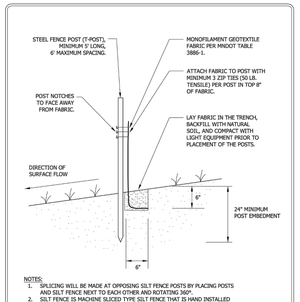

NOTES:
1. SPLICING WILL BE MADE AT OPPOSING SILT FENCE POSTS BY PLACING POSTS AND SILT FENCE NEXT TO EACH OTHER AND ROTATING 360°.
2. SILT FENCE IS MACHINE SLICED TYPE SILT FENCE THAT IS HAND INSTALLED IN AREAS INACCESSIBLE TO EQUIPMENT DUE TO SPACE LIMITATIONS, WET SOILS, STEEP SLOPES, ETC.

Stantec — SILT FENCE STANDARD — CHASKA, MINNESOTA — LAST REVISION: APRIL 2008 — PLATE NO. ERO-1C

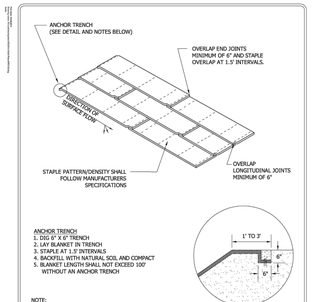

ANCHOR TRENCH:
1. DIG 6" X 6" TRENCH
2. LAY BLANKET IN TRENCH
3. STAPLE AT 1.5' INTERVALS
4. BACKFILL WITH NATURAL SOIL AND COMPACT
5. BLANKET LENGTH SHALL NOT EXCEED 100' WITHOUT AN ANCHOR TRENCH

NOTE:
SLOPE SURFACE SHALL BE FREE OF ROCKS, SOIL CLUMPS, STICKS, VEHICLE IMPRINTS, AND GRASS. BLANKETS SHALL HAVE GOOD SOIL CONTACT.

Stantec — EROSION CONTROL BLANKET INSTALLATION — CHASKA, MINNESOTA — LAST REVISION: APRIL 2008 — PLATE NO. ERO-2

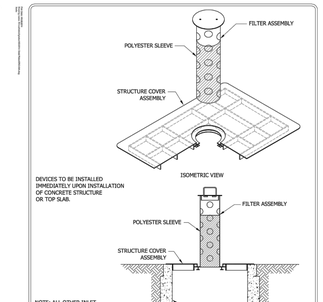

NOTE: ALL OTHER INLET PROTECTION DEVICES MUST BE APPROVED BY OWNER PRIOR TO INSTALLATION.

Stantec — INLET PROTECTION FOR CATCH BASIN BEFORE CURB CONSTRUCTION — CHASKA, MINNESOTA — LAST REVISION: APRIL 2008 — PLATE NO. ERO-4A

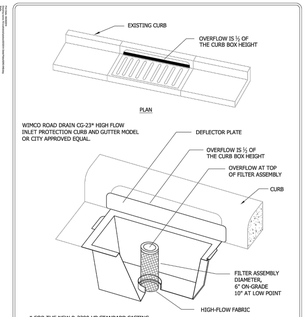

* FOR THE NEW R-3290-VB STANDARD CASTING, INSTALL WEMCO ROAD DRAIN CG-3290 OR CITY APPROVED EQUAL.

Stantec — INLET PROTECTION - CATCH BASIN INSERT AFTER CURB CONSTRUCTION — CHASKA, MINNESOTA — LAST REVISION: APRIL 2008 — PLATE NO. ERO-4B

DEVICES TO BE INSTALLED IMMEDIATELY UPON INSTALLATION OF CONCRETE STRUCTURE CONE OR TOP SLAB.

DEVICES SHOWN ARE AS MANUFACTURED BY WIMCO. MODEL NO. OF UNIT SHOWN: RD 27.

OTHER APPROVED INLET PROTECTION DEVICES FOR BEEHIVE CASTINGS ARE:
- ROYAL ENTERPRISES - MODEL NO.27 INFRASAFE SEDIMENT CONTROL BARRIER - DG.
- PRE MANUFACTURED UNIT BY CIRCLE "H" ENTERPRISES.

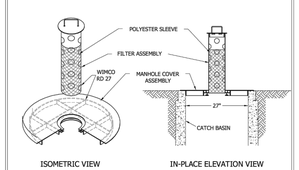

Stantec — INLET PROTECTION BEEHIVE CASTING — CHASKA, MINNESOTA — LAST REVISION: APRIL 2008 — PLATE NO. ERO-4C

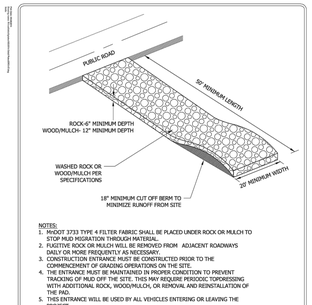

NOTES:
1. MNDOT 3733 TYPE 4 FILTER FABRIC SHALL BE PLACED UNDER ROCK OR MULCH TO STOP MUD MIGRATION THROUGH MATERIAL.
2. FUGITIVE ROCK OR MULCH WILL BE REMOVED FROM ADJACENT ROADWAYS DAILY OR MORE FREQUENTLY AS NECESSARY.
3. CONSTRUCTION ENTRANCE MUST BE CONSTRUCTED PRIOR TO THE COMMENCEMENT OF GRADING OPERATIONS ON THE SITE.
4. THE ENTRANCE MUST BE MAINTAINED IN PROPER CONDITION TO PREVENT TRACKING OF MUD OFF THE SITE. THIS MAY REQUIRE PERIODIC TOPDRESSING WITH ADDITIONAL ROCK, WOOD/MULCH, OR REMOVAL AND REINSTALLATION OF THE PAD.
5. THIS ENTRANCE WILL BE USED BY ALL VEHICLES ENTERING OR LEAVING THE PROJECT.
6. THE CONSTRUCTION ENTRANCE WILL BE REMOVED PRIOR TO THE PLACEMENT OF BITUMINOUS SURFACING.

Stantec — ROCK CONSTRUCTION ENTRANCE — CHASKA, MINNESOTA — LAST REVISION: APRIL 2008 — PLATE NO. ERO-7

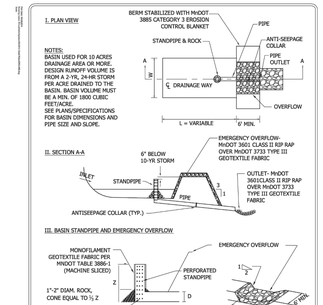

NOTE:
PIPE MATERIAL SHOULD BE RIGID

D = DIAMETER OF STANDPIPE EQUAL TO DIAMETER OF PIPE

Stantec — TEMPORARY SEDIMENTATION BASIN STANDPIPE OUTLET — CHASKA, MINNESOTA — LAST REVISION: APRIL 2008 — PLATE NO. ERO-8B

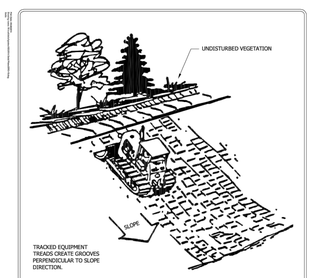

TRACKED EQUIPMENT TREADS CREATE GROOVES PERPENDICULAR TO SLOPE DIRECTION.

NOTE:
ALL SLOPES WITH A GRADE EQUAL TO OR STEEPER THAN 3:1 REQUIRE SLOPE TRACKING. SLOPES WITH A GRADE MORE GRADUAL THAN 3:1 REQUIRE SLOPE TRACKING IF THE STABILIZATION METHOD IS EROSION CONTROL BLANKET OR HYDROMULCH.

Stantec — SLOPE TRACKING — CHASKA, MINNESOTA — LAST REVISION: FEB 2004 — PLATE NO. ERO-10

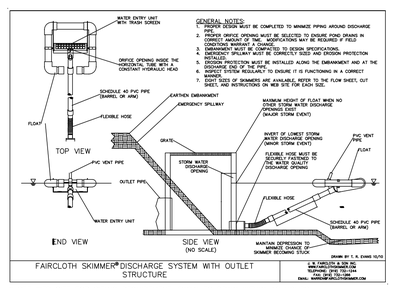

FAIRCLOTH SKIMMER® DISCHARGE SYSTEM WITH OUTLET STRUCTURE

* SEE WEB SITE FOR SIZING REQUIREMENT, BASIN TO DRAIN WITHIN 48 HOURS.

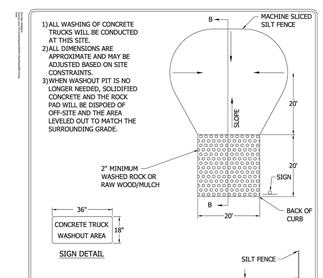

Stantec — CONCRETE WASHOUT PIT — CHASKA, MINNESOTA — LAST REVISION: April 2011 — PLATE NO. ERO-12

ALLIANT
733 Marquette Avenue
Suite 700
Minneapolis, MN 55402
612.758.3080
www.alliant-inc.com

CLUB WEST 11TH ADDITION
CHASKA, MINNESOTA
CONSTRUCTION DOCUMENTS
EROSION AND SEDIMENT CONTROL NOTES

I hereby certify that this plan, specification, or report was prepared by me or under my direct supervision and that I am a duly Licensed PROFESSIONAL ENGINEER under the laws of the State of MINNESOTA

DAVE NASH, PE
8/31/2022 — 21836
Date — License No.

QUALITY ASSURANCE/CONTROL

BY	DATE

DATE	ISSUE
8/31/2022	CITY SUBMITTAL
11/29/2022	CITY RESUBMITTAL
12/28/2022	CITY RESUBMITTAL 1
1/11/2023	LOT 6 UPDATE 2
2/10/23	LOT 1 AND 6 UPDATE 3

PROJECT TEAM DATA
DESIGNED: DN
DRAWN: AA JP
PROJECT NO: 213-0121

9

SHEET 9 OF 18

Drawing name: X:\2013\130121\plan sheets\Final Plat\130121esco.dwg Feb 10, 2023 - 11:05am

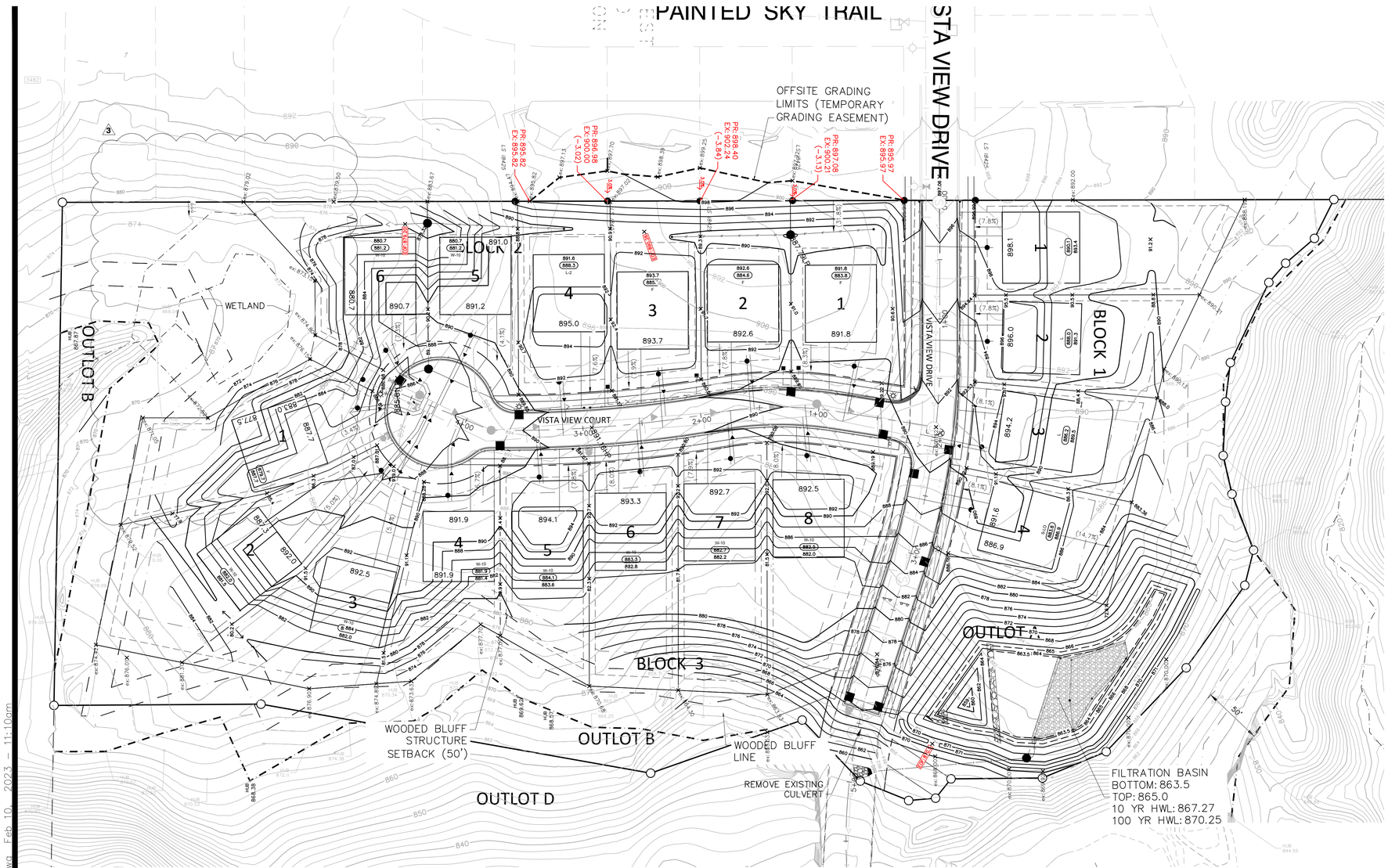

GRADING NOTES:

1. ALL FINISHED GRADES SHALL SLOPE AWAY FROM PROPOSED BUILDINGS AT MINIMUM GRADE OF 2.0%. ALL SWALES SHALL HAVE A MINIMUM SLOPE OF 2.0%.
2. THE CONTRACTOR SHALL KEEP THE ADJACENT ROADWAYS FREE OF DEBRIS AND PREVENT THE OFF-SITE TRACKING OF SOIL IN ACCORDANCE WITH THE REQUIREMENTS OF THE CITY AND WATERSHED.
3. NOTIFY GOPHER STATE ONE CALL, AT (800)252-1166, 48 HOURS PRIOR TO START OF CONSTRUCTION.
4. ALL IMPROVEMENTS TO CONFORM WITH CITY OF CHASKA CONSTRUCTION STANDARDS SPECIFICATION, LATEST EDITION.
5. ROCK CONSTRUCTION ENTRANCES SHALL BE PROVIDED AT ALL CONSTRUCTION ACCESS POINTS.
6. REFER TO GEOTECHNICAL REPORT AND PROJECT MANUAL, FOR SOIL CORRECTION REQUIREMENTS AND TESTING REQUIREMENTS.
7. STRIP TOPSOIL PRIOR TO ANY CONSTRUCTION. REUSE STOCKPILE ON SITE. STOCKPILE PERIMETERS MUST BE PROTECTED WITH SILT FENCE.
8. PRIOR TO STARTING CONSTRUCTION, THE CONTRACTOR SHALL BE RESPONSIBLE TO MAKE SURE THAT ALL REQUIRED PERMITS AND APPROVALS HAVE BEEN OBTAINED. NO CONSTRUCTION OR FABRICATION SHALL BEGIN UNTIL THE CONTRACTOR HAS RECEIVED AND THOROUGHLY REVIEWED ALL PLANS AND OTHER DOCUMENTS APPROVED BY ALL OF THE PERMITTING AUTHORITIES.
9. IMMEDIATELY FOLLOWING GRADING OF (3:1 OR GREATER) SIDE SLOPES AND DRAINAGE SWALES, WOOD FIBER BLANKET OR OTHER APPROVED SOIL STABILIZING METHOD (APPROVED BY ENGINEER) SHALL BE APPLIED OVER APPROVED SEED MIXTURE AND A MINIMUM OF 4" TOPSOIL.
10. THE GENERAL CONTRACTOR MUST DISCUSS DEWATERING PLANS WITH ALL SUBCONTRACTORS TO VERIFY NPDES REQUIREMENTS. IF DEWATERING IS REQUIRED DURING CONSTRUCTION, CONTRACTOR SHOULD CONSULT WITH EROSION CONTROL INSPECTOR AND ENGINEER TO DETERMINE APPROPRIATE METHOD.
11. REFER TO GRADING, DRAINAGE AND EROSION CONTROL PLAN FOR ALL EROSION AND SEDIMENT CONTROL DEVICE LOCATIONS.
12. BUILDING PERMITS ARE REQUIRED FOR ALL RETAINING WALLS 4 FEET IN HEIGHT OR GREATER AND THE WALLS SHALL BE DESIGNED BY A STRUCTURAL ENGINEER WITH DESIGN REVIEWED AND APPROVED BY THE CITY PRIOR TO INSTALLATION. ALL WALLS EXCEEDING 30" IN HEIGHT REQUIRE THE INSTALLATION OF A 42" SAFETY RAILING.

LEGEND:

886	EXISTING CONTOUR
886	PROPOSED CONTOUR
DD	DRAINAGE DIVIDE
888.5 TW 883.0 BW	TOP OF WALL ELEVATION BOTTOM OF WALL ELEVATION
2.00%	DRAINAGE DIRECTION ARROW
	EMERGENCY OVERFLOW FLOOD ROUTE (EOF)
	RETAINING WALL

LOT HOLD DOWNS

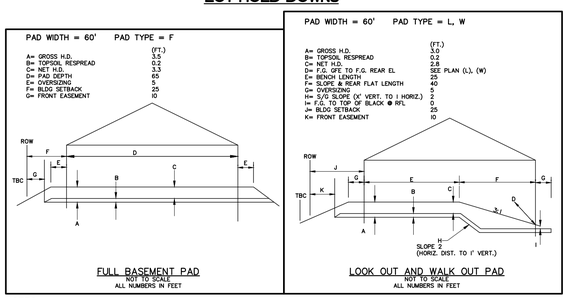

NOTES:

1. UPON COMPLETION OF ALL MASS GRADING ACTIVITIES A GRADING AS-BUILT SURVEY MUST BE SUBMITTED TO CITY STAFF AS OUTLINED IN THE LAND DISTURBANCE REQUIREMENTS. THIS MUST BE COMPLETED PRIOR TO ANY BUILDING PERMITS AND UTILITY AND STREET IMPROVEMENT CONSTRUCTION.
2. PER CITY OF CHASKA CODE, 6 INCHES OF TOPSOIL WILL BE ADDED TO ALL DEVELOPED AREAS TO HELP REDUCE LONG TERM WATER USE FOR IRRIGATION AND IMPROVE STORMWATER RUNOFF QUALITY.

N

0 25 50 100
SCALE IN FEET

ALLIANT
733 Marquette Avenue
Suite 700
Minneapolis, MN 55402
612.758.3080
www.alliant-inc.com

CLUB WEST 11TH ADDITION
CHASKA, MINNESOTA
CONSTRUCTION DOCUMENTS
GRADING PLAN

I hereby certify that this plan, specification, or report was prepared by me or under my direct supervision and that I am a duly Licensed PROFESSIONAL ENGINEER under the laws of the State of MINNESOTA

DAVE NASH, PE

8/31/2022 — Date
21836 — License No.

QUALITY ASSURANCE/CONTROL

BY	DATE

DATE	ISSUE
8/31/2022	CITY SUBMITTAL
11/29/2022	CITY RESUBMITTAL
12/28/2022	CITY RESUBMITTAL 1
1/11/2023	LOT 6 UPDATE 2
2/10/23	LOT 1 AND 6 UPDATE 3

PROJECT TEAM DATA

DESIGNED:	DN
DRAWN:	AA JP
PROJECT NO:	213-0121

10

SHEET 10 OF 18

Drawing name: X:\2013\130121\plan sheets\Final Plat\130121grad.dwg Feb 10, 2023 - 11:10am

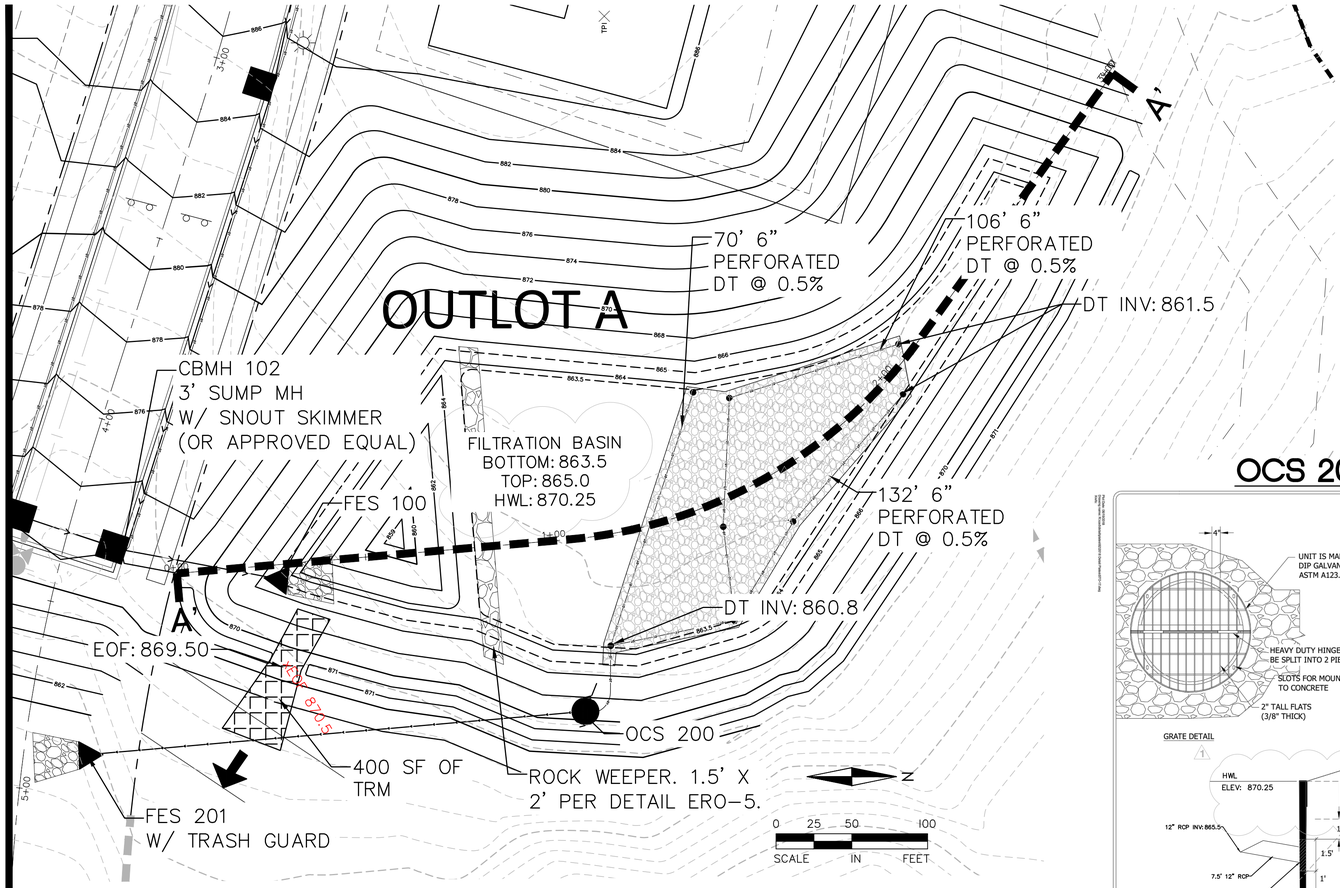

LEGEND:

- 886 — EXISTING CONTOUR
- 886 — PROPOSED CONTOUR
- 2.00% — DRAINAGE DIRECTION ARROW
- EMERGENCY OVERFLOW FLOOD ROUTE (EOF)

FILTRATION BASIN GENERAL NOTES:

1. ALL TEMPORARY EROSION CONTROL DEVICES MUST BE INSTALLED PRIOR TO INSTALLATION/CONSTRUCTION OF INFILTRATION BASIN.
2. FILTRATION BASIN TO BE UTILIZED AS TEMPORARY SEDIMENT BASIN. GRADE FILTRATION BASIN TO WITHIN 1-2' OF FINAL GRADE.
3. FINAL CONSTRUCTION OF BASIN SHALL BE SUSPENDED DURING PERIODS OF RAINFALL OR SNOWMELT. CONSTRUCTION SHALL REMAIN SUSPENDED IF PONDED WATER IS PRESENT OR IF RESIDUAL SOIL MOISTURE CONTRIBUTES SIGNIFICANTLY TO THE POTENTIAL FOR COMPACTION.
4. COMPACTION AND SMEARING OF THE SOILS BENEATH THE FLOOR AND SIDE SLOPES OF THE FILTRATION BASIN AREA, SHALL BE MINIMIZED. ACCEPTABLE EQUIPMENT FOR CONSTRUCTING THE BASIN INCLUDES EXCAVATION HOES, LIGHT EQUIPMENT WITH TURF TYPE TIRES, MARSH EQUIPMENT OR WIDE TRACK LOADERS.
5. IT IS REQUIRED THAT THE FILTRATION BASIN NOT BE EXCAVATED TO FINAL GRADE UNTIL THE CONTRIBUTING DRAINAGE AREA HAS BEEN CONSTRUCTED AND FULLY STABILIZED.
6. UNDERDRAINS MUST BE CONSTRUCTED USING SCHEDULE 40 PVC PIPE OR APPROVED EQUAL
7. UNDERDRAIN MUST BE INSTALLED WITH A MINIMUM 0.5% SLOPE.
8. USE SOLID SECTIONS OF NON-PERFORATED PVC PIPING AND WATERTIGHT JOINTS WHEREVER THE UNDERDRAIN SYSTEM PASSES BELOW BERMS OR MAKES A CONNECTION TO A DRAINAGE STRUCTURE.
9. TWO CLEANOUTS FOR EACH UNDERDRAIN, ONE AT THE UPSTREAM END AND ONE AT THE DOWNSTREAM. CLEANOUTS SHOULD BE AT LEAST 4" DIAMETER VIRTICAL NON-PERFORATED SCHEDULE 40 PVC PIPE AND EXTEND TO THE SURFACE. CLEANOUTS SHOULD BE CAPPED WITH A WATERTIGHT REMOVABLE CAP.
10. SCARIFY 8"-12" OF SOIL BENEATH DRAINTILE.

OCS 200

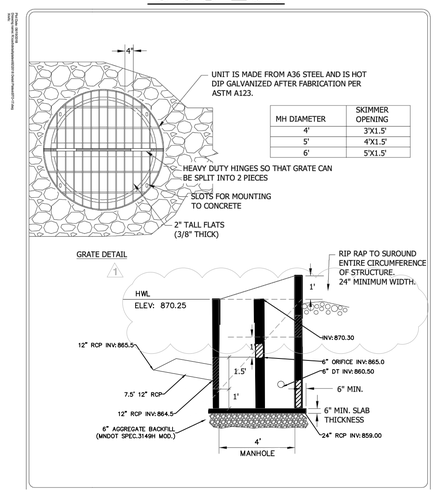

MH DIAMETER	SKIMMER OPENING
4'	3"X1.5'
5'	4"X1.5'
6'	5"X1.5'

OCS 200 - FES 201

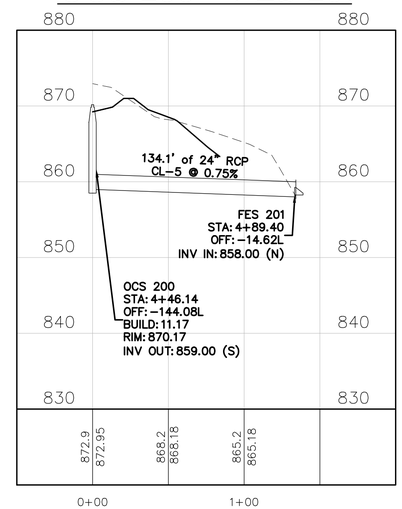

FILTRATION BASIN SECETION A-A

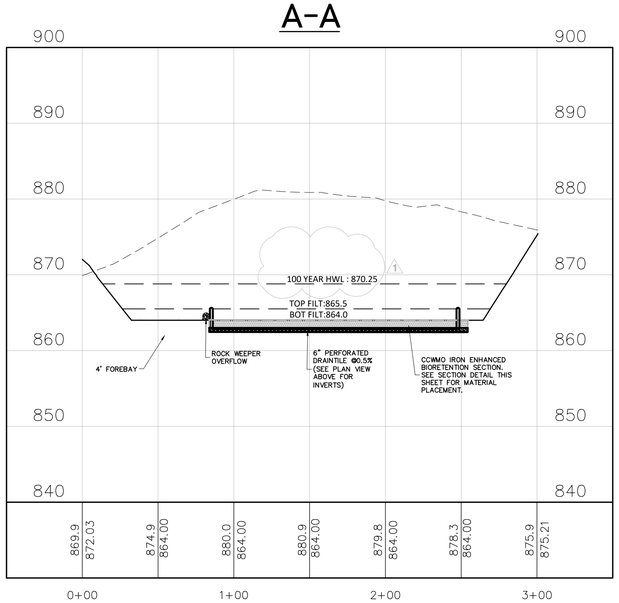

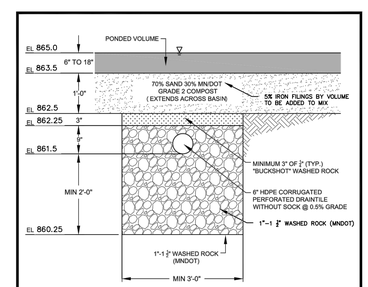

CALCULATIONS TO MEET RULES

VOLUME:

1. VOLUME REDUCTION IS CALCULATED AS 40% OF PONDED VOLUME.
2. IF NO VEGETATION IS PROVIDED, THE VOLUME CALCULATION IS LOWERED TO 50% OF ROCK VOLUME BELOW TILE.
3. TILE INVERT MUST BE 3 FT ABOVE DOWNSTREAM NWL, GROUNDWATER, BEDROCK, ETC.

WATER QUALITY:

1. FILTRATION IS CALCULATED AS 75% TP REMOVAL AND 90% TSS REMOVAL.

DRAWDOWN:

1. 48 HOUR DRAWDOWN OF BMPS IS REQUIRED. TO DETERMINE LENGTH OF TRENCH NEEDED, USE FILTRATION RATE OF 50 CF OF PONDED VOLUME WILL PASS THROUGH ONE LINEAR FOOT OF 3' WIDE TRENCH, OR 17 CF OF PONDED VOLUME PER SF OF SURFACE AREA.

CARVER COUNTY	WENCK	BIORETENTION TRENCH	DEC 2016 / DETAIL 1

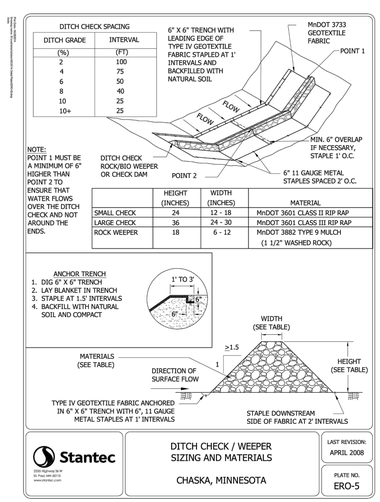

DITCH GRADE (%)	INTERVAL (FT)
2	100
4	75
6	50
8	40
10	25
10+	25

	HEIGHT (INCHES)	WIDTH (INCHES)	MATERIAL
SMALL CHECK	24	12 - 18	MnDOT 3601 CLASS II RIP RAP
LARGE CHECK	36	24 - 30	MnDOT 3601 CLASS III RIP RAP
ROCK WEEPER	18	6 - 12	MnDOT 3882 TYPE 9 MULCH (1 1/2" WASHED ROCK)

Stantec	DITCH CHECK / WEEPER SIZING AND MATERIALS	LAST REVISION: APRIL 2008
1970 Oakcrest Ave W St. Paul, MN 55113 www.stantec.com	CHASKA, MINNESOTA	PLATE NO. ERO-5

ALLIANT
733 Marquette Avenue
Suite 700
Minneapolis, MN 55402
612.758.3080
www.alliant-inc.com

CLUB WEST 11TH ADDITION

CHASKA, MINNESOTA

CONSTRUCTION DOCUMENTS

FILTRATION BASIN DETAIL

I hereby certify that this plan, specification, or report was prepared by me or under my direct supervision and that I am a duly Licensed PROFESSIONAL ENGINEER under the laws of the State of MINNESOTA

DAVE NASH, PE

8/31/2022 — Date

21836 — License No.

QUALITY ASSURANCE/CONTROL

BY — DATE

DATE	ISSUE
8/31/2022	CITY SUBMITTAL
11/29/2022	CITY RESUBMITTAL
12/28/2022	CITY RESUBMITTAL 1
1/11/2023	LOT 6 UPDATE 2
2/10/23	LOT 1 AND 6 UPDATE 3

PROJECT TEAM DATA

DESIGNED: DN

DRAWN: AA JP

PROJECT NO: 213-0121

11

SHEET 11 OF 18

Drawing name: X:\2013\130121\plan sheets\Final Plat\130121pond.dwg Feb 10, 2023 - 11:14am

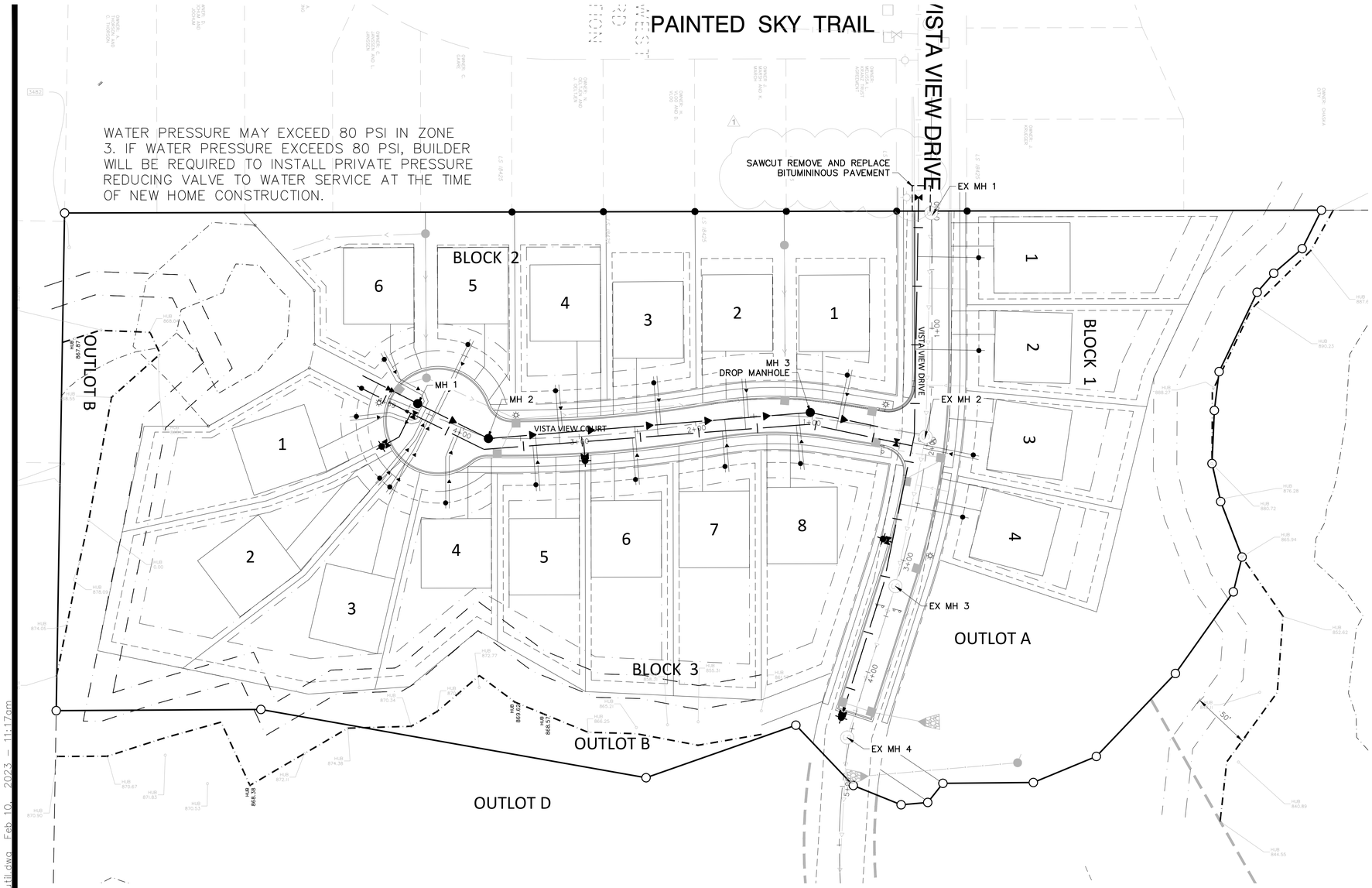

LEGEND:

- PROPOSED STORM SEWER
- PROPOSED DRAINTILE
- PROPOSED SANITARY SEWER
- PROPOSED WATERMAIN
- PROPOSED CATCH BASIN
- PROPOSED SANITARY MANHOLE
- PROPOSED GATE VALVE
- PROPOSED HYDRANT
- EXISTING GATE VALVE
- EXISTING HYDRANT
- EXISTING WATERMAIN
- EXISTING CATCH BASIN
- EXISTING STORM MANHOLE
- EXISTING STORM SEWER
- EXISTING SANITARY MANHOLE
- EXISTING SANITARY SEWER

UTILITY NOTES:

1. EXISTING UTILITIES, SERVICE LOCATIONS AND ELEVATIONS SHALL BE VERIFIED IN FIELD PRIOR TO CONSTRUCTION.
2. MAINTAIN A MIN 18" VERTICAL SEPARATION AT ALL PIPE CROSSINGS. LOWER WATERMAIN AS NECESSARY.
3. CONTRACTOR IS RESPONSIBLE FOR ALL PERMITS PRIOR TO THE START OF CONSTRUCTION.
4. PROVIDE POLYSTYRENE INSULATION FOR ALL STORM SEWER AND WATERMAIN CROSSINGS WHERE VERTICAL OR HORIZONTAL SEPARATION IS LESS THAN 6'.
5. ALL UTILITY WORK WITHIN THE R.O.W. SHALL COMPLY WITH THE CITY OF CHASKA ENGINEERING GUIDELINES.
6. NOTIFY GOPHER STATE ONE CALL 48 HOURS IN ADVANCE OF ANY UTILITY WORK.
7. PROVIDE TEMPORARY TRAFFIC CONTROL IN COMPLIANCE WITH MNDOT "TEMPORARY TRAFFIC CONTROL ZONE LAYOUTS–FIELD MANUAL" LATEST REVISION, FOR ANY CONSTRUCTION WITHIN PUBLIC R.O.W.
8. ALL SANITARY MANHOLES TO BE 48" DIAMETER CONCRETE W/NEENAH R–1642 CASTING, UNLESS NOTED OTHERWISE.
9. WATERMAIN, SERVICES, AND VALVES SHALL BE INSTALLED WITH MINIMUM 7.5' OF COVER.
10. WATER SERVICES SHALL BE 1" DIA. POLYTECH BLUE ULTRA WITH 1" CORP. STOP AND CURB STOP.
11. SEWER SERVICES SHALL BE 4" PVC, SCH 40, SDR 26, OR SDR 35 MINIMUM 2% SLOPE UNLESS OTHERWISE NOTED ON THE PLANS.
12. WATER SERVICES MAY BE PLACED IN SAME TRENCH AS SEWER SERVICES PROVIDED THAT A 24" VERTICAL & A 36" HORIZONTAL SEPARATION ARE MAINTAINED AND PIPE MATERIALS MEET THE CITY AND BUILDING CODES.
13. ALL CURB BOXES SHALL BE ADJUSTED TO AN ELEVATION OF 1" BELOW FINISHED GRADE.
14. ALL 6" HYDRANT LEADS AND 8" WATERMAIN SHALL BE C900 PVC.
15. ALL HYDRANTS TO BE CLOW MEDALLION. SEE CITY DETAIL WAT–11.
16. BITUMINOUS COAT SANITARY MANHOLES. SEE PLATE SAN–1.

N

0 25 50 100
SCALE IN FEET

ALLIANT
733 Marquette Avenue
Suite 700
Minneapolis, MN 55402
612.758.3080
www.alliant-inc.com

CLUB WEST 11TH ADDITION

CHASKA, MINNESOTA

CONSTRUCTION DOCUMENTS

SANITARY SEWER AND WATERMAIN OVERALL PLAN

I hereby certify that this plan, specification, or report was prepared by me or under my direct supervision and that I am a duly Licensed PROFESSIONAL ENGINEER under the laws of the State of MINNESOTA

DAVE NASH, PE

8/31/2022 — Date
21836 — License No.

QUALITY ASSURANCE/CONTROL

BY	DATE

DATE	ISSUE
8/31/2022	CITY SUBMITTAL
11/29/2022	CITY RESUBMITTAL
12/28/2022	CITY RESUBMITTAL 1
1/11/2023	LOT 6 UPDATE 2
2/10/23	LOT 1 AND 6 UPDATE 3

PROJECT TEAM DATA

DESIGNED:	DN
DRAWN:	AA JP
PROJECT NO:	213–0121

12

SHEET 12 OF 18

Drawing name: X:\2013\130121\plan sheets\Final Plat\130121util.dwg Feb 10, 2023 – 11:17am

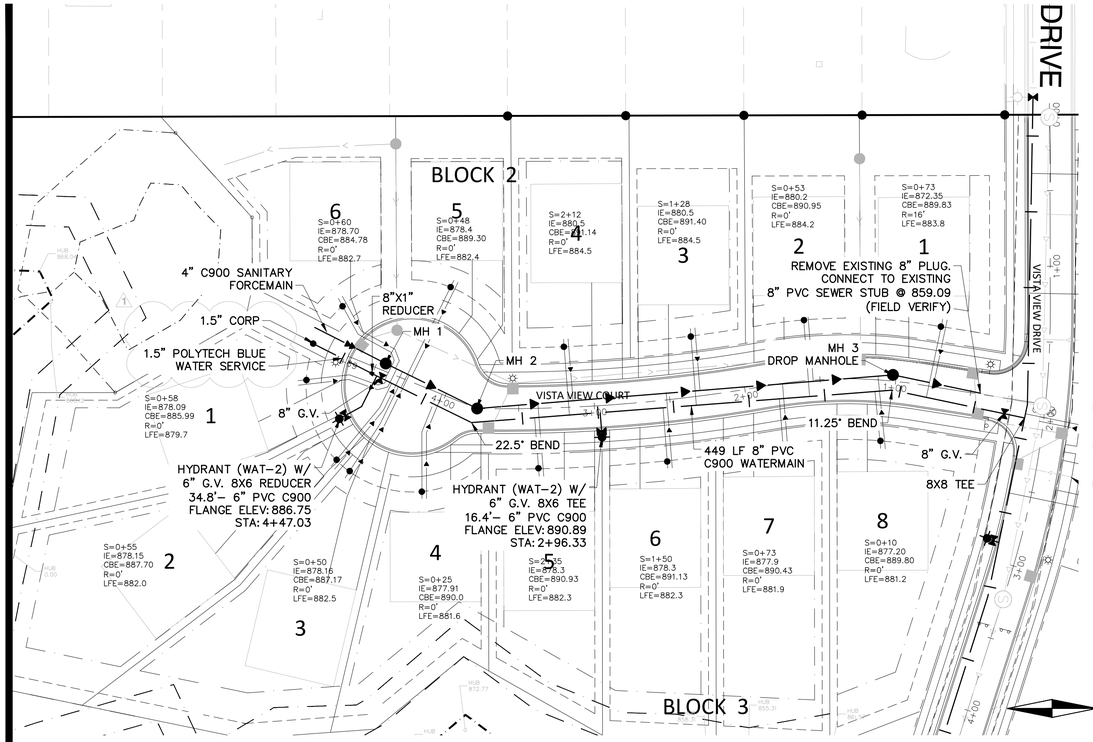

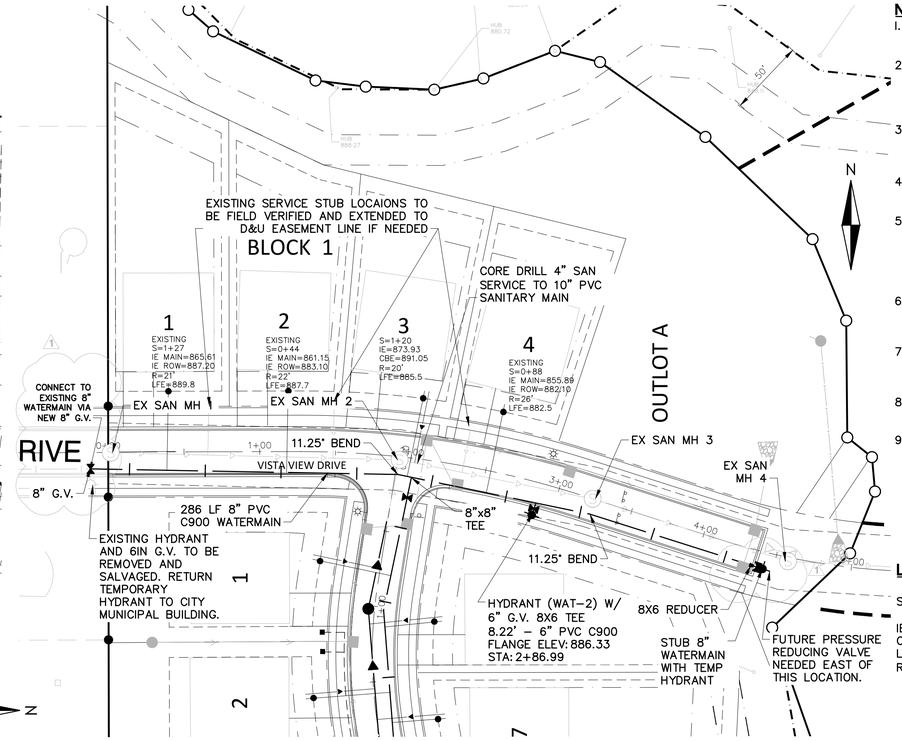

NOTES:

1. ALL SANITARY SERVICES SHALL BE 4" PVC SCH 40 @ 2.0% MIN. SLOPE.
2. ALL SANITARY MANHOLES SHALL BE 48" IN DIAMETER AND HAVE NEENAH R-1642 CASTINGS UNLESS NOTED OTHERWISE ON THE PLAN.
3. ALL WATER SERVICES SHALL BE 1" POLYTECH BLUE ULTRA WITH 1" CORP. STOP AND CURB STOP.
4. SERVICE RISERS CONNECTING TO C900 SANITARY MAIN MUST BE 4" C900.
5. SANITARY SEWER DEPTH ZONE AND PIPE MATERIAL TYPE:
   0'-16' = SDR 35
   16'-22' = SDR 26
   22'+=C-900
6. REFER TO CITY OF CHASKA 2016 ENGINEERING GUIDELINES FOR ADDITIONAL DETAIL.
7. ALL SANITARY SEWER STRUCTURES TO INCLUDE INTERNAL INFILTRATION BARRIER SEAL. SEE CITY ENGINEERING GUIDELINES.
8. ALL SANITARY SEWER DROP MANHOLES SHALL BE LINED PER CITY DETAIL.
9. BITUMINOUS COAT SANITARY MANHOLES SEE PLATE SAN-1.

LEGEND:

S = SANITARY SERVICE WYE STATION (FROM DOWNSTREAM MH)
IE = SANITARY SERVICE INVERT ELEVATION
CBE = CURB BOX ELEVATION
LFE = LOWEST FLOOR ELEVATION
R = RISER LENGTH (ACTUAL LENGTH, NOT VERT. RISE (VERTICAL HEIGHT = R X 0.707)

0 25 50 100
SCALE IN FEET

VISTA VIEW COURT

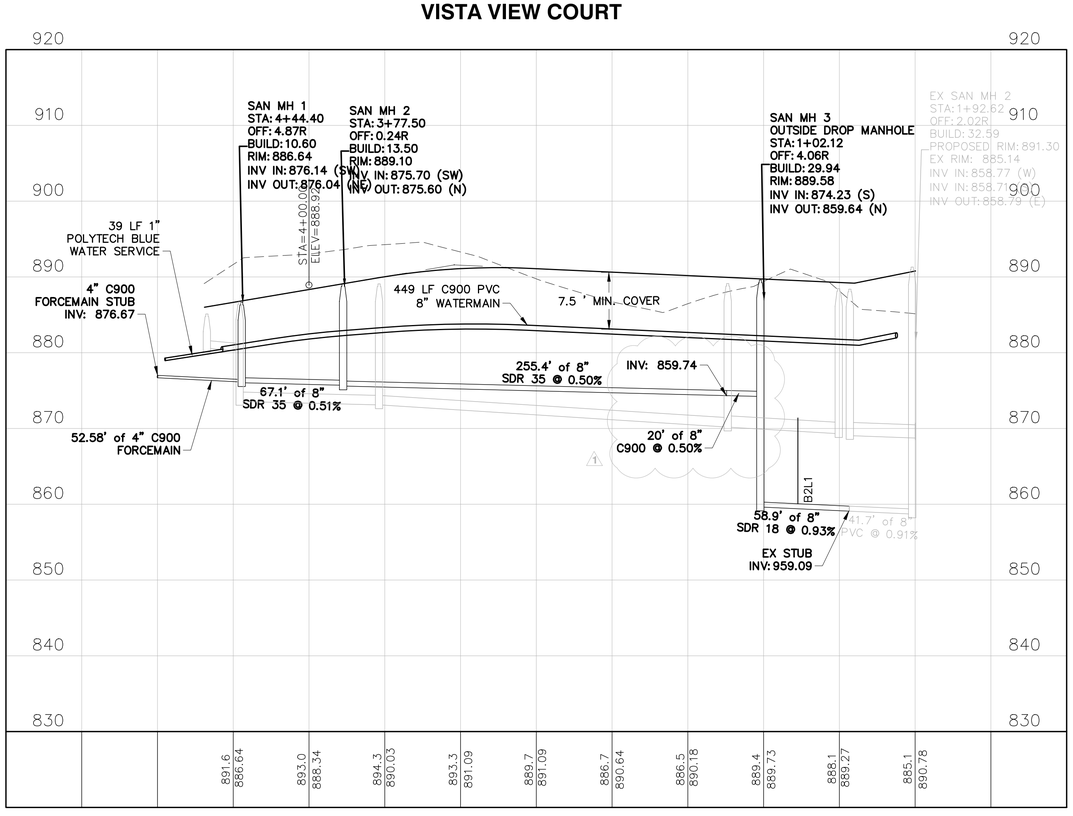

VISTA VIEW DRIVE

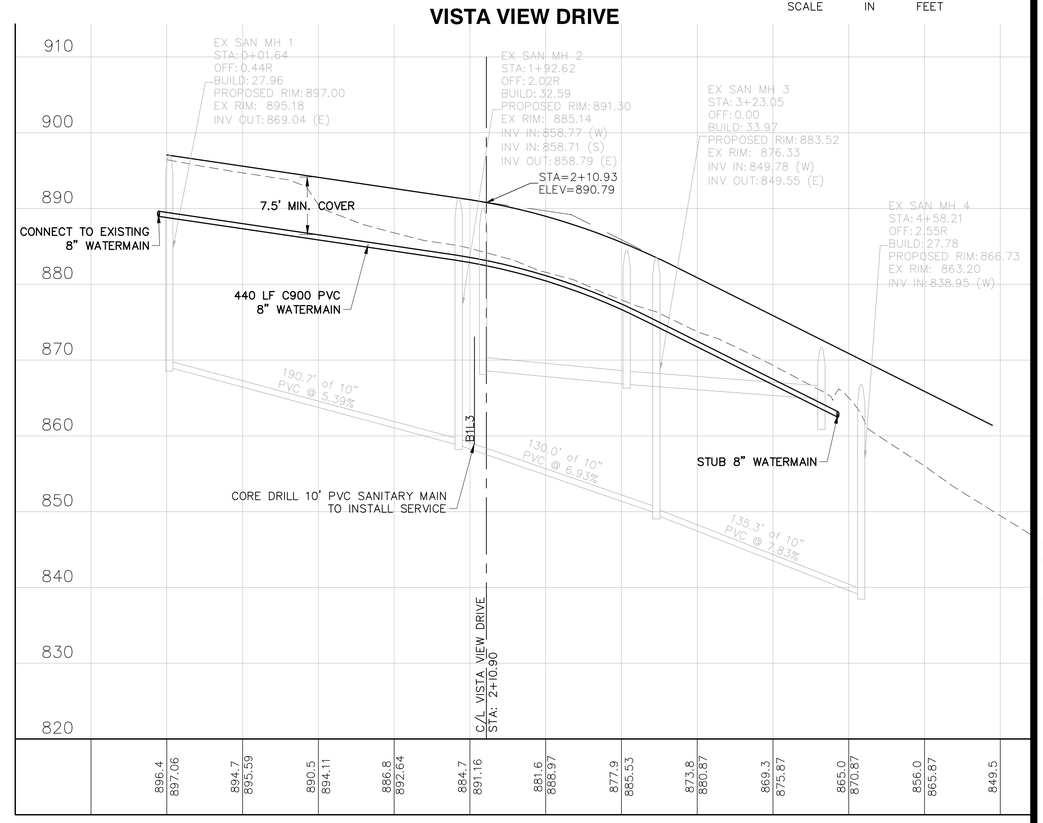

ALLIANT
733 Marquette Avenue
Suite 700
Minneapolis, MN 55402
612.758.3080
www.alliant-inc.com

CLUB WEST 11TH ADDITION

CHASKA, MINNESOTA

CONSTRUCTION DOCUMENTS

SANITARY SEWER AND WATERMAIN PLAN AND PROFILES

I hereby certify that this plan, specification, or report was prepared by me or under my direct supervision and that I am a duly Licensed PROFESSIONAL ENGINEER under the laws of the State of MINNESOTA

DAVE NASH, PE

8/31/2022 — Date
21836 — License No.

QUALITY ASSURANCE/CONTROL

BY	DATE

DATE	ISSUE
8/31/2022	CITY SUBMITTAL
11/29/2022	CITY RESUBMITTAL
12/28/2022	CITY RESUBMITTAL 1
1/11/2023	LOT 6 UPDATE 2
2/10/23	LOT 1 AND 6 UPDATE 3

PROJECT TEAM DATA

DESIGNED: DN
DRAWN: AA JP
PROJECT NO: 213-0121

13

SHEET 13 OF 18

Drawing name: X:\2013\130121\plan sheets\Final Plat\130121u1.dwg Feb 10, 2023 - 11:28am

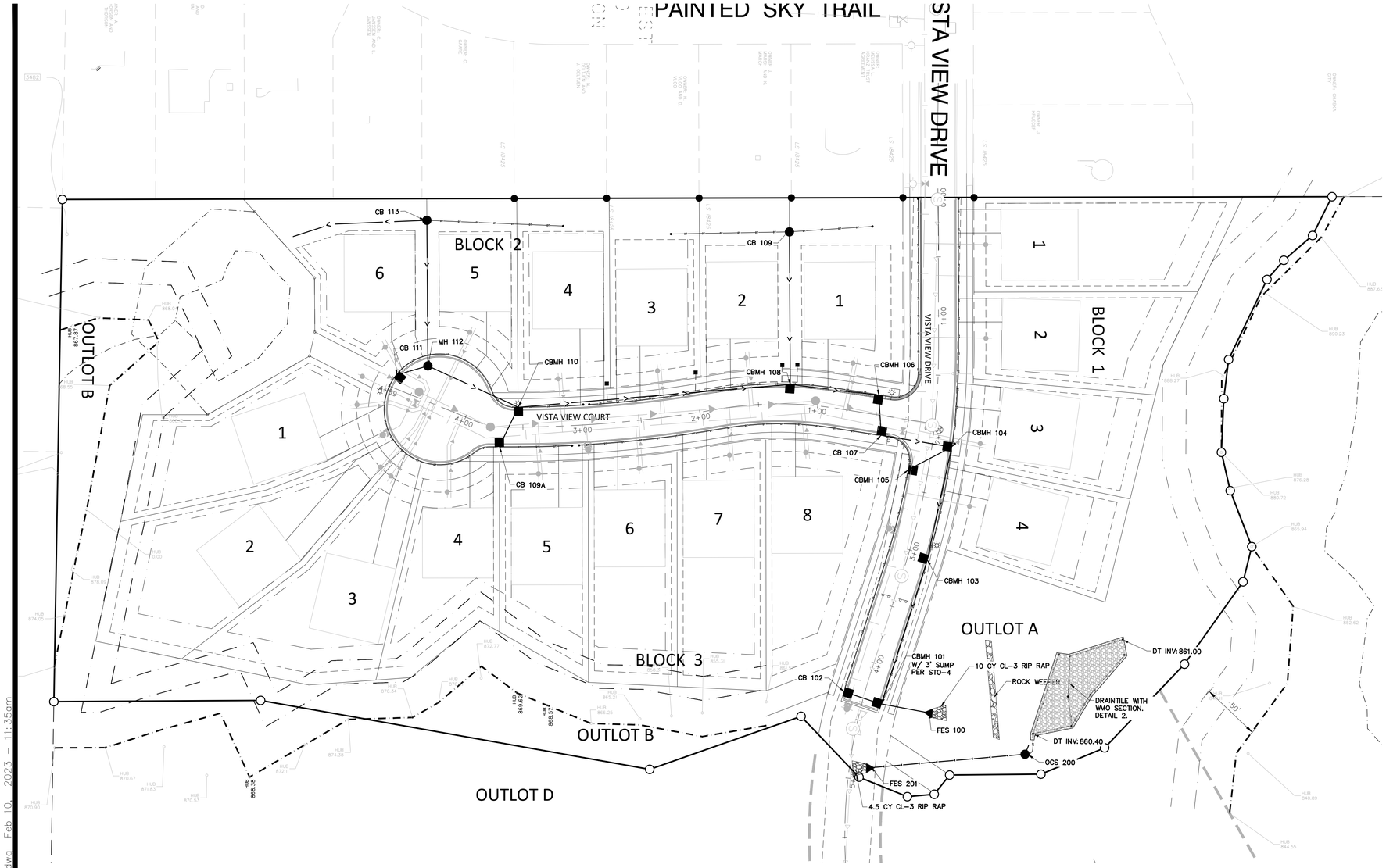

LEGEND:

- PROPOSED STORM SEWER
- PROPOSED DRAINTILE
- PROPOSED SANITARY SEWER
- PROPOSED WATERMAIN
- PROPOSED CATCH BASIN
- PROPOSED FLARED END
- PROPOSED SANITARY MANHOLE
- PROPOSED GATE VALVE
- PROPOSED HYDRANT
- EXISTING GATE VALVE
- EXISTING HYDRANT
- EXISTING WATERMAIN
- EXISTING CATCH BASIN
- EXISTING STORM MANHOLE
- EXISTING STORM SEWER
- EXISTING SANITARY MANHOLE
- EXISTING SANITARY SEWER

UTILITY NOTES:

1. EXISTING UTILITIES, SERVICE LOCATIONS AND ELEVATIONS SHALL BE VERIFIED IN FIELD PRIOR TO CONSTRUCTION.
2. MAINTAIN A MIN 18" VERTICAL SEPARATION AT ALL PIPE CROSSINGS. LOWER WATERMAIN AS NECESSARY.
3. CONTRACTOR IS RESPONSIBLE FOR ALL PERMITS PRIOR TO THE START OF CONSTRUCTION.
4. PROVIDE POLYSTYRENE INSULATION FOR ALL STORM SEWER AND WATERMAIN CROSSINGS WHERE VERTICAL OR HORIZONTAL SEPARATION IS LESS THAN 6'.
5. ALL UTILITY WORK WITHIN THE R.O.W. SHALL COMPLY WITH THE CITY OF CHASKA ENGINEERING GUIDELINES.
6. NOTIFY GOPHER STATE ONE CALL 48 HOURS IN ADVANCE OF ANY UTILITY WORK.
7. PROVIDE TEMPORARY TRAFFIC CONTROL IN COMPLIANCE WITH MNDOT "TEMPORARY TRAFFIC CONTROL ZONE LAYOUTS-FIELD MANUAL" LATEST REVISION, FOR ANY CONSTRUCTION WITHIN PUBLIC R.O.W.

N

0 25 50 100
SCALE IN FEET

ALLIANT
733 Marquette Avenue
Suite 700
Minneapolis, MN 55402
612.758.3080
www.alliant-inc.com

CLUB WEST 11TH ADDITION
CHASKA, MINNESOTA
CONSTRUCTION DOCUMENTS
STREET AND STORM SEWER OVERALL

I hereby certify that this plan, specification, or report was prepared by me or under my direct supervision and that I am a duly Licensed PROFESSIONAL ENGINEER under the laws of the State of MINNESOTA

DAVE NASH, PE

8/31/2022 — Date
21836 — License No.

QUALITY ASSURANCE/CONTROL

BY DATE

DATE	ISSUE
8/31/2022	CITY SUBMITTAL
11/29/2022	CITY RESUBMITTAL
12/28/2022	CITY RESUBMITTAL 1
1/11/2023	LOT 6 UPDATE 2
2/10/23	LOT 1 AND 6 UPDATE 3

PROJECT TEAM DATA

DESIGNED: DN
DRAWN: AA JP
PROJECT NO: 213-0121

14

SHEET 14 OF 18

Drawing name: X:\2013\130121\plan sheets\Final Plat\130121strm.dwg Feb 10, 2023 - 11:35am

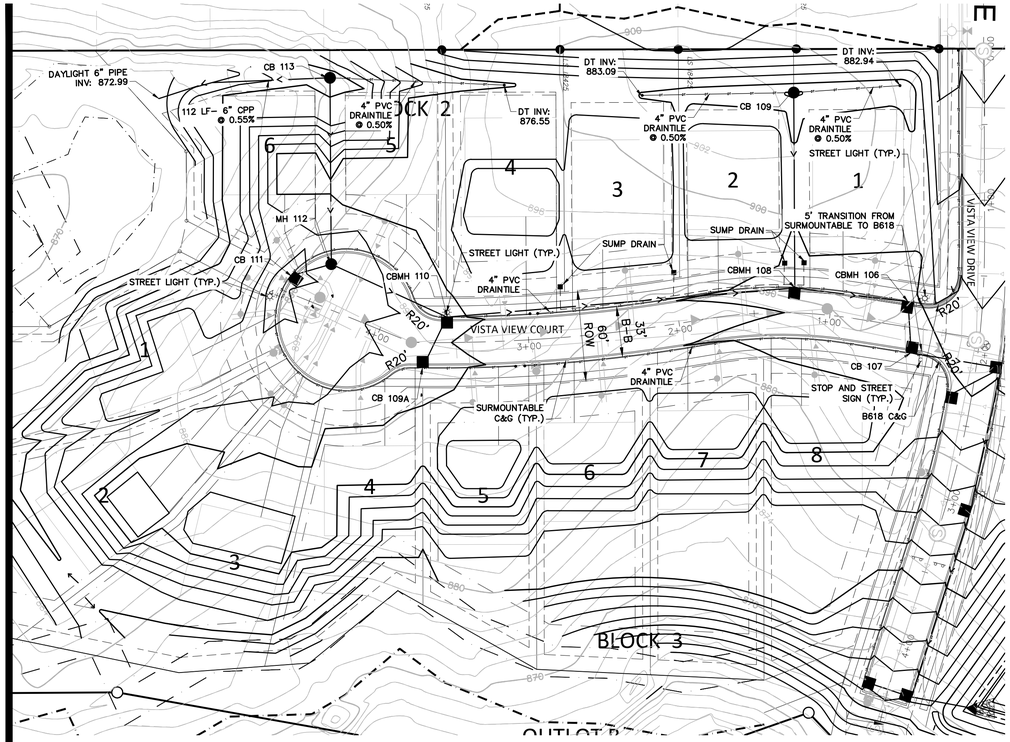

VISTA VIEW COURT

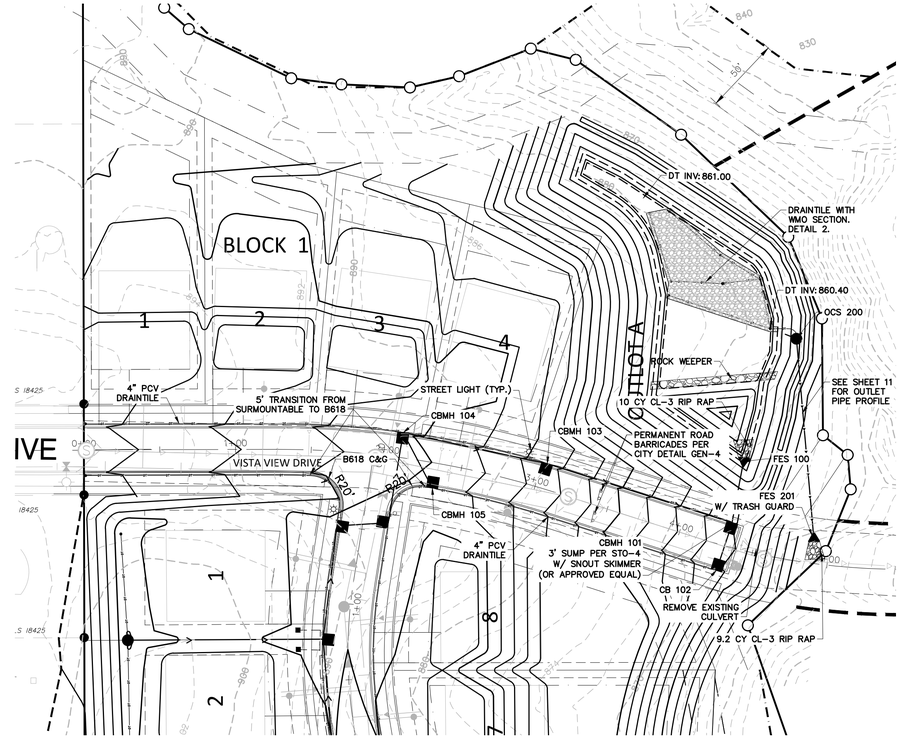

VISTA VIEW DRIVE

NOTES:

1. ALL PVC SUMP MAIN LINES SHALL BE SCHEDULE 40 PVC AND TRUNK LINES SHALL BE 6" DIAMETER WITH 4" DIAMETER SERVICE LEADS. PVC SUMP LINES SHALL BE INSTALLED PER CITY SPECIFICATIONS 2 FEET BEHIND CURB AND 2.0 FEET OF COVER BELOW FINISHED GRADE.
2. SUMP CATCH BASINS SHALL BE 12"X12" AND INSTALLED PER CITY SPECIFICATIONS. PLAN SUMP CB LOCATIONS SHOWN AT RIGHT OF WAY LINE, CITY TO APPROVE ANY NEW LOCATIONS. SUMP CB BOX SHALL ONLY BE INSTALLED AFTER PRIVATE UTILITIES ARE INSTALLED. CONTRACTOR TO COORDINATE TIMING WITH PRIVATE UTILITY CONTRACTOR AND HOME BUILDER.
3. ALL CURB SHALL BE TRANSITIONED TO B618 CURB AND GUTTER AT INTERSECTIONS.
4. ALL TRAFFIC SIGNS SHALL BE INSTALLED BE PER CITY SPECIFICATIONS AND THE MNMUTCD.
5. INSTALL DRAINTILE ALONG ALL PROPOSED CURB AND GUTTER PER CITY DETAIL. CONNECT TO CATCH BASIN AS NECESSARY.
6. ALL CATCH BASINS SHALL HAVE DRAINTILE INVERT AT 3' BELOW RIM.

STRUCTURE AND CASTING SCHEDULE

MH NO.	SIZE	CASTING
113	48" DIA.	R-4342
112	48" DIA.	R-1642
111	2x3	R-3076-V
110	48" DIA.	R-3076-V
109A	2x3	R-3076-V
109	48" DIA.	R-4342
108	48" DIA.	R-3076-V
107	48" DIA.	R-3076-V
106	48" DIA.	R-3076-V
105	2X3	R-3076-V
104	60" DIA.	R-3076-V
103	48" DIA.	R-3076-V
102	2X3	R-3076-V
101	72" DIA.	R-3076-V

NOTES:
1) ALL CASTINGS SHALL BE NEENAH OR APPROVED EQUAL.
2) SEE OCS DETAIL & SCHEDULE ON SHEET 11

N

0 25 50 100
SCALE IN FEET

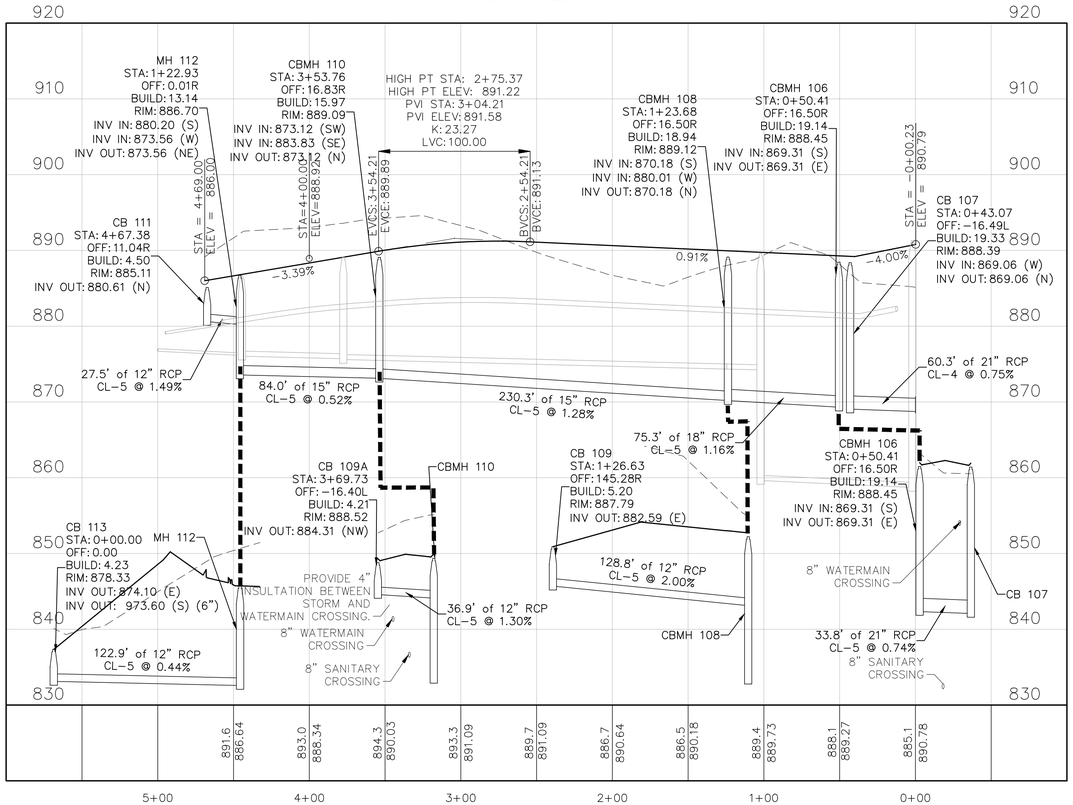

VISTA VIEW COURT

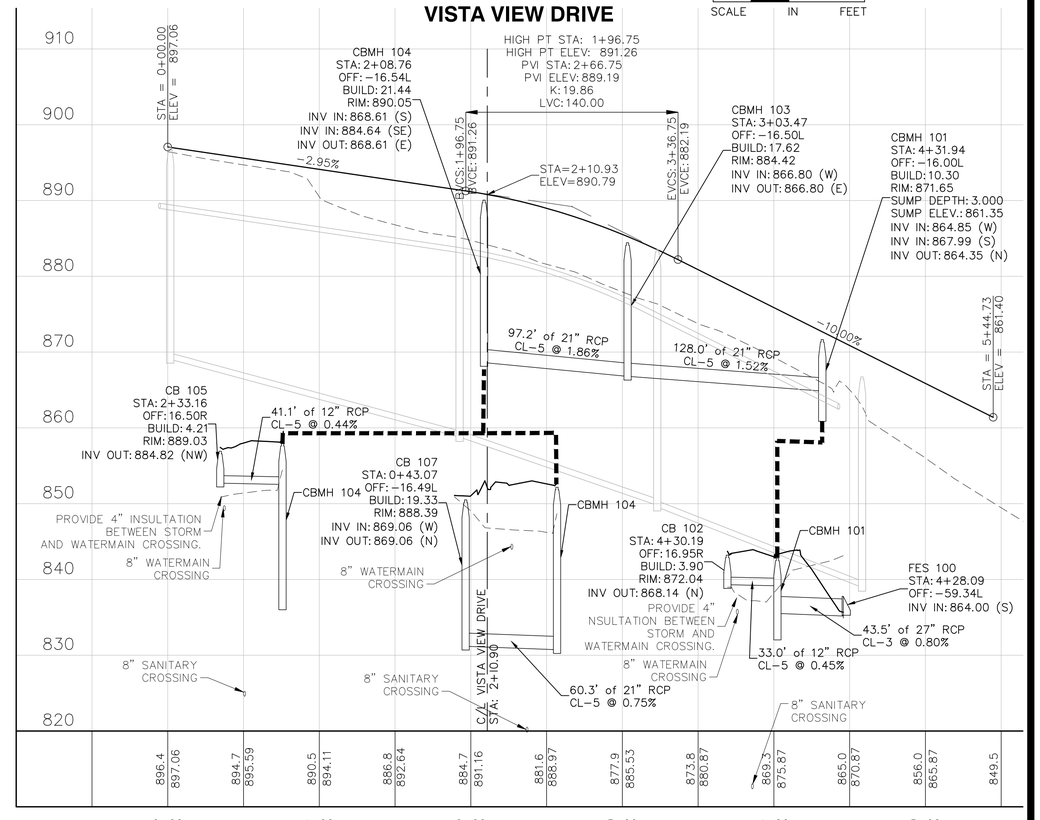

VISTA VIEW DRIVE

ALLIANT
733 Marquette Avenue
Suite 700
Minneapolis, MN 55402
612.758.3080
www.alliant-inc.com

CLUB WEST 11TH ADDITION

CHASKA, MINNESOTA

CONSTRUCTION DOCUMENTS

STREET AND STORM SEWER PLAN AND PROFILES

I hereby certify that this plan, specification, or report was prepared by me or under my direct supervision and that I am a duly Licensed PROFESSIONAL ENGINEER under the laws of the State of MINNESOTA

DAVE NASH, PE

8/31/2022 — Date
21836 — License No.

QUALITY ASSURANCE/CONTROL

BY	DATE

DATE	ISSUE
8/31/2022	CITY SUBMITTAL
11/29/2022	CITY RESUBMITTAL
12/28/2022	CITY RESUBMITTAL 1
1/11/2023	LOT 6 UPDATE 2
2/10/23	LOT 1 AND 6 UPDATE 3

PROJECT TEAM DATA

DESIGNED: DN
DRAWN: AA JP
PROJECT NO: 213-0121

15

SHEET 15 OF 18

Drawing name: X:\2013\130121\plan sheets\Final Plat\130121s1.dwg Feb 10, 2023 - 11:43am

VISTA VIEW DRIVE - VISTA VIEW COURT

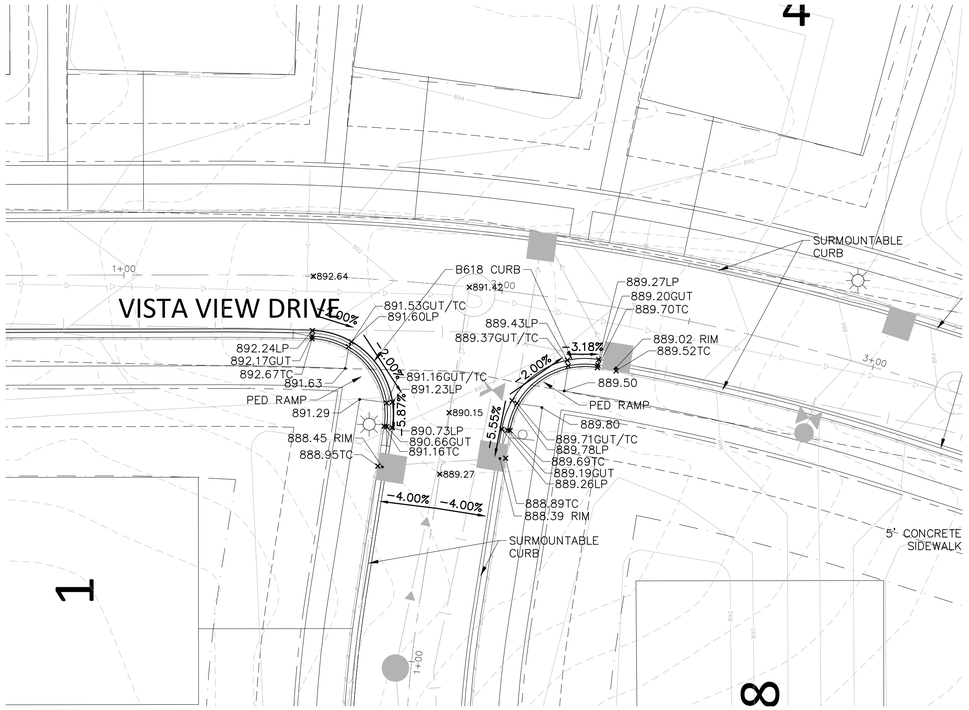

VISTA VIEW DRIVE- CONNECTION TO EXISTING

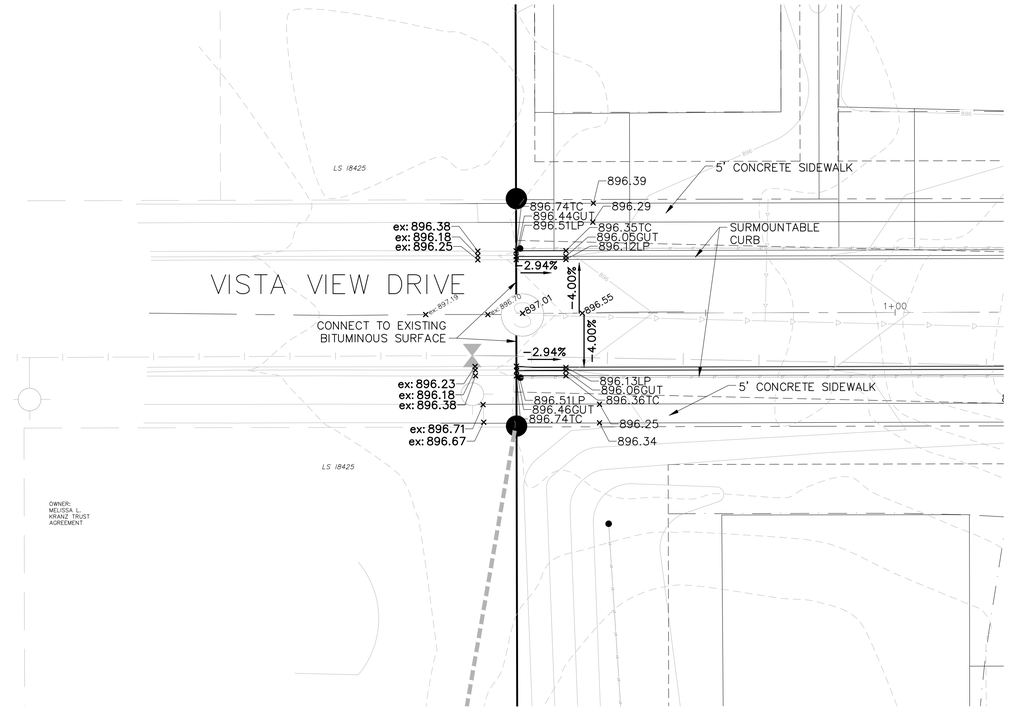

VISTA VIEW COURT CUL-DE-SAC

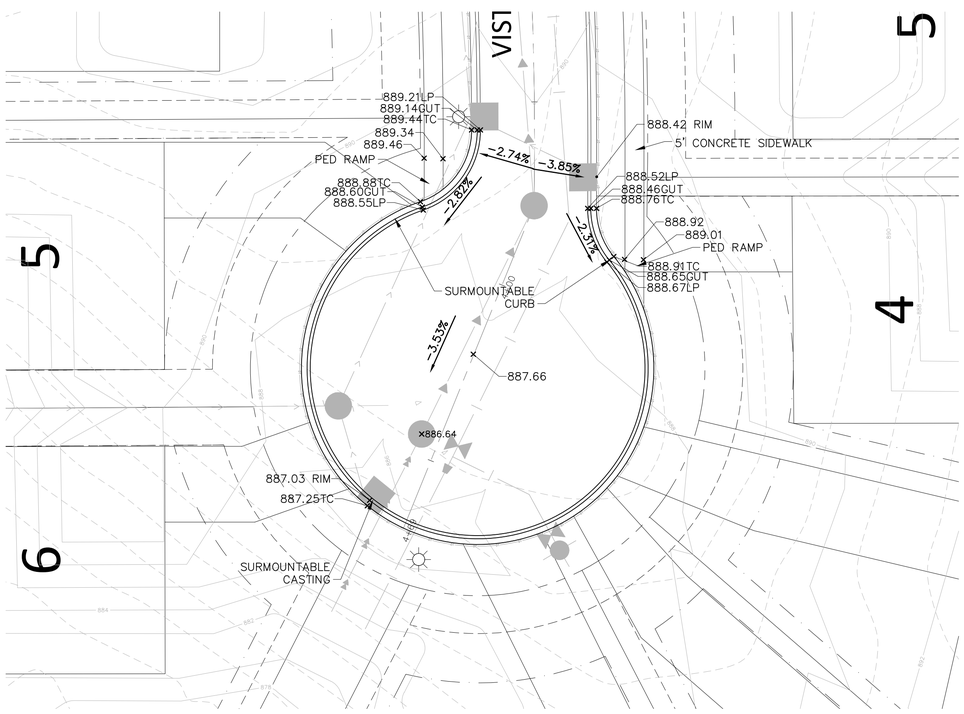

VISTA VIEW DRIVE - TURN AROUND AND STUB ROAD

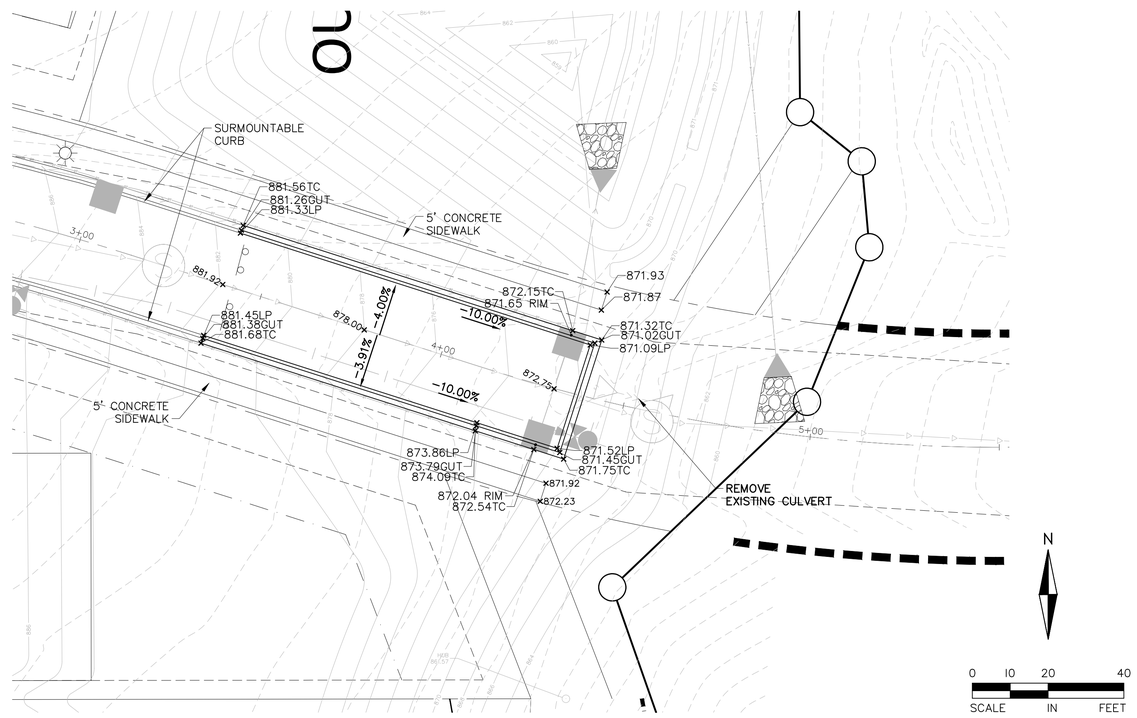

ALLIANT
733 Marquette Avenue
Suite 700
Minneapolis, MN 55402
612.758.3080
www.alliant-inc.com

CLUB WEST 11TH ADDITION

CHASKA, MINNESOTA

CONSTRUCTION DOCUMENTS

INTERSECTION DETAILS

I hereby certify that this plan, specification, or report was prepared by me or under my direct supervision and that I am a duly Licensed PROFESSIONAL ENGINEER under the laws of the State of MINNESOTA

DAVE NASH, PE

8/31/2022 — 21836
Date — License No.

QUALITY ASSURANCE/CONTROL

BY	DATE

DATE	ISSUE
8/31/2022	CITY SUBMITTAL
11/29/2022	CITY RESUBMITTAL
12/28/2022	CITY RESUBMITTAL 1
1/11/2023	LOT 6 UPDATE 2
2/10/23	LOT 1 AND 6 UPDATE 3

PROJECT TEAM DATA

DESIGNED: DN
DRAWN: AA JP
PROJECT NO: 213-0121

16

SHEET 16 OF 18

Drawing name: X:\2013\130121\plan sheets\Final Plat\130121sept.dwg Feb 10, 2023 - 11:49am

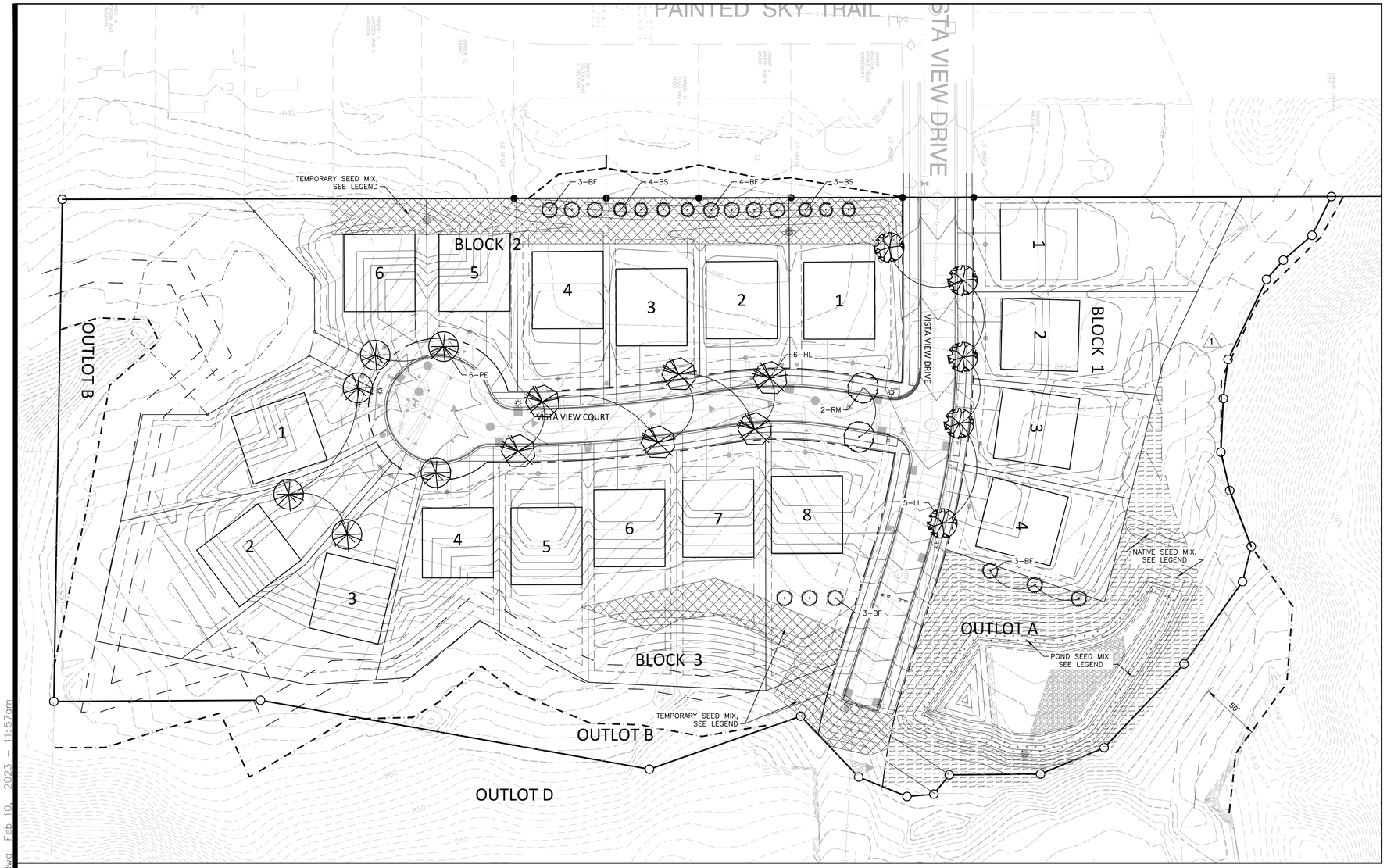

LANDSCAPE REQUIREMENTS

PER CITY OF CHASKA ZONING ORDINANCE:
SECTION 9.6.4 REQUIREMENTS FOR ONE AND TWO FAMILY RESIDENTIAL SUBDIVISIONS:
ONE OVERSTORY DECIDUOUS TREES PER EVERY 50 LF ALONG PUBLIC STREETS, ON EACH SIDE, MINIMUM 2.5" CALIPER (B&B).

REQUIRED TREE CALCULATIONS:	REQUIRED:	PROPOSED:
1,902 LF / 50 = 38.04	39	39

LANDSCAPE LEGEND:

REQUIRED BOULEVARD TREES SHALL BE TWO AND ONE HALF (2.5") INCHES IN DIAMETER (B&B) AS MEASURED FROM SIX (6) INCHES ABOVE GROUND. REQUIRED TREES SHALL BE PLANTED WITHIN SIX (6) MONTHS OF HOME OCCUPANCY.

POND-MNDOT SEED MIX: 33-261 (NATIVE/PONDS & WET AREAS IN CENTRAL, SOUTHERN AND WESTERN MN).

NATIVE-MNDOT SEED MIX: 35-241 (NATIVE/GENERAL ROADSIDE).

TEMPORARY SEED MIX: 22-112 (LOW MAINTENANCE RESIDENTIAL TURF GRASS SEED).

LANDSCAPE SCHEDULE:

QUANTITY	KEY	COMMON NAME	SCIENTIFIC NAME	SIZE / ROOT TYPE	NOTES
OVERSTORY TREES					
6	**HL**	Skyline Honeylocust	Gleditisia tricanthos var. inermis 'Skycole'	2.5" Cal. B&B	Straight Trunk, No V-Crotch
5	**LL**	Greenspire Linden	Tilia cordata 'Greenspire'	2.5" Cal. B&B	Straight Trunk, No V-Crotch
6	**PE**	Patriot Elm	Ulmus patriot	2.5" Cal. B&B	Straight Trunk, No V-Crotch
2	**RM**	Autumn Blaze Red Maple	Acer x freemanii 'Jeffersred'	2.5" Cal. B&B	Straight Trunk, No V-Crotch
CONIFEROUS TREES					
13	**BF**	Balsam Fir	Abies balsamea	6' Ht.	Full Form
7	**BS**	Black Hills Spruce	Picea glauca 'Densata'	6' Ht.	Full Form
Note: Plan supercedes schedule in event of a descrepancy					

N

0 25 50 100
SCALE IN FEET

ALLIANT
733 Marquette Avenue
Suite 700
Minneapolis, MN 55402
612.758.3080
www.alliant-inc.com

CLUB WEST 11TH ADDITION
CHASKA, MINNESOTA
CONSTRUCTION DOCUMENTS
LANDSCAPE PLAN

I hereby certify that this plan, specification, or report was prepared by me or under my direct supervision and that I am a duly Licensed PROFESSIONAL ENGINEER under the laws of the State of MINNESOTA

DAVE NASH, PE
8/31/2022 — Date
21836 — License No.

QUALITY ASSURANCE/CONTROL

BY — DATE

DATE	ISSUE
8/31/2022	CITY SUBMITTAL
11/29/2022	CITY RESUBMITTAL
12/28/2022	CITY RESUBMITTAL 1
1/11/2023	LOT 6 UPDATE 2
2/10/23	LOT 1 AND 6 UPDATE 3

PROJECT TEAM DATA

DESIGNED: DN
DRAWN: AA JP
PROJECT NO: 213-0121

17

SHEET 17 OF 18

Drawing name: X:\2013\130121\plan sheets\Final Plat\130121land.dwg Feb 10, 2023 - 11:57am

SEED PLANTING NOTES:

POND AREA SEED MIX: MN STATE SEED MIX 33–261. (STORMWATER SOUTH & WEST)
SEEDING RATE TO BE 35 LBS/ACRE (PURE LIVE SEED).

NATIVE SEED MIX: MN STATE SEED MIX 35–241. (MESIC PRAIRIE GENERAL)
SEEDING RATE TO BE 36.5 LBS/ACRE (PURE LIVE SEED).

APPLY SEED PER THE FOLLOWING:
MULCH SEEDED AREAS WITH Mn/DOT TYPE 3 (MCIA CERTIFIED WEED FREE) MULCH AT A RATE OF 1 TON PER ACRE WITHIN 48 HOURS OF SEEDING. MULCH SHOULD THEN BE DISC ANCHORED TO KEEP IT FROM BLOWING AWAY.

SEEDING SHALL BE APPLIED FROM APRIL 15 – JULY 20 OR SEPTEMBER 20 – FREEZE UP.

IF HYDROSEEDING UTILIZE APPROXIMATELY 500 GALLONS OF WATER PER ACRE. REFER TO MN/DOT SPEC 3884 FOR PROPER INSTALLATION OF HYDRO–SEED. ALL NATIVE SEEDS USED ON THIS PROJECT SHALL BE CERTIFIED TO BE OF MINNESOTA ORIGIN BY THE MINNESOTA CROP IMPROVEMENT ASSOCIATION (MCIA). SITE TO BE PREPARED BY LOOSENING TOPSOIL TO A MINIMUM DEPTH OF 3 INCHES. THE SITE TO BE HARROWED OR RAKED FOLLOWING SEEDING, AND THEN PACKED USING A CULTI–PACKER OR EQUIVALENT. SEE MNDOT SEEDING MANUAL FOR REFERENCE.

MAINTAIN SEEDED AREAS BY WATERING, REMULCHING AND REPLANTING AS NECESSARY TO ESTABLISH A UNIFORMLY DENSE STAND OF THE SPECIFIED GRASSES UNTIL ACCEPTED. ANY AREAS FAILING TO ESTABLISH A STAND SHALL BE RESEEDED, REFERTILIZED AND REMULCHED WHENEVER 70% VEGETATIVE COVER IS NOT ACHIEVED. RESEEDING SHALL CONFORM IN ALL RESPECTS TO THESE SPECIFICATIONS. THE CONTRACTOR SHALL REPAIR ANY DAMAGE TO THE WORK AREAS RESULTING FROM EROSION AND/OR EQUIPMENT. THE CONTRACTOR SHALL REPAIR DAMAGE, INCLUDING REGRADING, RESEEDING, ETC. AS NECESSARY, BEFORE SIGNIFICANT DAMAGE OCCURS.

TEMPORARY STOCK PILE SEED AND STRAW MULCH:
MnDOT # 22–112 SEED MIXTURE DESIGNATIONS – 40 LBS PER ACRE.

SEEDING SHALL BE APPLIED FROM APRIL 1 – JULY 20 OR JULY 20 – FREEZE UP.

MULCH SEEDED AREAS AT THE RATE OF 2 TONS PER ACRE. MULCH TO BE HIGH QUALITY WEED FREE MULCH, NATIVE GRASS MULCH, OR CLEAN STRAW. MULCH WITHIN 48 HOURS OF SEEDING.

MAINTAIN SEEDED AREAS BY WATERING, REMULCHING AND REPLANTING AS NECESSARY TO ESTABLISH A UNIFORMLY DENSE STAND OF THE SPECIFIED GRASSES UNTIL ACCEPTED.

ANY AREAS FAILING TO ESTABLISH A STAND SHALL BE RESEEDED, REFERTILIZED AND REMULCHED WHENEVER 70% VEGETATIVE COVER IS NOT ACHIEVED. RESEEDING SHALL CONFORM IN ALL RESPECTS TO THESE SPECIFICATIONS. THE CONTRACTOR SHALL REPAIR ANY DAMAGE TO THE WORK AREAS RESULTING FROM EROSION AND/OR EQUIPMENT. THE CONTRACTOR SHALL REPAIR DAMAGE, INCLUDING REGRADING, RESEEDING, ETC. AS NECESSARY, BEFORE SIGNIFICANT DAMAGE OCCURS.

LANDSCAPE PLAN NOTES:

1. LANDSCAPE CONTRACTOR SHALL VISIT SITE PRIOR TO SUBMITTING BID TO BECOME COMPLETELY FAMILIAR WITH SITE CONDITIONS.
2. CONTRACTOR WILL STAKE OR MARK ALL PLANT MATERIAL LOCATIONS PRIOR TO INSTALLATION. THE STAKES SHALL INCLUDE THE TYPE/VARIETY OF TREES TO BE PLANTED. CONTRACTOR SHALL HAVE OWNERS REPRESENTATIVE APPROVE ALL STAKING PRIOR TO INSTALLATION. UPON COMPLETION OF THE STAKING/LABELING NOTIFY THE ASSISTANT CITY ENGINEER FOR REVIEW IN THE FIELD.
3. INSTALL 4–6" DEPTH SHREDDED HARDWOOD MULCH AROUND ROOT SAUCER OF ALL TREES ISOLATED FROM PLANT BEDS.
4. CONTRACTOR SHALL COMPLETELY GUARANTEE ALL WORK FOR A PERIOD OF ONE YEAR BEGINNING AT THE DATE OF ACCEPTANCE. CONTRACTOR WILL MAKE ALL REPLACEMENTS PROMPTLY (AS PER DIRECTION OF OWNER).
5. ANY MATERIAL WHICH DIES, OR DEFOLIATES (PRIOR TO ACCEPTANCE OF WORK) WILL BE PROMPTLY REMOVED AND REPLACED. THE OWNER'S REPRESENTATIVE RESERVES THE RIGHT TO REJECT ANY PLANT MATERIAL NOT MEETING SPECIFICATIONS.
6. LANDSCAPE CONTRACTOR TO WATER AND MAINTAIN ALL PLANT MATERIALS AND SEED UNTIL INITIAL ACCEPTANCE.
7. ALL MATERIAL SHALL COMPLY WITH STATE AND LOCAL CONSTRUCTION STANDARDS.
8. LANDSCAPE CONTRACTOR SHALL REMOVE ALL OF THEIR OWN DEBRIS FROM SITE.
9. REPAIR AT NO COST TO OWNER ALL DAMAGE TO PROPERTY RESULTING FROM LANDSCAPE WORK.
10. CONTRACTOR IS RESPONSIBLE FOR LOCATING ALL UNDERGROUND UTILITIES AND SHALL AVOID DAMAGE TO UTILITIES DURING THE COURSE OF THE WORK. CONTRACTOR IS RESPONSIBLE FOR REPAIRING ANY DAMAGE TO UTILITIES, SITE STRUCTURES, ETC., RESULTING FROM LANDSCAPE WORK.
11. LANDSCAPE CONTRACTOR TO COORDINATE INSTALLATION WITH GENERAL CONTRACTOR.
12. AFTER COMPLETION OF WORK AND PRIOR TO LEAVING SITE, SWEEP AND WASH ALL PAVED SURFACES AND REMOVE ALL DEBRIS RESULTING FROM LANDSCAPE OPERATIONS.
13. ALL PLANTING SOIL BELOW ROOT BALL SHALL BE COMPACTED AND THOROUGHLY WATERED PRIOR TO PLANTING.
14. DEVELOPER TO PROVIDE AN IRRIGATION PLAN FOR THE MAIN ENTRY ROAD 'A' AND PARK. REFER TO IRRIGATION PLAN BY OTHERS FOR DESIGN AND LIMITS.
15. GENERAL CONTRACTOR SHALL FOLLOW THE COUNTY/STATE SOIL & EROSION CONTROL SPECIFICATIONS FOR DISTURBED AREA STABILIZATION.
16. LANDSCAPE CONTRACTOR TO BLEND AREAS OF CONSTRUCTION LIMITS AT PROPERTY LINES.
17. ALL BOULEVARDS TO BE SODDED AS EACH LOT IS DEVELOPED UNLESS OTHERWISE SHOWN ON PLANS.
18. BOULEVARD TREES TO BE INSTALLED AS EACH LOT IS DEVELOPED UNLESS OTHERWISE SHOWN ON PLANS. DEVELOPER TO DETERMINE SPECIES & INSTALL TREES LOCATED ALONG ENTRY ROAD 'A', ENTRY TO PARK AND OUTLOT 'K' PER CITY TREE POLICY.

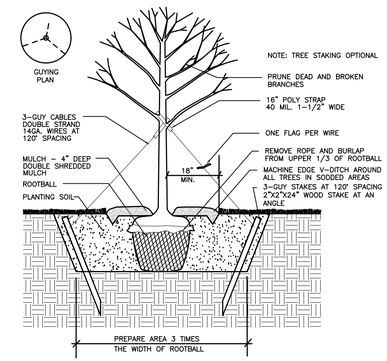

1 **TREE PLANTING DETAIL**
NOT TO SCALE

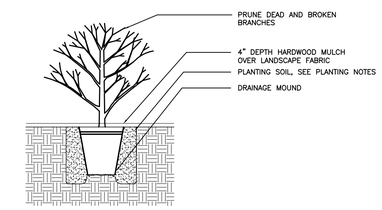

2 **SHRUB PLANTING DETAIL**
NOT TO SCALE

N

0 25 50 100
SCALE IN FEET

ALLIANT
733 Marquette Avenue
Suite 700
Minneapolis, MN 55402
612.758.3080
www.alliant-inc.com

CLUB WEST 11TH ADDITION
CHASKA, MINNESOTA
CONSTRUCTION DOCUMENTS
LANDSCAPE NOTES

I hereby certify that this plan, specification, or report was prepared by me or under my direct supervision and that I am a duly Licensed PROFESSIONAL ENGINEER under the laws of the State of MINNESOTA

DAVE NASH, PE
8/31/2022 — Date
21836 — License No.

QUALITY ASSURANCE/CONTROL

BY DATE

DATE	ISSUE
8/31/2022	CITY SUBMITTAL
11/29/2022	CITY RESUBMITTAL
12/28/2022	CITY RESUBMITTAL 1
1/11/2023	LOT 6 UPDATE 2
2/10/23	LOT 1 AND 6 UPDATE 3

PROJECT TEAM DATA

DESIGNED:	DN
DRAWN:	AA JP
PROJECT NO:	213–0121

Drawing name: X:\2013\130121\plan sheets\Final Plat\130121land.dwg Feb 10, 2023 – 11:57am

PLAT FILE NO.
C.R. DOC. NO

CLUB WEST ELEVENTH ADDITION

KNOW ALL PERSONS BY THESE PRESENTS: That Kusske Land Corporation, a Minnesota corporation, owner of the following described property, situated in the County of Carver, State of Minnesota, to wit:

Outlot A, KUSSKE ESTATES, according to the recorded plat thereof, Carver County, Minnesota:

Has caused the same to be surveyed and platted as CLUB WEST ELEVENTH ADDITION and does hereby dedicate to the public for public use the public ways and the drainage and utility easements as created by this plat.

In witness whereof said Kusske Land Corporation, a Minnesota corporation, has caused these presents to be signed by its proper officer this _____ day of _____, 20____.

Signed: Kusske Land Corporation

_____
Jason Kusske, President

STATE OF MINNESOTA
COUNTY OF _____

This instrument was acknowledged before me on _____ by Jason Kusske, President of Kusske Land Corporation, a Minnesota corporation, on behalf of the corporation.

_____

_____
Printed Name

Notary Public, _____ County, Minnesota
My Commission Expires _____

SURVEYOR'S CERTIFICATE

I Daniel P. Ekrem do hereby certify that this plat was prepared by me or under my direct supervision; that I am a duly Licensed Land Surveyor in the State of Minnesota; that this plat is a correct representation of the boundary survey; that all mathematical data and labels are correctly designated on this plat; that all monuments depicted on this plat have been, or will be correctly set within one year; that all water boundaries and wet lands, as defined in Minnesota Statutes, Section 505.01, Subd. 3, as of the date of this certificate are shown and labeled on this plat; and all public ways are shown and labeled on this plat.

Dated this ___ day of _____, 20____

_____
Daniel P. Ekrem, Licensed Land Surveyor
Minnesota License No. 57366

STATE OF MINNESOTA
COUNTY OF _____

This instrument was acknowledged before me on _____ by Daniel P. Ekrem, a Licensed Land Surveyor.

_____

_____
Printed Name

Notary Public, _____ County, Minnesota
My Commission Expires _____

CHASKA, MINNESOTA

This plat of CLUB WEST ELEVENTH ADDITION was approved and accepted by the City Council of the City of Chaska, Minnesota at a regular meeting thereof held this _____ day of _____, 20_____, and said plat is in compliance with the provisions of Minnesota Statutes, Section 505.03, Subd. 2.

City Council, City of Chaska, Minnesota

By: _____ _____
Mayor Clerk

COUNTY SURVEYOR, CARVER COUNTY, MINNESOTA

Pursuant to Chapter 395, Minnesota Laws of 1971, this plat has been approved this _____ day of _____, 20_____.

Brian E. Praske, County Surveyor

By: _____

COUNTY AUDITOR, CARVER COUNTY, MINNESOTA

I hereby certify that taxes payable in _____ and prior years have been paid for land described on this plat. Dated this _____ day of _____, 20_____.

Crystal Campos, County Auditor

By: _____

COUNTY RECORDER, CARVER COUNTY, MINNESOTA

I hereby certify that this plat of CLUB WEST ELEVENTH ADDITION was filed this _____ day of _____, 20_____, at _____ o'clock ___.M. as Document Number _____ .

Kaaren Lewis, County Recorder

By: _____

ALLIANT
ENGINEERING

PLAT FILE NO.
C.R. DOC. NO

CLUB WEST ELEVENTH ADDITION

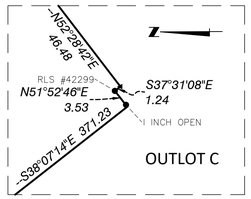

DETAIL
NOT TO SCALE

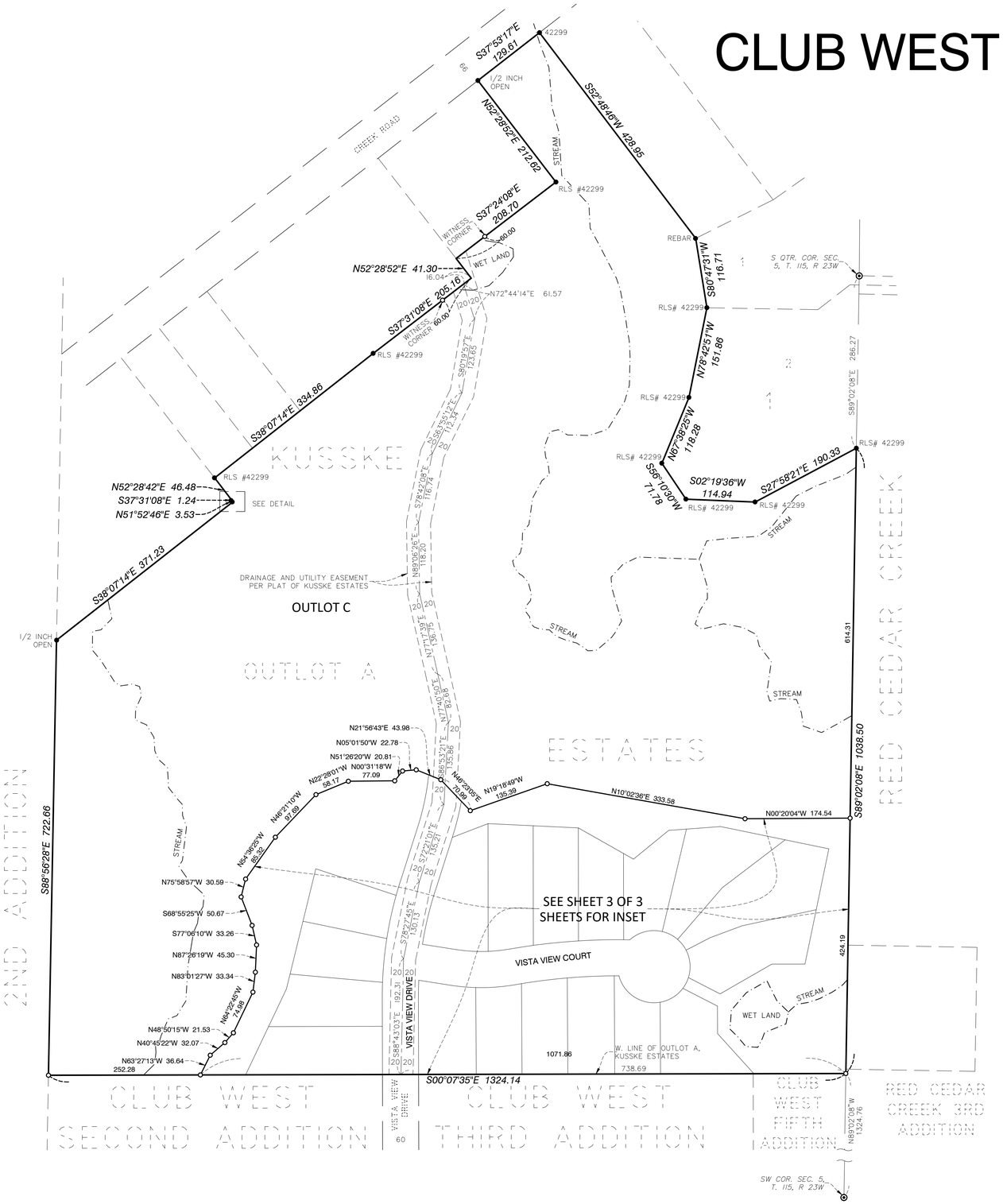

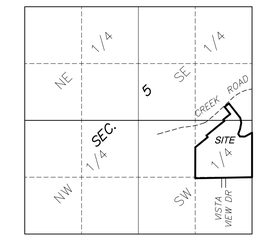

VICINITY MAP
SECTION 5, T115N, R23W
NOT TO SCALE

THE WEST LINE OF OUTLOT A, KUSSKE ESTATES, CARVER COUNTY, MINNESOTA, IS ASSUMED TO HAVE A BEARING OF S00°07'35"E

- ● Denotes monument found 1/2 inch iron pipe marked as shown
- ○ Denotes 1/2 inch x 18 inch iron monument set marked by license no. 57366 unless otherwise shown
- ▲ Denotes found nail

Scale in feet
0 100 150 200
ONE INCH EQUALS ONE HUNDRED FEET

ALLIANT ENGINEERING

PLAT FILE NO.
C.R. DOC. NO

CLUB WEST ELEVENTH ADDITION

INSET

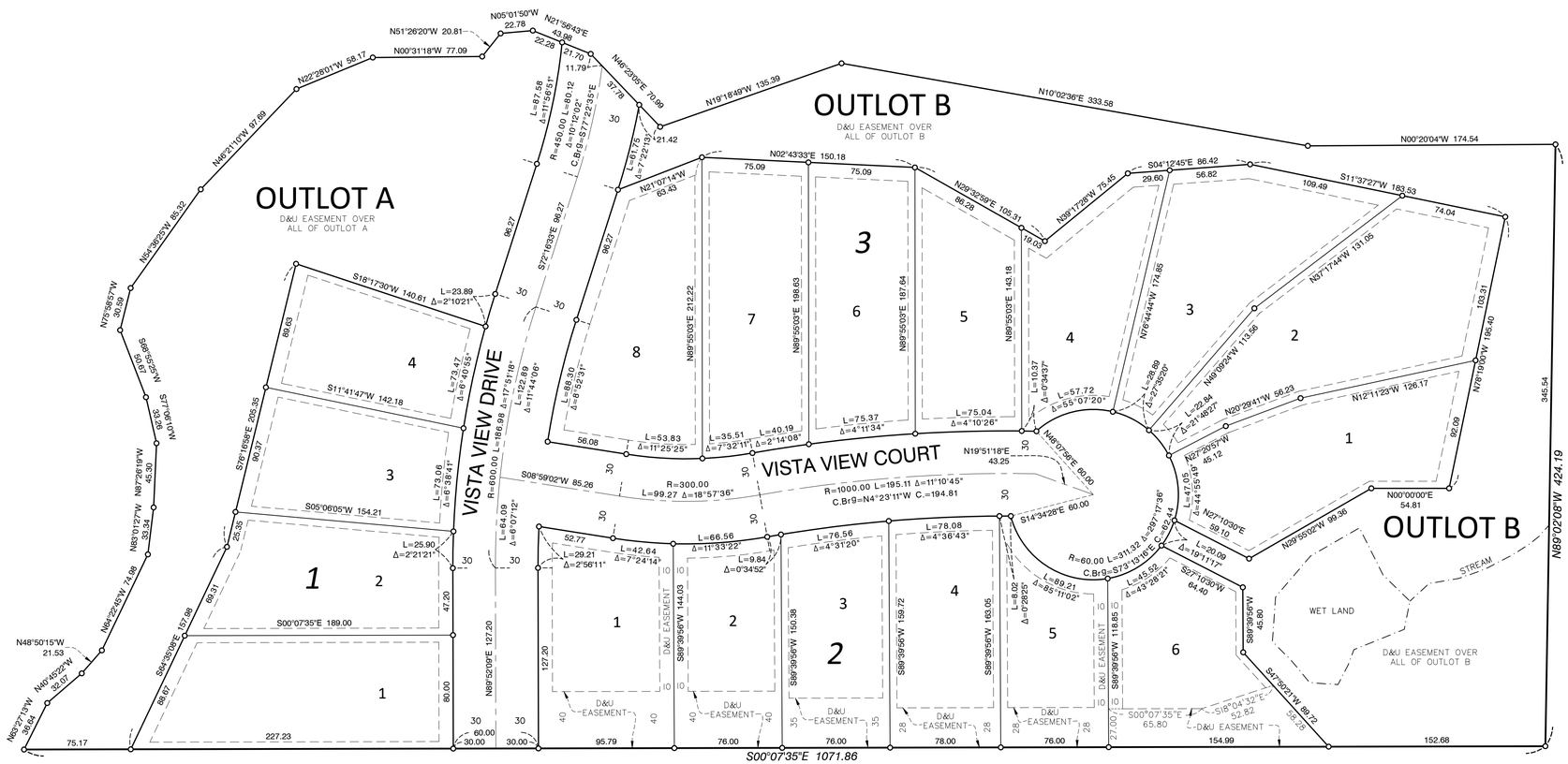

DRAINAGE AND UTILITY EASEMENTS ARE SHOWN THUS:

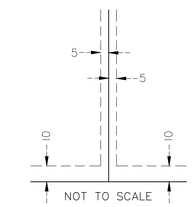

Being 5 feet in width and adjoining lot lines and 10 feet in width and adjoining right of way lines and rear lot lines, unless otherwise indicated on the plat.

THE WEST LINE OF OUTLOT A, KUSSKE ESTATES, CARVER COUNTY, MINNESOTA, IS ASSUMED TO HAVE A BEARING OF S00° 07'35"E

● Denotes monument found 1/2 inch iron pipe unless otherwise shown

○ Denotes 1/2 inch x 18 inch iron monument set marked by license no. 57366 unless otherwise shown

D&U Denotes drainage and utility easement

Scale in feet

0 50 100 150

ONE INCH EQUALS FIFTY FEET

ALLIANT ENGINEERING

REQUEST FOR ACTION
CHASKA CITY COUNCIL
February 27, 2023

Subject: **Adopt Resolution No. 2023-14 Ratifying 2023 Cogeneration and Small Power Production Tariff for the City's Electric Utility**

Prepared By: Noel Graczyk

Background

In accordance with Minnesota Statutes, the City must annually adopt rate tariffs for customers of Chaska electric that produce electric energy through cogeneration and small power production sources. These rate tariffs are established each year by City resolution. Cogeneration and small power rate tariffs apply to customers that generate electric energy through solar panels or other generation sources. As of December 2022, there are over 75 Chaska Electric customers eligible for these rate tariffs.

Each year, cogeneration and small power rate tariffs are determined based on actual sales for the prior January through December period. Rate tariffs as proposed for 2023 are based on actual 2022 sales by customer classification.

Update

Rate tariffs in the proposed resolution have been revised on Schedule 1 (Average Retail Utility Energy Rates) and Schedule 4 (Minnesota Municipal Power Agency Avoided Cost Rate Calculation Table) based on actual 2022 January through December sales by customer category.

Recommendation

Staff recommends adoption of the proposed resolution.

CITY COUNCIL ACTION REQUESTED

Motion to adopt Resolution No. 2023-14 Ratifying 2023 Cogeneration and Small Power Tariff for the City's Electric Utility.

CITY OF CHASKA
CARVER COUNTY, MINNESOTA

RESOLUTION

DATE February 27, 2023 **RESOLUTION NO. 2023-14**

MOTION BY COUNCILMEMBER_____SECOND BY COUNCILMEMBER_____

Resolution Ratifying 2023 Cogeneration and Small Power Production Tariff for the City's Electric Utility

---

WHEREAS, this resolution relates to the municipal electric utility (the "Utility") operated by the City of Chaska, Minnesota (the "City") that is governed by its City Council; and

WHEREAS, City rules and Minnesota Statutes Section 216B.164 require the City Council to annually adopt a Cogeneration and Small Power Production Tariff; and

WERERAS, on February 27, 2023, the City adopted rates applicable to cogeneration and small power production (the "Tariff Rates"); and

WHEREAS, the Minnesota Municipal Utility Association recently distributed suggested revisions to the resolutions its members use to adopt Tariff Rates; and

WHEREAS, an updated Cogeneration and Small Power Production Tariff ("Tariff") is attached to this resolution; and

WHEREAS, the City Council finds it is in the best interests of the Utility and its customers to update the Utility's Cogeneration and Small Power Production Tariff using the Tariff Rates previously adopted on February 27, 2023;

NOW, THEREFORE, BE IT RESOLVED by the City Council of the City of Chaska, Minnesota, that:

1. The Tariff attached to this resolution is hereby approved and adopted effective as of the date of this resolution.
2. The Tariff shall be maintained at Chaska City Hall and shall be made available for public inspection during normal business hours.

Passed and adopted by the City Council of the City of Chaska, Minnesota, this _____ day of _____, 2023.

_____
Mike Huang, Mayor Pro Tem

Attest:_____
Chaska Deputy Clerk

Cogeneration and Small Power Production Tariff

The City of Chaska, Minnesota ("City") operates a municipal electric utility that is governed by its City Council (the "Utility"). Pursuant to its Rules Governing the Interconnection of Cogeneration and Small Power Production Facilities, the City establishes and/or updates its Cogeneration and Small Power Production Tariff ("Tariff") for billing and sales transactions effective as of the date approved by resolution of the City Council as follows:

The Tariff shall consist of the following four schedules:

SCHEDULE 1: Calculation of average retail utility energy rates for each utility customer class.

SCHEDULE 2: Rates at which Utility purchases energy and capacity from the wholesale supplier from which purchases may first be avoided.

SCHEDULE 3: Utility's adopted interconnection process, or "distrusted generation tariff" per Minnesota Statues Section 216B.1611, subd. 3(2).

SCHEDULE 4: Minnesota Municipal Power Agency avoided cost rate calculation rate table.

Schedule 1

Average Retail Utility Energy Rates

Available to any Qualifying Facility of less than 40 kW capacity that does not select either Roll Over Credits, Simultaneous Purchase and Sale Billing or Time of Day rates.

Utility shall bill Qualifying Facilities for any excess of energy supplied by Utility above energy supplied by the Qualifying Facility during each billing period according to Utility's applicable rate schedule. Utility shall pay the customer for the energy generated by the Qualifying Facility that exceeds that supplied by Utility during a billing period at the "average retail utility energy rate." "Average retail utility energy rate" means, for any class of utility customer, the quotient of the total annual class revenue from sales of electricity minus the annual revenue resulting from fixed charges, divided by the annual class kilowatt-hour sales. Data from the most recent 12-month period available as of February 27, 2023, shall be used in the computation.

"Average retail utility energy rates" are as follows:

Customer Class	Average Retail Utility Energy Rate
Residential	$0.143069
Commercial	$0.098907
Industrial	$0.095915
Right of Way	5%

Schedule 2

Wholesale Supply Rates

A “non-generating utility” must list the rates at which it purchases energy and capacity. If the utility has more than one wholesale supplier, the rates listed are of that supplier from which purchases may first be avoided.

Utility purchases energy and capacity from Minnesota Municipal Power Agency. Last year, the average energy rate paid by Utility was $0.06854 per kilowatt-hour. The average capacity rate paid by Utility was $0.02187 per kilowatt-hour.

These rates are used to calculate Utility’s “avoided costs” for purposes of calculating compensation to customers whose Qualifying Facilities are not eligible for compensation at Utility’s average retail utility energy rate or who elect compensation at another rate.

Schedule 3

Interconnection Process

In order to provide for coordinated interconnection of customer-owned distributed energy resources and comply with Minnesota Statutes Section 216B.1611, subd. 3(2), Utility has adopted the "Minnesota Municipal Interconnection Process (M-MIP) 2022" as recognized by the Minnesota Municipal Utilities Association Board of Directors at its February 9, 2022, meeting and made publicly available at mmua.org.

The Utility's Rules Governing Interconnection of Cogeneration and Small Power Facilities (including a Uniform Contract for Cogeneration and Small Power Production Facilities) are available at www.chaskamn.com/solar.

General technical requirements may be found in the Minnesota Technical Interconnection and Interoperability Requirements (TIIR) as adopted by the Minnesota Public Utilities Commission on January 22, 2020 as part of DOCKET NO. E-999/CI-16-521.

For utility-specific safety standards, required operating procedures for interconnected operations, and the functions to be performed by any control and protective apparatus, please contact Utility for its Technical Specifications Manual (TSM).

Schedule 4

Minnesota Municipal Power Agency Avoided Cost Rate Calculation Table

	Energy ($/kWh)	Capacity ($/kWh)	REC ($/kWh)
Summer Months (June-Sept)			
On Peak	0.0526	0	0
Off Peak	0.0347	0	0
All Hours	0.0430	0	0
Winter Months (Oct-May)			
On Peak	0.0438	0	0
Off Peak	0.0343	0	0
All Hours	0.0387	0	0
Annual (January-December)	0.0401	0	0

REQUEST FOR ACTION
CHASKA CITY COUNCIL
02/27/2023

Subject: **Approve appointment of Heritage Preservation Commission Chair and Vice-Chair**

Prepared By: Elizabeth Hanson

BACKGROUND

Chaska Ordinance states that the City Council shall annually appoint the Heritage Preservation Commission Chairperson and Vice-Chair. By practice, the City Council has sought a recommendation from the Heritage Preservation Commission for the annual appointment.

Kristine Kohman is the current Chair. She was appointed on January 4, 2022.

Steve Mueller was appointed Vice-Chair on January 4, 2022

At their February 7th meeting, the Heritage Preservation Commission recommended that Kristine Kohman serve as the Chairperson of the Heritage Preservation Commission for the calendar year of 2023. They also recommended that Steve Mueller serve as the Vice-Chairperson of the Heritage Preservation Commission for the calendar year of 2023.

CITY COUNCIL ACTION REQUESTED:

Motion to approve Kristine Kohman to serve as Chairperson of the Heritage Preservation Commission for calendar year 2023.

Motion to approve Steve Mueller to serve as Vice-Chairperson of the Heritage Preservation Commission for calendar year 2023.

REQUEST FOR ACTION
CHASKA PLANNING COMMISSION
02/27/2023

Subject: Appointment of Planning Commission Chair and Vice-Chair

Prepared By: Nate Kabat

BACKGROUND

Chaska Ordinance states that the City Council shall annually appoint the Planning Commission Chairperson and Vice-Chair. By practice, the City Council has sought a recommendation from the Planning Commission for the annual appointment.

Rob Brass is the current Chair and was appointed by City Council on June 20, 2022 per the Planning Commission's recommendation following the resignation of previous Chair Brian Dahlke.

Carl Lacey was appointed Vice-Chair by City Council on June 20, 2022 per the Planning Commission's recommendation following Rob Brass's appointment to Chair. Mr. Lacey's term on the Planning Commission expired on December 31, 2022 and he chose not to apply for another term. As a result, the Vice-Chair position is currently vacant.

At its meeting on February 8, 2023, the Planning Commission made a motion to recommend Rob Brass to serve as Chairperson of the Planning Commission and to recommend Todd Urbanski to serve as Vice-Chairperson of the Planning Commission for calendar year 2023.

CITY COUNIL ACTION REQUESTED:

Motion to appoint Rob Brass to serve as Chairperson of the Planning Commission and Todd Urbanski as Vice-Chairperson of the Planning Commission for calendar year 2023.

REQUEST FOR ACTION
CHASKA CITY COUNCIL
February 27, 2023

Subject: **Audit Engagement Letter for 2022 Audit**

Prepared By: Noel Graczyk

Background

Currently, the City has a five-year proposal with MMKR, an independent accounting firm, to perform an annual audit of the City as required by State Statute. The audit for the 2022 fiscal year is the fourth year under the current proposal by MMKR. Each year as part of the annual audit, the City approves an Audit Engagement Letter with MMKR that outlines the understanding of services to be provided by the auditor.

Attached is a proposed Audit Engagement Letter with MMKR dated February 7, 2023 to audit the 2022 fiscal year ending December 31, 2022. This letter addresses the following components of the audit.

- Audit scope and objectives
- Auditor's responsibilities for the audit of the financial statements
- Audit procedures for internal controls and compliance
- Responsibilities of City Management for financial statements
- Audit engagement administration
- Other audit items to be addressed (e.g. Federal Single Audit)

Both the City and MMKR anticipate that a Federal Single Audit will not be needed as part of the annual audit for 2022. Instead, alternative Federal Attestation Requirements over Federal Funds spent by the City in 2022 will reduce the Federal audit scope. The proposed fee for the 2022 audit, without the need to complete a full Federal Single Audit, is $52,890 and includes fees and expenses.

Update

As part of the annual audit process, MMKR requires that an Audit Engagement Letter be reviewed and approved by the City Council.

Recommendation

Staff recommends that the proposed Audit Engagement Letter to audit the 2022 fiscal year be approved by the City Council and that the Mayor as a Council representative and City Administrator as a Management representative be authorized to sign the letter.

CITY COUNCIL ACTION REQUESTED

Motion to approve the 2022 Audit Engagement Letter with MMKR dated February 7, 2023, and authorize the Mayor and City Administrator to sign the Audit Engagement Letter.

MMKR
CERTIFIED PUBLIC ACCOUNTANTS

PRINCIPALS
Thomas A. Karnowski, CPA
Paul A. Radosevich, CPA
William J. Lauer, CPA
James H. Eichten, CPA
Aaron J. Nielsen, CPA
Victoria L. Holinka, CPA/CMA
Jaclyn M. Huegel, CPA
Kalen T. Karnowski, CPA

February 7, 2023

To the City Council and Management
of the City of Chaska
One City Hall Plaza
Chaska, MN 55318-1962

Dear Councilmembers and Management:

We are pleased to confirm our understanding of the services we are to provide the City of City of Chaska (the City) for the year ended December 31, 2022.

Audit Scope and Objectives

We will audit the financial statements of the governmental activities, the business-type activities, each major fund, and the aggregate remaining fund information, and the disclosures, which collectively comprise the basic financial statements of the City as of and for the year ended December 31, 2022. Accounting standards generally accepted in the United States of America (GAAP) provide for certain required supplementary information (RSI), such as management's discussion and analysis (MD&A), to supplement the City's basic financial statements. Such information, although not a part of the basic financial statements, is required by the Governmental Accounting Standards Board (GASB), who considers it to be an essential part of financial reporting for placing the basic financial statements in an appropriate operational, economic, or historical context. As part of our engagement, we will apply certain limited procedures to the City's RSI in accordance with auditing standards generally accepted in the United States of America (GAAS). These limited procedures will consist of inquiries of management regarding the methods of preparing the information and comparing the information for consistency with management's responses to our inquiries, the basic financial statements, and other knowledge we obtained during our audit of the basic financial statements. We will not express an opinion or provide any assurance on the information because the limited procedures do not provide us with sufficient appropriate evidence to express an opinion or provide any assurance. The following RSI is required by GAAP and will be subjected to certain limited procedures, but will not be audited:

1) MD&A
2) GASB-required pension and other post-employment benefits information

We have also been engaged to report on supplementary information other than RSI that accompanies the City's financial statements. We will subject the following supplementary information to the auditing procedures applied in our audit of the financial statements and certain additional procedures, including comparing and reconciling such information directly to the underlying accounting and other records used to prepare the financial statements or to the financial statements themselves, and other additional procedures in accordance with GAAS, and we will provide an opinion on it in relation to the financial statements as a whole in a separate written report accompanying our auditor's report on the financial statements OR in a report combined with our auditor's report on the financial statements:

1) Combining and individual fund statements and schedules

In connection with our audit of the basic financial statements, we will read the following other information and consider whether a material inconsistency exists between the other information and the basic financial statements, or the other information otherwise appears to be materially misstated. If, based on the work performed, we conclude that an uncorrected material misstatement of the other information exists, we are required to describe it in our report.

1) Introductory information
2) Statistical section

We will perform the required State Legal Compliance Audit conducted in accordance with auditing standards generally accepted in the United States of America and the provisions of the *Minnesota Legal Compliance Audit Guide*, promulgated by the State Auditor pursuant to Minnesota Statutes § 6.65, and will include such tests of the accounting records and other procedures we consider necessary to enable us to conclude that, for the items tested, the City has complied with the material terms and conditions of applicable legal provisions.

We will also prepare a management report for the City Council and administration. This report will communicate such things as our concerns regarding accounting procedures or policies brought to our attention during our audit, along with recommendations for improvements. The report will also contain certain financial comparisons and analysis, and a summary of legislative activity affecting Minnesota cities.

Our services will not include an audit in accordance with the Single Audit Act Amendments of 1996 and Title 2 U.S. Code of Federal Regulations Part 200, *Uniform Administrative Requirements, Cost Principles, and Audit Requirements for Federal Awards* (Uniform Guidance), which would only be required if the City expended $750,000 or more in federal assistance funds during the year. If the City is required to have a Single Audit of federal assistance funds, this engagement letter would need to be modified.

The objectives of our audit are to obtain reasonable assurance as to whether the financial statements as a whole are free from material misstatement, whether due to fraud or error; issue an auditor's report that includes our opinion about whether your financial statements are fairly presented, in all material respects, in conformity with GAAP; and report on the fairness of the supplementary information referred to in the second paragraph when considered in relation to the financial statements as a whole. Reasonable assurance is a high level of assurance but is not absolute assurance and, therefore, is not a guarantee that an audit conducted in accordance with GAAS and *Government Auditing Standards* will always detect a material misstatement when it exists. Misstatements, including omissions, can arise from fraud or error and are considered material if there is a substantial likelihood that, individually or in the aggregate, they would influence the judgment of a reasonable user made based on the financial statements.

The objectives also include reporting on internal control over financial reporting and compliance with provisions of laws, regulations, contracts, and award agreements, noncompliance with which could have a material effect on the financial statements in accordance with *Government Auditing Standards*.

Auditor's Responsibilities for the Audit of the Financial Statements

We will conduct our audit in accordance with GAAS and the standards for financial audits contained in *Government Auditing Standards*, issued by the Comptroller General of the United States, and will include tests of your accounting records of the City and other procedures we consider necessary to enable us to express such opinions. As part of an audit in accordance with GAAS and *Government Auditing Standards*, we exercise professional judgment and maintain professional skepticism throughout the audit.

We will evaluate the appropriateness of accounting policies used and the reasonableness of significant accounting estimates made by management. We will also evaluate the overall presentation of the financial statements, including the disclosures, and determine whether the financial statements represent the underlying transactions and events in a manner that achieves fair presentation. We will plan and perform the audit to obtain reasonable assurance about whether the financial statements are free of material misstatement, whether from (1) errors, (2) fraudulent financial reporting, (3) misappropriation of assets, or (4) violations of laws or governmental regulations that are attributable to the government or to acts by management or employees acting on behalf of the government. Because the determination of waste and abuse is subjective, *Government Auditing Standards* do not expect auditors to perform specific procedures to detect waste or abuse in financial audits nor do they expect auditors to provide reasonable assurance of detecting waste or abuse.

Because of the inherent limitations of an audit, combined with the inherent limitations of internal control, and because we will not perform a detailed examination of all transactions, there is an unavoidable risk that some material misstatements may not be detected by us, even though the audit is properly planned and performed in accordance with GAAS and *Government Auditing Standards*. In addition, an audit is not designed to detect immaterial misstatements or violations of laws or governmental regulations that do not have a direct and material effect on the financial statements. However, we will inform the appropriate level of management of any material errors, fraudulent financial reporting, or misappropriation of assets that comes to our attention. We will also inform the appropriate level of management of any violations of laws or governmental regulations that come to our attention, unless clearly inconsequential. Our responsibility as auditors is limited to the period covered by our audit and does not extend to any later periods for which we are not engaged as auditors.

We will also conclude, based on the audit evidence obtained, whether there are conditions or events, considered in the aggregate, that raise substantial doubt about the government's ability to continue as a going concern for a reasonable period of time.

Our procedures will include tests of documentary evidence supporting the transactions recorded in the accounts; and may include tests of the physical existence of inventories, and direct confirmation of receivables and certain assets and liabilities by correspondence with selected customers, creditors, and financial institutions. We will also request written representations from your attorneys as part of the engagement.

We have identified the following significant risk(s) of material misstatement as part of our audit planning:

1) Management override of controls
2) Revenue recognition
3) Constructed capital asset additions

At this time, audit planning has not concluded and modifications may be made to significant risks of material misstatement. If modifications are made, we will communicate them to you.

We may, from time to time and depending on the circumstances, use third party service providers in serving your account. We may share confidential information about you with these service providers but remain committed to maintaining the confidentiality and security of your information. Accordingly, we maintain internal policies, procedures, and safeguards to protect the confidentiality of your personal information. In addition, we will secure confidentiality agreements with all service providers to maintain the confidentiality of your information and we will take reasonable precautions to determine that they have appropriate procedures in place to prevent the unauthorized release of your confidential information to others. In the event that we are unable to secure an appropriate confidentiality agreement, you will be asked to provide your consent prior to the sharing of your confidential information with the third party service provider. Furthermore, we will remain responsible for the work provided by any such third party service providers.

Our audit of financial statements does not relieve you of your responsibilities.

Audit Procedures – Internal Control

We will obtain an understanding of the government and its environment, including internal control relevant to the audit, sufficient to identify and assess the risks of material misstatement of the financial statements, whether due to error or fraud, and to design and perform audit procedures responsive to those risks and obtain evidence that is sufficient and appropriate to provide a basis for our opinions. Tests of controls may be performed to test the effectiveness of certain controls that we consider relevant to preventing and detecting errors and fraud that are material to the financial statements and to preventing and detecting misstatements resulting from illegal acts and other noncompliance matters that have a direct and material effect on the financial statements. Our tests, if performed, will be less in scope than would be necessary to render an opinion on internal control and, accordingly, no opinion will be expressed in our report on internal control issued pursuant to *Government Auditing Standards*. The risk of not detecting a material misstatement resulting from fraud is higher than for one resulting from error, as fraud may involve collusion, forgery, intentional omissions, misrepresentation, or the override of internal control. An audit is not designed to provide assurance on internal control or to identify significant deficiencies or material weaknesses. Accordingly, we will express no such opinion. However, during the audit, we will communicate to management and those charged with governance internal control related matters that are required to be communicated under American Institute of Certified Public Accountants (AICPA) professional standards and *Government Auditing Standards*.

Audit Procedures – Compliance

As part of obtaining reasonable assurance about whether the financial statements are free of material misstatement, we will perform tests of the City's compliance with the provisions of applicable laws, regulations, contracts, agreements, and grants. However, the objective of our audit will not be to provide an opinion on overall compliance and we will not express such an opinion in our report on compliance issued pursuant to *Government Auditing Standards*.

Other Services

We will also assist in preparing the financial statements and related notes of the City in conformity with accounting principles generally accepted in the United States of America based on information provided by you. These nonaudit services do not constitute an audit under *Government Auditing Standards* and such services will not be conducted in accordance with *Government Auditing Standards*. We will perform the services in accordance with applicable professional standards. The other services are limited to the financial statement services previously defined. We, in our sole professional judgment, reserve the right to refuse to perform any procedure or take any action that could be construed as assuming management responsibilities.

Responsibilities of Management for the Financial Statements

Our audit will be conducted on the basis that you acknowledge and understand your responsibility for designing, implementing, establishing, and maintaining effective internal controls relevant to the preparation and fair presentation of financial statements that are free from material misstatement, whether due to fraud or error, and for evaluating and monitoring ongoing activities to help ensure that appropriate goals and objectives are met; following laws and regulations; and ensuring that management and financial information is reliable and properly reported. Management is also responsible for implementing systems designed to achieve compliance with applicable laws, regulations, contracts, and grant agreements. You are also responsible for the selection and application of accounting principles, for the preparation and fair presentation of the financial statements and all accompanying information in conformity with accounting principles generally accepted in the United States of America, and for compliance with applicable laws and regulations and the provisions of contracts and grant agreements.

Management is responsible for making drafts of financial statements, all financial records, and related information available to us and for the accuracy and completeness of that information (including information from outside of the general and subsidiary ledgers). You are also responsible for providing us with (1) access to all information of which you are aware that is relevant to the preparation and fair presentation of the financial statements, such as records, documentation, identification of all related parties and all related party relationships and transactions, and other matters; (2) additional information that we may request for the purpose of the audit; and (3) unrestricted access to persons within the government from whom we determine it necessary to obtain audit evidence. At the conclusion of our audit, we will require certain written representations from you about your responsibilities for the financial statements; compliance with laws, regulations, contracts, and grant agreements; and other responsibilities required by GAAS and *Government Auditing Standards*.

Your responsibilities include adjusting the financial statements to correct material misstatements and for confirming to us in the written representation letter that the effects of any uncorrected misstatements aggregated by us during the current engagement and pertaining to the latest period presented are immaterial, both individually and in the aggregate, to the financial statements of each opinion unit taken as a whole.

You are responsible for the design and implementation of programs and controls to prevent and detect fraud, and for informing us about all known or suspected fraud affecting the government involving (1) management, (2) employees who have significant roles in internal control, and (3) others where the fraud could have a material effect on the financial statements. Your responsibilities include informing us of your knowledge of any allegations of fraud or suspected fraud affecting the government received in communications from employees, former employees, grantors, regulators, or others. In addition, you are responsible for identifying and ensuring that the government complies with applicable laws, regulations, contracts, agreements, and grants and for taking timely and appropriate steps to remedy fraud and noncompliance with provisions of laws, regulations, or contracts or grant agreements that we report.

You are responsible for the preparation of the supplementary information, which we have been engaged to report on, in conformity with accounting principles generally accepted in the United States of America (GAAP). You agree to include our report on the supplementary information in any document that contains, and indicates that we have reported on, the supplementary information. You also agree to include the audited financial statements with any presentation of the supplementary information that includes our report thereon OR make the audited financial statements readily available to users of the supplementary information no later than the date the supplementary information is issued with our report thereon. Your responsibilities include acknowledging to us in the written representation letter that (1) you are responsible for presentation of the supplementary information in accordance with GAAP; (2) you believe the supplementary information, including its form and content, is fairly presented in accordance with GAAP; (3) the methods of measurement or presentation have not changed from those used in the prior period (or, if they have changed, the reasons for such changes); and (4) you have disclosed to us any significant assumptions or interpretations underlying the measurement or presentation of the supplementary information.

Management is responsible for establishing and maintaining a process for tracking the status of audit findings and recommendations. Management is also responsible for identifying and providing report copies of previous financial audits, attestation engagements, performance audits or other studies related to the objectives discussed in the Audit Scope and Objectives section of this letter. This responsibility includes relaying to us corrective actions taken to address significant findings and recommendations resulting from those audits, attestation engagements, performance audits, or other studies. You are also responsible for providing management's views on our current findings, conclusions, and recommendations, as well as your planned corrective actions, for the report, and for the timing and format for providing that information.

You agree to assume all management responsibilities for the financial statements and related notes and any other nonaudit services we provide. You will be required to acknowledge in the management representation letter our assistance with preparation of the financial statements and related notes and that you have reviewed and approved the financial statements and related notes prior to their issuance and have accepted responsibility for them. Further, you agree to oversee the nonaudit services by designating an individual, preferably from senior management, with suitable skill, knowledge, or experience; evaluate the adequacy and results of those services; and accept responsibility for them.

Engagement Administration, Fees, and Other

We understand that your employees will prepare all cash, accounts receivable, or other confirmations we request and will locate any documents selected by us for testing.

We will provide copies of our reports to the City; however, management is responsible for distribution of the reports and the financial statements. Unless restricted by law or regulation, or containing privileged and confidential information, copies of our reports are to be made available for public inspection.

The audit documentation for this engagement is the property of Malloy, Montague, Karnowski, Radosevich & Co., P.A. (MMKR) and constitutes confidential information. However, subject to applicable laws and regulations, audit documentation and appropriate individuals will be made available upon request and in a timely manner to a regulator agency or its designee, a federal agency providing direct or indirect funding, or the U.S. Government Accountability Office for the purposes of a quality review of the audit, to resolve audit findings, or to carry out oversight responsibilities. We will notify you of any such request. If requested, access to such audit documentation will be provided under the supervision of MMKR personnel. Furthermore, upon request, we may provide copies of selected audit documentation to the aforementioned parties. These parties may intend or decide to distribute the copies or information contained therein to others, including other governmental agencies.

The audit documentation for this engagement will be retained for a minimum of five years after the report release date or for any additional period requested by the regulatory agency. If we are aware that a federal awarding agency or auditee is contesting an audit finding, we will contact the party(ies) contesting the audit finding for guidance prior to destroying the audit documentation.

Jaclyn M. Huegel, CPA, is the engagement partner and is responsible for supervising the engagement and signing the reports or authorizing another individual to sign them. We expect to begin our audit shortly after the end of the fiscal year and to issue our report no later than June 30, 2023.

Our fees for these services will be at our standard hourly rates plus out-of-pocket costs (such as report reproduction, word processing, postage, travel, copies, telephone, etc.) except that we agree that our gross fee, including expenses, will not exceed $52,890. Our standard hourly rates vary according to the degree of responsibility involved and the experience level of the personnel assigned to your audit. Our invoices for these fees will be rendered each month as work progresses and are payable on presentation.

In accordance with our firm policies, work may be suspended if your account becomes 60 days or more overdue and may not be resumed until your account is paid in full. If we elect to terminate our services for nonpayment, our engagement will be deemed to have been completed upon written notification of termination, even if we have not completed our report(s). You will be obligated to compensate us for all time expended and to reimburse us for all out-of-pocket costs through the date of termination.

These fees are based on anticipated cooperation from your personnel and the assumption that unexpected circumstances will not be encountered during the audit. If we find that additional audit procedures are required, or if additional services are requested by the City, those services will be billed at our standard hourly rates. Additional audit procedures might be required for certain accounting issues or events, such as new contractual agreements, transactions and legal requirements of new bond issues, new funds, major capital projects, new tax increment districts, if there is an indication of misappropriation or misuse of public funds, or if significant difficulties are encountered due to the lack of accounting records, incomplete records, or turnover in the City's staff. If significant additional time is necessary, we will discuss it with you and arrive at a new fee estimate before we incur the additional costs.

Our audit engagement ends on delivery of our audit report. Any follow-up services that might be required will be a separate, new engagement. The terms and conditions of that new engagement will be governed by a new, specific engagement letter for that service.

With regard to the electronic dissemination of audited financial statements, including financial statements published electronically on your website, you understand that electronic sites are a means to distribute information and, therefore, we are not required to read the information contained in these sites or to consider the consistency of other information in the electronic site with the original document.

If you intend to publish or otherwise reproduce the financial statements, such as in a bond statement, and make reference to our firm name, you agree to provide us with printers' proofs or masters for our review and approval before printing. You also agree to provide us with a copy of the final reproduced material for our approval before it is distributed.

During the year, you might request additional services such as routine advice, assistance in implementing audit recommendations, review of your projections or budgets, and other similar projects. Independence standards allow us to perform these routine services; however, it is important that you understand that we are not allowed to make management decisions, perform management functions, nor can we audit our own work or provide nonaudit services that are significant to the subject matter of the audit.

Please be aware that e-mail is not a secure method of transmitting data. It can be intercepted, read, and possibly changed. Due to the large volume of e-mails sent daily, the likelihood of someone intercepting your e-mail is relatively small, but it does exist. We will communicate with you via e-mail, if you are willing to accept this risk.

To ensure that MMKR's independence is not impaired under the AICPA Code of Professional Conduct, you agree to inform the engagement partner before entering into any substantive employment discussions with any of our personnel.

If a dispute occurs related in any way to our services, our firm and the City agree to discuss the dispute and, if necessary, to promptly mediate in a good faith effort to resolve it. We will agree on a mediator, but if we cannot, either of us may apply to a court having personal jurisdiction over the parties for appointment of a mediator. We will share the mediator's fees and expenses equally, but otherwise will bear our own attorney fees and costs of the mediation. Participation in such mediation shall be a condition to either of us initiating litigation. To allow time for the mediation, any applicable statute of limitations shall be tolled for a period not to exceed 120 days from the date either of us first requests in writing to mediate the dispute.

The mediation shall be confidential in all respects, as allowed or required by law, except that our final settlement positions at mediation shall be admissible in litigation solely to determine the identity of the prevailing party for purposes of the awarding of attorney fees.

We both recognize the importance of performing our obligations under this agreement in a timely way and fully cooperating with the other. In the event that either of us fails to timely perform or fully cooperate, the other party may, in its sole discretion, elect to suspend performance or terminate the agreement regardless of the prejudice to the other person. We agree we will give 10 days' written notice of an intent to suspend or terminate, specifying the grounds for our decision, and will give the other an opportunity to cure the circumstances cited as grounds for that decision. In the event of suspension or termination, all fees and costs are immediately due on billing.

We agree that it is important that disputes be discussed and resolved promptly. For that reason, we agree that, notwithstanding any other statutes of limitations or court decisions concerning them, all claims either of us may have will be barred unless brought within one year of the date the complaining party first incurs any damage of any kind, whether discovered or not, related in any way to acts or omissions of the other party, whether or not the complaining party seeks recovery for that first damage and whether or not we have continued to maintain a business relationship after the first damage occurred. Notwithstanding anything in this letter to the contrary, we agree that regardless of where the City is located, or where this agreement is physically signed, this agreement shall have been deemed to have been entered into at our office in Hennepin County, Minnesota, and Hennepin County shall be the exclusive venue and jurisdiction for resolving disputes related to this agreement. This agreement shall be interpreted and governed under the laws of Minnesota.

When requested, *Government Auditing Standards* require that we provide you with a copy of our most recent external peer review report and any letter of comment, and any subsequent peer review reports and letters of comment received during the period of the contract. Our most recent peer review report accompanies this letter.

Reporting

We will issue a written report upon completion of our audit of the City's financial statements. Our report will be addressed to the City Council and management of the City. Circumstances may arise in which our report may differ from its expected form and content based on the results of our audit. Depending on the nature of these circumstances, it may be necessary for us to modify our opinions, add a separate section, or add an emphasis-of-matter or other-matter paragraph to our auditor's report, or if necessary, withdraw from this engagement. If our opinions are other than unmodified, we will discuss the reasons with you in advance. If, for any reason, we are unable to complete the audit or are unable to form or have not formed opinions, we may decline to express opinions or issue reports, or we may withdraw from this engagement.

We will also provide a report (that does not include an opinion) on internal control related to the financial statements and compliance with the provisions of laws, regulations, contracts, and grant agreements, noncompliance with which could have a material effect on the financial statements as required by *Government Auditing Standards*. The report on internal control and on compliance and other matters will state (1) that the purpose of the report is solely to describe the scope of testing of internal control and compliance, and the results of that testing, and not to provide an opinion on the effectiveness of the entity's internal control on compliance, and (2) that the report is an integral part of an audit performed in accordance with *Government Auditing Standards* in considering the entity's internal control and compliance. The report will also state that the report is not suitable for any other purpose. If during our audit we become aware that the City is subject to an audit requirement that is not encompassed in the terms of this engagement, we will communicate to management and those charged with governance that an audit in accordance with U.S. generally accepted auditing standards and the standards for financial audits contained in *Government Auditing Standards* may not satisfy the relevant legal, regulatory, or contractual requirements.

We will also provide a report (that does not include an opinion) on the City's compliance with applicable provisions of the *Minnesota Legal Compliance Audit Guide*, promulgated by the State Auditor pursuant to Minnesota Statutes § 6.65. The report will state (1) whether, in connection with our audit, anything came to our attention that caused us to believe that the City failed to comply with the applicable provisions of the *Minnesota Legal Compliance Audit Guide*, insofar as they relate to accounting matters, and (2) that the purpose of the report is solely to describe the scope of our testing of compliance and the results of that testing, and not to provide an opinion on compliance. The report will also state that the report is not suitable for any other purpose.

We appreciate the opportunity to be of service to the City and believe this letter accurately summarizes the significant terms of our engagement. If you have any questions, please let us know. If you agree with the terms of our engagement as described in this letter, please sign where indicated and email it to mmkr@mmkr.com.

Sincerely,

MALLOY, MONTAGUE, KARNOWSKI, RADOSEVICH & CO., P.A.

Jaclyn Huegel

Jaclyn M. Huegel, CPA
Principal

JMH:lmb

RESPONSE:

This letter correctly sets forth the understanding of the City of Chaska.

City Council Representative		City Management Representative	
By:	_____	By:	_____
Title:	_____	Title:	_____
Date:	_____	Date:	_____

KerberRose

Report on the Firm's System of Quality Control

To the Principals of Malloy, Montague, Karnowski, Radosevich & Co., P.A. and the Peer Review Committee of the Minnesota Society of CPAs

We have reviewed the system of quality control for the accounting and auditing practice of Malloy, Montague, Karnowski, Radosevich & Co., P.A. (the firm) in effect for the year ended May 31, 2022. Our peer review was conducted in accordance with the Standards for Performing and Reporting on Peer Reviews established by the Peer Review Board of the American Institute of Certified Public Accountants (Standards).

A summary of the nature, objectives, scope, limitations of, and the procedures performed in a system review as described in the Standards may be found at www.aicpa.org/prsummary. The summary also includes an explanation of how engagements identified as not performed or reported on in conformity with applicable professional standards, if any, are evaluated by a peer reviewer to determine a peer review rating.

Firm's Responsibility

The firm is responsible for designing and complying with a system of quality control to provide the firm with reasonable assurance of performing and reporting in conformity with the requirements of applicable professional standards in all material respects. The firm is also responsible for evaluating actions to promptly remediate engagements deemed as not performed or reported on in conformity with the requirements of applicable professional standards, when appropriate, and for remediating weaknesses in its system of quality control, if any.

Peer Reviewer's Responsibility

Our responsibility is to express an opinion on the design of and compliance with the firm's system of quality control based on our review.

Required Selections and Considerations

Engagements selected for review included engagements performed under *Government Auditing Standards,* including compliance audits under the Single Audit Act and an audit of an employee benefit plan.

As part of our peer review, we considered reviews by regulatory entities as communicated by the firm, if applicable, in determining the nature and extent of our procedures.

Opinion

In our opinion, the system of quality control for the accounting and auditing practice of Malloy, Montague, Karnowski, Radosevich & Co., P.A. in effect for the year ended May 31, 2022 has been suitably designed and complied with to provide the firm with reasonable assurance of performing and reporting in conformity with applicable professional standards in all material respects. Firms can receive a rating of *pass, pass with deficiency(ies) or fail.* Malloy, Montague, Karnowski, Radosevich & Co., P.A. has received a peer review rating of *pass.*

Kerber Rose SC

September 29, 2022

KerberRose S.C.
www.kerberrose.com

P: (920) 993-0105
4211 N. Lightning Drive, Appleton, WI 54913

REQUEST FOR ACTION
CHASKA CITY COUNCIL
02/27/2023

Subject: **Zoning Ordinance Amendment (ZOA) – Shoreland Management (CMCO Chapter 15.24)**

Applicant: City of Chaska

Case No.: 2023-07

Synopsis: The City is requesting to amend the Shoreland Management zoning section

Prepared By: Elizabeth Hanson

Staff Recommendation: Motion to adopt Ordinance

BACKGROUND

On May 18, 2022 the City of Chaska received a letter from the DNR informing the City that the shoreland ordinance needs updates. The DNR noticed that there are shoreland areas (i.e. watercourses) that are not currently listed in the city's ordinance. In addition, they noticed that the shoreland classifications for watercourses are older classifications and these need to be updated to reflect current classifications.

The DNR has given the City one year (deadline of May 18, 2023) to respond and revise the shoreland ordinance to be in compliance with state statutes. The City is responding to this and providing the applicable revisions in the shoreland ordinance in accordance with their letter dated May 18, 2022.

It is possible that the DNR may require more revisions beyond what are being shown in their letter and the amended ordinance. If more revisions are required then the City will address that as a part of the City's zoning audit that is active now. In the meantime, the City will provide the immediate revisions as noted in the letter.

CURRENT REQUEST

The request is to amend the City's shoreland management ordinance (Section 15.24) to be in compliance with state statute. The amendments proposed are listed below and reflected in the draft ordinance.

- Amendment will add certain watercourses:
  - Assumptions Creek
  - Unnamed Creek
  - Unnamed Stream
- Amendment will add new classifications:
  - Tributaries
  - Agricultural

- Amendment will reclassify watercourses:
    - Reclassify West & East Chaska Creeks from General Development to Tributaries

To show where these added watercourses are located, the City has created a map. The map is attached in the packet.

In sum, the added watercourses to the shoreland management ordinance should have minimal effect on the City's development. The Unnamed Stream on the north side of the City is in an already developed area. Some of the stream crosses over Rural Residential area that is already built on; if additional development were to occur then the effected areas would be evaluated at that time. The Unnamed Creek is within a ravine area that has preservation measures already in place. Assumption Creek is located in the southeast area of Chaska mainly within a planned open space area. There are a couple of vacant areas that are within the shoreland management area, and that will be evaluated at the time development occurs.

PLANNING COMMISSION ACTION TAKEN 02/08/2023:
Motion to recommend approval of the Zoning Ordinance Amendment that would modify Section 15.24 (Shoreland Management) of the Zoning Ordinance to read as the attached draft Ordinance.

CITY COUNCIL ACTION REQUESTED
Motion to adopt Ordinance No. 1031 approving the Zoning Ordinance Amendment to modify Section 15.24 (Shoreland Management) of the Zoning Ordinance.

MINNESOTA DEPARTMENT OF NATURAL RESOURCES
CENTRAL OFFICE
500 LAFAYETTE ROAD, BOX 25
SAINT PAUL, MN 55155
651-296-6157
888-646-6367

May 18, 2022

Mark Windschitl, Mayor
Chaska City Hall
One City Hall Plaza
Chaska, MN 55318

Re: Notice to Amend Shoreland Management Ordinance Due to Annexations

Dear Mayor Windschitl,

On behalf of the Department of Natural Resources (DNR), I am writing to inform you that information discovered during review of a recent annexation indicates that the City of Chaska will need to amend its shoreland ordinance.

The DNR recently received correspondence from the Minnesota Office of Administrative Hearings - Municipal Boundary Adjustments Unit, approving annexation of land to the City of Chaska (A-2205(OA)-34)). This annexation was approved by joint resolution between the City of Chaska and Laketown Township, adopted by the City on March 21, 2022, and approved by the State of Minnesota on March 31, 2022.

Although this current annexation does not include any shoreland areas not included in the City's ordinance, the DNR has determined that previously annexed lands included shoreland areas that are not listed in the City's ordinance. The shoreland areas include lands adjacent to several watercourses which are not referenced in the city's current shoreland ordinance. Minnesota Statutes Section 414.033, Subd. 11, requires communities that have recently annexed such areas to be in compliance with Minnesota Statutes 103F. Minnesota Statutes, Section 103F.221, Subd. 1 requires any municipality to adopt an ordinance that is substantially compliant with the shoreland standards and criteria **within one year of this notification**. As such, the city must amend its shoreland ordinance to include these waterbodies.

These watercourses and their associated shoreland classifications are:

Water Body Name	DNR Classification	From	To
Minnesota River	Agricultural	9-115-23	3-115-23
Assumption Creek	Tributary	34-116-23	34-116-23
Unnamed creek	Tributary	6-115-23	6-115-23
Unnamed stream	Tributary	19-116-23	20-116-23

In addition, the following two classified basins are within 1000 feet of the current municipal boundaries of Chaska. Therefore, there is shoreland within the city. In addition, these basins are currently in Jackson Township in Scott County, and could be annexed by one or the surrounding cities. Therefore, the DNR recommends that these basins be added to the shoreland ordinance as well:

Water Body Name	DOW Lake ID Number	DNR Classification
Nyssens Lake	70011600	Natural Environment
Gifford Lake	70011800	Natural Environment

Finally, the shoreland classifications for the watercourses that are shown in Chaska's shoreland ordinance are the older watercourse shoreland classifications. In 1989, the DNR adopted a new shoreland classification system for watercourses. The ordinance should be updated with the current shoreland classifications for East and West Chaska Creeks. Both of these are currently listed as General Development and should be changed to "Tributary". The lot width standards and structure setback standards for Tributary and Agricultural shoreland classifications should also be added to the ordinance.

The process for preparing and submitting a shoreland management ordinance for DNR approval is explained at http://www.dnr.state.mn.us/waters/watermgmt_section/shoreland/adopt-amend-ordinances.html. If there are other portions of your shoreland ordinance you would like to address during this amendment process, we recommend you reference suggested language from the Shoreland Management Model Ordinance. There is a link to the model ordinance at the top of the web page. Please submit your draft ordinance and completed checklist to ordinance.review.dnr@state.mn.us and copy me at taylor.huinker@state.mn.us within **six months of the date of this letter to meet the one-year timeframe outlined above**. I will be available to answer any questions you may have regarding your shoreland ordinance, or any other DNR water- related programs or permits.

Sincerely,

Taylor Huinker

Taylor Huinker
Area Hydrologist

c: Noel Graczyk, Administrative Services Director
Dan Lais, EWR Region 3 District Manager
ordinance.review.dnr@state.mn.us

City of Chaska - Shoreland District Overlay

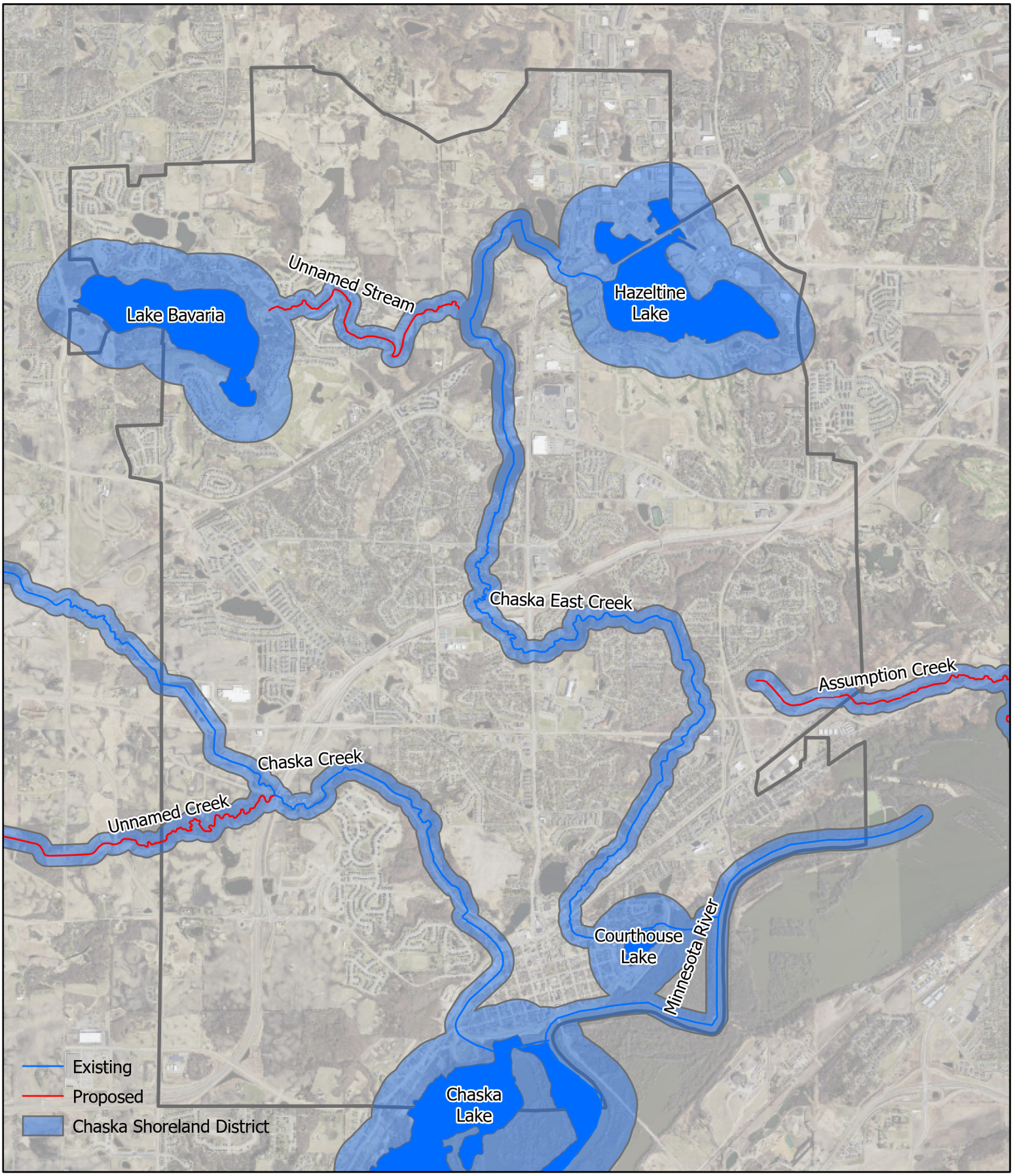

By: Brent Alcott, Water Resources Coordinator
Date: January 18, 2023

0 0.38 0.75 1.5 Miles

N

CITY OF CHASKA
ORDINANCE 2023-1031

WHEREAS, staff recommends the Shoreland Management ordinance be amended.

NOW THEREFORE, be it ordained by the Council of the City of Chaska, in the State of Minnesota, as follows:

SECTION 1: **AMENDMENT** "15.24.020 Designation Of Types Of Land Use" of the City of Chaska Zoning Code is hereby *amended* as follows:

BEFORE AMENDMENT

15.24.020 Designation Of Types Of Land Use

A. *Shoreland Management Classification*. In order to guide the wise development and utilization of shorelands of protected waters for the preservation of water quality, natural characteristics, economic values and the general health, safety and welfare, certain protected waters in the City have been given a shoreland management classification.

These protected waters of the City have been classified by the Commissioner of Natural Resources as follows:

Natural Environment	DNR I.D. #
Chaska Lake	10-4
Courthouse Lake	10-5

General Development	OHWM	DNR I.D. #
Hazeltine Lake	916.8	10-14
Lake Bavaria	972.7	10-19
West Chaska Creek		N/A
East Chaska Creek		N/A

B. *Shoreland Overlay District*. The shorelands of the City of Chaska are hereby designated as a Shoreland Overlay District. The purpose of the Shoreland Overlay District is to provide for the wise utilization of shoreland areas in order to preserve the quality and natural character of these protected waters of the City.

1. *Permitted Uses*. All permitted uses allowed and regulated by the applicable zoning district underlying this shoreland overlay district as indicated on the Official Zoning Map of the City.
2. *Conditional Uses*. All conditional uses and applicable attached conditions allowed and regulated by the applicable zoning district underlying this shoreland overlay district as indicated on the Official Zoning Map of the City and as required by CZO 15.24.040.
3. *Substandard Uses*. Any uses of shorelands in existence prior to the date of enactment of this Ordinance which are permitted within the applicable zoning district, but do not meet the minimum lot area, setbacks or other dimensional requirements of this Ordinance are substandard uses. Substandard uses, including substandard sanitary facilities, shall be allowed to continue. However, any structural alteration or addition to a substandard use which will increase the substandard dimensions shall not be allowed.
4. *Prohibited Uses*. Any uses which are not Permitted or Conditional Uses as regulated by the applicable zoning district underlying this shoreland overlay district as indicated on the Official Zoning Map of the City are prohibited.

AFTER AMENDMENT

15.24.020 Designation Of Types Of Land Use

A. *Shoreland Management Classification*. In order to guide the wise development and utilization of shorelands of protected waters for the preservation of water quality, natural characteristics, economic values, and the general health, safety and welfare, certain protected waters in the City have been given a shoreland management classification.

These protected waters of the City have been classified by the Commissioner of Natural Resources as follows:

Natural Environment	**DNR I.D. #**
Chaska Lake	10000-400
Courthouse Lake	10000-500

General Development	**OHWM**	**DNR I.D. #**
Hazeltine Lake	916.8	1000-1400
Lake Bavaria	972.7	1000-1900
~~West Chaska Creek~~		~~N/A~~
~~East Chaska Creek~~		~~N/A~~

Tributary	DNR I.D.	**From**	**To**
Assumption Creek	M-055-017	34-116-23	34-116-2
East Chaska Creek	M-055-018		
West Chaska Creek	M-055-020		
Unnamed Creek	M-055-020-001	6-115-23	6-115-23
Unnamed Stream	M-055-018-006	19-116-23	20-116-23

Agricultural	**From**	**To**
Minnesota River	9-115-23	3-115-23

A. *Shoreland Overlay District*. The shorelands of the City of Chaska are hereby designated as a Shoreland Overlay District. The purpose of the Shoreland Overlay District is to provide for the wise utilization of shoreland areas in order to preserve the quality and natural character of these protected waters of the City.

1. *Permitted Uses*. All permitted uses allowed and regulated by the applicable zoning district underlying this shoreland overlay district as indicated on the Official Zoning Map of the City.
2. *Conditional Uses*. All conditional uses and applicable attached conditions allowed and regulated by the applicable zoning district underlying this shoreland overlay district as indicated on the Official Zoning Map of the City and as required by CZO 15.24.040.
3. *Substandard Uses*. Any uses of shorelands in existence prior to the date of enactment of this Ordinance which are permitted within the applicable zoning district, but do not meet the minimum lot area, setbacks or other dimensional requirements of this Ordinance are substandard uses. Substandard uses, including substandard sanitary facilities, shall be allowed to continue. However, any structural alteration or addition to a substandard use which will increase the substandard dimensions shall not be allowed.
4. *Prohibited Uses*. Any uses which are not Permitted or Conditional Uses as regulated by the applicable zoning district underlying this shoreland overlay district as indicated on the Official Zoning Map of the City are prohibited.

SECTION 2: **AMENDMENT** "15.24.030 Zoning Provisions" of the City of Chaska Zoning Code is hereby *amended* as follows:

BEFORE AMENDMENT

15.24.030 Zoning Provisions

A. *Standards - All Shorelands*. The following standards shall apply to all shorelands of the protected waters listed in CZO 15.24.020 within the City. Where the requirements of the underlying zoning district as shown on the Official Zoning Map are more restrictive than those set forth herein, then the more restrictive standards shall apply:

	NATURAL ENVIRONMENT WATERS	**RECREATIONAL DEVELOPMENT WATERS**	**GENERAL DEVELOPMENT WATERS**
1. Unsewered Areas			
Lot Area (in square feet)	80,000	40,000	20,000
Water frontage and lot width at building line (in feet)	200	150	100
Structure setback from Ordinary High Water Mark (in feet)	200	100	75
Structure setback from roads and highways	50: Federal, State, or County 30: Municipal or Private		
Structure height limitation (in feet)		35	
Maximum lot area covered by impervious surface (in %)	30	30	30
Sewage system setback from Ordinary High Water Mark (in feet)	150	75	50
2. Sewered Areas			
Lot Area (in square feet) Water front lots Other lots	 40,000 20,000	 20,000 15,000	 15,000 10,000
Water frontage and lot width at building line (in feet)	125	75	75
Structure setback from Ordinary High Water Mark (in feet)	150	75	50

B. *Substandard Lots*.

1. *Lots of Record*.
    a. Lots of record in the office of the County Register of Deeds prior to March 4, 1985 which do not meet the requirements of paragraph A may be allowed as building sites, provided:
        (1) Such use is permitted in the zoning district.
        (2) The lot is in separate ownership from abutting lands, and
        (3) All other sanitary and dimensional requirements of this shoreland ordinance are complied with insofar as practical.
    b. The minimum size and length of water frontage for substandard lots of record shall be:

        9,000 square feet with 75 feet frontage

C. *Roads And Parking Areas*. Roads and parking areas shall be located to retard the runoff of surface waters and nutrients in accordance with the following criteria:
    1. *Setbacks - Roads/Parking Areas*. Where feasible and practical, all roads and parking areas shall meet the setback requirements established for structures in paragraph A.
    2. *Minimum Setbacks - High Water Mark*. In no instance shall these impervious surfaces be placed less than 50 feet from the ordinary high water mark.
    3. *Screening - Parking Areas*. Natural vegetation or other natural materials shall be used to screen parking areas when viewed from the water.

D. *Elevation Of Lowest Floor*.
    1. *Elevation Consistency/Flood Plain Management*. Structures shall be placed at an elevation consistent with the City's flood plain management controls.
    2. *Lowest Floor Elevation Determination*. In areas not regulated by flood plain management controls, the elevation to which the lowest floor, including basements, is to be placed shall be determined as follows:
        a. For lakes, ponds, and flowages by:
            (1) An evaluation of available flood information and consistent with Statewide Standards and Criteria for Management of Flood Plain Areas of Minnesota; or
            (2) Placing the lowest floor at a level at least three feet above the highest known water level. In those instances where sufficient data on known high water levels are not available, the ordinary high water mark shall be used.
        b. For rivers and streams, by an evaluation of available flood information and consistent with Statewide Standards and Criteria for Management of Flood Plain Areas of Minnesota.

E. *Exceptions To Structure Setback Requirements*.
    1. *Exceptions from Setbacks*. Setback requirements from the ordinary high water mark shall not apply to piers and docks. Location of piers and docks shall be controlled by applicable state and local regulations.
    2. *Developed/Undeveloped Lots/Minimum Setback*. On undeveloped shoreland lots that have two (2) adjacent lots with existing principal structures on both such adjacent lots, any new residential structure may be set back the average

setback of the adjacent structures from the ordinary high water mark or 50 feet, whichever is greater, provided all other provisions of the shoreland overlay district are complied with.

AFTER AMENDMENT

15.24.030 Zoning Provisions

A. *Standards - All Shorelands*. The following standards shall apply to all shorelands of the protected waters listed in CZO 15.24.020 within the City. Where the requirements of the underlying zoning district as shown on the Official Zoning Map are more restrictive than those set forth herein, then the more restrictive standards shall apply:

	NATURAL ENVIRONMENT WATERS	**RECREATIONAL DEVELOPMENT WATERS**	**GENERAL DEVELOPMENT WATERS**	TRIBUTARY WATERCOURSES	AGRICULTURAL WATERCOURSES
1. Unsewered Areas					
Lot Area (in square feet)	80,000	40,000	20,000		
Water frontage and lot width at building line (in feet)	200	150	100	100	150
Structure setback from Ordinary High Water Mark (in feet)	200	100	75	100	100
Structure setback from roads and highways	50: Federal, State, or County 30: Municipal or Private				
Structure height limitation (in feet)		35			
Maximum lot area covered by impervious surface (in %)	30	30	30		
Sewage system setback from Ordinary High	150	75	50	75	75

Water Mark (in feet)					
2. Sewered Areas					
Lot Area (in square feet) Water front lots Other lots	40,000 20,000	20,000 15,000	15,000 10,000		
Water frontage and lot width at building line (in feet)	125	75	75	75	150
Structure setback from Ordinary High Water Mark (in feet)	150	75	50	50	50

B. *Substandard Lots*.

1. *Lots of Record*.

a. Lots of record in the office of the County Register of Deeds prior to March 4, 1985 which do not meet the requirements of paragraph A may be allowed as building sites, provided:

(1) Such use is permitted in the zoning district.

(2) The lot is in separate ownership from abutting lands, and

(3) All other sanitary and dimensional requirements of this shoreland ordinance are complied with insofar as practical.

b. The minimum size and length of water frontage for substandard lots of record shall be:

9,000 square feet with 75 feet frontage

C. *Roads And Parking Areas*. Roads and parking areas shall be located to retard the runoff of surface waters and nutrients in accordance with the following criteria:

1. *Setbacks - Roads/Parking Areas*. Where feasible and practical, all roads and parking areas shall meet the setback requirements established for structures in paragraph A.
2. *Minimum Setbacks - High Water Mark*. In no instance shall these impervious surfaces be placed less than 50 feet from the ordinary high water mark.
3. *Screening - Parking Areas*. Natural vegetation or other natural materials shall be used to screen parking areas when viewed from the water.

D. *Elevation Of Lowest Floor*.

1. *Elevation Consistency/Flood Plain Management*. Structures shall be placed at an elevation consistent with the City's flood plain management controls.
2. *Lowest Floor Elevation Determination*. In areas not regulated by flood plain

management controls, the elevation to which the lowest floor, including basements, is to be placed shall be determined as follows:

a. For lakes, ponds, and flowages by:
   (1) An evaluation of available flood information and consistent with Statewide Standards and Criteria for Management of Flood Plain Areas of Minnesota; or
   (2) Placing the lowest floor at a level at least three feet above the highest known water level. In those instances where sufficient data on known high water levels are not available, the ordinary high water mark shall be used.
b. For rivers and streams, by an evaluation of available flood information and consistent with Statewide Standards and Criteria for Management of Flood Plain Areas of Minnesota.

E. *Exceptions To Structure Setback Requirements*.

1. *Exceptions from Setbacks*. Setback requirements from the ordinary high water mark shall not apply to piers and docks. Location of piers and docks shall be controlled by applicable state and local regulations.
2. *Developed/Undeveloped Lots/Minimum Setback*. On undeveloped shoreland lots that have two (2) adjacent lots with existing principal structures on both such adjacent lots, any new residential structure may be set back the average setback of the adjacent structures from the ordinary high water mark or 50 feet, whichever is greater, provided all other provisions of the shoreland overlay district are complied with.

PASSED AND ADOPTED BY THE CITY OF CHASKA COUNCIL _____.

	AYE	**NAY**	**ABSENT**	**ABSTAIN**
Councilmember Grau	_____	_____	_____	_____
Councilmember Hatfield	_____	_____	_____	_____
Councilmember Huang	_____	_____	_____	_____
Councilmember Hubbard	_____	_____	_____	_____
Mayor Windschitl	_____	_____	_____	_____

Presiding Officer

_____
Mike Huang, Mayor Pro Tem,
City of Chaska

Attest

_____
Denise Beebe, Senior Clerk, City of Chaska

CITY OF CHASKA
ORDINANCE 2023-1031

WHEREAS, staff recommends the Shoreland Management ordinance be amended.

NOW THEREFORE, be it ordained by the Council of the City of Chaska, in the State of Minnesota, as follows:

SECTION 1: **AMENDMENT** "15.24.020 Designation Of Types Of Land Use" of the City of Chaska Zoning Code is hereby *amended* as follows:

BEFORE AMENDMENT

15.24.020 Designation Of Types Of Land Use

A. *Shoreland Management Classification*. In order to guide the wise development and utilization of shorelands of protected waters for the preservation of water quality, natural characteristics, economic values and the general health, safety and welfare, certain protected waters in the City have been given a shoreland management classification.

These protected waters of the City have been classified by the Commissioner of Natural Resources as follows:

Natural Environment	DNR I.D. #
Chaska Lake	10-4
Courthouse Lake	10-5

General Development	OHWM	DNR I.D. #
Hazeltine Lake	916.8	10-14
Lake Bavaria	972.7	10-19
West Chaska Creek		N/A
East Chaska Creek		N/A

B. *Shoreland Overlay District*. The shorelands of the City of Chaska are hereby designated as a Shoreland Overlay District. The purpose of the Shoreland Overlay District is to provide for the wise utilization of shoreland areas in order to preserve the quality and natural character of these protected waters of the City.

1. *Permitted Uses*. All permitted uses allowed and regulated by the applicable zoning district underlying this shoreland overlay district as indicated on the Official Zoning Map of the City.
2. *Conditional Uses*. All conditional uses and applicable attached conditions allowed and regulated by the applicable zoning district underlying this shoreland overlay district as indicated on the Official Zoning Map of the City and as required by CZO 15.24.040.
3. *Substandard Uses*. Any uses of shorelands in existence prior to the date of enactment of this Ordinance which are permitted within the applicable zoning district, but do not meet the minimum lot area, setbacks or other dimensional requirements of this Ordinance are substandard uses. Substandard uses, including substandard sanitary facilities, shall be allowed to continue. However, any structural alteration or addition to a substandard use which will increase the substandard dimensions shall not be allowed.
4. *Prohibited Uses*. Any uses which are not Permitted or Conditional Uses as regulated by the applicable zoning district underlying this shoreland overlay district as indicated on the Official Zoning Map of the City are prohibited.

AFTER AMENDMENT

15.24.020 Designation Of Types Of Land Use

A. *Shoreland Management Classification*. In order to guide the wise development and utilization of shorelands of protected waters for the preservation of water quality, natural characteristics, economic values, and the general health, safety and welfare, certain protected waters in the City have been given a shoreland management classification.

These protected waters of the City have been classified by the Commissioner of Natural Resources as follows:

Natural Environment	**DNR I.D. #**
Chaska Lake	10000400
Courthouse Lake	10000500

General Development	**OHWM**	**DNR I.D. #**
Hazeltine Lake	916.8	10001400
Lake Bavaria	972.7	10001900

Tributary	DNR I.D.	**From**	**To**
Assumption Creek	M-055-017	34-116-23	34-116-2
East Chaska Creek	M-055-018		
West Chaska Creek	M-055-020		
Unnamed Creek	M-055-020-001	6-115-23	6-115-23
Unnamed Stream	M-055-018-006	19-116-23	20-116-23

Agricultural	**From**	**To**
Minnesota River	9-115-23	3-115-23

A. *Shoreland Overlay District*. The shorelands of the City of Chaska are hereby designated as a Shoreland Overlay District. The purpose of the Shoreland Overlay District is to provide for the wise utilization of shoreland areas in order to preserve the quality and natural character of these protected waters of the City.
    1. *Permitted Uses*. All permitted uses allowed and regulated by the applicable zoning district underlying this shoreland overlay district as indicated on the Official Zoning Map of the City.
    2. *Conditional Uses*. All conditional uses and applicable attached conditions allowed and regulated by the applicable zoning district underlying this shoreland overlay district as indicated on the Official Zoning Map of the City and as required by CZO 15.24.040.
    3. *Substandard Uses*. Any uses of shorelands in existence prior to the date of enactment of this Ordinance which are permitted within the applicable zoning district, but do not meet the minimum lot area, setbacks or other dimensional requirements of this Ordinance are substandard uses. Substandard uses, including substandard sanitary facilities, shall be allowed to continue. However, any structural alteration or addition to a substandard use which will increase the substandard dimensions shall not be allowed.
    4. *Prohibited Uses*. Any uses which are not Permitted or Conditional Uses as regulated by the applicable zoning district underlying this shoreland overlay district as indicated on the Official Zoning Map of the City are prohibited.

SECTION 2: **<u>AMENDMENT</u>** "15.24.030 Zoning Provisions" of the City of Chaska Zoning Code is hereby *amended* as follows:

BEFORE AMENDMENT

15.24.030 Zoning Provisions

A. *Standards - All Shorelands*. The following standards shall apply to all shorelands of the protected waters listed in CZO 15.24.020 within the City. Where the requirements of the underlying zoning district as shown on the Official Zoning Map are more restrictive than those set forth herein, then the more restrictive standards shall apply:

	NATURAL ENVIRONMENT WATERS	**RECREATIONAL DEVELOPMENT WATERS**	**GENERAL DEVELOPMENT WATERS**
1. Unsewered Areas			
Lot Area (in square feet)	80,000	40,000	20,000
Water frontage and lot width at building line (in feet)	200	150	100
Structure setback from Ordinary High Water Mark (in feet)	200	100	75
Structure setback from roads and highways	50: Federal, State, or County 30: Municipal or Private		
Structure height limitation (in feet)		35	
Maximum lot area covered by impervious surface (in %)	30	30	30
Sewage system setback from Ordinary High Water Mark (in feet)	150	75	50
2. Sewered Areas			
Lot Area (in square feet) Water front lots Other lots	 40,000 20,000	 20,000 15,000	 15,000 10,000
Water frontage and lot width at building line (in feet)	125	75	75
Structure setback from Ordinary High Water Mark (in feet)	150	75	50

B. *Substandard Lots*.

1. *Lots of Record*.

a. Lots of record in the office of the County Register of Deeds prior to March 4, 1985 which do not meet the requirements of paragraph A may be allowed as building sites, provided:

(1) Such use is permitted in the zoning district.

(2) The lot is in separate ownership from abutting lands, and

(3) All other sanitary and dimensional requirements of this shoreland ordinance are complied with insofar as practical.

b. The minimum size and length of water frontage for substandard lots of record shall be:

9,000 square feet with 75 feet frontage

C. *Roads And Parking Areas*. Roads and parking areas shall be located to retard the runoff of surface waters and nutrients in accordance with the following criteria:

1. *Setbacks - Roads/Parking Areas*. Where feasible and practical, all roads and parking areas shall meet the setback requirements established for structures in paragraph A.

2. *Minimum Setbacks - High Water Mark*. In no instance shall these impervious surfaces be placed less than 50 feet from the ordinary high water mark.

3. *Screening - Parking Areas*. Natural vegetation or other natural materials shall be used to screen parking areas when viewed from the water.

D. *Elevation Of Lowest Floor*.

1. *Elevation Consistency/Flood Plain Management*. Structures shall be placed at an elevation consistent with the City's flood plain management controls.

2. *Lowest Floor Elevation Determination*. In areas not regulated by flood plain management controls, the elevation to which the lowest floor, including basements, is to be placed shall be determined as follows:

a. For lakes, ponds, and flowages by:

(1) An evaluation of available flood information and consistent with Statewide Standards and Criteria for Management of Flood Plain Areas of Minnesota; or

(2) Placing the lowest floor at a level at least three feet above the highest known water level. In those instances where sufficient data on known high water levels are not available, the ordinary high water mark shall be used.

b. For rivers and streams, by an evaluation of available flood information and consistent with Statewide Standards and Criteria for Management of Flood Plain Areas of Minnesota.

E. *Exceptions To Structure Setback Requirements*.

1. *Exceptions from Setbacks*. Setback requirements from the ordinary high water mark shall not apply to piers and docks. Location of piers and docks shall be controlled by applicable state and local regulations.

2. *Developed/Undeveloped Lots/Minimum Setback*. On undeveloped shoreland lots that have two (2) adjacent lots with existing principal structures on both

such adjacent lots, any new residential structure may be set back the average setback of the adjacent structures from the ordinary high water mark or 50 feet, whichever is greater, provided all other provisions of the shoreland overlay district are complied with.

AFTER AMENDMENT

15.24.030 Zoning Provisions

A. *Standards - All Shorelands*. The following standards shall apply to all shorelands of the protected waters listed in CZO 15.24.020 within the City. Where the requirements of the underlying zoning district as shown on the Official Zoning Map are more restrictive than those set forth herein, then the more restrictive standards shall apply:

	NATURAL ENVIRONMENT WATERS	**RECREATIONAL DEVELOPMENT WATERS**	**GENERAL DEVELOPMENT WATERS**	TRIBUTARY WATERCOURSES	AGRICULTURAL WATERCOURSES
1. Unsewered Areas					
Lot Area (in square feet)	80,000	40,000	20,000		
Water frontage and lot width at building line (in feet)	200	150	100	100	150
Structure setback from Ordinary High Water Mark (in feet)	200	100	75	100	100
Structure setback from roads and highways	50: Federal, State, or County 30: Municipal or Private				
Structure height limitation (in feet)		35			
Maximum lot area covered by impervious surface (in %)	30	30	30		
Sewage system setback from					

Ordinary High Water Mark (in feet)	150	75	50	75	75
2. Sewered Areas					
Lot Area (in square feet) Water front lots Other lots	40,000 20,000	20,000 15,000	15,000 10,000		
Water frontage and lot width at building line (in feet)	125	75	75	75	150
Structure setback from Ordinary High Water Mark (in feet)	150	75	50	50	50

B. *Substandard Lots*.

1. *Lots of Record*.

a. Lots of record in the office of the County Register of Deeds prior to March 4, 1985 which do not meet the requirements of paragraph A may be allowed as building sites, provided:

(1) Such use is permitted in the zoning district.

(2) The lot is in separate ownership from abutting lands, and

(3) All other sanitary and dimensional requirements of this shoreland ordinance are complied with insofar as practical.

b. The minimum size and length of water frontage for substandard lots of record shall be:

9,000 square feet with 75 feet frontage

C. *Roads And Parking Areas*. Roads and parking areas shall be located to retard the runoff of surface waters and nutrients in accordance with the following criteria:

1. *Setbacks - Roads/Parking Areas*. Where feasible and practical, all roads and parking areas shall meet the setback requirements established for structures in paragraph A.
2. *Minimum Setbacks - High Water Mark*. In no instance shall these impervious surfaces be placed less than 50 feet from the ordinary high water mark.
3. *Screening - Parking Areas*. Natural vegetation or other natural materials shall be used to screen parking areas when viewed from the water.

D. *Elevation Of Lowest Floor*.

1. *Elevation Consistency/Flood Plain Management*. Structures shall be placed at

an elevation consistent with the City's flood plain management controls.

2. *Lowest Floor Elevation Determination*. In areas not regulated by flood plain management controls, the elevation to which the lowest floor, including basements, is to be placed shall be determined as follows:
    a. For lakes, ponds, and flowages by:
        (1) An evaluation of available flood information and consistent with Statewide Standards and Criteria for Management of Flood Plain Areas of Minnesota; or
        (2) Placing the lowest floor at a level at least three feet above the highest known water level. In those instances where sufficient data on known high water levels are not available, the ordinary high water mark shall be used.
    b. For rivers and streams, by an evaluation of available flood information and consistent with Statewide Standards and Criteria for Management of Flood Plain Areas of Minnesota.

E. *Exceptions To Structure Setback Requirements*.

1. *Exceptions from Setbacks*. Setback requirements from the ordinary high water mark shall not apply to piers and docks. Location of piers and docks shall be controlled by applicable state and local regulations.
2. *Developed/Undeveloped Lots/Minimum Setback*. On undeveloped shoreland lots that have two (2) adjacent lots with existing principal structures on both such adjacent lots, any new residential structure may be set back the average setback of the adjacent structures from the ordinary high water mark or 50 feet, whichever is greater, provided all other provisions of the shoreland overlay district are complied with.

PASSED AND ADOPTED BY THE CITY OF CHASKA COUNCIL
_____.

	AYE	NAY	ABSENT	ABSTAIN
Councilmember Grau	_____	_____	_____	_____
Councilmember Hatfield	_____	_____	_____	_____
Councilmember Huang	_____	_____	_____	_____
Councilmember Hubbard	_____	_____	_____	_____
Mayor Windschitl	_____	_____	_____	_____

Presiding Officer

_____
Mike Huang, Mayor Pro Tem,
City of Chaska

Attest

_____
Denise Beebe, Senior Clerk, City of Chaska

REQUEST FOR ACTION
CHASKA CITY COUNCIL
02/27/2023

Subject: **Amending 2022 and 2023 Fund Budgets**

Reviewed By: **Noel Graczyk, Administrative Services Director**

Prepared By: **Matt Burt, Accountant II**

Background
In 2022 and prior years, Parks and Recreation operational revenues and expenses have been tracked through the Community Center Fund rather than the General Fund. Staff has identified the ability to transfer these revenues and expenses into the General Fund for better financial reporting while having a net zero impact on 2022 and 2023 budgets in both funds. Excess revenues over expenses that the Parks and Recreation programming earned in 2022 will be paid back to the Community Center for use of spaces they occupy for programming activities, which results in those rooms not being able to be rented out by other parties.

Recommendation
Staff recommends adoption of the proposed resolution.

CITY COUNCIL ACTION REQUESTED
Motion to adopt Resolution 2023-15 Amending 2022 Fund Budgets and 2023-16 Amending 2023 Fund Budgets.

CITY OF CHASKA
CARVER COUNTY, MINNESOTA

RESOLUTION

DATE February 27, 2023 RESOLUTION NO. 2023-15

MOTION BY COUNCILMEMBER_____ SECOND BY COUNCILMEMBER_____

Resolution Amending 2022 Fund Budgets

WHEREAS, the City Council, on December 20, 2021, adopted Resolution No. 2021-92 adopting the 2022 Budget; and,

WHEREAS, the City Council previously adopted the following budget amendments:

- August 1, 2022 – Res. 2022-96

WHEREAS, budget amendments to the General Fund and Chaska Community Center Fund have been identified to reflect adjusted revenues and expenditures as estimated for 2022.

NOW, THEREFORE, BE IT RESOLVED, by the City Council of the City of Chaska, Minnesota, that the following amendments to the 2022 Budget be adopted:

2022 Budget	Revenues and Other Sources	Expenditures and Other Uses	Net Increase (Decrease)
General Fund (Fund 101)	$21,724,729	$21,724,729	$0
Increases	307,060	307,060	0
Decreases	0	0	0
Amended Fund Budget	$22,031,789	$22,031,789	$0

2022 Budget	Revenues and Other Sources	Expenditures and Other Uses	Net Increase (Decrease)
Chaska Community Center Fund (Fund 604)	$4,244,673	$4,529,623	$(284,950)
Increases	80,164	0	80,164
Decreases	307,060	226,896	(80,164)
Amended Fund Budget	$4,017,777	$4,302,727	$(284,950)

Passed and adopted by the City Council of the City of Chaska, Minnesota, this 27th day of February, 2023.

_____
Mike Huang, Mayor Pro Tem

Attest:_____
Chaska Deputy Clerk

CITY OF CHASKA
CARVER COUNTY, MINNESOTA

RESOLUTION

DATE February 27, 2023 RESOLUTION NO. 2023-16

MOTION BY COUNCILMEMBER_____ SECOND BY COUNCILMEMBER_____

Resolution Amending 2023 Fund Budgets

WHEREAS, the City Council, on December 19, 2022, adopted Resolution No. 2022-147 adopting the 2023 Budget; and,

WHEREAS, budget amendments to the General Fund and Chaska Community Center Fund have been identified to reflect adjusted revenues and expenditures as estimated for 2022.

NOW, THEREFORE, BE IT RESOLVED, by the City Council of the City of Chaska, Minnesota, that the following amendments to the 2023 Budget be adopted:

2023 Budget	Revenues and Other Sources	Expenditures and Other Uses	Net Increase (Decrease)
General Fund (Fund 101)	$24,635,215	$24,635,215	$0
Increases	301,274	301,274	0
Decreases	0	0	0
Amended Fund Budget	$24,936,489	$24,936,489	$0

2023 Budget	Revenues and Other Sources	Expenditures and Other Uses	Net Increase (Decrease)
Chaska Community Center Fund (Fund 604)	$4,761,062	$4,833,534	$(72,472)
Increases	150,176	0	150,176
Decreases	301,274	151,098	(150,176)
Amended Fund Budget	$4,609,964	$4,682,436	$(72,472)

Passed and adopted by the City Council of the City of Chaska, Minnesota, this 27th day of February, 2023.

_____
Mike Huang, Mayor Pro Tem

Attest:_____
Chaska Deputy Clerk

REQUEST FOR ACTION
CHASKA CITY COUNCIL
2/27/2023

Subject: **Downtown Chaska TH 41/CSAH 61 – Underpass and Recreational Trail Permit Agreement**

Prepared By: Matt Clark, City Engineer

This year's Downtown Chaska TH 41/CSAH 61 project includes the new pedestrian underpass tunnel, retaining walls, storm water system, sidewalks, lighting and other facilities to accommodate a multi-use pedestrian trail under highway 41. The trail improvements are located within the Carver County Regional Rail Authority right of way which requires an agreement between agencies. The attached agreement allows for the City to construct the funded trail improvements with maintenance once complete to being held with the City. The agreement also recognizes an extension of the regional destination trail is planned in the near future which at that time ownership and maintenance of this portion of the trail will be revisited since the trail is a part of the Minnesota River Regional Bluffs Regional Trail system.

The next phase for the missing link of regional trail throughout downtown is in the planning and design stage for a project scheduled in 2024. The trail extension will begin near Athletic Park and will connect to the levee ravine trail system near Stoughton Avenue.

Staff is recommending the Council authorize the mayor and administrator execute the agreement in its current form for the improvements to occur this summer with the TH 41/CSAH 61 project. As noted in the agreement, the terms for ownership and maintenance will be revisited when the trail project is extended.

CITY COUNCIL ACTION REQUESTED

Motion to authorize the Mayor and Administrator to execute the Underpass and Recreational Trail Permit Agreement for the Downtown Chaska TH 41/CSAH 61 Improvement Project.

UNDERPASS AND RECREATIONAL TRAIL PERMIT AGREEMENT

Chaska Downtown Highway 41 Project
Project Numbers: S.P. 1008-87 (TH41)
S.P. 196-010-017
S.P. 196-010-018
S.P. 196-020-014
CCRRA Real Property: Tax Property Identification Number 309990500

THIS UNDERPASS AND RECREATIONAL TRAIL PERMIT AGREEMENT, ("Permit Agreement"), is made by and entered into between the Carver County Regional Railroad Authority, a political subdivision and local government unit organized and existing under the laws of the State of Minnesota, ("CCRRA"), and acting through the Carver County Board of Commissioners, ("County Board"), and the City of Chaska, a political subdivision and local government unit organized under the laws of the State of Minnesota, ("City"). The CCRRA and the City sometimes are referred to separately hereinafter as a "Party," and sometimes are referred to collectively hereinafter as the "Parties."

1. RECITALS

WHEREAS, the Union Pacific Railroad Company, a Delaware Corporation, ("UP"), owned approximately 5.6 miles of a railroad line which ran from Louisville in Scott County, Minnesota, through Carver in Carver County, Minnesota, and into Chaska, Carver County, Minnesota, ("Chaska Industrial Lead").

WHEREAS, a portion of the Chaska Industrial Lead is located in the City of Chaska, Minnesota and is legally described in Exhibit B, attached hereto, and incorporated herein, ("Property").

WHEREAS, the UP entered into several legally binding agreements with the private and public utilities listed in Exhibit A, attached hereto, and incorporated herein, which allow said utilities to cross and be upon designated portions of the Chaska Industrial Lead ("Utility Agreements").

WHEREAS, the UP filed an application for abandonment of the Chaska Industrial Lead with the Surface Transportation Board, ("STB").

WHEREAS, the UP served and published a notice of said application in the *Federal Register* on January 2, 2008, (73 Fed. Reg. 224), ("Notice"), and therein instructed any persons opposing the abandonment who wished to participate in the abandonment process to file a protest and comments with the STB.

WHEREAS, the STB received timely protests from the United Sugar Corporation and the United Transportation Union.

WHEREAS, the CCRRA filed a request with the STB for the issuance of a Certificate of Interim Trail Use under the National Trails System Act, 16 U.S.C. 1247(d), ("Trails Act").

WHEREAS, the STB granted the UP's application for abandonment of the Chaska Industrial Lead in 2008, subject to, in part, a trail use condition authorizing the CCRRA to negotiate an interim trail use/ rail banking agreement with the UP for the right-of-way.

WHEREAS, the UP submitted an environmental report with its application for abandonment of the Chaska Industrial Lead, and notified appropriate Federal, state, and local agencies of the opportunity to submit information concerning the environmental impact of the proposed abandonment.

WHEREAS, the STB's Section of Environmental Analysis, ("SEA"), examined the UP's environmental report, verified its data, and considered comments submitted to the SEA regarding the UP's report, and found that, as conditioned, the abandonment would not significantly affect the quality of the human environment.

WHEREAS, the UP conveyed the Property to the County of Carver, a political subdivision and local government unit organized and existing under the laws of the State of Minnesota, ("County"), by Donation Quick Claim Deed, which was recorded in the Carver County Recorder's Office on October 21, 2011 as Document Number A544096.

WHEREAS, said conveyance to the County was made in accordance with and subject to the National Trails Systems Act, 16 U.S.C. § 1247(d), ("Trails Act") and the terms and conditions contained in the Decision and Certificate of Interim Trail Use or Abandonment served on April 1, 2008, by the Surface Transportation Board in STB Docket Number AB-33, (Sub-No. 255), ("CITU"), as extended by Decision served on September 12, 2008, March 30, 2009, June 9, 2009, and September 2, 2010, (the conditions of the Trails Act and the CITU are collectively referred to herein as the "Terms and Conditions").

WHEREAS, said Terms and Conditions run with the land of the Property; include a condition that the rights-of-ways of the Property must be preserved for future railroad purposes or other transportation system purposes, ("Transportation Uses"); and further provide that the Property may be used for public recreational trail use in the interim.

WHEREAS, the County conveyed the Property to the CCRRA by Limited Warranty Deed, which was recorded in the Carver County Recorder's Office on April 23, 2013, as Document Number A575561, subject to the Terms and Conditions and the Utility Agreements.

WHEREAS, the City, the County, and the Minnesota Department of Transportation developed construction plans to reconstruct, expand, and improve a portion of Minnesota State Highway 41 and County State Aid Highway ("CSAH") 61, a/k/a Chaska Boulevard, in

downtown Chaska, Minnesota, said plans which are dated June 3, 2022, ("Plans"), as part of the City's Downtown Highway 41 Project, S.P. 1008-87 (TH 41), S.P. 196-010-017, S.P. 196-010-018, and S.P. 196-020-014, S.P. 010-661-008 (CSAH 61) ("Project").

WHEREAS, in part, the Plans provide for the City to make specified improvements on the Property, ("Trail Improvement Plans"), said improvements which include but are not limited to the removal of existing drainage facilities; the construction of a pedestrian and bicycle underpass under Trunk Highway 41, between Fifth Street and CSAH 61, ("Underpass"); the construction of retaining walls and sidewalks ("Sidewalks"); the construction of a new drainage pond and drainage system; the construction of a lift station; the establishment of new turf, erosion control measures, and vegetation; the installation of lighting; and the construction of a public recreational trail for pedestrian and bicycle uses ("Trail"), collectively referred to herein as the "Permit Trail Improvements."

WHEREAS, the CCRRA disclosed the Utility Agreements to the City, and the City had a sufficient opportunity to review said agreements.

WHEREAS, the CCRRA disclosed the City a Phase I Environmental Site Assessment Report, a Phase II Environmental Site Assessment Report of the Chaska Industrial Lead, and a Response Action Plan of the Chaska Industrial Lead which were prepared by AMEC Environment & Infrastructure for the Minnesota Pollution Control Agency ("Environmental Reports") to the City, and the City had a sufficient opportunity to review the Environmental Reports.

WHEREAS, at an undetermined time in the future, the City will extend the Trail onto CCRRA's real property, which is adjacent to the Permit Tract, as part of a separate improvement project of the City, ("Future Trail Extension"), whereupon the Parties intend for the structure of the Underpass, the Trail, and the Future Trail Extension to be incorporated into the Minnesota River Bluffs Regional Trail system ("Future Trail Use").

WHEREAS, the Parties intend to later enter into separate legally binding agreements with one another, and with the County, to transfer some of Chaska's maintenance and operation obligations under this Permit Agreement, ("Transfer of Obligations"), to either the CCRRA or to the County, and to delineate the rights and responsibilities of the City, the CCRRA, and the County related to the City's construction of the Future Trail Extension.

WHEREAS, the Transfer of Obligations shall include, but shall not be limited to, the transfer of the City's maintenance and operation obligations of the structure of the Underpass, the Trail, and the Permit Tract, and shall exclude, in part, the City's maintenance and operation obligations of the lift station, the Sidewalks, and any drainage systems.

WHEREAS, the CCRRA desires to grant to the City, a non-exclusive permit or right to use the Property, for interim public recreational trail purposes and other appurtenant uses thereto, ("Trail Permit").

2. AGREEMENT

NOW, THEREFORE, in consideration of the mutual promises, and other good and valuable consideration, the receipt and sufficiency of which the Parties herby acknowledge to be sufficient, and by which the Parties intend to be legally bound, the Parties agree and stipulate as follows:

2.1 **Recitals**. The Recitals set forth above are true and correct and are incorporated into and made part of this Permit Agreement in their entirety by this reference.

2.2 **Grant of Permanent Permit**. The CCRRA hereby bargains, grants, and conveys to the City, its successors, and assigns, a Trail Permit over, under, and across, upon, and through the portion of the Property which is identified by Tax Parcel Identification Number 309990500; legally described in Exhibit C; and generally depicted in Exhibit D; both exhibits attached hereto and incorporated herein, "(Permit Tract"), subject to the Utility Agreements, and the Terms and Conditions, and in accordance with the terms of this Permit Agreement.

2.3 **No Conveyance of Any Real Property Rights.** The Parties understand, acknowledge, and agree that this Permit Agreement and the Trail Permit does not convey to the City any real property rights whatsoever over, under, across, upon and through the Permit Tract or any portion of the Property that is located beyond the physical boundaries of the Permit Tract, including but not limited to, any curbs, curb cuts, parking lots, any existing improvements that are located on the Permit Tract, or any other future improvements associated with the Future Trail Extension that may be located beyond the physical boundaries of said Permit Tract.

2.3 **Rights of City's Parties within Permit Tract**. During the Term of this Trail Permit, the City, its officers, employees, agents, contractors, sub-permittees, and invitees for public recreational trail purposes, ("City's Parties"), shall have the right to enter and be upon and use said Permit Tract in accordance with the Trail Improvement Plans, and any amendments to the Trail Improvement Plans approved in writing by the CCRRA, and for any purposes related to the following:

A. Temporarily placing supplies, material, and equipment on the Permit Tract during the inspection, construction, maintenance, repair, and replacement of the Permit Trail Improvements, said improvements which include but shall not be limited to grading, the removal and installation of drainage utilities, the relocation of any existing utilities, the installation of a bituminous surface on the Trail, the construction of retaining walls and Sidewalks, the construction of a lift station, the installation of lighting, the construction of the Underpass, and the installation of the other Permit Trail Improvements, and other elements.

B. Inspecting, constructing, maintaining, repairing, and replacing any of the Permit Trail Improvements.

C. Removing earth and vegetation such as bushes, trees, and undergrowth in the Permit Tract, and other vegetative obstructions within the Permit Tract that may from time to time interfere with the City's inspection, construction, maintenance, repair, replacement and use of the Permit Trail Improvements.

D. Mowing and maintaining grass and trimming and pruning trees.

E. Removing graffiti, debris, garbage, and other materials unrelated to the construction of the Permit Trail Improvements, and water, snow, and ice from the Permit Tract.

F. Using the Trail for public recreational trail purposes, including for pedestrian biking purposes, and using the Sidewalk adjacent to the Trail only for pedestrian purposes, and for any other uses as may be permitted or consistent with the applicable provisions of the City and County Ordinances.

2.5 **Sub-Permits**. The City shall have the right to grant sub-permits on the same terms and conditions, and for the same uses contained in this Permit Agreement, provided the CCRRA has approved of the proposed said sub-permits in writing. The CCRRA may not unreasonably withhold, condition, or delay said approval.

2.6 **Signage**.

A. Any Signs in addition to those identified in the Trail Improvement Plans that the City desires to install within the Permit Tract must be approved by the CCRRA in writing before the installation of the Signs within the Permit Tract. The CCRRA may not unreasonably withhold, condition, or delay said approval.

2.7 **City's Obligations with Permit Tract**.

A. Trail Improvement Plans

(1) The City shall be responsible for the design and construction of all Permit Trail Improvements necessary for its permitted uses of the Permit Tract and shall be solely responsible for the maintenance and operation of the Permit Trail Improvements during the Term of this Permit Agreement and until -select maintenance and operation obligations are transferred to CCRRA by a separate written agreement between the Parties ("Future Trail Agreement").

(2) The City shall also be responsible for the construction, maintenance, and operation of all City bridges and crossings within the Permit Tract including, without limitation, any City under or over passes, deemed necessary by the City, in its judgment, to provide for access of any and all public trails onto the Permit Tract or to otherwise use the Permit Tract.

(3) The CCRRA acknowledges that it reviewed and approved of the Trail Improvement Plans. Any proposed amendment to the Trail Improvement Plans by the City requires the written approval of the CCRRA, which may not be unreasonably withheld. If the CCRRA disapproves of any such proposed amendments, then the CCRRA shall promptly inform the City in writing of such disapproval and the reason(s) thereof, and the City shall redraft any such proposed amendments to address any reasonable concern raised by the CCRRA to the reasonable satisfaction of the CCRRA.

(4) The City shall make the Permit Trail Improvements in accordance with the Trail Improvement Plans, and any amendments approved by CCRRA in writing, and shall complete said Permit Trail Improvements no later than December 31, 2023, unless circumstances beyond the reasonable control of the City delay the completion of said improvements. In no event shall the construction of the Permit Trail Improvements be completed later June 1, 2024 ("Completion Date").

(5) The CCRRA, at its sole discretion, may require the City to secure a lien and completion bond or similar applicable performance or payment bond prior to consenting to any proposed Permit Trail Improvements. All payments made by the City to any contractor, laborer, materials men, or supplier shall be made in a timely manner, unless contested by the City in good faith. The City shall defend, indemnify, and hold harmless the CCRRA, its Commissioners, officers, agents, volunteers and employees from and against any liability, liens, claims, causes of action, judgments, damages, losses, costs, and expenses, including reasonable attorney' s fees, resulting directly or indirectly from, or alleged to have resulted from, or in connection with, any labor, equipment, or materials delivered or claimed to have been delivered to the Permit Tract in connection with the Permit Trail Improvements.

(6) The City must modify the slopes, out-slopes, drainage systems, ditch configurations, utilities and any other improvements made or placed by the City or others within said Permit Tract according to the Trail Improvement Plans, or any amendments to the Trail Improvement Plans approved by the CCRRA in writing. Except as depicted in such Trail Improvement Plans and any amendments approved in writing by the CCRRA, the City may not make any modifications to the slopes, out-slopes, ditch configurations, utilities or other modifications or improvements made or placed by the City or others within said Permit Trac without first obtaining the written approval of the CCRRA. The CCRRA may not unreasonably withhold, condition, or delay said approval.

B. Post Alterations to Permit Trail Improvements. After the City completes the Permit Trail Improvements, the City shall not construct new fences, retaining walls, buildings, or any other improvements or obstructions, perform tillage, plant new trees other than replacements per the Trail Improvement Plans, or hinder in any way the flow of surface water within the Permit Tract without first obtaining the written approval of the CCRRA. The CCRRA may not unreasonably withhold, condition, or delay said approval.

C. No Motorized Traffic. The City may not permit any motorized traffic to be on or use the Trail or be on the Permit Tract, under any circumstances, excepting as may be allowed by the applicable City and the County Ordinances, and for maintenance, emergency, and law enforcement purposes.

D. Nuisance, Waste. The City shall not permit the existence of any nuisance or the occurrence of any waste on the Permit Tract.

E. Maintenance. During the Term of this Permit Agreement and until select maintenance and operation obligations of the City are transferred from the City to the CCRRA in the Future Trail Agreement, the City shall, at its sole cost and expense, and at all times:

(1) Use all reasonable precautions to prevent waste, injury, death, or property damage on the Permit Tract, and modify, repair, or replace any and all Permit Trail Improvements when the City or the CCRRA reasonably determines it to be necessary;

(2) Replace all topsoil and reestablish grass cover with sod or seed on exposed soil areas within the Permit Tract where excavation and embankment construction have taken place, and where clay or other poor soil has been exposed; and

(3) Keep the Permit Trail Improvements and the Permit Tract clean, and in good condition and repair, and promptly remove graffiti, debris, garbage, and other materials from the Permit Tract that are unrelated to the construction of the Permit Trail Improvements; and

(4) Maintain the drainage system located within the limits of the Permit Tract in a state of good condition and repair.

2.8 **Costs**. During the Term of this Permit Agreement and until the Parties enter the Future Trail Agreement, the City shall pay, or cause others to pay all costs related to the inspection, planning, design, construction, maintenance, and operation of the Permit Trail Improvements, and the CCRRA shall have no obligation to pay any taxes, special assessments or other charges or fees, related to:

A. The inspection, planning, design, construction, maintenance, and operation of the Permit Trail Improvements; or

B. The maintenance, operation, repairs, replacements, of any Future Trail Extension of the Permit Trail Improvements or any other maintenance, repairs, or replacement obligations of the City pursuant to this Permit Agreement. For an avoidance of doubt, the City hereby agrees that the CCRRA shall be exempt from any taxes, special assessments or other charges or fees related to the City's construction and ongoing maintenance and operation obligations of the Permit Trail Improvements.

2.9 **Environmental Concerns.**

A. The City shall not create or permit any condition on the Permit Tract that could present a threat to human health or to the environment. The City shall bear the expense of all practices or work, investigative, preventative, or remedial, which may be required because of any conditions of the Permit Tract introduced by the City, sub-permittees, or invitees during the City's period of use, including conditions introduced by the City, sub-permittees, or invitees which affect other lands. The City expressly agrees that the obligations it hereby assumes shall survive cancellation of this Permit Agreement.

B. The CCRRA may enter upon the Permit Tract without any prior notice to the City and without any prior approval of the City provided said entry minimizes interference with the City's authorized use of the Permit Tract.

C. The CCRRA may conduct any such inspections or testing on the Permit Tract at the CCRRA's sole cost and expense, provided said inspections minimize interference with the City's authorized use of the Permit Tract.

D. The City made inspections, tests, audits, or reviews of the physical condition of the Permit Tract including without limitation, soil tests, soil borings, surveys, environmental audits, and other tests of the Permit Tract, ("Environmental Inspections"), reviewed Environmental Reports, and has determined in its sole and independent discretion that the Permit Tract is fit and suitable for the City's intended use and enjoyment.

E. The City shall indemnify, defend, and hold CCRRA harmless from any and all actual out-of-pocket expenses incurred by the CCRRA relating to containing or disposing of any Contamination released by such inspections.

In addition to the foregoing provisions of this Section, and in exchange for the rights and privileges granted in this Permit Agreement, the City hereby agrees to bear the expense of all practices or work, preventative, investigative or remedial necessary to comply with all federal, state, local and other governmental statutes, rules and regulations necessary for the City' s use of the Permit Tract for recreational trail purposes regarding any Contamination, as defined in this Section, on the Permit Tract regardless of whether or not

the same was present on the Permit Tract before or after the commencement of this Permit Agreement.

The City expressly agrees that the obligations it hereby assumes related to construction, maintenance, and operation of the Permit Trail Improvements, including the Underpass, Sidewalks, and the Trail, and excepting any obligations transferred from the City to the CCRRA in the Future Trail Agreement, shall survive the cancellation of this Permit Agreement

2.10 <u>Condition of Permit Tract</u>.

A. The CCRRA represents and warrants to the City that except for any information that CCRRA disclosed to the City prior to the full execution of this Permit Agreement, the CCRRA is unaware of i) any pending or threatened Claim regarding the Permit Tract; and ii) other Contamination on the Permit Tract.

B. Except as otherwise provided in this Permit Agreement, the City understands, acknowledges, and agrees that the City is accepting the Permit Tract in an "AS IS" physical condition, with no express or implied representations or warranties by CCRRA as to the physical condition or fitness or suitability for any particular purpose, express or implied.

C. The City affirmatively represents by entering into this Permit Agreement that the City had a sufficient opportunity to inspect the Permit Tract, and to review the Environmental Reports.

D. The City covenants and agrees to not sue the CCRRA, its Commissioners, officers, agents, and employees or any person acting on their behalf or the UP, and its affiliates, assigns, officers, employees, agents, owners, predecessors, grantors and successors for any claims or costs arising from or relating to any Contamination present or alleged to be present within the Permit Tract at any time prior to the Effective Date of this Permit Agreement, excepting only any claims or costs arising from or relating to a failure of CCRRA to disclose a material fact related to Contamination of which the CCRRA was aware prior to the Effective Date, and provided that said material fact adversely and significantly affected the City's intended use and enjoyment of the Permit Tract under this Permit Agreement.

For purposes of this Permit Agreement, the following definitions apply:

"Claim" means any administrative, regulatory, or judicial action or cause of action, lawsuit, liability, judgment, penalty, damages, directive, or claim.

"Contamination" means the presence at or within any environmental media of any Substance, other than a substance which is entirely containerized or beneficially used.

"Substance" means any substance the exposure or access to, or the manufacture, generation, use, transportation, abandonment, treatment, storage, disposal, or release thereof, that is now or hereafter prohibited. limited or regulated by any law or governmental unit.

2.11 **Compliance with Ordinances, Rules and Regulations, and Laws**.

A. The City shall take all reasonable steps to comply with and enforce all of the ordinances, rules and regulations, and laws of local, municipal, state, and federal governmental agencies, as they apply to the use of the Permit Tract.

B. The City may enforce its ordinances on the Permit Tract, as they apply to third parties.

C. The City shall take all reasonable steps to comply with all of the rules and regulations which the CCRRA has promulgated, and may promulgate after the Effective Date, provided the CCRRA has a reasonable basis for said rules and regulations, and provided said rules and regulations are genuinely and reasonably related to the CCRRA's obligations under the Terms and Conditions.

2.12 **Liens and Encumbrances**. The City shall not permit any liens or encumbrances to be established or remain against the Permit Tract, including but not limited to, encumbrances with respect to work performed or equipment or materials furnished in connection with use of the Permit Tract by the City, its agents, employees, customers, invitees, sub-permittees, or other occupiers of the Permit Tract pursuant to this Permit Agreement.

2.13 **Notices**. Any notice or demand, which may or must be given or made by a Party to the other Party under the terms of this Permit Agreement or any statute or ordinance, shall be in writing and shall be sent by certified mail or delivered in person to the other Party as follows:

Carver County Regional Railroad Authority
Martin Walsh
Parks and Recreation Director
11360 Hwy 212
Cologne, MN 55322

The City of Chaska
Matt Clark
City of Chaska Engineer
One City Hall Plaza
Chaska, MN 55318

2.14 **No Third-Party Beneficiaries**. This Permit Agreement does not, and is not intended to, create Third-Party beneficiary rights.

2.15 **Existing Rights of Others**.

A. The City accepts the Permit Tract subject to the Terms and Conditions, the Utility Agreements, and the rights of any person, firm, or corporation, including the CCRRA, in and to any existing telephone, telegraph, and/or other wires, poles, and facilities of any kind whatsoever, whether of record, or not of record, or whether open and obvious on the ground.

B. If at any time, should it become necessary because of the City's use of the Permit Tract to relocate any said poles, wires, or facilities by reason of this Permit Agreement, then the City shall hold the CCRRA harmless from such costs. The CCRRA shall, upon the City's request, provide reasonable cooperation with any such relocation.

C. The City also accepts the Permit Tract subject to any want or failure at any time of the CCRRA's title to the Permit Tract, or any part thereof, and the City shall assume any damages sustained by the City in connection therewith.

D. The City accepts the Permit Tract subject to the rights of any, including the CCRRA, in and to any roadways, easements, leases, and permits, whether granted at the CCRRA's sole discretion either prior to or after the Effective Date of this Trail Permit.

E. The City accepts the Permit Tract subject to the right of the CCRRA, its officers, employees, agents, permittees, lessees, and contractors to enter and to be upon the Permit Tract, when reasonably necessary, to inspect and repair Permit Tract, and to temporarily place equipment on the Permit Tract for the purpose of inspecting, maintaining, repairing, or constructing upon the Permit Tract.

2.16 **Indemnification**. During the Term of this Permit Agreement:

A. Each Party to this Permit Agreement is responsible for its own acts, omissions, and the results thereof to the extent authorized by law and will not be responsible for the acts and omissions of others and the results thereof.

Minnesota Statutes Chapter 466 and other applicable laws govern the liability of the CCRRA and the City.

B. The City shall defend, indemnify, and hold harmless the CCRRA, its agents, and employees against any claim arising out of or resulting from the City's use of the Permit Tract or damage to the Permit Tract (except as permitted herein), but only to the extent caused in whole or in part by: i) the negligent acts, errors or omissions of the City, its officers, agents, employees, contractor, subcontractors or anyone for whose acts the City may be liable; or ii) the breach of any representation or warranty made by the City in this Permit Agreement. The City shall carry insurance, sufficient to meet the City's maximum liability under Minnesota Statutes. §466.04, as amended. In the alternative to insurance coverage, the City may self-insure if its governing body determines self-insurance is allowed by law and appropriate.

C. The CCRRA shall defend, indemnify, and hold harmless the City, its agents, and employees against any claim arising out of the CCRRA's use of the Permit Tract or damage to the Trail Permit Improvements, but only to the extent caused in whole or in part by: i) the negligent acts, errors or omissions of the CCRRA, its officers, agents, employees, subcontractors or anyone for whose acts the CCRRA may be liable; or ii) the breach of any representation or warranty made by the CCRRA in this Permit Agreement. The CCRRA shall carry insurance sufficient to meet the CCRRA's maximum liability under Minnesota Statutes. §466.04. In the alternative to insurance coverage, the CCRRA may self-insure if its governing body determines self-insurance is allowed by law and appropriate.

D. To the full extent permitted by law, actions by the CCRRA and the City pursuant to this Agreement are intended to be and shall be construed as a "cooperative activity" and it is the intent of the CCRRA and the City that they shall be deemed a "single governmental unit" for the purposes of liability, all as set forth in Minnesota Statutes. §471.59, subd. 1a, provided further that for purposes of such statute, each Party to this Permit Agreement expressly declines responsibility for the acts or omissions of the other Party.

E. The provisions and obligations set forth in this Section 2.16 shall survive the expiration or earlier termination of this Permit Agreement.

D. The CCRRA retains the right to access, enter, and be upon the Permit Tract for the purposes of maintaining or improving any of its adjacent properties. The CCRRA shall be responsible for any repairs or damage to the Permit Tract after the City's construction of the Permit Trail Improvements arising from the CCRRA's access and use of the Permit Trail. The City shall maintain

insurance in the following amounts and types at all times during the Term of this Permit Agreement:

2.17 **City's Contractor's Insurance.** During the period of construction of the Permit Trail Improvements, and to protect itself and the CCRRA under the indemnification provisions contained herein, the City shall cause each of its contractors for the Permit Trail Improvements, ("Contractor"), to purchase and maintain insurance coverage reasonably acceptable to the CCRRA, and which meets the CCRRA's standard insurance requirements as set forth immediately below:

1). Commercial General Liability Insurance Policy with minimum limits of $1,500,000 combined single limit (CSL), with coverage pertaining to premises operations. In the event Combined Single Limits Coverage is not secured, the following minimum limits apply:

$3,000,000 Aggregate
$3,000,000 Products and Completed Operations Aggregate
$1,500,000 Personal Injury and Advertising Injury
$1,500,000 Each Occurrence
$100,000 Fire Damage Limit
$5,000 Medical Expense

The policy must be written on an "occurrence" basis and not a "claims-made" basis.

2). Automobile Liability Insurance including owned, non-owned, and hired vehicles in an amount not less than $1,500,000 combined single limit (CSL) for total bodily injuries and/or damages arising from any one accident. If automobiles are not used, the Carver County Risk Management Department must receive a letter from the Contractor stating the same.

3). Professional Liability Insurance (when required) the following minimum limits apply:

$3,000,000 Aggregate
$1,500,000 per claim

4). Excess Umbrella Liability Policy will be required additionally if any of the above policies have lower limits than stated.

5). Worker's Compensation Insurance.

6). Also include standard contract language for Indemnification and Liability.

Prior to the start of construction on the Permit Trail Improvements, the Contractor shall furnish the CCRRA with an original Certificate of Insurance memorializing the insurance coverage areas and limits approved by the CCRRA, meeting all of the CCRRA insurance requirements set forth above and listing the CCRRA as an "Additional Insured" for all coverage

areas, excepting Worker's Compensation and Professional Liability. The Certificates of Insurance shall provide that the insurance company shall endeavor to give CCCRA thirty (30) days' written notice of cancellation, non-renewal, or any material change in any described policies. It is understood and agreed that the City's liability shall be limited by the provisions of Minnesota Statute § 466 and/or other applicable law.

2.18 **Covenant**. The City, in consideration of the permitting of the Permit Tract, as herein provided, hereby covenants, and agrees to fully to abide by and perform all of the conditions, covenants and agreements contained in this Permit Agreement, and to be observed and performed by the City, and to yield up the Permit Tract with the all of the Permit Trail Improvements constructed pursuant to the authority granted in this Permit Agreement unto the CCRRA on the Termination Date in as good condition as when entered upon, except for normal wear and tear.

2.19 **Quiet Enjoyment**. The CCRRA has the right and authority to enter into this Permit Agreement and if the City performs the terms hereof to be performed by the City, then during the Term of this Permit Agreement, the City shall be entitled to use of the Permit Tract subject to the terms and conditions of this Permit Agreement.

2.20 **Waiver**. No receipt of money by either Party from the other Party after any default by -the other Party or after the Termination Date or after the service of any notice or after the commencement of any lawsuit or after final judgment for possession of the Permit Tract, shall waive such default, or reinstate, continue, or extend the Term of this Permit Agreement, or affect any such notice or lawsuit, as the case may be. No waiver of any default of a Party shall be implied from omission by the other Party to take any action on account of such default, and no express waiver shall affect any default other than the default specified in the express waiver and that only for the time and to the extent therein stated.

2.21 **Term**.

A. The City understands, acknowledges, and agrees that the Permit Tract was acquired by the CCRRA subject to the Terms and Conditions, which requires, in part, the preservation of the Permit Tract and the Property for Transportation Uses, and that CCRRA intends to allow the City to use the Permit Tract only until the Permit Tract must be surrendered by the CCRRA to a third-party for Transportation Uses - or until the Future Trail Use arises and the Parties enter the Future Trail Agreement. The City understands, and acknowledges, and agreed that this Permit Agreement provides the City with a right to use the Permit Tract for a temporary period.

B. The term of this Permit Agreement shall commence on the Effective Date and continue perpetually until terminated in accordance with the section immediately below.

2.22 **Termination for Transportation Uses or Future Trail Use**.

A. The CCRRA may terminate this Permit Agreement by providing 365 days' prior written notice to the City if the CCRRA is required to surrender the Permit Tract to a third-party for Transportation Uses or when CCRRA acquires possession, management and operation of the Trail and Permit Tract for the Future Trail Use, and this Permit Agreement shall terminate effective on the 365th day after such notice is deemed given (the "Termination Date").

B. Notice of the termination of this Permit Agreement shall be given in accordance with the Section 2.13 (Notices).

C. If CCRRA terminates this Permit Agreement for Transportation Uses, the Future Trail Use, or a material breach of this Permit Agreement by the City, then the CCRRA shall not be required to pay any compensation to the City for any of costs the City incurred relating to the planning, design, inspection, construction, maintenance, and operation of any of the Permit Trail Improvements.

2.23 **Rights Upon Termination**. Upon the expiration of one-year or (365) days after notice of termination of this Permit Agreement, ("**Termination Date**"), all rights and obligations hereunder shall terminate and be at an end, excepting such rights and obligations as may have accrued to either of the Parties prior to the Termination Date.

2.24 **City's Obligations Upon Termination**. Upon the Termination Date, and without further notice or demand, the City shall deliver the Permit Tract to the CCRRA.

2.25 **Surrender**. The City shall surrender the Permit Tract unto the CCRRA on the Termination Date in as good condition as when entered upon, excepting normal wear and tear, damage caused by the CCRRA or the County, and the Permit Trail Improvements thereon.

2.26 **Failure to Perform**. If the City fails to perform any of its obligations under this Permit Agreement, or if the City causes any damage to the Permit Tract in connection with performing its obligations as set forth in this Permit Agreement, then the CCRRA may:

A. Seek injunctive relief or damages from the City for such failure; or

B. Within thirty (30) business days after the CCRRA sends written notice to the City for such failure, the CCRRA may, at its option, enter into the Permit Tract and perform such necessary repairs and/or and maintenance to the Permit Tract and Permit Trail Improvements as set forth in this Permit Agreement if the City has not performed them itself. Notwithstanding the immediately preceding sentence, if the failure cannot be cured by the City within thirty (30) days, then the CCRRA shall give the City a reasonable period of time to cure the failure before the CCRRA exercises its self-help remedy. The City shall reimburse the CCRRA for all of the reasonable costs that the CCRRA incurs performing said necessary repairs and/or and

maintenance to the Permit Tract and Permit Trail Improvements, within thirty (30) business days after receipt of the CCRRA's invoice. Notwithstanding anything contained herein to contrary, the CCRRA shall have no obligation to repair, replace or maintain the Permit Trail Improvements or Permit Tract pursuant to the terms of this Permit Agreement.

2.27 **Costs**. The Parties understand, acknowledge, and agree that the CCRRA and the County shall not bear any responsibility for any of the costs of the City's inspections, planning, design, and construction of any of the Permit Trail Improvements, including but not limited to the Underpass, the Sidewalks, and the Trail, nor for any of the costs of the City's maintenance and operation of any of the Permit Trail Improvements, including but not limited to the Underpass, Sidewalks, and the Trail, during the Term of this Permit Agreement, which shall be that period of time commencing from the Effective Date to the Termination Date, ("Term"). Nothing in this Section, however, shall relieve the CCRRA or the County of any liability for damage to the Permit Trail Improvements or the Permit Tract directly or indirectly arising from the negligence or willful misconduct of the CCRRA, the County, or any party for which either is responsible.

2.28 **Breach**

A. If the City shall materially breach or materially make default in any of the conditions, covenants or agreements of this Permit Agreement, which breach or default shall continue for thirty (30) days without cure after the City receives written notice thereof from the CCRRA, then it shall be lawful for the CCRRA, then or at any time thereafter, to declare this Permit Agreement terminated, and to re-enter the Permit Tract and take possession thereof, with or without process of law, and to use any reasonable or necessary lawful force for regaining possession, whereupon the rights and obligations of the Parties shall be the same as above specified in the case of termination pursuant to Sections 2.22 (Termination) and 2.23 (Rights Upon Termination).

B. Any waiver at any time of a breach of any condition, covenant or agreement of this Permit Agreement shall extend only to the particular breach so waived and shall, in no maimer, impair or affect the existence of such condition, covenant or agreements, or the right of the CCRRA thereafter to avail itself of same and any subsequent breach thereof.

C. In the event the CCRRA must act for repossession of the Permit Tract, then the City, its assigns or heirs shall be liable for reasonable attorney's fees incurred by the CCRRA.

2.29 **Assignment**. The benefits and obligations of this Permit Agreement shall extend to and shall bind the heirs, administrators, executors, lessees, successors or assigns of the Parties hereto, but no interest in this Permit Agreement shall be assigned, nor the Permit Tract or any part thereof shall be sub-permitted, used or occupied by any party other than the City unless specifically stated herein.

3. MISCELLANEOUS

3.1 **Effective Date**. This Permit Agreement shall become effective following approval by the Carver County Board of Commissioners and the City Council, and upon its execution by both of the Parties, ("Effective Date").

3.2 **Fees and Costs.** Each of the Parties shall bear its own costs, expenses, fees, and disbursements, including attorney fees, incurred in connection with all matters related to this Permit Agreement, and to the grant of the Trail Permit.

3.3 **Court Retains Jurisdiction**. The Carver County District Court shall have jurisdiction to enforce this Permit Agreement.

3.4 **Entire Agreement**. This Permit Agreement constitutes the entire agreement between the Parties.

3.5 **Binding Effect**. The terms and conditions of this Permit Agreement and Trail Permit shall run with the land and shall be binding on the City and the CCRRA and the successors and assigns of the CCRRA.

3.6 **No Modification**. No modification or any amendment to this Permit Agreement shall be valid or binding unless approved by the County Board, acting for and on behalf of the CCRRA, and approved by the City Council acting on behalf of the City. Any such modification or amendment shall be contained in a written instrument signed by all of the Parties hereto.

3.7 **Governing Law**. This Permit Agreement, and the enforcement and interpretation thereof, shall in all respects be governed by the laws of the State of Minnesota.

3.8. **Recording**. The CCRRA or the City may record this Permit Agreement after full execution by the Parties, with the Carver County Recorder's Office, without any objection from the other Party. The City shall pay any recording costs to record this Permit Agreement and any other documents related to this Permit Agreement if CCRRA cannot record said documents without incurring any cost.

3.9 **Authority**. The persons signing this Permit Agreement, in their representative capacities, represent and warrant that by signing this Permit Agreement they thereby intend to bind their respective principals to the terms and conditions set forth herein; the persons signing in their representative capacity have been authorized to bind their respective principals to such terms; and the respective principals intend to be so bound.

IN WITNESS THEREOF, the Carver County Regional Railroad Authority has hereunto set its hand this _____ day of _____, 2023.

CARVER COUNTY REGIONAL
RAILROAD AUTHORITY

By: _____
John P. Fahey
Its: Chair of Board of Commissioners

By: _____
Dave Hemze
Its: Administrator

ACKNOWLEDGEMENT

STATE OF MINNESOTA)
) ss.
COUNTY OF CARVER)

This instrument was acknowledged before me on the _____ day of_____, 2023 by John P. Fahey, Chair of the Carver County Board of Commissioners, and by Dave Hemze, Administrator of the County of Carver.

_____
Notary Public

My Commission Expires _____

ACCEPTANCE BY CITY:

The City has reviewed this instrument granted herein and accepts it for the purposes and according to the terms stated herein.

CITY OF CHASKA

By: _____
Mark Windschitl
Its: Mayor

By: _____
Matt Podhradsky
Its: Administrator

ACKNOWLEDGEMENT

STATE OF MINNESOTA)
) ss.
COUNTY OF CARVER)

This instrument was acknowledged before me on the _____ day of _____, 2023 by Mark Windschitl, Mayor, and Matt Podhradsky, Administrator, of the City of Chaska.

_____
Notary Public

My Commission Expires_____

This Instrument was Drafted By:

Office of Carver County Attorney
Government Center, Justice Center
604 East Fourth Street
Chaska, MN 55318

EXHIBIT A

(Legal Description of Property in Carver County, Minnesota)

All right, title and interest in and to that part of the Chaska Industrial Lead of the Union Pacific Railroad Company (formerly the Minneapolis & St. Louis Railroad), as presently located and operated, that extends northerly from the southerly line of Carver County, Minnesota to north line of the Southeast Quarter of Section 4, Township 115 North, Range 23 West of the 5th P.M., Carver County, Minnesota, said part being situate in, over and across the following legal subdivisions of Caver County, Minnesota:

Subdivision	Section	Township	Range	Meridian
SW 1/4	17	115N	23W	5TH P.M.
NW 1/4	17	115N	23W	5TH P.M.
SE 1/4	18	115N	23W	5TH P.M.
NE 1/4	18	115N	23W	5TH P.M.
SW1/4	8	115N	23W	5TH P.M.
SE1/4	8	115N	23W	5TH P.M.
NE1/4	8	115N	23W	5TH P.M.
NW1/4	9	115N	23W	5TH P.M.
SW1/4	4	115N	23W	5TH P.M.
SE1/4	4	115N	23W	5TH P.M.

And
Block 11, Townsite of Chaska, according to the recorded plat thereof
Block 12, Townsite of Chaska, according to the recorded plat thereof
Block 13, Townsite of Chaska, according to the recorded plat thereof
Block 23, Townsite of Chaska, according to the recorded plat thereof
Block 24, Townsite of Chaska, according to the recorded plat thereof
Vacated Block 60, Townsite of Chaska, according to the recorded plat thereof
Vacated Block 61, Townsite of Chaska, according to the recorded plat thereof
Vacated Block 62, Townsite of Chaska, according to the recorded plat thereof

And
Block 4, Village of Carver, according to the recorded plat thereof
Block 16, Village of Carver, according to the recorded plat thereof
Block 27, Village of Carver, according to the recorded plat thereof
Block 28, Village of Carver, according to the recorded plat thereof
Block 35, Village of Carver, according to the recorded plat thereof
Block 50, Village of Carver, according to the recorded plat thereof
Block 51, Village of Carver, according to the recorded plat thereof
Block 140, Village of Carver, according to the recorded plat thereof
Block 141, Village of Carver, according to the recorded plat thereof
Block 142, Village of Carver, according to the recorded plat thereof

Torrens Property
Lots 1 and 11, Block 141, VILLAGE OF CARVER, excepting that part of said Lots 1 and 11 lying east of a line drawn parallel with and distant westerly 50 feet from the centerline of the main track of the Minneapolis & St. Louis Railway Company as now located, according to the recorded plat thereof.

Excepting therefrom any Street and roadway rights of way of record.

EXHIBIT B

EXHIBIT "B"

U.P.R.R. REAL ESTATE DEPARTMENT

FOLDER NO. 24389

PROJECT	AUDIT	FOLDER	LEG STAT	PARTY NAME	PURPOSE	COUNTY	CITY	ST	SUBDV	ANNUAL AMT	DISPOSITION	CONTAINED
156919	180042	60093	Active	CITY OF CHASKA	Encroachment - Wireline	Carver	CHASKA	MN	Chaska Industrial Ld	$4,000	Assigned	Totally
165843	185473	52284	Active	CHASKA CITY OF	Crossing - Wireline	CARVER	CHASKA	MN	Chaska Industrial Ld	$0	Assigned	Totally
168947	NWF7605		Active	INITED TELEPHONE CO	Crossing - Wireline	Carver	CHASKA	MN	Chaska Industrial Ld	$0	Assigned	Totally
170049	187122	25091	Active	SPRINT/UNITED MIDWEST	Crossing - Wireline	CARVER	CHASKA	MN	Chaska Industrial Ld	$0	Assigned	Totally
170386	NWF6967		Active	UNITED TELEPHONE COMPANY	Crossing - Wireline	Carver	CHASKA	MN	Chaska Industrial Ld	$0	Assigned	Totally
170532	NWF6119		Active	CHASKA, MINNESOTA	Crossing - Wireline	Carver	CHASKA	MN	Chaska Industrial Ld	$0	Assigned	Totally
170533	NWF6120		Active	CHASKA, MN	Crossing - Wireline	Carver	CHASKA	MN	Chaska Industrial Ld	$0	Assigned	Totally
170534	NWF6122		Active	CHASKA, MN	Crossing - Wireline	Carver	CHASKA	MN	Chaska Industrial Ld	$0	Assigned	Totally
170734	187421	24481	Active	SPRINT/UNITED-MIDWEST	Crossing - Wireline	CARVER	CHASKA	MN	Chaska Industrial Ld	$0	Assigned	Totally
170837	NWF6186		Active	CHASKA, MN	Crossing - Wireline	Carver	CHASKA	MN	Chaska Industrial Ld	$0	Assigned	Totally
170838	NWF6188		Active	CHASKA, MN	Crossing - Wireline	Carver	CHASKA	MN	Chaska Industrial Ld	$0	Assigned	Totally
170839	NWF6189		Active	CHASKA, MN	Crossing - Wireline	Carver	CHASKA	MN	Chaska Industrial Ld	$0	Assigned	Totally
171432	NWF5976		Active	UNITED TELEPHONE COMPANY	Crossing - Wireline	Carver	CHASKA	MN	Chaska Industrial Ld	$0	Assigned	Totally
172000	NWF5433		Active	CHASKA, MN	Crossing - Wireline	Carver	CHASKA	MN	Chaska Industrial Ld	$0	Assigned	Totally
172768	NWF4036		Active	CHASKA, MN	Crossing - Wireline	Carver	CHASKA	MN	Chaska Industrial Ld	$0	Assigned	Totally
173280	NWF2962		Active	CHASKA, MN	Crossing - Wireline	Carver	CHASKA	MN	Chaska Industrial Ld	$0	Assigned	Totally
175451	189070	67584	Active	QWEST CORPORATION	Crossing - Wire Line Master		SYSTEM	NE	Chaska Industrial Ld	$0	Assigned	Totally
176308	NWE7740		Active	CARVER, CITY OF	Crossing Pipeline	Carver	CARVER	MN	Chaska Industrial Ld	$0	Assigned	Totally
178170	NWE5071		Active	CHASKA, CITY OF	Crossing Pipeline	Carver	CHASKA	MN	Chaska Industrial Ld	$0	Assigned	Totally
180929	NWE1789		Active	CHASKA, CITY OF	Crossing Pipeline	Carver	CHASKA	MN	Chaska Industrial Ld	$0	Assigned	Totally
196843	204722	167596	Active	KMC TELECOM, INC.	Crossing - Wireline	Carver	CHASKA	MN	Chaska Industrial Ld	$0	Assigned	Totally
196844	204699	167597	Active	KMC TELECOM, INC.	Crossing - Wireline	Carver	CHASKA	MN	Chaska Industrial Ld	$0	Assigned	Totally
197893	204745	169107	Active	SPRINT MINNESOTA INC	Crossing - Wireline	Carver	CHASKA	MN	Chaska Industrial Ld	$0	Assigned	Totally
198121	205172	169362	Active	KMC TELECOM II INC	Crossing - Wireline	Carver	CHASKA	MN	Chaska Industrial Ld	$0	Assigned	Totally
198602	205359	169949	Active	K M C TELECOM II	Crossing - Wireline	Carver	CHASKA	MN	Chaska Ind. Lead	$0	Assigned	Totally
501749	207006	172045	Active	CITY OF CARVER	Encroachment - Drainage Agreement	Carver	CARVER	MN	Chaska Industrial	$0	Assigned	Totally
507662	NW12470		Active	STATE OF MINNESOTA	Warning Devices - Public Roadway	Carver	CHASKA	MN	Chaska Industrial Ld	$0	Assigned	Totally
507701	NW12496		Active	STATE OF MINNESOTA	Gate Agreement	Carver	CHASKA	MN	Chaska Industrial Ld	$0	Assigned	Totally
510049	NW11392		Active	STATE OF MINNESOTA	Warning Devices - Public Roadway	Carver	CHASKA	MN	Chaska Industrial Ld	$0	Assigned	Totally
510710	NW11025		Active	STATE OF MINNESOTA	Warning Devices - Public Roadway	Carver	CHASKA	MN	Chaska Industrial Ld	$0	Assigned	Totally
516514	NW13337		Active	UNITED STATES OF AMERICA-CORPS OF ENGINEERS	Track Relocation Agreement(Govt Project)	Carver	CHASKA	MN	Chaska Industrial Ld	$0	Assigned	Totally
578037	NWY1890		Active	NORTHWESTERN BELL TELEPHONE CO.	Crossing - Wireline	Carver	CHASKA	MN	Chaska Industrial Ld	$0	Assigned	Totally
578039	NWY1892		Active	NORTHWESTERN BELL TELEPHONE CO.	Crossing - Wireline	Carver	CHASKA	MN	Chaska Industrial Ld	$0	Assigned	Totally
580502	NWY2645		Active	NORTHERN STATES POWER CO.	Crossing - Wireline	Carver	CHASKA	MN	Chaska Industrial Ld	$0	Assigned	Totally
603430	219739	191978	Active	TIME WARNER CABLE	Crossing - Wireline	Carver	CHASKA	MN	Chaska Industrial Ld	$0	Assigned	Totally
606874	RY1018		Active	CHASKA, CITY OF	Warning Devices - Public Roadway	Carver	CHASKA	MN	Chaska Industrial Ld	$0	Assigned	Totally
628423	NWY3750		Active	CHASKA, CITY OF	Crossing Pipeline	Carver	CHASKA	MN	Chaska Industrial Ld	$0	Assigned	Totally
628459	NWY3764		Active	NORTHERN STATES POWER CO.	Crossing - Wireline	Carver	CHASKA	MN	Chaska Industrial Ld	$0	Assigned	Totally
629163	NWY3843		Active	CARVER COUNTY TELEPHONE CO.	Crossing - Wireline	Carver	CHASKA	MN	Chaska Industrial Ld	$0	Assigned	Totally

EXHIBIT B CONTINUED

(List of Known Existing Permits on Property)

EXHIBIT "B"												
630250	NWY3932		Active	CHASKA, CITY OF	Crossing Pipeline	Carver	CHASKA	MN	Chaska Industrial Ld	$0	Assigned	Totally
630311	NWY3943		Active	NORTHERN STATES POWER CO.	Crossing - Wireline	Carver	CARVER	MN	Chaska Industrial Ld	$0	Assigned	Totally
632797	NWY4188		Active	NORTHERN STATES POWER CO.	Crossing - Wireline	Carver	CARVER	MN	Chaska Industrial Ld	$0	Assigned	Totally
638861	NWY4931		Active	UNITED AMERICAN OIL CO.	Crossing Pipeline	Carver	CHASKA	MN	Chaska Industrial Ld	$0	Assigned	Totally
639016	NWY4819		Active	CARVER COUNTY TELEPHONE CO.	Crossing - Wireline	Carver	CHASKA	MN	Chaska Industrial Ld	$0	Assigned	Totally
668995	233772	224184	Active	CITY OF CARVER	Crossing Pipeline	Carver	CARVER	MN	Chaska Industrial Ld	$0	Assigned	Totally
671163	233644	226300	Active	METROPOLITAN COUNCIL ENVIRONMENTAL SERVICES	Crossing Pipeline	Carver	CHASKA	MN	Chaska Industrial Ld	$0	Assigned	Totally
676774	NWY5089		Active	NORTHWESTERN BELL TELEPHONE COMPANY	Crossing - Wireline	Carver	CHASKA	MN	Chaska Industrial Ld	$0	Assigned	Totally
676796	NWY5108		Active	CITY OF CHASKA	Crossing Pipeline	Carver	CHASKA	MN	Chaska Industrial Ld	$0	Assigned	Totally
678798	NWY4887		Active	MINNEAPOLIS GENERAL ELECTRIC	Crossing - Wireline	Carver	CARVER	MN	Chaska Industrial Ld	$0	Assigned	Totally
679186	NWY5020		Active	DOROTHY MARSHALL	Crossing Pipeline	Carver	CHASKA	MN	Chaska Industrial Ld	$0	Assigned	Totally
679196	NWY5030		Active	CITY OF CHASKA	Crossing - Wireline	Carver	CHASKA	MN	Chaska Industrial Ld	$0	Assigned	Totally
679234	NWY5191		Active	CITY OF CHASKA	Crossing - Wireline	Carver	CHASKA	MN	Chaska Industrial Ld	$0	Assigned	Totally
679305	NWY5262		Active	CITY OF CHASKA	Easement - Drainage	Carver	CHASKA	MN	Chaska Industrial Ld	$0	Assigned	Totally
680387	237150	233462	Active	CITY OF CHASKA	Crossing - Public Roadway	Carver	CHASKA	MN	Chaska Industrial Ld	$0	Assigned	Totally

EXHIBIT C

(Legal Description of Permit Tract)

Segment 1:

That part of the former Union Pacific Railroad Company railroad corridor in Block 11, ORIGINAL PLAT OF CHASKA, also known as the MAP OF CHASKA TOWNSITE, according to the recorded plat thereof, Carver County, Minnesota, being 25.00 feet on each side of the centerline of said corridor.

The northwesterly line of said corridor is more particularly described as the monumented southeasterly line, and its southwesterly extension, of Block 2, ADYME ADDITION, according to the recorded plat thereof, said county, all within said Block 11

Segment 2:

That part of the former Union Pacific Railroad Company railroad corridor in Block 12, ORIGINAL PLAT OF CHASKA, also known as the MAP OF CHASKA TOWNSITE, according to the recorded plat thereof, Carver County, Minnesota, being 25.00 feet on each side of the centerline of said corridor.

EXCEPT that part lying northwesterly of a line 15.00 feet northwesterly of said centerline.

The southeasterly line of said corridor is more particularly described as the monumented northwesterly line of CHASKA CROSSINGS, according to the recorded plat thereof, said county, all within said Block 12

Segment 3:

That part of the former Union Pacific Railroad Company railroad corridor in the Northwest Quarter of the Northwest Quarter of Section 9, and in the Southwest Quarter of the Southwest Quarter of Section 4, all in Township 115, Range 23, Carver County, Minnesota, being 50.00 feet on each side of the centerline of said corridor.

Lying southwesterly of a line beginning at the angle point within the North line of TRACT B, REGISTERED LAND SURVEY NO. 86, according to the recorded survey thereof, being on the southeasterly line of said railroad right of way; thence northwesterly, at right angles, to the northwesterly line of said railroad right of way, and said line there terminating, and lying westerly of the East right of way line of State Highway No 41.

EXCEPT that part of the Northwest Quarter of the Northwest Quarter of Section 9, Township 115 North, Range 23 West of the Fifth Principal Meridian, bounded as follows: On the Northeast by the Northerly extension of the East line of Oak Street; on the Southwest by the Easterly line of Walnut Street; on the Southeast by a line parallel with and distant 50 feet

Southeasterly, measured at right angles, from the center line of the main track of the Minneapolis & St. Louis Railway Company (now the Chicago and North Western Transportation Company), as said main track center line was originally located and established over and across said Section 9; on the Northwest by a line parallel with and distant 25 feet Southeasterly, measured at right angles, from the center line of the main track of the Chicago and North Western Transportation Company, as said main track is now located.

ALSO EXCEPT that part of 6th Street East within said corridor.

The southeasterly line of said corridor is more particularly described as the monumented northwesterly line of said REGISTERED LAND SURVEY NO. 86 and its southwesterly extension

[REST OF PAGE LEFT INTENTIONALLY BLANK]

EXHBIIT D

(Depiction of Trail on Permit Tract)

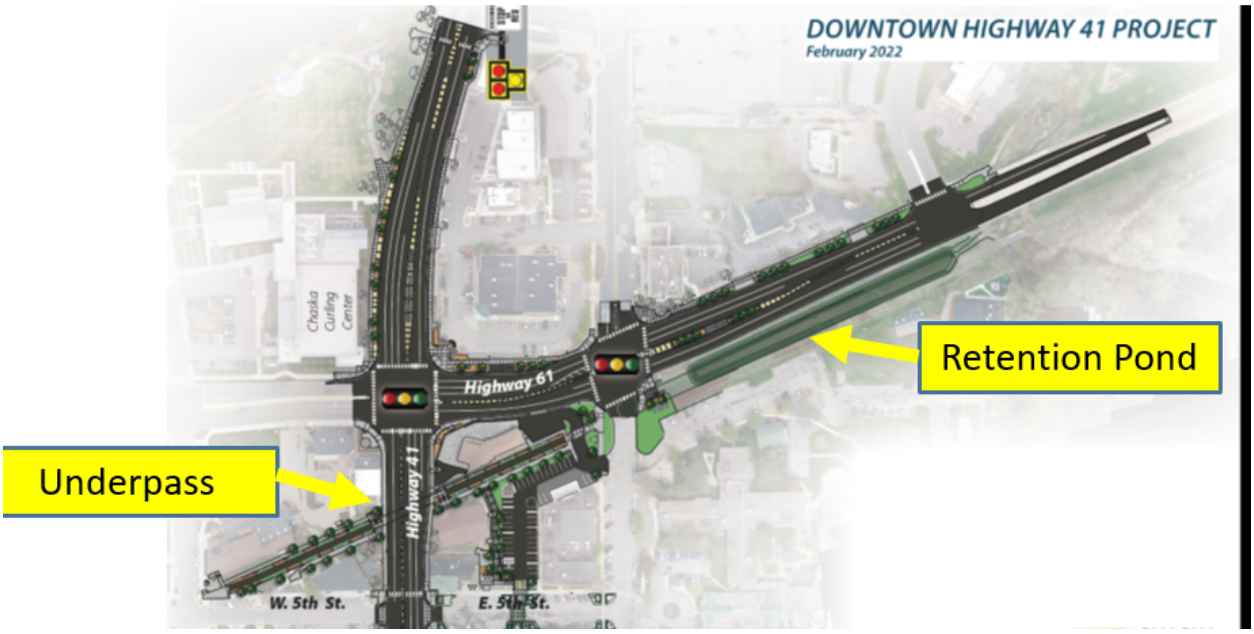

REQUEST FOR ACTION
CHASKA CITY COUNCIL
2/27/2023

Subject: **Resolution of support for state bonding for County Highway 18 (West 82nd Street)**

Prepared By: Alex Mollenkamp, Assistant City Engineer

Background

On February 22, 2021, the City Council approved Resolution 2021-08 approving the master plan for the Arboretum Area Transportation Plan (AATP). As part of that plan, the reconstruction of County Highway 18 (West 82nd Street) has been identified as a future County project.

On April 5, 2021, the City Council passed a resolution of support for state bond funds that would be utilized to cover the local share of the improvements for 82nd Street. The initial bonding request did not receive funding, therefore, Carver County is seeking funding from the legislature again this year. The county requested that each of the affected cities update their supporting resolution.

CITY COUNCIL ACTION REQUESTED

Motion to approve Resolution No. 2023-18, supporting the state issuance of bond dollars for Highway 18 (West 82nd Street) which would fund the local share of the project.

CITY OF CHASKA
CARVER COUNTY, MINNESOTA

RESOLUTION

DATE_____2/27/23_____RESOLUTION NO.___2023-18_____

MOTION BY COUNCILMEMBER_____SECOND BY COUNCILMEMBER_____

Resolution of support for state bonding for County Highway 18 (West 82nd Street)

WHEREAS, the City of Chaska, Carver County, and MnDOT are responsible for the planning and development of a safe and functional multimodal transportation system within their jurisdictional boundaries; and

WHEREAS, the City of Chaska partnered with Carver County, MnDOT, the Minnesota Landscape Arboretum, and the cities of Chanhassen and Victoria to identify transportation system improvements in the Arboretum Area on Highway 5, Highway 41, Rolling Acres Road, Bavaria Road, and West 82nd Street to serve safe and efficient multi modal travel; and

WHEREAS, the Arboretum Area Transportation Plan recommends improving County Highway 18 (West 82nd Street) between Bavaria Road and Highway 41 to a paved, two-lane undivided roadway with trails, featuring a lower speed and sensitive environmental design to fit the unique context; and

WHEREAS, completing this two-mile gap in the transportation network will provide improved safety, mobility, community connectivity, and quality of life, all while accommodating planned growth; and

WHEREAS, Carver County has committed $13 million in local option sales tax and county state aid funds for the project, leaving a funding gap of $10 million that the City of Chaska and other project partners have no current capacity to fund locally; and

NOW, THEREFORE, BE IT RESOLVED that the City Council of Chaska does hereby support Carver County's state bonding request for $10 million to be used for improvements to County Highway 18 that will benefit the safe and efficient travel for all users through the Arboretum Area.

Passed and adopted by the City Council of the City of Chaska, Minnesota, this 27th day of February 2023.

_____
Mike Huang, Pro Tem Mayor

Attest:_____
Chaska Deputy Clerk

REQUEST FOR ACTION
CHASKA CITY COUNCIL
2/27/2023

Subject: **Premises Gambling Permit Application for the Chaska Lions Club**

Prepared by: Denise Beebe, Senior Clerk

The Chaska Lions Club are making application with the State of Minnesota Gambling Division for a premises permit which allows them to conduct lawful/charitable gambling at the Patron's Mexican Restaurant located at 207 N. Chestnut St.

As part of the application process, the City must approve each application by resolution.

Staff recommends approval of this premises permit.

CITY COUNCIL ACTION REQUESTED

Motion to Adopt Resolution 2023-19 approving the premises permit application for the Chaska Lions Club, to conduct lawful/charitable gambling at Patron's Mexican Restaurant.

CITY OF CHASKA

CARVER COUNTY, MINNESOTA

RESOLUTION

DATE 2/27/2023 RESOLUTION NO. 2023-19

MOTION BY COUNCILMEMBER_____ SECOND BY COUNCILMEMBER_____

Resolution Approving Premises Gambling Permit Application for
Chaska Lions Club at Patron's Mexican Restaurant

WHEREAS, the Chaska Lions Club is a qualified organization pursuant to Chaska Ordinance No. 381, Section 5; with at least 50 percent (50%) or more of its active members residing within the City or which meets at least once a month and at least ninety percent (90%) of such regular scheduled meetings are conducted with in the City of Chaska; and,

WHEREAS, the Chaska Lions Club has made proper application to the Minnesota Department of Gambling for a lawful Charitable Gambling permit; and,

WHEREAS, Patron's, holds an On-Sale Intoxicating License with the City of Chaska;

NOW, THEREFORE, BE IT RESOLVED by the City Council of the City of Chaska, Minnesota, that the Premises Permit application for Chaska Lions Club at Patron's Mexican Restaurant, 207 N. Chestnut St, Chaska, MN is hereby approved.

Passed and adopted by the City Council of the City of Chaska, Minnesota, this 27th day of February, 2023.

_____
Mike Huang, Mayor Pro Tem

Attest: _____
Deputy Clerk

MINNESOTA LAWFUL GAMBLING

LG214 Premises Permit Application

Annual Fee $150 (NON-REFUNDABLE)

REQUIRED ATTACHMENTS TO LG214

1. If the premises is leased, attach a copy of your lease. Use **LG215 Lease for Lawful Gambling Activity.**
2. $150 annual premises permit fee, for each permit (non-refundable). Make check payable to "**State of Minnesota**."

Mail the application and required attachments to:
Minnesota Gambling Control Board
1711 West County Road B, Suite 300 South
Roseville, MN 55113

Questions? Call 651-539-1900 and ask for Licensing.

ORGANIZATION INFORMATION

Organization Name: Chaska Lions Club License Number: 01070

Chief Executive Officer (CEO) Bryce Ehrman Daytime Phone: 612-817-5816

Gambling Manager: Bethany Poneth Daytime Phone: 952-923-6016

GAMBLING PREMISES INFORMATION

Current name of site where gambling will be conducted: Patrons

List any previous names for this location:

Street address where premises is located: 207 N Chestnut St.
(Do not use a P.O. box number or mailing address.)

City: Chaska **OR** Township: County: Carver Zip Code: 55318

Does your organization own the building where the gambling will be conducted?

☐ **Yes** ☒ **No** **If no,** attach LG215 Lease for Lawful Gambling Activity.

A lease is not required if only a raffle will be conducted.

Is any other organization conducting gambling at this site? ☐ Yes ☒ No ☐ Don't know

Note: Bar bingo can only be conducted at a site where another form of lawful gambling is being conducted by the applying organization or another permitted organization. Electronic games can only be conducted at a site where paper pull-tabs are played.

Has your organization previously conducted gambling at this site? ☐ Yes ☒ No ☐ Don't know

GAMBLING BANK ACCOUNT INFORMATION; MUST BE IN MINNESOTA

Bank Name: Old National Bank Bank Account Number: 112132978

Bank Street Address: 301 N. Chestnut St. City: Chaska State: **MN** Zip Code: 55318

ALL TEMPORARY AND PERMANENT OFF-SITE STORAGE SPACES

Address (Do not use a P.O. box number):	City:	State:	Zip Code:
		MN	
		MN	
		MN	

LG214 Premises Permit Application

ACKNOWLEDGMENT BY LOCAL UNIT OF GOVERNMENT: APPROVAL BY RESOLUTION

CITY APPROVAL for a gambling premises located within city limits

City Name: _____

Date Approved by City Council: _____

Resolution Number: _____
(If none, attach meeting minutes.)

Signature of City Personnel:

_____

Title: _____ Date Signed: _____

Local unit of government must sign.

COUNTY APPROVAL for a gambling premises located in a township

County Name: _____

Date Approved by County Board: _____

Resolution Number: _____
(If none, attach meeting minutes.)

Signature of County Personnel:

_____

Title: _____ Date Signed: _____

TOWNSHIP NAME: _____

Complete below only if required by the county.
On behalf of the township, I acknowledge that the organization is applying to conduct gambling activity within the township limits. (A township has no statutory authority to approve or deny an application, per Minnesota Statutes 349.213, Subd. 2.)

Print Township Name: _____

Signature of Township Officer: _____

Title: _____ Date Signed: _____

ACKNOWLEDGMENT AND OATH

1. I hereby consent that local law enforcement officers, the Board or its agents, and the commissioners of revenue or public safety and their agents may enter and inspect the premises.
2. The Board and its agents, and the commissioners of revenue and public safety and their agents, are authorized to inspect the bank records of the gambling account whenever necessary to fulfill requirements of current gambling rules and law.
3. I have read this application and all information submitted to the Board is true, accurate, and complete.
4. All required information has been fully disclosed.
5. I am the chief executive officer of the organization.
6. I assume full responsibility for the fair and lawful operation of all activities to be conducted.
7. I will familiarize myself with the laws of Minnesota governing lawful gambling and rules of the Board and agree, if licensed, to abide by those laws and rules, including amendments to them.
8. Any changes in application information will be submitted to the Board no later than ten days after the change has taken effect.
9. I understand that failure to provide required information or providing false or misleading information may result in the denial or revocation of the license.
10. I understand the fee is non-refundable regardless of license approval/denial.

_____ _____
Signature of Chief Executive Officer (designee may not sign) Date

Data privacy notice: The information requested on this form (and any attachments) will be used by the Gambling Control Board (Board) to determine your organization's qualifications to be involved in lawful gambling activities in Minnesota. Your organization has the right to refuse to supply the information; however, if your organization refuses to supply this information, the Board may not be able to determine your organization's qualifications and, as a consequence, may refuse to issue a permit. If your organization supplies the information requested, the Board will be able to process your organization's application. Your organization's name and address will be public information when received by the Board. All other information provided will be private data about your organization until the Board issues the permit. When the Board issues the permit, all information provided will become public. If the Board does not issue a permit, all information provided remains private, with the exception of your organization's name and address which will remain public. Private data about your organization are available to: Board members, Board staff whose work requires access to the information; Minnesota's Department of Public Safety, Attorney General, Commissioners of Administration, Minnesota Management & Budget, and Revenue; Legislative Auditor, national and international gambling regulatory agencies; anyone pursuant to court order; other individuals and agencies specifically authorized by state or federal law to have access to the information; individuals and agencies for which law or legal order authorizes a new use or sharing of information after this notice was given; and anyone with your written consent.

This form will be made available in alternative format, i.e. large print, braille, upon request.

An equal opportunity employer

REQUEST FOR ACTION
CHASKA CITY COUNCIL
02/27/2023

Subject: **Resolution Authorizing State of Minnesota Joint Powers Agreement with the City of Chaska on Behalf of it's City Attorney and Police Department**

Prepared By: **Ryan Seibert, Chief of Police**

Background

A joint powers agreement between the State of Minnesota and the City of Chaska Police Department allows for our agency to share, access, and exchange criminal justice data as established in Minnesota State Statute. All joint power agreements entered under this requirement expire after five years and the last agreement was executed on 2/26/2018, thereby necessitating a renewed agreement.

Without a joint powers agreement between the State of Minnesota and the City of Chaska, the Department of Public Safety and Minnesota Bureau of Criminal Apprehension would not recognize the Chaska Police Department as an authorized user of criminal justice information available through their system. The ability to access, share, and exchange this information is a critical part of department operations.

Minnesota State Statute specifies that a city council must approve via resolution that the mayor and city clerk are authorized to sign the joint powers agreement and court amendment document for a new agreement to be authorized on behalf of the city.

Attachment

- State of Minnesota Joint Powers Agreement
- Court Data Services Subscriber Amendment to CJDN Subscriber Agreement

Recommended Action

Motion to adopt resolution 2023-22 approving the State of Minnesota Joint Powers Agreement with the City of Chaska on Behalf of its City Attorney and Police Department.

CITY OF CHASKA
CARVER COUNTY, MINNESOTA

RESOLUTION

DATE_____2/27/23_____RESOLUTION NO.___2023-22_____

MOTION BY COUNCILMEMBER_____SECOND BY COUNCILMEMBER_____

Resolution Approving State of Minnesota Joint Powers Agreements with the City of Chaska on Behalf of its City Attorney and Police Department

---

WHEREAS, the City of Chaska on behalf of its Prosecuting Attorney and Police Department desires to enter into Joint Powers Agreements with the State of Minnesota, Department of Public Safety, Bureau of Criminal Apprehension to use systems and tools available over the State's criminal justice data communications network for which the City is eligible. The Joint Powers Agreements further provide the City with the ability to add, modify and delete connectivity, systems and tools over the five year life of the agreement and obligates the City to pay the costs for the network connection.

NOW, THEREFORE, BE IT RESOLVED by the City Council of Chaska, Minnesota as follows:

1. That the State of Minnesota Joint Powers Agreements by and between the State of Minnesota acting through its Department of Public Safety, Bureau of Criminal Apprehension and the City of Chaska on behalf of its Prosecuting Attorney and Police Department, are hereby approved.

2. That the Chief of Police, Ryan Seibert, or his or her successor, is designated the Authorized Representative for the Police Department. The Authorized Representative is also authorized to sign any subsequent amendment or agreement that may be required by the State of Minnesota to maintain the City's connection to the systems and tools offered by the State.

3. That the County Attorney, Mark Metz, or his or her successor, is designated the Authorized Representative for the Prosecuting Attorney. The Authorized Representative is also authorized to sign any subsequent amendment or agreement that may be required by the State of Minnesota to maintain the City's connection to the systems and tools offered by the State.

4. That Mark Windschitl, the Mayor for the City of Chaska, and Matt Podhardsky, the City Clerk, are authorized to sign the State of Minnesota Joint Powers Agreements.

Passed and adopted by the City Council of the City of Chaska, Minnesota, this 27th day of February 2023.

_____
Mike Huang, Pro Tem Mayor

Attest:_____
By: Matt Podhradsky
City Clerk

COURT DATA SERVICES SUBSCRIBER AMENDMENT TO CJDN SUBSCRIBER AGREEMENT

This Court Data Services Subscriber Amendment ("Subscriber Amendment") is entered into by the State of Minnesota, acting through its Department of Public Safety, Bureau of Criminal Apprehension, ("BCA") and the City of Chaska on behalf of its Police Department ("Agency"), and by and for the benefit of the State of Minnesota acting through its State Court Administrator's Office ("Court") who shall be entitled to enforce any provisions hereof through any legal action against any party.

Recitals

This Subscriber Amendment modifies and supplements the Agreement between the BCA and Agency, SWIFT Contract number 222923, of even or prior date, for Agency use of BCA systems and tools (referred to herein as "the CJDN Subscriber Agreement"). Certain BCA systems and tools that include access to and/or submission of Court Records may only be utilized by the Agency if the Agency completes this Subscriber Amendment. The Agency desires to use one or more BCA systems and tools to access and/or submit Court Records to assist the Agency in the efficient performance of its duties as required or authorized by law or court rule. Court desires to permit such access and/or submission. This Subscriber Amendment is intended to add Court as a party to the CJDN Subscriber Agreement and to create obligations by the Agency to the Court that can be enforced by the Court. It is also understood that, pursuant to the Master Joint Powers Agreement for Delivery of Court Data Services to CJDN Subscribers ("Master Authorization Agreement") between the Court and the BCA, the BCA is authorized to sign this Subscriber Amendment on behalf of Court. Upon execution the Subscriber Amendment will be incorporated into the CJDN Subscriber Agreement by reference. The BCA, the Agency and the Court desire to amend the CJDN Subscriber Agreement as stated below.

The CJDN Subscriber Agreement is amended by the addition of the following provisions:

1. **TERM; TERMINATION; ONGOING OBLIGATIONS.** This Subscriber Amendment shall be effective on the date finally executed by all parties and shall remain in effect until expiration or termination of the CJDN Subscriber Agreement unless terminated earlier as provided in this Subscriber Amendment. Any party may terminate this Subscriber Amendment with or without cause by giving written notice to all other parties. The effective date of the termination shall be thirty days after the other party's receipt of the notice of termination, unless a later date is specified in the notice. The provisions of sections 5 through 9, 12.b., 12.c., and 15 through 24 shall survive any termination of this Subscriber Amendment as shall any other provisions which by their nature are intended or expected to survive such termination. Upon termination, the Subscriber shall perform the responsibilities set forth in paragraph 7(f) hereof.

2. **Definitions**. Unless otherwise specifically defined, each term used herein shall have the meaning assigned to such term in the CJDN Subscriber Agreement.

a. **"Authorized Court Data Services"** means Court Data Services that have been authorized for delivery to CJDN Subscribers via BCA systems and tools pursuant to an Authorization Amendment to the Joint Powers Agreement for Delivery of Court Data Services to CJDN Subscribers ("Master Authorization Agreement") between the Court and the BCA.

b. **"Court Data Services"** means one or more of the services set forth on the Justice Agency Resource webpage of the Minnesota Judicial Branch website (for which the current address is www.courts.state.mn.us) or other location designated by the Court, as the same may be amended from time to time by the Court.

c. "**Court Records**" means all information in any form made available by the Court to Subscriber through the BCA for the purposes of carrying out this Subscriber Amendment, including:

i. "**Court Case Information**" means any information in the Court Records that conveys information about a particular case or controversy, including without limitation Court Confidential Case Information, as defined herein.

ii. "**Court Confidential Case Information**" means any information in the Court Records that is inaccessible to the public pursuant to the Rules of Public Access and that conveys information about a particular case or controversy.

iii. "**Court Confidential Security and Activation Information"** means any information in the Court Records that is inaccessible to the public pursuant to the Rules of Public Access and that explains how to use or gain access to Court Data Services, including but not limited to login account names, passwords, TCP/IP addresses, Court Data Services user manuals, Court Data Services Programs, Court Data Services Databases, and other technical information.

iv. "**Court Confidential Information**" means any information in the Court Records that is inaccessible to the public pursuant to the Rules of Public Access, including without limitation both i) Court Confidential Case Information; and ii) Court Confidential Security and Activation Information.

d. "**DCA**" shall mean the district courts of the state of Minnesota and their respective staff.

e. "**Policies & Notices**" means the policies and notices published by the Court in connection with each of its Court Data Services, on a website or other location designated by the Court, as the same may be amended from time to time by the Court. Policies & Notices for each Authorized Court Data Service identified in an approved request form under section 3, below, are hereby made part of this Subscriber Amendment by this reference and provide additional terms and conditions that govern Subscriber's use of Court Records accessed through such services, including but not limited to provisions on access and use limitations.

f. "**Rules of Public Access**" means the Rules of Public Access to Records of the Judicial Branch promulgated by the Minnesota Supreme Court, as the same may be amended from time to time, including without limitation lists or tables published from time to time by the Court entitled *Limits on Public Access to Case Records or Limits on Public Access to Administrative Records*, all of which by this reference are made a part of this Subscriber Amendment. It is the obligation of Subscriber to check from time to time for updated rules, lists, and tables and be familiar with the contents thereof. It is contemplated that such rules, lists, and tables will be posted on the Minnesota Judicial Branch website, for which the current address is www.courts.state.mn.us.

g. "**Court**" shall mean the State of Minnesota, State Court Administrator's Office.

h. **"Subscriber"** shall mean the Agency.

i. "**Subscriber Records**" means any information in any form made available by the Subscriber to the Court for the purposes of carrying out this Subscriber Amendment.

3. REQUESTS FOR AUTHORIZED COURT DATA SERVICES. Following execution of this Subscriber Amendment by all parties, Subscriber may submit to the BCA one or more separate requests for Authorized Court Data Services. The BCA is authorized in the Master Authorization Agreement to process, credential and approve such requests on behalf of Court and all such requests approved by the BCA are adopted and incorporated herein by this reference the same as if set forth verbatim herein.

a. **Activation**. Activation of the requested Authorized Court Data Service(s) shall occur promptly following approval.

b. **Rejection**. Requests may be rejected for any reason, at the discretion of the BCA and/or the Court.

c. **Requests for Termination of One or More Authorized Court Data Services**. The Subscriber may request the termination of an Authorized Court Data Services previously requested by submitting a notice to Court with a copy to the BCA. Promptly upon receipt of a request for termination of an Authorized Court Data Service, the BCA will deactivate the service requested. The termination of one or more Authorized Court Data Services does not terminate this Subscriber Amendment. Provisions for termination of this Subscriber Amendment are set forth in section 1. Upon termination of Authorized Court Data Services, the Subscriber shall perform the responsibilities set forth in paragraph 7(f) hereof.

4. SCOPE OF ACCESS TO COURT RECORDS LIMITED. Subscriber's access to and/or submission of the Court Records shall be limited to Authorized Court Data Services identified in an approved request form under section 3, above, and other Court Records necessary for Subscriber to use Authorized Court Data Services. Authorized Court Data Services shall only be used according to the instructions provided in corresponding Policies & Notices or other materials and only as necessary to assist Subscriber in the efficient performance of Subscriber's duties

required or authorized by law or court rule in connection with any civil, criminal, administrative, or arbitral proceeding in any Federal, State, or local court or agency or before any self-regulatory body. Subscriber's access to the Court Records for personal or non-official use is prohibited. Subscriber will not use or attempt to use Authorized Court Data Services in any manner not set forth in this Subscriber Amendment, Policies & Notices, or other Authorized Court Data Services documentation, and upon any such unauthorized use or attempted use the Court may immediately terminate this Subscriber Amendment without prior notice to Subscriber.

5. GUARANTEES OF CONFIDENTIALITY. Subscriber agrees:

a. To not disclose Court Confidential Information to any third party except where necessary to carry out the Subscriber's duties as required or authorized by law or court rule in connection with any civil, criminal, administrative, or arbitral proceeding in any Federal, State, or local court or agency or before any self-regulatory body.

b. To take all appropriate action, whether by instruction, agreement, or otherwise, to insure the protection, confidentiality and security of Court Confidential Information and to satisfy Subscriber's obligations under this Subscriber Amendment.

c. To limit the use of and access to Court Confidential Information to Subscriber's bona fide personnel whose use or access is necessary to effect the purposes of this Subscriber Amendment, and to advise each individual who is permitted use of and/or access to any Court Confidential Information of the restrictions upon disclosure and use contained in this Subscriber Amendment, requiring each individual who is permitted use of and/or access to Court Confidential Information to acknowledge in writing that the individual has read and understands such restrictions. Subscriber shall keep such acknowledgements on file for one year following termination of the Subscriber Amendment and/or CJDN Subscriber Agreement, whichever is longer, and shall provide the Court with access to, and copies of, such acknowledgements upon request. For purposes of this Subscriber Amendment, Subscriber's bona fide personnel shall mean individuals who are employees of Subscriber or provide services to Subscriber either on a voluntary basis or as independent contractors with Subscriber.

d. That, without limiting section 1 of this Subscriber Amendment, the obligations of Subscriber and its bona fide personnel with respect to the confidentiality and security of Court Confidential Information shall survive the termination of this Subscriber Amendment and the CJDN Subscriber Agreement and the termination of their relationship with Subscriber.

e. That, notwithstanding any federal or state law applicable to the nondisclosure obligations of Subscriber and Subscriber's bona fide personnel under this Subscriber Amendment, such obligations of Subscriber and Subscriber's bona fide personnel are founded independently on the provisions of this Subscriber Amendment.

6. APPLICABILITY TO PREVIOUSLY DISCLOSED COURT RECORDS. Subscriber acknowledges and agrees that all Authorized Court Data Services and related Court Records disclosed to Subscriber prior to the effective date of this Subscriber Amendment shall be subject to the provisions of this Subscriber Amendment.

7. LICENSE AND PROTECTION OF PROPRIETARY RIGHTS. During the term of this Subscriber Amendment, subject to the terms and conditions hereof, the Court hereby grants to Subscriber a nonexclusive, nontransferable, limited license to use Court Data Services Programs and Court Data Services Databases to access or receive the Authorized Court Data Services identified in an approved request form under section 3, above, and related Court Records. Court reserves the right to make modifications to the Authorized Court Data Services, Court Data Services Programs, and Court Data Services Databases, and related materials without notice to Subscriber. These modifications shall be treated in all respects as their previous counterparts.

a. Court Data Services Programs. Court is the copyright owner and licensor of the Court Data Services Programs. The combination of ideas, procedures, processes, systems, logic, coherence and methods of operation embodied within the Court Data Services Programs, and all information contained in documentation pertaining to the Court Data Services Programs, including but not limited to manuals, user documentation, and passwords, are trade secret information of Court and its licensors.

b. Court Data Services Databases. Court is the copyright owner and licensor of the Court Data Services Databases and of all copyrightable aspects and components thereof. All specifications and information pertaining to the Court Data Services Databases and their structure, sequence and organization, including without limitation data schemas such as the Court XML Schema, are trade secret information of Court and its licensors.

c. Marks. Subscriber shall neither have nor claim any right, title, or interest in or use of any trademark used in connection with Authorized Court Data Services, including but not limited to the marks “MNCIS” and “Odyssey.”

d. Restrictions on Duplication, Disclosure, and Use. Trade secret information of Court and its licensors will be treated by Subscriber in the same manner as Court Confidential Information. In addition, Subscriber will not copy any part of the Court Data Services Programs or Court Data Services Databases, or reverse engineer or otherwise attempt to discern the source code of the Court Data Services Programs or Court Data Services Databases, or use any trademark of Court or its licensors, in any way or for any purpose not specifically and expressly authorized by this Subscriber Amendment. As used herein, "trade secret information of Court and its licensors" means any information possessed by Court which derives independent economic value from not being generally known to, and not being readily ascertainable by proper means by, other persons who can obtain economic value from its disclosure or use. "Trade secret information of Court and its licensors" does not, however, include information which was known to Subscriber prior to Subscriber’s receipt thereof, either directly or indirectly, from Court or its licensors, information which is independently developed by Subscriber without reference to or use of information received from Court or its licensors, or information which would not qualify as a trade secret under Minnesota law. It will not be a violation of this section 7, sub-section d, for Subscriber to make up to one copy of training materials and configuration documentation, if any, for each individual authorized to access, use, or configure Authorized Court Data Services, solely for its own use in connection with this Subscriber Amendment. Subscriber will take all steps reasonably necessary to protect the copyright, trade secret, and trademark rights of Court and its licensors and Subscriber will advise its bona fide personnel who are permitted access to any of the Court Data Services Programs and Court Data Services Databases, and trade secret information of Court and its licensors, of the restrictions upon duplication, disclosure and use contained in this Subscriber Amendment.

e. Proprietary Notices. Subscriber will not remove any copyright or proprietary notices included in and/or on the Court Data Services Programs or Court Data Services Databases, related documentation, or trade secret information of Court and its licensors, or any part thereof, made available by Court directly or through the BCA, if any, and Subscriber will include in and/or on any copy of the Court Data Services Programs or Court Data Services Databases, or trade secret information of Court and its licensors and any documents pertaining thereto, the same copyright and other proprietary notices as appear on the copies made available to Subscriber by Court directly or through the BCA, except that copyright notices shall be updated and other proprietary notices added as may be appropriate.

f. Title; Return. The Court Data Services Programs and Court Data Services Databases, and related documentation, including but not limited to training and configuration material, if any, and logon account information and passwords, if any, made available by the Court to Subscriber directly or through the BCA and all copies, including partial copies, thereof are and remain the property of the respective licensor. Except as expressly provided in section 12.b., within ten days of the effective date of termination of this Subscriber Amendment or the CJDN Subscriber Agreement or within ten days of a request for termination of Authorized Court Data Service as described in section 4, Subscriber shall either: (i) uninstall and return any and all copies of the applicable Court Data Services Programs and Court Data Services Databases, and related documentation, including but not limited to training and configuration materials, if any, and logon account information, if any; or (2) destroy the same and certify in writing to the Court that the same have been destroyed.

8. INJUNCTIVE RELIEF. Subscriber acknowledges that the Court, Court's licensors, and DCA will be irreparably harmed if Subscriber's obligations under this Subscriber Amendment are not specifically enforced and that the Court, Court's licensors, and DCA would not have an adequate remedy at law in the event of an actual or threatened violation by Subscriber of its obligations. Therefore, Subscriber agrees that the Court, Court's licensors, and DCA shall be entitled to an injunction or any appropriate decree of specific performance for any actual or threatened violations or breaches by Subscriber or its bona fide personnel without the necessity of the Court, Court's licensors, or DCA showing actual damages or that monetary damages would not afford an adequate remedy. Unless Subscriber is an office, officer, agency, department, division, or bureau of the state of Minnesota, Subscriber shall be liable to the Court, Court's licensors, and DCA for reasonable attorneys fees incurred by the Court, Court's licensors, and DCA in obtaining any relief pursuant to this Subscriber Amendment.

9. LIABILITY. Subscriber and the Court agree that, except as otherwise expressly provided herein, each party will be responsible for its own acts and the results thereof to the extent authorized by law and shall not be responsible for the acts of any others and the results thereof. Liability shall be governed by applicable law. Without limiting the foregoing, liability of the Court and any Subscriber that is an office, officer, agency, department, division, or bureau of the state of Minnesota shall be governed by the provisions of the Minnesota Tort Claims Act, Minnesota Statutes, section 3.376, and other applicable law. Without limiting the foregoing, if Subscriber is a political subdivision of the state of Minnesota, liability of the Subscriber shall be governed by the provisions of Minn. Stat. Ch. 466 (Tort Liability, Political Subdivisions) or other applicable law. Subscriber and Court further acknowledge that the liability, if any, of the BCA is governed by a separate agreement between the Court and the BCA dated December 13, 2010 with DPS-M -0958.

10. AVAILABILITY. Specific terms of availability shall be established by the Court and communicated to Subscriber by the Court and/or the BCA. The Court reserves the right to terminate this Subscriber Amendment immediately and/or temporarily suspend Subscriber's Authorized Court Data Services in the event the capacity of any host computer system or legislative appropriation of funds is determined solely by the Court to be insufficient to meet the computer needs of the courts served by the host computer system.

11. [reserved]

12. ADDITIONAL USER OBLIGATIONS. The obligations of the Subscriber set forth in this section are in addition to the other obligations of the Subscriber set forth elsewhere in this Subscriber Amendment.

a. Judicial Policy Statement. Subscriber agrees to comply with all policies identified in Policies & Notices applicable to Court Records accessed by Subscriber using Authorized Court Data Services. Upon failure of the Subscriber to comply with such policies, the Court shall have the option of immediately suspending the Subscriber's Authorized Court Data Services on a temporary basis and/or immediately terminating this Subscriber Amendment.

b. Access and Use; Log. Subscriber shall be responsible for all access to and use of Authorized Court Data Services and Court Records by Subscriber's bona fide personnel or by means of Subscriber's equipment or passwords, whether or not Subscriber has knowledge of or authorizes such access and use. Subscriber shall also maintain a log identifying all persons to whom Subscriber has disclosed its Court Confidential Security and Activation Information, such as user ID(s) and password(s), including the date of such disclosure. Subscriber shall maintain such logs for a minimum period of six years from the date of disclosure, and shall provide the Court with access to, and copies of, such logs upon request. The Court may conduct audits of Subscriber's logs and use of Authorized Court Data Services and Court Records from time to time. Upon Subscriber's failure to maintain such logs, to maintain accurate logs, or to promptly provide access by the Court to such logs, the Court may terminate this Subscriber Amendment without prior notice to Subscriber.

c. Personnel. Subscriber agrees to investigate, at the request of the Court and/or the BCA, allegations of misconduct pertaining to Subscriber's bona fide personnel having access to or use of Authorized Court Data Services, Court Confidential Information, or trade secret information of the Court and its licensors where such persons are alleged to have violated the provisions of this Subscriber Amendment, Policies & Notices, Judicial Branch policies, or other security requirements or laws regulating access to the Court Records.

d. Minnesota Data Practices Act Applicability. If Subscriber is a Minnesota Government entity that is subject to the Minnesota Government Data Practices Act, Minn. Stat. Ch. 13, Subscriber acknowledges and agrees that: (1) the Court is not subject to Minn. Stat. Ch. 13 (see section 13.90) but is subject to the Rules of Public Access and other rules promulgated by the Minnesota Supreme Court; (2) Minn. Stat. section 13.03, subdivision 4(e) requires that Subscriber comply with the Rules of Public Access and other rules promulgated by the Minnesota Supreme Court for access to Court Records provided via the

BCA systems and tools under this Subscriber Amendment; (3) the use of and access to Court Records may be restricted by rules promulgated by the Minnesota Supreme Court, applicable state statute or federal law; and (4) these applicable restrictions must be followed in the appropriate circumstances.

13. FEES; INVOICES. Unless the Subscriber is an office, officer, department, division, agency, or bureau of the state of Minnesota, Subscriber shall pay the fees, if any, set forth in applicable Policies & Notices, together with applicable sales, use or other taxes. Applicable monthly fees commence ten (10) days after notice of approval of the request pursuant to section 3 of this Subscriber Amendment or upon the initial Subscriber transaction as defined in the Policies & Notices, whichever occurs earlier. When fees apply, the Court shall invoice Subscriber on a monthly basis for charges incurred in the preceding month and applicable taxes, if any, and payment of all amounts shall be due upon receipt of invoice. If all amounts are not paid within 30 days of the date of the invoice, the Court may immediately cancel this Subscriber Amendment without notice to Subscriber and pursue all available legal remedies. Subscriber certifies that funds have been appropriated for the payment of charges under this Subscriber Amendment for the current fiscal year, if applicable.

14. MODIFICATION OF FEES. Court may modify the fees by amending the Policies & Notices as provided herein, and the modified fees shall be effective on the date specified in the Policies & Notices, which shall not be less than thirty days from the publication of the Policies & Notices. Subscriber shall have the option of accepting such changes or terminating this Subscriber Amendment as provided in section 1 hereof.

15. WARRANTY DISCLAIMERS.

a. WARRANTY EXCLUSIONS. EXCEPT AS SPECIFICALLY AND EXPRESSLY PROVIDED HEREIN, COURT, COURT'S LICENSORS, AND DCA MAKE NO REPRESENTATIONS OR WARRANTIES OF ANY KIND, INCLUDING BUT NOT LIMITED TO THE WARRANTIES OF FITNESS FOR A PARTICULAR PURPOSE OR MERCHANTABILITY, NOR ARE ANY WARRANTIES TO BE IMPLIED, WITH RESPECT TO THE INFORMATION, SERVICES OR COMPUTER PROGRAMS MADE AVAILABLE UNDER THIS AGREEMENT.

b. ACCURACY AND COMPLETENESS OF INFORMATION. WITHOUT LIMITING THE GENERALITY OF THE PRECEDING PARAGRAPH, COURT, COURT'S LICENSORS, AND DCA MAKE NO WARRANTIES AS TO THE ACCURACY OR COMPLETENESS OF THE INFORMATION CONTAINED IN THE COURT RECORDS.

16. RELATIONSHIP OF THE PARTIES. Subscriber is an independent contractor and shall not be deemed for any purpose to be an employee, partner, agent or franchisee of the Court, Court's licensors, or DCA. Neither Subscriber nor the Court, Court's licensors, or DCA shall have the right nor the authority to assume, create or incur any liability or obligation of any kind, express or implied, against or in the name of or on behalf of the other.

17. NOTICE. Except as provided in section 2 regarding notices of or modifications to Authorized Court Data Services and Policies & Notices, any notice to Court or Subscriber

hereunder shall be deemed to have been received when personally delivered in writing or seventy-two (72) hours after it has been deposited in the United States mail, first class, proper postage prepaid, addressed to the party to whom it is intended at the address set forth on page one of this Agreement or at such other address of which notice has been given in accordance herewith.

18. NON-WAIVER. The failure by any party at any time to enforce any of the provisions of this Subscriber Amendment or any right or remedy available hereunder or at law or in equity, or to exercise any option herein provided, shall not constitute a waiver of such provision, remedy or option or in any way affect the validity of this Subscriber Amendment. The waiver of any default by either Party shall not be deemed a continuing waiver, but shall apply solely to the instance to which such waiver is directed.

19. FORCE MAJEURE. Neither Subscriber nor Court shall be responsible for failure or delay in the performance of their respective obligations hereunder caused by acts beyond their reasonable control.

20. SEVERABILITY. Every provision of this Subscriber Amendment shall be construed, to the extent possible, so as to be valid and enforceable. If any provision of this Subscriber Amendment so construed is held by a court of competent jurisdiction to be invalid, illegal or otherwise unenforceable, such provision shall be deemed severed from this Subscriber Amendment, and all other provisions shall remain in full force and effect.

21. ASSIGNMENT AND BINDING EFFECT. Except as otherwise expressly permitted herein, neither Subscriber nor Court may assign, delegate and/or otherwise transfer this Subscriber Amendment or any of its rights or obligations hereunder without the prior written consent of the other. This Subscriber Amendment shall be binding upon and inure to the benefit of the Parties hereto and their respective successors and assigns, including any other legal entity into, by or with which Subscriber may be merged, acquired or consolidated.

22. GOVERNING LAW. This Subscriber Amendment shall in all respects be governed by and interpreted, construed and enforced in accordance with the laws of the United States and of the State of Minnesota.

23. VENUE AND JURISDICTION. Any action arising out of or relating to this Subscriber Amendment, its performance, enforcement or breach will be venued in a state or federal court situated within the State of Minnesota. Subscriber hereby irrevocably consents and submits itself to the personal jurisdiction of said courts for that purpose.

24. INTEGRATION. This Subscriber Amendment contains all negotiations and agreements between the parties. No other understanding regarding this Subscriber Amendment, whether written or oral, may be used to bind either party, provided that all terms and conditions of the CJDN Subscriber Agreement and all previous amendments remain in full force and effect except as supplemented or modified by this Subscriber Amendment.

IN WITNESS WHEREOF, the Parties have, by their duly authorized officers, executed this Subscriber Amendment in duplicate, intending to be bound thereby.

1. SUBSCRIBER (AGENCY)

Subscriber must attach written verification of authority to sign on behalf of and bind the entity, such as an opinion of counsel or resolution.

Name: _____
(PRINTED)

Signed: _____

Title: _____
(with delegated authority)

Date: _____

Name: _____
(PRINTED)

Signed: _____

Title: _____
(with delegated authority)

Date: _____

2. DEPARTMENT OF PUBLIC SAFETY, BUREAU OF CRIMINAL APPREHENSION

Name: _____
(PRINTED)

Signed: _____

Title: _____
(with delegated authority)

Date: _____

3. COMMISSIONER OF ADMINISTRATION

delegated to Materials Management Division

By: _____

Date: _____

4. COURTS

Authority granted to Bureau of Criminal Apprehension

Name: _____
(PRINTED)

Signed: _____

Title: _____
(with authorized authority)

Date: _____

State of Minnesota
Joint Powers Agreement

This Agreement is between the State of Minnesota, acting through its Department of Public Safety on behalf of the Bureau of Criminal Apprehension ("BCA"), and the City of Chaska on behalf of its Police Department ("Governmental Unit"). The BCA and the Governmental Unit may be referred to jointly as "Parties."

Recitals

Under Minn. Stat. § 471.59, the BCA and the Governmental Unit are empowered to engage in agreements that are necessary to exercise their powers. Under Minn. Stat. § 299C.46, the BCA must provide a criminal justice data communications network to benefit political subdivisions as defined under Minn. Stat. § 299C.46, subd. 2 and subd. 2(a). The Governmental Unit is authorized by law to utilize the criminal justice data communications network pursuant to the terms set out in this Agreement. In addition, BCA either maintains repositories of data or has access to repositories of data that benefit authorized political subdivisions in performing their duties. The Governmental Unit wants to access data in support of its official duties.

The purpose of this Agreement is to create a method by which the Governmental Unit has access to those systems and tools for which it has eligibility, and to memorialize the requirements to obtain access and the limitations on the access.

Agreement

1 Term of Agreement

1.1 Effective Date. This Agreement is effective on the date the BCA obtains all required signatures under Minn. Stat. § 16C.05, subdivision 2.

1.2 Expiration Date. This Agreement expires five years from the date it is effective.

2 Agreement Between the Parties

2.1 General Access. BCA agrees to provide Governmental Unit with access to the Minnesota Criminal Justice Data Communications Network (CJDN) and those systems and tools which the Governmental Unit is authorized by law to access via the CJDN for the purposes outlined in Minn. Stat. § 299C.46.

2.2 Methods of Access.

The BCA offers three (3) methods of access to its systems and tools. The methods of access are:

A. **Direct access** occurs when individual users at the Governmental Unit use the Governmental Unit's equipment to access the BCA's systems and tools. This is generally accomplished by an individual user entering a query into one of BCA's systems or tools.

B. **Indirect Access** occurs when individual users at the Governmental Unit go to another Governmental Unit to obtain data and information from BCA's systems and tools. This method of access generally results in the Governmental Unit with indirect access obtaining the needed data and information in a physical format like a paper report.

C. **Computer-to-Computer System Interface** occurs when the Governmental Unit's computer exchanges data and information with BCA's computer systems and tools using an interface. Without limitation, interface types include: state message switch, web services, enterprise service bus and message queuing.

For purposes of this Agreement, Governmental Unit employees or contractors may use any of these methods to use BCA's systems and tools as described in this Agreement. Governmental Unit will select a

method of access and can change the methodology following the process in Clause 2.10.

2.3 Federal Systems Access. In addition, pursuant to 28 CFR §20.30-38 and Minn. Stat. §299C.58, BCA may provide Governmental Unit with access to the Federal Bureau of Investigation (FBI) National Crime Information Center.

2.4 Governmental Unit Policies. Both the BCA and the FBI's Criminal Justice Information Systems (FBI-CJIS) have policies, regulations and laws on access, use, audit, dissemination, hit confirmation, logging, quality assurance, screening (pre-employment), security, timeliness, training, use of the system**,** and validation. Governmental Unit has created its own policies to ensure that Governmental Unit's employees and contractors comply with all applicable requirements. Governmental Unit ensures this compliance through appropriate enforcement. These BCA and FBI-CJIS policies and regulations, as amended and updated from time to time, are incorporated into this Agreement by reference. The policies are available at https://bcanextest.x.state.mn.us/launchpad/.

2.5 Governmental Unit Resources. To assist Governmental Unit in complying with the federal and state requirements on access to and use of the various systems and tools, information is available at https://sps.x.state.mn.us/sites/bcaservicecatalog/default.aspx. Additional information on appropriate use is found in the Minnesota Bureau of Criminal Apprehension Policy on Appropriate Use of Systems and Data available at https://bcanextest.x.state.mn.us/launchpad/cjisdocs/docs.cgi?cmd=FS&ID=795&TYPE=DOCS.

2.6 Access Granted.

A. Governmental Unit is granted permission to use all current and future BCA systems and tools for which Governmental Unit is eligible. Eligibility is dependent on Governmental Unit (i) satisfying all applicable federal or state statutory requirements; (ii) complying with the terms of this Agreement; and (iii) acceptance by BCA of Governmental Unit's written request for use of a specific system or tool.

B. To facilitate changes in systems and tools, Governmental Unit grants its Authorized Representative authority to make written requests for those systems and tools provided by BCA that the Governmental Unit needs to meet its criminal justice obligations and for which Governmental Unit is eligible.

2.7 Future Access. On written request from the Governmental Unit, BCA also may provide Governmental Unit with access to those systems or tools which may become available after the signing of this Agreement, to the extent that the access is authorized by applicable state and federal law. Governmental Unit agrees to be bound by the terms and conditions contained in this Agreement that when utilizing new systems or tools provided under this Agreement.

2.8 Limitations on Access. BCA agrees that it will comply with applicable state and federal laws when making information accessible. Governmental Unit agrees that it will comply with applicable state and federal laws when accessing, entering, using, disseminating, and storing data. Each party is responsible for its own compliance with the most current applicable state and federal laws.

2.9 Supersedes Prior Agreements. This Agreement supersedes any and all prior agreements between the BCA and the Governmental Unit regarding access to and use of systems and tools provided by BCA.

2.10 Requirement to Update Information. The parties agree that if there is a change to any of the information whether required by law or this Agreement, the party will send the new information to the other party in writing within 30 days of the change. This clause does not apply to changes in systems or tools provided under this Agreement.

This requirement to give notice additionally applies to changes in the individual or organization serving the Governmental Unit as its prosecutor. Any change in performance of the prosecutorial function must be provided to the BCA in writing by giving notice to the Service Desk, BCA.ServiceDesk@state.mn.us.

2.11 Transaction Record. The BCA creates and maintains a transaction record for each exchange of data utilizing its systems and tools. In order to meet FBI-CJIS requirements and to perform the audits described in Clause 7, there must be a method of identifying which individual users at the Governmental Unit conducted a

particular transaction.

If Governmental Unit uses either direct access as described in Clause 2.2A or indirect access as described in Clause 2.2B, BCA's transaction record meets FBI-CJIS requirements.

When Governmental Unit's method of access is a computer-to-computer interface as described in Clause 2.2C, the Governmental Unit must keep a transaction record sufficient to satisfy FBI-CJIS requirements and permit the audits described in Clause 7 to occur.

If a Governmental Unit accesses data from the Driver and Vehicle Services Division in the Minnesota Department of Public Safety and keeps a copy of the data, Governmental Unit must have a transaction record of all subsequent access to the data that are kept by the Governmental Unit. The transaction record must include the individual user who requested access, and the date, time and content of the request. The transaction record must also include the date, time and content of the response along with the destination to which the data were sent. The transaction record must be maintained for a minimum of six (6) years from the date the transaction occurred and must be made available to the BCA within one (1) business day of the BCA's request.

2.12 Court Information Access. Certain BCA systems and tools that include access to and/or submission of Court Records may only be utilized by the Governmental Unit if the Governmental Unit completes the Court Data Services Subscriber Amendment, which upon execution will be incorporated into this Agreement by reference. These BCA systems and tools are identified in the written request made by the Governmental Unit under Clause 2.6 above. The Court Data Services Subscriber Amendment provides important additional terms, including but not limited to privacy (see Clause 8.2, below), fees (see Clause 3 below), and transaction records or logs, that govern Governmental Unit's access to and/or submission of the Court Records delivered through the BCA systems and tools.

2.13 Vendor Personnel Screening. The BCA will conduct all vendor personnel screening on behalf of Governmental Unit as is required by the FBI CJIS Security Policy. The BCA will maintain records of the federal, fingerprint-based background check on each vendor employee as well as records of the completion of the security awareness training that may be relied on by the Governmental Unit.

3 Payment

The Governmental Unit currently accesses the criminal justice data communications network described in Minn. Stat. §299C.46. The bills are sent annually for a total annual cost of One Thousand Eighty Dollars ($1,080.00).

The Governmental Unit will identify its contact person for billing purposes, and will provide updated information to BCA's Authorized Representative within ten business days when this information changes.

If Governmental Unit chooses to execute the Court Data Services Subscriber Amendment referred to in Clause 2.12 in order to access and/or submit Court Records via BCA's systems, additional fees, if any, are addressed in that amendment.

4 Authorized Representatives

The BCA's Authorized Representative is the person below, or her successor:

Name:	Dana Gotz, Deputy Superintendent
Address:	Minnesota Department of Public Safety; Bureau of Criminal Apprehension 1430 Maryland Avenue Saint Paul, MN 55106
Telephone:	651.793.1007

Email Address: Dana.Gotz@state.mn.us

The Governmental Unit's Authorized Representative is the person below, or his/her successor:

Name: Chief Ryan Seibert
Address: 2 City Hall Plaza
Chaska, MN 55318
Telephone: 952.448.4200
Email Address: rseibert@chaskamn.com

5 Assignment, Amendments, Waiver, and Agreement Complete

5.1 Assignment. Neither party may assign nor transfer any rights or obligations under this Agreement.

5.2 Amendments. Any amendment to this Agreement, except those described in Clauses 2.6 and 2.7 above must be in writing and will not be effective until it has been signed and approved by the same parties who signed and approved the original agreement, their successors in office, or another individual duly authorized.

5.3 Waiver. If either party fails to enforce any provision of this Agreement, that failure does not waive the provision or the right to enforce it.

5.4 Agreement Complete. This Agreement contains all negotiations and agreements between the BCA and the Governmental Unit. No other understanding regarding this Agreement, whether written or oral, may be used to bind either party.

6 Liability

Each party will be responsible for its own acts and behavior and the results thereof and shall not be responsible or liable for the other party's actions and consequences of those actions. The Minnesota Torts Claims Act, Minn. Stat. § 3.736 and other applicable laws govern the BCA's liability. The Minnesota Municipal Tort Claims Act, Minn. Stat. Ch. 466 and other applicable laws, governs the Governmental Unit's liability.

7 Audits

7.1 Under Minn. Stat. § 16C.05, subd. 5, the Governmental Unit's books, records, documents, internal policies and accounting procedures and practices relevant to this Agreement are subject to examination by the BCA, the State Auditor or Legislative Auditor, as appropriate, for a minimum of six years from the end of this Agreement.

Under Minn. Stat. § 6.551, the State Auditor may examine the books, records, documents, and accounting procedures and practices of BCA. The examination shall be limited to the books, records, documents, and accounting procedures and practices that are relevant to this Agreement.

7.2 Under applicable state and federal law, the Governmental Unit's records are subject to examination by the BCA to ensure compliance with laws, regulations and policies about access, use, and dissemination of data.

7.3 If the Governmental Unit accesses federal databases, the Governmental Unit's records are subject to examination by the FBI and BCA; the Governmental Unit will cooperate with FBI and BCA auditors and make any requested data available for review and audit.

7.4 If the Governmental Unit accesses state databases, the Governmental Unit's records are subject to examination by the BCA: the Governmental Unit will cooperate with the BCA auditors and make any requested data available for review and audit.

7.5 To facilitate the audits required by state and federal law, Governmental Unit is required to have an inventory of the equipment used to access the data covered by this Agreement and the physical location of each.

8 Government Data Practices

8.1 BCA and Governmental Unit. The Governmental Unit and BCA must comply with the Minnesota Government Data Practices Act, Minn. Stat. Ch. 13, as it applies to all data accessible under this Agreement, and as it applies to all data created, collected, received, stored, used, maintained, or disseminated by the Governmental Unit under this Agreement. The remedies of Minn. Stat. §§ 13.08 and 13.09 apply to the release of the data referred to in this clause by either the Governmental Unit or the BCA.

8.2 Court Records. If Governmental Unit chooses to execute the Court Data Services Subscriber Amendment referred to in Clause 2.12 in order to access and/or submit Court Records via BCA's systems, the following provisions regarding data practices also apply. The Court is not subject to Minn. Stat. Ch. 13 but is subject to the *Rules of Public Access to Records of the Judicial Branch* promulgated by the Minnesota Supreme Court. All parties acknowledge and agree that Minn. Stat. § 13.03, subdivision 4(e) requires that the BCA and the Governmental Unit comply with the *Rules of Public Access* for those data received from Court under the Court Data Services Subscriber Amendment. All parties also acknowledge and agree that the use of, access to or submission of Court Records, as that term is defined in the Court Data Services Subscriber Amendment, may be restricted by rules promulgated by the Minnesota Supreme Court, applicable state statute or federal law. All parties acknowledge and agree that these applicable restrictions must be followed in the appropriate circumstances.

9 Investigation of Alleged Violations; Sanctions

For purposes of this clause, "Individual User" means an employee or contractor of Governmental Unit.

9.1 Investigation. The Governmental Unit and BCA agree to cooperate in the investigation and possible prosecution of suspected violations of federal and state law referenced in this Agreement. Governmental Unit and BCA agree to cooperate in the investigation of suspected violations of the policies and procedures referenced in this Agreement. When BCA becomes aware that a violation may have occurred, BCA will inform Governmental Unit of the suspected violation, subject to any restrictions in applicable law. When Governmental Unit becomes aware that a violation has occurred, Governmental Unit will inform BCA subject to any restrictions in applicable law.

9.2 Sanctions Involving Only BCA Systems and Tools.

The following provisions apply to BCA systems and tools not covered by the Court Data Services Subscriber Amendment. None of these provisions alter the Governmental Unit internal discipline processes, including those governed by a collective bargaining agreement.

9.2.1 For BCA systems and tools that are not covered by the Court Data Services Subscriber Amendment, Governmental Unit must determine if and when an involved Individual User's access to systems or tools is to be temporarily or permanently eliminated. The decision to suspend or terminate access may be made as soon as alleged violation is discovered, after notice of an alleged violation is received, or after an investigation has occurred. Governmental Unit must report the status of the Individual User's access to BCA without delay. BCA reserves the right to make a different determination concerning an Individual User's access to systems or tools than that made by Governmental Unit and BCA's determination controls.

9.2.2 If BCA determines that Governmental Unit has jeopardized the integrity of the systems or tools covered in this Clause 9.2, BCA may temporarily stop providing some or all the systems or tools under this Agreement until the failure is remedied to the BCA's satisfaction. If Governmental Unit's failure is continuing or repeated, Clause 11.1 does not apply and BCA may terminate this Agreement immediately.

9.3 Sanctions Involving Only Court Data Services

The following provisions apply to those systems and tools covered by the Court Data Services Subscriber Amendment, if it has been signed by Governmental Unit. As part of the agreement between the Court and the BCA for the delivery of the systems and tools that are covered by the Court Data Services Subscriber

Amendment, BCA is required to suspend or terminate access to or use of the systems and tools either on its own initiative or when directed by the Court. The decision to suspend or terminate access may be made as soon as an alleged violation is discovered, after notice of an alleged violation is received, or after an investigation has occurred. The decision to suspend or terminate may also be made based on a request from the Authorized Representative of Governmental Unit. The agreement further provides that only the Court has the authority to reinstate access and use.

9.3.1 Governmental Unit understands that if it has signed the Court Data Services Subscriber Amendment and if Governmental Unit's Individual Users violate the provisions of that Amendment, access and use will be suspended by BCA or Court. Governmental Unit also understands that reinstatement is only at the direction of the Court.

9.3.2 Governmental Unit further agrees that if Governmental Unit believes that one or more of its Individual Users have violated the terms of the Amendment, it will notify BCA and Court so that an investigation as described in Clause 9.1 may occur.

10 Venue

Venue for all legal proceedings involving this Agreement, or its breach, must be in the appropriate state or federal court with competent jurisdiction in Ramsey County, Minnesota.

11 Termination

11.1 Termination. The BCA or the Governmental Unit may terminate this Agreement at any time, with or without cause, upon 30 days' written notice to the other party's Authorized Representative.

11.2 Termination for Insufficient Funding. Either party may immediately terminate this Agreement if it does not obtain funding from the Minnesota Legislature, or other funding source; or if funding cannot be continued at a level sufficient to allow for the payment of the services covered here. Termination must be by written notice to the other party's authorized representative. The Governmental Unit is not obligated to pay for any services that are provided after notice and effective date of termination. However, the BCA will be entitled to payment, determined on a pro rata basis, for services satisfactorily performed to the extent that funds are available. Neither party will be assessed any penalty if the agreement is terminated because of the decision of the Minnesota Legislature, or other funding source, not to appropriate funds. Notice of the lack of funding must be provided within a reasonable time of the affected party receiving that notice.

12 Continuing Obligations

The following clauses survive the expiration or cancellation of this Agreement: Liability; Audits; Government Data Practices; 9. Investigation of Alleged Violations; Sanctions; and Venue.

THE BALANCE OF THIS PAGE INTENTIONALLY LEFT BLANK

The Parties indicate their agreement and authority to execute this Agreement by signing below.

1. GOVERNMENTAL UNIT

Name: _____
(PRINTED)

Signed: _____

Title: _____
(with delegated authority)

Date: _____

Name: _____
(PRINTED)

Signed: _____

Title: _____
(with delegated authority)

Date: _____

2. DEPARTMENT OF PUBLIC SAFETY, BUREAU OF CRIMINAL APPREHENSION

Name: _____
(PRINTED)

Signed: _____

Title: _____
(with delegated authority)

Date: _____

3. COMMISSIONER OF ADMINISTRATION
As delegated to the Office of State Procurement

By: _____

Date: _____

REQUEST FOR ACTION
CHASKA CITY COUNCIL
02/27/2023

Subject: **Public Hearing to Consider Certification of Spring 2023 Delinquent Utilities**

Reviewed By: Noel Graczyk, Administrative Services Director

Prepared By: Matt Burt, Accountant II
Wendy Hagen, Customer Relations Supervisor

The City semi-annually prepares a special assessment rolls of delinquent utilities and unpaid miscellaneous fees. Fees assessed are typically delinquent public utilities but there may also be unpaid mowing fees, alarm fees, and connection fees. By doing this, the City ensures that utility payments that are past due are being collected by specific households upon sale of a home. Utility billing accounts to be assessed are any that have total balance of $50.00 or more and are 90 days or more delinquent.

Also included on the special assessment rolls for delinquent utility charges are single-family rental properties. This allows the City to guarantee collection of delinquent fees that tenants have incurred as part of property taxes of the owner. Rental properties are only subject to assessments for water, sewer, and stormwater charges 90 days or more delinquent.

At the time of the initial mailing, 47 utility billing accounts were notified that they were subject to being assessed. Property owners and tenants were provided at least 30 days mailed notice of a public hearing to consider certification of fees to Carver County for unpaid charges as listed in the notice and were given the opportunity to pay their delinquencies prior to the public hearing. The total of the initial rolls at time of mailed notice was as follows:

Delinquent Stormwater Fees:	$ 3,306.26
Delinquent Electric Fees:	$ 6,390.72
Delinquent Sewer Fees:	$ 1,139.22
Delinquent Water Fees:	$ 1,469.53
Total Delinquent Utility Fees:	$12,305.73

Based on payments made up to this public hearing, there are currently 28 accounts still delinquent totaling as follows:

Delinquent Stormwater Fees:	$ 2,774.96
Delinquent Electric Fees:	$ 3,348.76
Delinquent Sewer Fees:	$ 422.82
Delinquent Water Fees:	$ 336.87
Total Delinquent Utility Fees:	$ 6,979.68

The Spring 2023 special assessment roll for first year payable 2024 of unpaid utility charges is shown as Exhibits A through D and are attached to the proposed resolution. Should Council adopt the resolution, the rolls will be certified to Carver County for collection with payable 2024 property taxes. Charges are proposed

to be certified for a period of one-year at 5.00% interest and will include the City's 1.5% special assessment administrative fee.

Staff recommends approval of certification of the unpaid charges.

CITY COUNCIL ACTION REQUESTED

Motion to Approve a Resolution 2023-17 approving certification of delinquent utilities and miscellaneous unpaid charges to Carver County for collection with the payable 2024 property taxes.

CITY OF CHASKA
CARVER COUNTY,

MINNESOTA RESOLUTION

DATE 02/27/2022 RESOLUTION NO. 2023-17

MOTION BY COUNCILMEMBER _____ SECOND BY COUNCILMEMBER _____

A Resolution Approving Certification to Carver County of Spring 2023 Unpaid Delinquent Public Utilities

---

WHERAS, pursuant to proper notice duly given as required by law, the Council has met and heard and passed upon objections to the proposed certification of unpaid delinquent storm water, sewer, water, and/or electric utilities;

NOW, THEREFORE, BE IT RESOLVED, by the City Council of the City of Chaska, Minnesota, as follows:

1. Such proposed charges, a copy of which is attached hereto and made a part hereof as Exhibits A through D, are hereby accepted and shall constitute a charge against the lands named therein.

2. Such charges shall be payable in an annual installment that shall include both principal and interest, extending over a period of one (1) year, payable on or before the first Monday in January 2024, and shall bear interest at a rate of five (5) percent per annum from the date of adoption of this resolution.

3. The owner of any property so charged may, at any time prior to certification to the Carver County Taxpayer Services Department, pay the entire delinquent amount against such property, with interest accrued to the date of payment, to the City Clerk, except that no interest shall be charged if the entire amount is paid within 30 days from the adoption of this resolution. The right to partially prepay the delinquent charges is not available.

4. The Clerk shall forthwith transmit a certified duplicate of this roll to the Carver County Taxpayers Services Department to be extended on the property tax list of the County and such charges shall be collected and paid over in the same manner as other municipal taxes.

Passed and adopted by the City Council of the City of Chaska, Minnesota, this 27th day of February, 2023.

_____
Mike Huang, Mayor Pro Tem

Attest:_____
Deputy Clerk

Exhibit A

CERTIFICATION OF DELINQUENT STORMWATER ACCOUNTS

Special Assessment Terms

S/A Code:	302402	Term:	1 year
Roll Adopted:	2/27/2023	Annual Interest Rate:	5.00%
Year Payable:	2024	Extra Days Interest:	307

PID	Property Address	Name	Fee
30.0081300	401 HICKORY ST N	CONSTRUCTION DDK	$ 173.00
30.0500831	402 6TH ST E	CATHERINE TARBELL	$ 239.00
30.0500940	523 4TH ST E	MATTHEW SCHMID	$ 106.00
30.0501770	316 N CEDAR ST	JESSE WRIGHT	$ 13.00
30.0502300	208 N MAPLE ST	BRANDON BRINK	$ 13.00
30.0504770	215 1ST ST W	KURT SWANSON	$ 273.00
30.0505300	121 HICKORY ST N	JULIANNE SMITH	$ 239.00
30.0610160	3220 JULIAN DR	NICOLE POMIJE	$ 1.00
30.1160190	338 BRICKYARD DR	SANTOSHI NAIDU	$ 4.00
30.1380040	1300 CRYSTAL LN	KENNETH SCHULTZ	$ 822.00
30.2200300	517 SATORI WAY	RAMON ROGERS	$ 1.00
30.2420100	212 CHERITA DR	CAROL PUMPER	$ 12.00
30.2650730	595 DRESDEN DR	NICHOLAS STORM	$ 228.00
30.3450300	1576 MILLPOND CT	KRISS TYSON	$ 65.00
30.3580070	110154 STANFORD CIR	RONALD BORG	$ 117.00
30.3850380	112508 RAMSEY CT	KEVIN FAFINSKI	$ 106.00
30.4890690	488 WILDERNESS DR	HUGH J TUNSTEAD	$ 9.00
30.5570360	930 COLE ST	JEANNE SHINGLEDECKER	$ 39.00
30.5570420	972 HELDT ST	RICHARD PEARSON	$ 8.00
30.5820160	1466 CLOVER PRESERVE LN	TLG	$ 1.00
30.6150050	602 STOUGHTON AVE	MARTA ANDERSON	$ 239.00
30.6710603	2165 SHAMROCK PL	JOSEPH MERTEN	$ 49.00
30.6711601	1956 SHAMROCK PL	PAMELA SCHROEDER	$ 2.00
30.6840340	2195 GRIMM RD	EUN YOUNG SONG	$ 71.00
		TOTAL TO CERTIFY TO CARVER COUNTY	**$ 2,830.00**

(INCLUDES 1.5% SPECIAL ASSESSMENT FEE)

Exhibit B

CERTIFICATION OF DELINQUENT ELECTRIC ACCOUNTS

Special Assessment Terms

S/A Code:	302402	Term:	1 year
Roll Adopted:	2/27/2023	Annual Interest Rate:	5.00%
Year Payable:	2024	Extra Days Interest:	307

PID	Property Address	Name	Fee
30.0501770	316 N CEDAR ST	JESSE WRIGHT	$ 290.00
30.0502300	208 N MAPLE ST	BRANDON BRINK	$ 961.00
30.0610160	3220 JULIAN DR	NICOLE POMIJE	$ 112.00
30.0780203	114200 HUNDERTMARK RD	SVETLANA ZELENYUK	$ 12.00
30.0780310	114200 HUNDERTMARK RD	OXANA WIELAND	$ 51.00
30.1160190	338 BRICKYARD DR	SANTOSHI NAIDU	$ 63.00
30.2200300	517 SATORI WAY	RAMON ROGERS	$ 232.00
30.2420100	212 CHERITA DR	CAROL PUMPER	$ 62.00
30.3580070	110154 STANFORD CIR	RONALD BORG	$ 413.00
30.4880740	370 WILDERNESS DR	BRENDA PETERSMEYER	$ 35.00
30.4890690	488 WILDERNESS DR	HUGH J TUNSTEAD	$ 513.00
30.5570420	972 HELDT ST	RICHARD PEARSON	$ 415.00
30.5820160	1466 CLOVER PRESERVE LN	TLG	$ 69.00
30.6711601	1956 SHAMROCK PL	PAMELA SCHROEDER	$ 178.00
		TOTAL TO CERTIFY TO CARVER COUNTY	**$ 3,406.00**

(INCLUDES 1.5% SPECIAL ASSESSMENT FEE)

Exhibit C

CERTIFICATION OF DELINQUENT SEWER ACCOUNTS

Special Assessment Terms

S/A Code:	302402	Term:	1 year
Roll Adopted:	2/27/2023	Annual Interest Rate:	5.00%
Year Payable:	2024	Extra Days Interest:	307

PID	Property Address	Name	Fee	
30.0501770	316 N CEDAR ST	JESSE WRIGHT	$	14.00
30.0502300	208 N MAPLE ST	BRANDON BRINK	$	51.00
30.0610160	3220 JULIAN DR	NICOLE POMIJE	$	2.00
30.1160190	338 BRICKYARD DR	SANTOSHI NAIDU	$	43.00
30.2200300	517 SATORI WAY	RAMON ROGERS	$	2.00
30.2420100	212 CHERITA DR	CAROL PUMPER	$	1.00
30.2650730	595 DRESDEN DR	NICHOLAS STORM	$	70.00
30.3580070	110154 STANFORD CIR	RONALD BORG	$	123.00
30.4890690	488 WILDERNESS DR	HUGH J TUNSTEAD	$	72.00
30.5570420	972 HELDT ST	RICHARD PEARSON	$	55.00
30.5820160	1466 CLOVER PRESERVE LN	TLG	$	2.00
		TOTAL TO CERTIFY TO CARVER COUNTY	**$**	**435.00**

(INCLUDES 1.5% SPECIAL ASSESSMENT FEE)

Exhibit D

CERTIFICATION OF DELINQUENT WATER ACCOUNTS

Special Assessment Terms

S/A Code:	302402	Term:	1 year
Roll Adopted:	2/27/2023	Annual Interest Rate:	5.00%
Year Payable:	2024	Extra Days Interest:	307

PID	Property Address	Name	Fee
30.0501770	316 N CEDAR ST	JESSE WRIGHT	$ 10.00
30.0502300	208 N MAPLE ST	BRANDON BRINK	$ 60.00
30.0610160	3220 JULIAN DR	NICOLE POMIJE	$ 5.00
30.1160190	338 BRICKYARD DR	SANTOSHI NAIDU	$ 31.00
30.2200300	517 SATORI WAY	RAMON ROGERS	$ 1.00
30.2420100	212 CHERITA DR	CAROL PUMPER	$ 6.00
30.2650730	595 DRESDEN DR	NICHOLAS STORM	$ 45.00
30.3580070	110154 STANFORD CIR	RONALD BORG	$ 95.00
30.4890690	488 WILDERNESS DR	HUGH J TUNSTEAD	$ 48.00
30.5570420	972 HELDT ST	RICHARD PEARSON	$ 42.00
30.5820160	1466 CLOVER PRESERVE LN	TLG	$ 4.00
		TOTAL TO CERTIFY TO CARVER COUNTY	**$ 347.00**

(INCLUDES 1.5% SPECIAL ASSESSMENT FEE)

REQUEST FOR ACTION
CHASKA CITY COUNCIL
02/27/2023

Subject: **Phase II of Professional Services Agreement for Facility Naming Rights and Sponsorship**

Prepared By: Marshall Grange, Parks and Recreation Director

Background:

In May of 2021, staff met with the Chaska Parks and Recreation Commission and Chaska City Council to introduce the idea of pursuing facility sponsorship and naming rights as a potential new revenue source for Chaska recreational facilities. To date, there has not been any formal sponsorship, advertising or naming rights sold which presents an opportunity to start with a clean slate. Staff shared some recent municipal/county examples to demonstrate the success and potential revenue in naming rights and sponsorships which included:

- HealthEast Sports Center (owned by City of Woodbury)
- TCO Sports Garden (owned by Ramsey County)
- Red Baron Arena (owned by City of Marshall)
- Northwoods Credit Union Arena (owned by City of Cloquet)
- Furniture and Things Community Center (owned by City of Elk River)

Staff discussed the benefits of working with a professional consulting firm of which both the Parks and Recreation Commission and the City Council expressed support in contracting with a consultant to pursue sponsorship and naming rights potential further.

On July 12, 2021, request for proposals were sent directly to six consulting firms and was available on the City's website.

On July 30, 2021, the request for proposals were due. The City received three proposals; however, GPS consulting firm withdrew their proposal.

At the August 10, 2021, Chaska Parks and Recreation Commission meeting, staff made the recommendation to interview the two consulting firms as the next step and asked that two Parks and Recreation Commission members participate in the interview process.

On September 7, 2021, Parks & Recreation Director, Marshall Grange, along with Assistant to the Director, Mary Monteith, and Park Board members Dave Downs and Zach Saueressig interviewed Chris Potenza who represented Front Burner Sports & Entertainment followed by Kyle Canter who represented The Superlative Group.

As noted in the RFP, the Chaska Curling Center will be the initial focus for the selected consultant. The primary goal for obtaining naming rights and sponsorship revenue for the Chaska Curling & Event Center is to have a funding source to replace large capital items and maintain a high-quality experience into the future. Naming rights and sponsorship revenues can also help to fund an expansion of the player's lounge area to create more viewing, provide additional food and beverage service area, and effectively host more bonspiels and corporate events.

While the selected consultant will assist the City in valuating facility assets, creating promotion materials and negotiating agreements, the City Council will have final approval of all agreements.

On October 12, 2021, the Chaska Parks and Recreation Commission passed a motion recommending City Council authorize staff to enter into a professional services agreement with The Superlative Group.

In preparation for the City Council meeting, staff will work with city attorney, Mike Melchert, and The Superlative Group's attorney, Aaron Caputo, to review, edit and finalize the professional services agreement to be considered for approval.

On February 7, 2022, Chaska City Council approved the recommendation authorizing staff to enter into a service agreement for facility naming rights and sponsorship with the Superlative Group.

On March 15, 2022, staff met with the Superlative Group to begin phase 1 of the agreement to develop an asset inventory and valuation report.

On August 19, 2022, the Superlative Group provided staff with a final asset inventory and valuation report.

On October 3, 2022, Chaska City Council and the Parks and Recreation Commission met with staff and the Superlative Group in a work session to review and discuss the asset inventory and valuation report.

On January 30, 2023, Chaska City Council and the Parks and Recreation Commission met with staff and the Superlative Group to discuss entering into phase II of the service agreement for facility naming rights and sponsorships.

On February 13, 2023, the Parks and Recreation Commission passed a motion recommending City Council authorize staff to enter into phase II of the professional services agreement for the facility naming rights and sponsorship with The Superlative Group.

Staff recommended that while there are a variety of opportunities for naming rights and sponsorships, that the initial focus should be naming rights for the Chaska Curling and Event Center and could include naming/sponsorship of the player's lounge within the curling center and the Fire and Ice Bonspiel Festival.

The primary goal for obtaining naming rights and sponsorship revenue for the Chaska Curling & Event Center is to have a funding source to replace large capital items and maintain a high-quality experience into the future. Naming rights and sponsorship revenues can also help to fund an expansion of the player's lounge area to create more viewing, provide additional food and beverage service area, and effectively host more bonspiels and corporate events.

As a part of phase II, the Superlative Group, in coordination with staff, will begin to contact businesses about the opportunity for naming rights and sponsorship at the Curling and Event Center to gauge interest. The overall naming rights of the Chaska Curling & Event Center will require a larger investment; therefore, local and regional businesses will be considered in this search. There will be some in-facility sponsorship opportunities that will require a smaller investment of which local businesses will be prioritized for those opportunities.

All naming rights and sponsorship agreements will require City Council approval.

Staff recommendation:
Staff recommends the City enter into phase II of the facility naming rights and sponsorship agreement with the Superlative Group.

CITY COUNCIL ACTION REQUESTED
Recommend that City Council authorize staff to enter into phase II of the professional services agreement for facility naming rights and sponsorship with The Superlative Group.

CLAIMS ROSTER REPORT

FOR COUNCIL MEETING: **February 27, 2023**

Paid and Unpaid Invoices:
Check #'s 345735-345952 **$3,204,737.59**

Paid Electronic Invoices:
Wire #'s 3586-3614 **$4,611,829.03**

Amount for Approval-Council Meeting: February 27, 2023	**$7,816,566.62**

City of Chaska

VENDOR INVOICE LIST

Checks

INVOICE	P.O.	INV DATE	CHECK RUN	CHECK #	INVOICE NET	PAID AMOUNT	DUE DATE	TYPE	STS	INVOICE DESCRIPTION
107858 ABDO EICK AND MEYERS LLP										
466504 CHECK DATE: 02/28/2023		01/31/2023	022823	345777	11,045.55	11,045.55	03/03/2023	INV	PD	JAN FINANCE TEMP-THORS
100028 ACME ELECTRIC MOTOR INC										
10918923 CHECK DATE: 02/28/2023		02/02/2023	022823	345778	702.44	702.44	03/02/2023	INV	PD	HAND TOOLS
10930920 CHECK DATE: 02/28/2023		02/06/2023	022823	345778	112.17	112.17	03/06/2023	INV	PD	FOLDING RULER
10935252 CHECK DATE: 02/28/2023		02/07/2023	022823	345778	47.53	47.53	03/07/2023	INV	PD	CLAW HAMMER
					862.14					
106208 ATHLACTION HOLDINGS LLC										
CB2022NOV_0004 CHECK DATE: 02/07/2023		01/01/2023	020723-2	345735	58.14	58.14	02/28/2023	INV	PD	Membership Chargebacks
102908 ACTIVE911 INC										
468731 CHECK DATE: 02/28/2023		01/30/2023	022823	345779	904.50	904.50	02/28/2023	INV	PD	ANNUAL SUBSCRIPTION-FF
103825 ACUSHNET COMPANY										
300434601 CHECK DATE: 02/28/2023		01/06/2023	022823	345780	-851.00	-851.00	03/31/2023	CRM	PD	RESALE CREDIT
300435077 CHECK DATE: 02/28/2023		01/09/2023	022823	345780	-963.60	-963.60	03/31/2023	CRM	PD	RESALE CREDIT
914894608 CHECK DATE: 02/28/2023		01/30/2023	022823	345780	-1,890.60	-1,890.60	03/31/2023	CRM	PD	BALL PROGAM INCENTIVE
914908489 CHECK DATE: 02/28/2023		02/01/2023	022823	345780	2,810.24	2,810.24	04/02/2023	INV	PD	RESALE
914953181 CHECK DATE: 02/28/2023		02/09/2023	022823	345780	314.37	314.37	04/10/2023	INV	PD	RESALE
914953188 CHECK DATE: 02/28/2023		02/09/2023	022823	345780	235.65	235.65	04/10/2023	INV	PD	RESALE
914982015 CHECK DATE: 02/28/2023		02/14/2023	022823	345780	233.84	233.84	04/15/2023	INV	PD	RESALE

Report generated: 02/24/2023 10:33
User: 8482mrob
Program ID: apinvlst

City of Chaska

VENDOR INVOICE LIST

INVOICE	P.O.	INV DATE	CHECK RUN	CHECK #	INVOICE NET	PAID AMOUNT	DUE DATE	TYPE	STS	INVOICE DESCRIPTION
915009853		02/20/2023	022823	345780	235.20	235.20	03/22/2023	INV	PD	RESALE
CHECK DATE: 02/28/2023										
					124.10					
106669 ADIDAS AMERICA INC										
6158880705		02/04/2023	022823	345781	103.49	103.49	04/05/2023	INV	PD	RESALE
CHECK DATE: 02/28/2023										
6158970576		02/16/2023	022823	345781	314.68	314.68	04/17/2023	INV	PD	RESALE
CHECK DATE: 02/28/2023										
					418.17					
108949 ADVANTAGE COLLECTION PROFESSIONALS LLC										
551930201		01/31/2023	022823	345782	101.69	101.69	03/01/2023	INV	PD	Jan Collection Commiss
CHECK DATE: 02/28/2023										
100843 AH HERMEL CANDY & TOBACCO CO										
962190		02/02/2023	022823	345783	177.00	177.00	03/02/2023	INV	PD	WATER FOR FD
CHECK DATE: 02/28/2023										
110350 ALEX PRO FIREARMS LLC										
21051		02/16/2023	022823	345784	7,039.60	7,039.60	03/18/2023	INV	PD	Department rifles
CHECK DATE: 02/28/2023										
108061 ERNST ENTERPRISES INC										
109737		02/02/2023	022823	345785	28,440.00	28,440.00	03/02/2023	INV	PD	GOLF COURSE BOOSTER SI
CHECK DATE: 02/28/2023										
100073 AMARIL UNIFORM CO										
IV240451		02/01/2023	022823	345786	144.00	144.00	03/01/2023	INV	PD	RUBBER GLOVE LINERS
CHECK DATE: 02/28/2023										
100089 AMERICAN PRESSURE INC										
132256		02/01/2023	022823	345787	446.76	446.76	03/01/2023	INV	PD	Pressure washer hose f
CHECK DATE: 02/28/2023										
132605		02/14/2023	022823	345787	16.67	16.67	03/14/2023	INV	PD	Fittings for Pressure
CHECK DATE: 02/28/2023										

City of Chaska

VENDOR INVOICE LIST

INVOICE	P.O.	INV DATE	CHECK RUN	CHECK #	INVOICE NET	PAID AMOUNT	DUE DATE	TYPE	STS	INVOICE DESCRIPTION
					463.43					
100119 SHAKOPEE VALLEY FORD										
346084-1FOW CHECK DATE: 02/28/2023		02/03/2023	022823	345788	147.84	147.84	03/03/2023	INV	PD	SPARK PLUG BOOTS FOR S
346084FOW CHECK DATE: 02/28/2023		01/31/2023	022823	345788	90.38	90.38	02/28/2023	INV	PD	#1214 TUNE-UP KIT
346567FOW CHECK DATE: 02/28/2023		02/06/2023	022823	345788	193.16	193.16	03/06/2023	INV	PD	TPMS SENSORS FOR 2020
346695FOW CHECK DATE: 02/28/2023		02/08/2023	022823	345788	193.46	193.46	03/08/2023	INV	PD	#906 BRAKE PADS & ROTO
346700FOW CHECK DATE: 02/28/2023		02/08/2023	022823	345788	317.64	317.64	03/08/2023	INV	PD	#906 REAR SUSPENSION P
346744FOW CHECK DATE: 02/28/2023		02/08/2023	022823	345788	33.55	33.55	03/08/2023	INV	PD	#709 LIGHT LENS FOR BL
347296FOW CHECK DATE: 02/28/2023		02/15/2023	022823	345788	477.08	477.08	03/15/2023	INV	PD	#122 FRONT AXLE PARTS
					1,453.11					
100122 ARAMARK REFRESHMENT SERVICES										
5002413 CHECK DATE: 02/28/2023		02/03/2023	022823	345789	139.10	139.10	03/03/2023	INV	PD	COFFEE FOR FD
111124 ARLT, GEORGIANA										
10015656 CHECK DATE: 02/28/2023		02/14/2023	022823	345790	57.65	57.65	03/14/2023	INV	PD	CREDIT BALANCE REFUND-
110886 ARROWHEAD SCIENTIFIC INC										
156212 CHECK DATE: 02/28/2023		02/20/2023	022823	345791	794.80	794.80	03/20/2023	INV	PD	Latent fingerprint kit
100146 ASPEN MILLS INC										
307782 CHECK DATE: 02/28/2023		01/25/2023	022823	345792	239.60	239.60	02/24/2023	INV	PD	DUTY UNIFORM-HELSTROM
309034 CHECK DATE: 02/28/2023		02/15/2023	022823	345792	238.39	238.39	03/17/2023	INV	PD	DUTY UNIFORM-KOCH
309035 CHECK DATE: 02/28/2023		02/15/2023	022823	345792	227.80	227.80	03/17/2023	INV	PD	DUTY UNIFORM-SCHMIDT

VENDOR INVOICE LIST

INVOICE	P.O.	INV DATE	CHECK RUN	CHECK #	INVOICE NET	PAID AMOUNT	DUE DATE	TYPE	STS	INVOICE DESCRIPTION
309036 CHECK DATE: 02/28/2023		02/15/2023	022823	345792	255.68	255.68	03/17/2023	INV	PD	DUTY UNIFORM-GRINAGER
309037 CHECK DATE: 02/28/2023		02/15/2023	022823	345792	139.70	139.70	03/17/2023	INV	PD	DUTY UNIFORM-BONNEMA
309038 CHECK DATE: 02/28/2023		02/15/2023	022823	345792	183.58	183.58	03/17/2023	INV	PD	DUTY UNIFORM-SCHROECKE
309039 CHECK DATE: 02/28/2023		02/15/2023	022823	345792	135.70	135.70	03/17/2023	INV	PD	DUTY UNIFORM-APELT
309040 CHECK DATE: 02/28/2023		02/15/2023	022823	345792	174.72	174.72	03/17/2023	INV	PD	DUTY UNIFORM-ANDERSON
309041 CHECK DATE: 02/28/2023		02/15/2023	022823	345792	266.27	266.27	03/17/2023	INV	PD	DUTY UNIFORM-TREBIATOW
309240 CHECK DATE: 02/28/2023		02/18/2023	022823	345792	35.00	35.00	03/20/2023	INV	PD	LOGO EMBROIDERED-EDIT
					1,896.44					
109815 ASTRY, BRIAN										
109976 CHECK DATE: 02/28/2023		02/05/2023	022823	345793	195.52	195.52	03/13/2023	INV	PD	MILEAGE-FIRE OFFICER S
111153 SALLY J AUGUSTIN										
110141 CHECK DATE: 02/28/2023		02/10/2023	022823	345794	1,800.00	1,800.00	03/10/2023	INV	PD	Event Ctr painting
111151 JUDITH GORDHAMER										
34035 CHECK DATE: 02/28/2023		02/06/2023	022823	345795	99.37	99.37	03/06/2023	INV	PD	Plaque, plate for 2022
107572 BAKER TILLY VIRCHOW KRAUSE LLP										
BTMA17749 CHECK DATE: 02/28/2023		01/05/2023	022823	345796	7,800.00	7,800.00	02/05/2023	INV	PD	2022 DISCLOSURE SERVIC
100172 WC ENTERPRISES INC										
P59700569 CHECK DATE: 02/28/2023		02/08/2023	022823	345797	89.30	89.30	03/08/2023	INV	PD	BATTERIES FOR WTP
P59734554 CHECK DATE: 02/28/2023		02/09/2023	022823	345797	15.99	15.99	03/09/2023	INV	PD	WTP BATTERY

Report generated: 02/24/2023 10:33
User: 8482mrob
Program ID: apinvlst

City of Chaska

VENDOR INVOICE LIST

INVOICE	P.O.	INV DATE	CHECK RUN	CHECK #	INVOICE NET	PAID AMOUNT	DUE DATE	TYPE	STS	INVOICE DESCRIPTION
					105.29					
100174 BAUER BUILT TIRE AND BATTERY										
180289081 CHECK DATE: 02/28/2023		02/06/2023	022823	345798	367.32	367.32	03/15/2023	INV	PD	#906 TIRES
518018956 CHECK DATE: 02/28/2023		02/08/2023	022823	345798	2,269.65	2,269.65	03/15/2023	INV	PD	#114 TIRES
					2,636.97					
100182 BECKER ARENA PRODUCTS INC										
607790 CHECK DATE: 02/28/2023		01/25/2023	022823	345799	23,663.25	23,663.25	02/25/2023	INV	PD	Arena 2 floor 50% of f
105265 BEEBE, DENISE										
109975 CHECK DATE: 02/28/2023		02/09/2023	022823	345800	88.49	88.49	03/13/2023	INV	PD	MILEAGE-MCFOA MTG & CA
100188 BERRY COFFEE COMPANY										
940475 CHECK DATE: 02/28/2023		02/08/2023	022823	345801	67.30	67.30	03/08/2023	INV	PD	CCC coffee
940544 CHECK DATE: 02/28/2023		02/08/2023	022823	345801	169.20	169.20	03/08/2023	INV	PD	Lodge coffee
					236.50					
100198 UTILITY TOOL REPAIR LLC										
3806 CHECK DATE: 02/28/2023		01/31/2023	022823	345802	735.00	735.00	03/03/2023	INV	PD	HARNESS & LANYARD FOR
3807 CHECK DATE: 02/28/2023		02/01/2023	022823	345802	3,122.06	3,122.06	03/01/2023	INV	PD	CLIMBING BELT & HOOKS
					3,857.06					
100201 BCBSM INC										
230207197565 CHECK DATE: 02/16/2023		02/07/2023	021623	345755	187,390.72	187,390.72	02/20/2023	INV	PD	MAR EMP INS PREM-MEDIC
102279 BOLTON & MENK INC										
0307141 CHECK DATE: 02/28/2023		02/20/2023	022823	345803	2,897.00	2,897.00	03/21/2023	INV	PD	2023/24 FUNDING-SRTS G

VENDOR INVOICE LIST

INVOICE	P.O.	INV DATE	CHECK RUN	CHECK #	INVOICE NET	PAID AMOUNT	DUE DATE	TYPE	STS	INVOICE DESCRIPTION
0307142 CHECK DATE: 02/28/2023		02/20/2023	022823	345803	70,187.25	70,187.25	03/21/2023	INV	PD	TH 41 & CSAH 61 IMPROV
					73,084.25					
100214 BORDER STATES INDUSTRIES INC										
925721045 CHECK DATE: 02/28/2023		02/01/2023	022823	345804	781.28	781.28	03/25/2023	INV	PD	PUTTY TAPE
925721061 CHECK DATE: 02/28/2023		02/01/2023	022823	345804	50.60	50.60	03/25/2023	INV	PD	COVERS FOR H-TAP
925759278 CHECK DATE: 02/28/2023	230019	02/08/2023	022823	345804	164.36	164.36	03/25/2023	INV	PD	7 = CONNECT TRANS 6 5/
925767177 CHECK DATE: 02/28/2023	230020	02/09/2023	022823	345804	662.60	662.60	03/25/2023	INV	PD	25 = HOT LINE CLMP STI
925783225 CHECK DATE: 02/28/2023	230021	02/13/2023	022823	345804	808.90	808.90	03/25/2023	INV	PD	20 = ELBOW LOAD BRK 1/
					2,467.74					
100225 BRADY, EMERSON										
110036 CHECK DATE: 02/16/2023		02/13/2023	021623	345756	100.00	100.00	02/27/2023	INV	PD	Employment Release- No
100226 BRAUN INTERTEC CORPORATION										
B329268 CHECK DATE: 02/28/2023		02/08/2023	022823	345805	4,162.50	4,162.50	03/08/2023	INV	PD	CREEK RD UTILITY, STRE
100254 BRYAN ROCK PRODUCTS INC										
57446 CHECK DATE: 02/28/2023		01/31/2023	022823	345806	609.91	609.91	02/28/2023	INV	PD	WATER STOCKPILE/CHIPS
100293 CARGILL INC										
2907929387 CHECK DATE: 02/28/2023		01/30/2023	022823	345807	12,249.07	12,249.07	03/01/2023	INV	PD	CLEARLANE DEICER
111113 CARLSON, SARAH										
109751 CHECK DATE: 02/28/2023		01/10/2023	022823	345808	38.94	38.94	03/02/2023	INV	PD	MLK BREAKFAST SUPPLIES

VENDOR INVOICE LIST

INVOICE	P.O.	INV DATE	CHECK RUN	CHECK #	INVOICE NET	PAID AMOUNT	DUE DATE	TYPE	STS	INVOICE DESCRIPTION
100301 CARVER COUNTY										
30.0501100-2022-2 CHECK DATE: 02/16/2023		02/01/2023	021623	345757	1,155.61	1,155.61	02/28/2023	INV	PD	PROP TAX-423 WALNUT ST
100317 CARVER COUNTY ENVIRONMENTAL SERVICES DEPT										
13153 CHECK DATE: 02/28/2023		02/11/2023	022823	345809	125.00	125.00	03/11/2023	INV	PD	CARVER COUNTY HAZARDOU
100314 CARVER COUNTY IS/GIS DEPT										
CSER-1425 CHECK DATE: 02/28/2023		12/31/2022	022823	345810	4,052.87	4,052.87	01/30/2023	INV	PD	GIS SHARED POSITION -
107854 CASTLE, ANDREW										
109973 CHECK DATE: 02/28/2023		01/29/2023	022823	345811	63.47	63.47	03/13/2023	INV	PD	UBER FROM MSP TO TC
100323 CDW GOVERNMENT INC										
GC84395 CHECK DATE: 02/28/2023		01/12/2023	022823	345812	147.62	147.62	02/11/2023	INV	PD	COMPUTER REPLACEMENT P
GD32680 CHECK DATE: 02/28/2023		01/13/2023	022823	345812	346.80	346.80	02/12/2023	INV	PD	KEYBOARD COMBOS FOR IT
GD42712 CHECK DATE: 02/28/2023		01/13/2023	022823	345812	82.11	82.11	02/12/2023	INV	PD	SURFACE TYPE COVER IT
GF10686 CHECK DATE: 02/28/2023		01/16/2023	022823	345812	-142.14	-142.14	02/28/2023	CRM	PD	HONEYWELL SCANNERS REF
GF74506 CHECK DATE: 02/28/2023		01/18/2023	022823	345812	322.20	322.20	02/17/2023	INV	PD	COMPUTER REPLACEMENT P
GF94527 CHECK DATE: 02/28/2023		01/18/2023	022823	345812	12,634.70	12,634.70	02/17/2023	INV	PD	COMPUTER REPLACEMENT P
GG84403 CHECK DATE: 02/28/2023		01/19/2023	022823	345812	-32.22	-32.22	02/28/2023	CRM	PD	REFUND TO COMPUTER REP
GJ77680 CHECK DATE: 02/28/2023		01/25/2023	022823	345812	32.22	32.22	02/24/2023	INV	PD	COMPUTER REPLACEMENT P
GL26908 CHECK DATE: 02/28/2023		01/27/2023	022823	345812	1,467.03	1,467.03	02/26/2023	INV	PD	COMPUTER REPLACEMENT P
GL32835 CHECK DATE: 02/28/2023		01/27/2023	022823	345812	-107.03	-107.03	02/28/2023	CRM	PD	REFUND-COMPUTER REPLAC

VENDOR INVOICE LIST

INVOICE	P.O.	INV DATE	CHECK RUN	CHECK #	INVOICE NET	PAID AMOUNT	DUE DATE	TYPE	STS	INVOICE DESCRIPTION
GL40035 CHECK DATE: 02/28/2023		01/27/2023	022823	345812	703.08	703.08	02/26/2023	INV	PD	COMPUTER REPLACMENT PR
GL46704 CHECK DATE: 02/28/2023		01/28/2023	022823	345812	4.23	4.23	02/27/2023	INV	PD	AUDIO CABLE FOR IT
GL87199 CHECK DATE: 02/28/2023		01/30/2023	022823	345812	74.89	74.89	03/01/2023	INV	PD	CASE FOR MSB SHOP TABL
GM51557 CHECK DATE: 02/28/2023		01/31/2023	022823	345812	217.25	217.25	03/02/2023	INV	PD	HEADSET FOR HR
GM55705 CHECK DATE: 02/28/2023		01/31/2023	022823	345812	1,577.83	1,577.83	03/02/2023	INV	PD	COMPUTER REPLACEMENT P
GM77436 CHECK DATE: 02/28/2023		02/01/2023	022823	345812	12,634.70	12,634.70	03/03/2023	INV	PD	COMPUTER REPLACEMENT P
GN70189 CHECK DATE: 02/28/2023		02/02/2023	022823	345812	-108.87	-108.87	03/31/2023	CRM	PD	REFUND-COMPUTER REPLAC
GP03754 CHECK DATE: 02/28/2023		02/03/2023	022823	345812	4,269.30	4,269.30	03/05/2023	INV	PD	COMPUTER REPLACEMENT P
GP69763 CHECK DATE: 02/28/2023		02/06/2023	022823	345812	399.45	399.45	03/08/2023	INV	PD	SCANNERS FOR CCC POS M
GQ82834 CHECK DATE: 02/28/2023		02/08/2023	022823	345812	1,873.59	1,873.59	03/10/2023	INV	PD	COMPUTER FOR COMMUNICA
					36,396.74					
100332 CENTERPOINT ENERGY RESOURCES CORP										
105010300/JAN23 CHECK DATE: 02/16/2023		02/03/2023	021623	345758	9,564.13	9,564.13	03/03/2023	INV	PD	JAN 3210 CHASKA BLVD G
109045922/JAN23 CHECK DATE: 02/21/2023		02/06/2023	022123	345769	20,195.19	20,195.19	03/06/2023	INV	PD	JAN 1661 PARK RIDGE DR
109052076/JAN23 CHECK DATE: 02/21/2023		02/06/2023	022123	345769	11,183.02	11,183.02	03/06/2023	INV	PD	JAN 1611 PARK RIDGE DR
64030791582/JAN23 CHECK DATE: 02/16/2023		02/03/2023	021623	345758	161.39	161.39	03/03/2023	INV	PD	JAN 216 W 4TH ST GAS S
64030828871/JAN23 CHECK DATE: 02/16/2023		02/03/2023	021623	345758	214.28	214.28	03/03/2023	INV	PD	JAN 423 N WALNUT ST GA
80000146268/JAN23 CHECK DATE: 02/24/2023		02/13/2023	022423	345773	13,133.04	13,133.04	03/10/2023	INV	PD	JAN GAS SVC
80000167793/JAN23 CHECK DATE: 02/24/2023		02/13/2023	022423	345773	55.35	55.35	03/10/2023	INV	PD	JAN CITY PKS GAS SVC

City of Chaska

VENDOR INVOICE LIST

INVOICE	P.O.	INV DATE	CHECK RUN	CHECK #	INVOICE NET	PAID AMOUNT	DUE DATE	TYPE	STS	INVOICE DESCRIPTION
80000167843/JAN23 CHECK DATE: 02/24/2023		02/13/2023	022423	345773	8,390.80	8,390.80	03/10/2023	INV	PD	JAN GAS SVC
					62,897.20					
107679 MINNESOTA STATE COLLEGES AND UNIVERSITIES										
00765458 CHECK DATE: 02/28/2023		01/13/2023	022823	345813	495.00	495.00	02/13/2023	INV	PD	FD TRAINING-SOLAR POWE
100337 QWEST CORPORATION										
313196254/FEB23 CHECK DATE: 02/24/2023		02/18/2023	022423	345774	281.15	281.15	03/16/2023	INV	PD	FEB CITY HALL LOC PHN
313249294/FEB23 CHECK DATE: 02/21/2023		02/11/2023	022123	345770	55.61	55.61	03/09/2023	INV	PD	FEB TC MAINT LOC PHN S
313408124/FEB23 CHECK DATE: 02/21/2023		02/11/2023	022123	345770	68.32	68.32	03/09/2023	INV	PD	FEB TC MAINT LOC PHN S
313773369/FEB23 CHECK DATE: 02/16/2023		02/01/2023	021623	345759	107.67	107.67	02/27/2023	INV	PD	FEB CCC BURGLAR ALARM
628083992 CHECK DATE: 02/16/2023		02/01/2023	021623	345760	356.24	356.24	03/03/2023	INV	PD	FEB SIP PHONE BILL
628086573-2022 CHECK DATE: 02/16/2023		02/01/2023	021623	345760	2,221.21	2,221.21	03/03/2023	INV	PD	OCT-DEC INTERNET SERVI
628086573-2023 CHECK DATE: 02/16/2023		02/01/2023	021623	345760	1,700.20	1,700.20	03/03/2023	INV	PD	JAN-FEB INTERNET SERVI
70655196 CHECK DATE: 02/09/2023		06/13/2022	020923	345741	10,560.55	10,560.55	03/02/2023	INV	PD	3-YR ENTERPRISE LICENS
738016 CHECK DATE: 02/09/2023		01/12/2023	020923	345741	87.40	87.40	02/11/2023	INV	PD	LATE FEE-INV 70655196
90047401 CHECK DATE: 02/09/2023		05/19/2022	020923	345741	-2,806.95	-2,806.95	03/02/2023	CRM	PD	PRICE ADJ & TAX CREDIT
90047470 CHECK DATE: 02/09/2023		06/06/2022	020923	345741	-1,926.58	-1,926.58	03/02/2023	CRM	PD	TAX CREDIT ON INV 7064
					10,704.82					
107927 CHASKA AREA COMPETITIVE JR CURLING CLUB										
2022 CHECK DATE: 02/28/2023		02/13/2023	022823	345814	65.00	65.00	03/14/2023	INV	PD	Remit member donations

City of Chaska

VENDOR INVOICE LIST

INVOICE	P.O.	INV DATE	CHECK RUN	CHECK #	INVOICE NET	PAID AMOUNT	DUE DATE	TYPE	STS	INVOICE DESCRIPTION
111152 CHILDREN OF TOMORROW										
2012727.002		02/17/2023	022823	345815	510.00	510.00	03/17/2023	INV	PD	RFD RENTAL FEE
CHECK DATE: 02/28/2023						PAYEE: CHILDREN OF TOMORROW				
111123 CHRISTIANSEN, HEIDI										
10011403		02/14/2023	022823	345816	153.42	153.42	03/14/2023	INV	PD	CREDIT BALANCE REFUND-
CHECK DATE: 02/28/2023										
110240 CINTAS CORPORATION NO 2										
5144985963		02/10/2023	022823	345817	44.69	44.69	03/10/2023	INV	PD	First Aide Supplies-PD
CHECK DATE: 02/28/2023										
9202574885		12/01/2022	022823	345818	565.00	565.00	12/31/2022	INV	PD	AED Maintenance CCC+IN
CHECK DATE: 02/28/2023										
					609.69					
100404 CITY OF EDEN PRAIRIE										
4356		01/31/2023	022823	345819	5,571.00	5,571.00	02/14/2023	INV	PD	Annual Fencing Consort
CHECK DATE: 02/28/2023										
4403		01/01/2023	022823	345819	2,000.00	2,000.00	03/03/2023	INV	PD	2023 WAFTA Dues-Region
CHECK DATE: 02/28/2023										
					7,571.00					
109942 MANSFIELD TOP SERVICES INC										
32009014632		02/01/2023	022823	345820	3,491.25	3,491.25	03/03/2023	INV	PD	Feb Curl/Event Cleanin
CHECK DATE: 02/28/2023										
42009006664		01/30/2023	022823	345820	157.50	157.50	03/01/2023	INV	PD	Jan Event Ctr Labor
CHECK DATE: 02/28/2023										
					3,648.75					
100418 CLEARSOFT INC										
160-333		02/01/2023	020923	345742	75.00	75.00	02/20/2023	INV	PD	FEB FD WATER SOFTENER
CHECK DATE: 02/09/2023										
100419 CLOVER CONDOMINIUM ASSOCIATION										
498838-15	230005	02/15/2023	021623	345761	419.95	419.95	02/28/2023	INV	PD	MAR COMMUNITY ROOM DUE
CHECK DATE: 02/16/2023										
110722 COASTWISE FIREGUARD INC										

City of Chaska

VENDOR INVOICE LIST

INVOICE	P.O.	INV DATE	CHECK RUN	CHECK #	INVOICE NET	PAID AMOUNT	DUE DATE	TYPE	STS	INVOICE DESCRIPTION
908		01/20/2023	022823	345821	1,769.49	1,769.49	03/06/2023	INV	PD	PLAN REVIEW FEE-EQUEST
CHECK DATE: 02/28/2023										
100428 COBRA GOLF INC										
DC206681		01/06/2023	022823	345822	-832.20	-832.20	03/31/2023	CRM	PD	RESALE CREDIT
CHECK DATE: 02/28/2023										
DC207098		01/11/2023	022823	345822	-2,727.00	-2,727.00	03/31/2023	CRM	PD	RESALE CREDIT
CHECK DATE: 02/28/2023										
G3171078		02/17/2023	022823	345822	4,335.00	4,335.00	03/27/2023	INV	PD	RESALE
CHECK DATE: 02/28/2023										
					775.80					
100768 CODE 4 SERVICES INC										
7698		10/20/2022	022823	345823	6,488.96	6,488.96	11/19/2022	INV	PD	Squad 1226 Upfitting+I
CHECK DATE: 02/28/2023										
7961		01/18/2023	022823	345823	2,024.66	2,024.66	02/18/2023	INV	PD	3yr NetCloud Enterpris
CHECK DATE: 02/28/2023										
8007		02/13/2023	022823	345823	636.81	636.81	03/15/2023	INV	PD	Squad 1191 - Transport
CHECK DATE: 02/28/2023										
8030		02/09/2023	022823	345823	6,052.95	6,052.95	03/11/2023	INV	PD	Squad 1227 - Upfitting
CHECK DATE: 02/28/2023										
8048		02/15/2023	022823	345823	607.45	607.45	03/17/2023	INV	PD	PRINTER MOUNT FOR PD
CHECK DATE: 02/28/2023										
8069		02/21/2023	022823	345823	5,739.51	5,739.51	03/23/2023	INV	PD	Squad 1228 - Labor and
CHECK DATE: 02/28/2023										
8072		02/21/2023	022823	345823	928.73	928.73	03/23/2023	INV	PD	Squad 1181 - Tear down
CHECK DATE: 02/28/2023										
					22,479.07					
100436 COMCAST CORPORATION										
0036243/FEB23-TC		02/07/2023	022123	345771	248.82	248.82	03/04/2023	INV	PD	FEB CLUBHOUSE CABLE
CHECK DATE: 02/21/2023										
0055482/FEB23-FD		02/12/2023	022123	345771	6.75	6.75	03/09/2023	INV	PD	FEB FD CABLE
CHECK DATE: 02/21/2023										
110147		02/09/2023	022423	345775	79.74	79.74	03/06/2023	INV	PD	Feb PD Cable
CHECK DATE: 02/24/2023										

City of Chaska

VENDOR INVOICE LIST

INVOICE	P.O.	INV DATE	CHECK RUN	CHECK #	INVOICE NET	PAID AMOUNT	DUE DATE	TYPE	STS	INVOICE DESCRIPTION
					335.31					
109579 COMPASS MINERALS AMERICA INC										
1121618		01/23/2023	022823	345824	9,625.62	9,625.62	02/23/2023	INV	PD	ROAD SALT
CHECK DATE: 02/28/2023										
1128183		01/31/2023	022823	345824	2,130.60	2,130.60	02/28/2023	INV	PD	ROAD SALT
CHECK DATE: 02/28/2023										
1131903		02/04/2023	022823	345824	6,667.82	6,667.82	03/04/2023	INV	PD	ROAD SALT
CHECK DATE: 02/28/2023										
					18,424.04					
105466 COMPUTER INTEGRATION TECHNOLOGIES INC										
344117		02/15/2023	022823	345825	3,994.40	3,994.40	03/17/2023	INV	PD	FEB OFFICE 365 AGREEME
CHECK DATE: 02/28/2023										
107399 OCCUPATIONAL HEALTH CENTERS OF MN PC										
103710897		01/23/2023	020723-2	345736	67.00	67.00	02/25/2023	INV	PD	PHYSICAL
CHECK DATE: 02/07/2023										
107686 CONCENTRA HEALTH SERVICES INC										
16277434		01/20/2023	022823	345826	68.00	68.00	03/01/2023	INV	PD	DRUG TESTING, PRE-EMPL
CHECK DATE: 02/28/2023										
109309 COPPERWOOD MANAGEMEN										
264400002-2023-1		02/06/2023	022823	345827	820.00	820.00	03/06/2023	INV	PD	JAN REBATE-BUSINESS LI
CHECK DATE: 02/28/2023						PAYEE: COPPERWOOD MANAGEMENT				
100479 CULLIGAN-METRO BROOKLYN PARK										
114-01594506-5 JAN23		01/31/2023	021623	345762	15.77	15.77	02/18/2023	INV	PD	COOLER RENT-TC MAINT
CHECK DATE: 02/16/2023										
110391 CUMMINS INC										
E4-67284		02/10/2023	022823	345828	1,634.42	1,634.42	03/10/2023	INV	PD	#130 SNOW BLOWER
CHECK DATE: 02/28/2023										
110412 IMPERIAL BAG AND PAPER CO LLC										
4040153		01/31/2023	022823	345829	253.52	253.52	02/28/2023	INV	PD	Service on KaiVac Mach
CHECK DATE: 02/28/2023										

City of Chaska

VENDOR INVOICE LIST

INVOICE	P.O.	INV DATE	CHECK RUN	CHECK #	INVOICE NET	PAID AMOUNT	DUE DATE	TYPE	STS	INVOICE DESCRIPTION
100570 DYNAMIC BRANDS LLC										
INV1613114		02/08/2023	022823	345830	441.99	441.99	03/10/2023	INV	PD	PULL CART PARTS
CHECK DATE: 02/28/2023										
110104 RALNY FALLS VENTURES LLC										
541		01/30/2023	022823	345831	596.00	596.00	02/28/2023	INV	PD	FF GEAR DECON
CHECK DATE: 02/28/2023										
104594 ESP INC										
012642		11/28/2022	022823	345832	660.00	660.00	03/10/2023	INV	PD	2023 Curl/Event Ctr Fi
CHECK DATE: 02/28/2023										
100625 EUREKA CONSTRUCTION INC										
53290150-6		02/07/2023	022823	345833	1,326,205.22	1,326,205.22	03/07/2023	INV	PD	CREEK RD UTILITY & ST
CHECK DATE: 02/28/2023										
100649 FEDERAL EXPRESS CORPORATION										
8-018-57165		01/25/2023	020723-2	345737	35.85	35.85	02/09/2023	INV	PD	UB SHIPPING FROM US BA
CHECK DATE: 02/07/2023										
8-032-34043		02/08/2023	021423	345749	36.68	36.68	02/23/2023	INV	PD	UB SHIPPING FROM US BA
CHECK DATE: 02/14/2023										
					72.53					
110169 FELHABER LARSON FENLON AND VOGT PA										
698588		02/03/2023	022823	345834	17,342.00	17,342.00	03/03/2023	INV	PD	TH 41 PROJECT-PROPERTY
CHECK DATE: 02/28/2023										
100653 FERGUSON ENTERPRISES INC										
0230251		02/06/2023	022823	345835	253.91	253.91	03/06/2023	INV	PD	EMERGENCY EYEWASH
CHECK DATE: 02/28/2023										
100673 FLEETPRIDE INC										
105365131		01/31/2023	022823	345836	1,158.96	1,158.96	02/28/2023	INV	PD	#312 AIR BRAKE CHAMBER
CHECK DATE: 02/28/2023										
106634 GALLUS GOLF LLC										

VENDOR INVOICE LIST

INVOICE	P.O.	INV DATE	CHECK RUN	CHECK #	INVOICE NET	PAID AMOUNT	DUE DATE	TYPE	STS	INVOICE DESCRIPTION
11645		02/01/2023	022823	345837	2,500.00	2,500.00	03/03/2023	INV	PD	MOBILE APP ANNUAL LICE
CHECK DATE: 02/28/2023										
111114 GAREIS, CHRIS										
109760		01/20/2023	022823	345838	50.00	50.00	03/03/2023	INV	PD	CLASS REGISTRATION-FIG
CHECK DATE: 02/28/2023										
110270 GARTNER REFRIGERATION INC										
12449171		02/03/2023	022823	345839	2,780.00	2,780.00	03/03/2023	INV	PD	Compressor #1 seal cha
CHECK DATE: 02/28/2023										
100707 GEAR FOR SPORTS										
41983635		02/09/2023	022823	345840	432.93	432.93	03/09/2023	INV	PD	Curl Resale-UA Tees
CHECK DATE: 02/28/2023										
41984222		02/13/2023	022823	345840	664.58	664.58	03/13/2023	INV	PD	Curl Resale-UA Hoodies
CHECK DATE: 02/28/2023										
					1,097.51					
100729 GILBERT MECHANICAL CONTRACTORS INC										
227523		02/08/2023	022823	345841	776.00	776.00	03/08/2023	INV	PD	QTRLY HVAC SVC
CHECK DATE: 02/28/2023										
100737 GMH ASPHALT CORPORATION										
52492200-9/FINAL		01/18/2023	022823	345842	174,650.94	174,650.94	03/02/2023	INV	PD	2021 DT RECONSTRUCTION
CHECK DATE: 02/28/2023										
106901 INFLECTION.COM INC										
CIT02939056		01/31/2023	022823	345843	245.00	245.00	03/02/2023	INV	PD	JAN BACKGROUND CHECKS
CHECK DATE: 02/28/2023										
101463 GOPHER STATE ONE CALL										
3010284		01/31/2023	022823	345844	136.35	136.35	02/28/2023	INV	PD	JANUARY LOCATES
CHECK DATE: 02/28/2023										
100759 WW GRAINGER INC										
9583055745		01/23/2023	022823	345845	576.02	576.02	02/22/2023	INV	PD	Solenoid Valve for the
CHECK DATE: 02/28/2023										

City of Chaska

VENDOR INVOICE LIST

INVOICE	P.O.	INV DATE	CHECK RUN	CHECK #	INVOICE NET	PAID AMOUNT	DUE DATE	TYPE	STS	INVOICE DESCRIPTION
9583055752		01/23/2023	022823	345845	46.11	46.11	02/22/2023	INV	PD	PULLEY FOR WINDOW WASH
CHECK DATE: 02/28/2023										
					622.13					
100810 HAWKINS INC										
6402010		02/15/2023	022823	345846	20.00	20.00	04/01/2023	INV	PD	DEMURRAGE
CHECK DATE: 02/28/2023										
6404380		02/14/2023	022823	345846	8,669.02	8,669.02	03/31/2023	INV	PD	WTP CHEMICALS
CHECK DATE: 02/28/2023										
					8,689.02					
100821 HEALTHPARTNERS INC										
118958321		02/08/2023	021623	345763	7,571.53	7,571.53	02/28/2023	INV	PD	MAR EMP INS PREM-DENTA
CHECK DATE: 02/16/2023										
100834 HENNEPIN COUNTY FIRE CHIEFS ASSOC										
110078		02/14/2023	022823	345847	20.00	20.00	03/14/2023	INV	PD	2023 CHIEFS DUES
CHECK DATE: 02/28/2023										
111125 HENSLEY, JAMES										
35732		02/14/2023	022823	345848	319.22	319.22	03/14/2023	INV	PD	CREDIT BALANCE REFUND-
CHECK DATE: 02/28/2023										
100848 HIGH TECH CLEANING INC										
18446		02/01/2023	022823	345849	3,294.00	3,294.00	03/01/2023	INV	PD	CITY HALL CLEANING
CHECK DATE: 02/28/2023										
18447		02/01/2023	022823	345849	520.00	520.00	03/01/2023	INV	PD	COMMUNITY ROOM - CLOVE
CHECK DATE: 02/28/2023										
18448		02/01/2023	022823	345849	1,593.00	1,593.00	03/01/2023	INV	PD	FIRE STATION CLEANING
CHECK DATE: 02/28/2023										
18449		02/01/2023	022823	345849	1,215.00	1,215.00	03/01/2023	INV	PD	HISTORY CENTER CLEANIN
CHECK DATE: 02/28/2023										
18450		02/01/2023	022823	345849	215.00	215.00	03/01/2023	INV	PD	IT DEPARTMENT
CHECK DATE: 02/28/2023										
18451		02/01/2023	022823	345849	2,100.00	2,100.00	03/01/2023	INV	PD	MSB CLEANING
CHECK DATE: 02/28/2023										
18452		02/01/2023	022823	345849	185.00	185.00	03/01/2023	INV	PD	STANTEC BUILDING

City of Chaska

VENDOR INVOICE LIST

INVOICE	P.O.	INV DATE	CHECK RUN	CHECK #	INVOICE NET	PAID AMOUNT	DUE DATE	TYPE	STS	INVOICE DESCRIPTION
CHECK DATE: 02/28/2023										
18453		02/01/2023	022823	345849	665.00	665.00	03/01/2023	INV	PD	WTP
CHECK DATE: 02/28/2023										
18516		02/13/2023	022823	345849	688.96	688.96	03/13/2023	INV	PD	FIRE STATION CLEANING
CHECK DATE: 02/28/2023										
18517		02/13/2023	022823	345849	734.51	734.51	03/13/2023	INV	PD	CITY HALL CLEANING SUP
CHECK DATE: 02/28/2023										
					11,210.47					
100859 HOISINGTON KOEGLER GROUP INC										
017-038-34		02/12/2023	022823	345850	530.00	530.00	03/12/2023	INV	PD	CITY SQUARE WEST-JAN
CHECK DATE: 02/28/2023										
022-024-8		02/12/2023	022823	345850	2,682.50	2,682.50	03/12/2023	INV	PD	DT BUSINESS ENTRANCE D
CHECK DATE: 02/28/2023										
022-043-6		02/12/2023	022823	345850	1,572.50	1,572.50	03/12/2023	INV	PD	ZONING CODE AUDIT 2022
CHECK DATE: 02/28/2023										
022-046-5		02/12/2023	022823	345850	4,071.25	4,071.25	03/12/2023	INV	PD	CITY SQUARE PARK RENO-
CHECK DATE: 02/28/2023										
					8,856.25					
106151 HOLT TOUR AND CHARTER INC										
49021		02/16/2023	022823	345851	750.00	750.00	03/16/2023	INV	PD	Transportation-Vikings
CHECK DATE: 02/28/2023										
100878 HUEBSCH										
84176/JAN2023		01/31/2023	020723-2	345738	1,166.71	1,166.71	02/10/2023	INV	PD	JAN RUG/MAT SVC
CHECK DATE: 02/07/2023										
100879 PRAIRIE TECHNOLOGIES INC OF MN										
230040		01/20/2023	022823	345852	928.80	928.80	02/20/2023	INV	PD	Svc on CCC Building Au
CHECK DATE: 02/28/2023										
230131		01/31/2023	022823	345852	3,446.15	3,446.15	02/28/2023	INV	PD	CCC Automation Annual
CHECK DATE: 02/28/2023										
					4,374.95					
100889 INTERNATIONAL CITY MGMT ASSN RETIREMENT CORP										
2023/0210-ICMA		02/10/2023	021423	345750	5,574.09	5,574.09	02/10/2023	INV	PD	021023 Payroll - 457 &
CHECK DATE: 02/14/2023										

Report generated: 02/24/2023 10:33
User: 8482mrob
Program ID: apinvlst

VENDOR INVOICE LIST

INVOICE	P.O.	INV DATE	CHECK RUN	CHECK #	INVOICE NET	PAID AMOUNT	DUE DATE	TYPE	STS	INVOICE DESCRIPTION
104751 IMPACT MAILING OF MINNESOTA INC										
204140		01/31/2023	022823	345853	8,380.12	8,380.12	03/01/2023	INV	PD	Jan Bills
CHECK DATE: 02/28/2023										
204147		01/31/2023	022823	345853	1,216.09	1,216.09	03/01/2023	INV	PD	Jan Reminders
CHECK DATE: 02/28/2023										
204149		01/31/2023	022823	345853	566.48	566.48	03/01/2023	INV	PD	Jan Final BIlls
CHECK DATE: 02/28/2023										
204666		02/09/2023	022823	345853	613.74	613.74	03/01/2023	INV	PD	Feb Disconnects
CHECK DATE: 02/28/2023										
					10,776.43					
100901 INDEPENDENT SCHOOL DISTRICT 112										
2012702.002		02/13/2023	022823	345854	255.00	255.00	03/13/2023	INV	PD	RFD RENTAL FEE FOR CCC
CHECK DATE: 02/28/2023										
2012703.002		02/13/2023	022823	345854	255.00	255.00	03/13/2023	INV	PD	RFD RENTAL FEE FOR CCC
CHECK DATE: 02/28/2023										
					510.00					
110528 INVOICE CLOUD INC										
3052-2023_1		01/31/2023	022823	345855	10,556.99	10,556.99	03/01/2023	INV	PD	Jan UB Payment Process
CHECK DATE: 02/28/2023										
107970 PATRICK HAWKINS										
11204		01/31/2023	022823	345856	8,019.60	8,019.60	03/02/2023	INV	PD	#112 EDGES
CHECK DATE: 02/28/2023										
102031 TYCO FIRE & SECURITY (US) MANAGEMENT INC										
23373970		02/03/2023	022823	345857	272.69	272.69	03/03/2023	INV	PD	WTP SPRINKLER TEST & I
CHECK DATE: 02/28/2023										
23374764		02/06/2023	022823	345857	596.89	596.89	03/06/2023	INV	PD	WTP FIRE ALARM TEST &
CHECK DATE: 02/28/2023										
89493448		01/25/2023	022823	345857	113.52	113.52	02/25/2023	INV	PD	FIRE SYS SVC-TC MAINT
CHECK DATE: 02/28/2023										
					983.10					
106300 KIBBLE EQUIPMENT LLC										

VENDOR INVOICE LIST

INVOICE	P.O.	INV DATE	CHECK RUN	CHECK #	INVOICE NET	PAID AMOUNT	DUE DATE	TYPE	STS	INVOICE DESCRIPTION
647607		02/13/2023	022823	345858	16,556.90	16,556.90	03/13/2023	INV	PD	#228 TRACTOR REPAIR
CHECK DATE: 02/28/2023										
107153 ARK SPORTS INC										
6393		02/10/2023	022823	345859	150.00	150.00	03/10/2023	INV	PD	Vector design of exist
CHECK DATE: 02/28/2023										
100999 KLEBER, MIKE										
109977		02/03/2023	022823	345860	84.86	84.86	03/13/2023	INV	PD	MILEAGE & PKG FOR BOLA
CHECK DATE: 02/28/2023										
102881 LANO EQUIPMENT INC										
03-974282		02/08/2023	022823	345861	122.46	122.46	03/08/2023	INV	PD	CHAINSAW PARTS - TREE
CHECK DATE: 02/28/2023										
101050 LAW ENFORCEMENT LABOR SERVICES INC										
Feb-2023		02/10/2023	021423	345751	1,755.00	1,755.00	02/10/2023	INV	PD	Feb-23 Police Union Du
CHECK DATE: 02/14/2023										
101057 LEAGUE OF MINNESOTA CITIES										
LMC WC 000000467227		01/09/2023	021623	345764	477.48	477.48	02/28/2023	INV	PD	WORKERS COMP PENALTY A
CHECK DATE: 02/16/2023										
101058 LEAGUE OF MINNESOTA CITIES										
376162		01/31/2023	022823	345862	125.00	125.00	02/28/2023	INV	PD	IPMA-HR MN DUES/CONF-D
CHECK DATE: 02/28/2023										
110118 LOCKRIDGE GRINDAL NAUEN PLLP										
19958		02/01/2023	022823	345863	3,333.33	3,333.33	03/15/2023	INV	PD	FEB LOBBYIST FOR CITY
CHECK DATE: 02/28/2023										
103842 LOCAL GOVERNMENT INFORMATION SYSTEMS										
53151		01/01/2023	022823	345864	836.00	836.00	03/14/2023	INV	PD	JAN SA SUPPORT
CHECK DATE: 02/28/2023										
111129 LOPEZ, MICHAEL										
37314		02/14/2023	022823	345865	61.42	61.42	03/14/2023	INV	PD	METER DEPOSIT REFUND-3

City of Chaska

VENDOR INVOICE LIST

INVOICE	P.O.	INV DATE	CHECK RUN	CHECK #	INVOICE NET	PAID AMOUNT	DUE DATE	TYPE	STS	INVOICE DESCRIPTION
CHECK DATE: 02/28/2023										
105139 LUBE TECH AND PARTNERS LLC										
3127384		02/02/2023	022823	345866	153.58	153.58	03/04/2023	INV	PD	GREASE FOR GREASING EQ
CHECK DATE: 02/28/2023										
3128640		02/03/2023	022823	345866	912.62	912.62	03/05/2023	INV	PD	ENGINE OIL FOR EQUIPME
CHECK DATE: 02/28/2023										
3135267		02/13/2023	022823	345866	1,145.16	1,145.16	03/15/2023	INV	PD	BULK MOTOR OIL
CHECK DATE: 02/28/2023										
					2,211.36					
111096 MACKENTHUN, MARION										
10009194		01/17/2023	020923	345743	191.47	191.47	02/17/2023	INV	PD	CREDIT BALANCE REFUND-
CHECK DATE: 02/09/2023										
105710 MACQUEEN EMERGENCY GROUP										
P08569		02/15/2023	022823	345867	970.36	970.36	03/15/2023	INV	PD	E11 REPLACEMENT LIGHTS
CHECK DATE: 02/28/2023										
111122 MADER, DEBRA A										
10008982		02/14/2023	022823	345868	19.04	19.04	03/14/2023	INV	PD	CREDIT BALANCE REFUND-
CHECK DATE: 02/28/2023										
110252 MAGNACHARGE BATTERY (USA) INC										
72IA303239		02/10/2023	022823	345869	3,411.02	3,411.02	03/12/2023	INV	PD	BATTERIES FOR GTX CART
CHECK DATE: 02/28/2023										
103176 MANSFIELD OIL COMPANY										
23898709		01/05/2023	022823	345870	3,914.58	3,914.58	02/04/2023	INV	PD	COLD PRO FOR DIESEL
CHECK DATE: 02/28/2023										
23898710		01/05/2023	022823	345870	7,214.50	7,214.50	02/04/2023	INV	PD	DYED DIESEL
CHECK DATE: 02/28/2023										
23898711		01/05/2023	022823	345870	4,409.89	4,409.89	02/04/2023	INV	PD	UNLEADED
CHECK DATE: 02/28/2023										
23938613		01/19/2023	022823	345870	7,176.23	7,176.23	02/18/2023	INV	PD	COLD PRO ADDITIVE
CHECK DATE: 02/28/2023										
23938614		01/19/2023	022823	345870	3,841.35	3,841.35	02/18/2023	INV	PD	DYED DIESEL

City of Chaska

VENDOR INVOICE LIST

INVOICE	P.O.	INV DATE	CHECK RUN	CHECK #	INVOICE NET	PAID AMOUNT	DUE DATE	TYPE	STS	INVOICE DESCRIPTION
CHECK DATE: 02/28/2023										
23938615		01/19/2023	022823	345870	6,547.14	6,547.14	02/18/2023	INV	PD	UNLEADED
CHECK DATE: 02/28/2023										
					33,103.69					
101168 MELCHERT HUBERT SJODIN PLLP										
165750		02/05/2023	022823	345871	3,344.00	3,344.00	03/15/2023	INV	PD	GENERAL FUND
CHECK DATE: 02/28/2023										
165751		02/05/2023	022823	345871	562.10	562.10	03/15/2023	INV	PD	COUNCIL & PLANNING MTG
CHECK DATE: 02/28/2023										
165752		02/05/2023	022823	345871	4,587.55	4,587.55	03/15/2023	INV	PD	PLANNING & ZONING
CHECK DATE: 02/28/2023										
165753		02/05/2023	022823	345871	1,797.40	1,797.40	03/15/2023	INV	PD	ELECTRIC DEPARTMENT
CHECK DATE: 02/28/2023										
165754		02/05/2023	022823	345871	831.60	831.60	03/15/2023	INV	PD	HWY 41 DT REDEVELOPMEN
CHECK DATE: 02/28/2023										
165755		02/05/2023	022823	345871	39.60	39.60	03/15/2023	INV	PD	CREEK RD PROJECT
CHECK DATE: 02/28/2023										
165756		02/05/2023	022823	345871	2,653.20	2,653.20	03/15/2023	INV	PD	UNITED PROPERTIES-COST
CHECK DATE: 02/28/2023										
165757		02/05/2023	022823	345871	528.75	528.75	03/15/2023	INV	PD	CCC LEASES
CHECK DATE: 02/28/2023										
165758		02/05/2023	022823	345871	66.00	66.00	03/15/2023	INV	PD	HAZELTINE PLAZA
CHECK DATE: 02/28/2023										
165953		02/05/2023	022823	345871	7,001.50	7,001.50	03/15/2023	INV	PD	THE LOOP GOLF COURSE
CHECK DATE: 02/28/2023										
165954		02/09/2023	022823	345871	475.20	475.20	03/15/2023	INV	PD	401 HICKORY-WEST CREEK
CHECK DATE: 02/28/2023										
					21,886.90					
101183 METROPOLITAN COUNCIL										
JAN 2023 SAC		01/31/2023	022823	345872	24,601.50	24,601.50	02/28/2023	INV	PD	JAN SAC CHARGES
CHECK DATE: 02/28/2023										
101182 METROPOLITAN COUNCIL										
0001151435		02/02/2023	022823	345873	289,383.60	289,383.60	03/01/2023	INV	PD	MAR SEWER SERVICES FOR
CHECK DATE: 02/28/2023										

VENDOR INVOICE LIST

INVOICE	P.O.	INV DATE	CHECK RUN	CHECK #	INVOICE NET	PAID AMOUNT	DUE DATE	TYPE	STS	INVOICE DESCRIPTION
101187 METRO SALES INC										
INV2208331 CHECK DATE: 02/28/2023		01/23/2023	022823	345874	160.31	160.31	02/22/2023	INV	PD	TC COPIER CONTRACT-SEM
INV2218492 CHECK DATE: 02/28/2023		02/06/2023	022823	345874	163.00	163.00	03/08/2023	INV	PD	Contract Invoice
INV2226648 CHECK DATE: 02/28/2023		02/17/2023	022823	345874	136.00	136.00	03/19/2023	INV	PD	Ricoh/MP C3003 color
					459.31					
101217 MINNESOTA CHILD SUPPORT PMT CTR										
PR021023001510208001 CHECK DATE: 02/14/2023		02/10/2023	021423	345752	184.58	184.58	02/10/2023	INV	PD	021023 Payroll - Child
101247 MINNESOTA MUNICIPAL UTILITIES ASSN										
61244 CHECK DATE: 02/28/2023		02/17/2023	022823	345875	676.00	676.00	03/19/2023	INV	PD	S. KORTUEM LINEMAN MOD
101231 MINNESOTA FIRE CHIEFS ASSOCIATION										
5047 CHECK DATE: 02/28/2023		12/16/2022	022823	345876	220.00	220.00	03/08/2023	INV	PD	2023 MEMBERSHIP RENEWA
5569 CHECK DATE: 02/28/2023		01/20/2023	022823	345876	285.00	285.00	02/27/2023	INV	PD	FF TRAINING
					505.00					
101303 MN TEAMSTER PUBLIC AND LAW ENFORCEMENT										
Feb-23 CHECK DATE: 02/14/2023		02/10/2023	021423	345753	5,183.00	5,183.00	02/10/2023	INV	PD	Feb-23 Local #320 Unio
101276 MINNESOTA VALLEY ELECTRIC COOPERATIVE										
107050711/JAN23 CHECK DATE: 02/09/2023		01/27/2023	020923	345744	918.15	918.15	02/22/2023	INV	PD	JAN ST LITES-TOWN COUR
778377500/JAN23 CHECK DATE: 02/16/2023		02/07/2023	021623	345765	55.97	55.97	03/02/2023	INV	PD	JAN 12500 CTY RD 11 SI
778377900/JAN23 CHECK DATE: 02/16/2023		02/07/2023	021623	345765	37.75	37.75	03/02/2023	INV	PD	JAN 4100 ENGLER BLVD S
7787377800/JAN23 CHECK DATE: 02/16/2023		02/07/2023	021623	345765	35.82	35.82	03/02/2023	INV	PD	JAN 4250 ENGLER BLVD S

VENDOR INVOICE LIST

INVOICE	P.O.	INV DATE	CHECK RUN	CHECK #	INVOICE NET	PAID AMOUNT	DUE DATE	TYPE	STS	INVOICE DESCRIPTION
781385500/JAN23 CHECK DATE: 02/16/2023		02/07/2023	021623	345765	10.56	10.56	03/02/2023	INV	PD	JAN 4463 CTY RD 44
					1,058.25					
105308 MINNESOTA VALLEY UTILITY SERVICES LLC										
1347 CHECK DATE: 02/28/2023		02/14/2023	022823	345877	2,080.40	2,080.40	03/16/2023	INV	PD	SUBSTATION MAINT-JAN
101281 KRISTIE MITCHELL										
109902 CHECK DATE: 02/28/2023		02/08/2023	022823	345878	6,521.57	6,521.57	03/08/2023	INV	PD	Winter 2023 Learn to S
101341 MINNESOTA DEPT OF LABOR & INDUSTRY										
JANUARY0190352023 CHECK DATE: 02/28/2023		01/31/2023	022823	345879	12,671.15	12,671.15	02/28/2023	INV	PD	JAN PERMIT SURCHARGES
101351 MN DEPARTMENT OF TRANSPORTATION										
P00016573 CHECK DATE: 02/28/2023		02/15/2023	022823	345880	9,229.06	9,229.06	03/17/2023	INV	PD	CREEK RD RECON & BRIDG
111116 MN SHADE TREE SHORT COURSE										
109838 CHECK DATE: 02/09/2023		02/07/2023	020923	345745	450.00	450.00 PAYEE: MN SHADE TREE SHORT COURSE	02/24/2023	INV	PD	SHADE TREE COURSE-HOLD
105995 MONEY MOVERS INC										
155459 CHECK DATE: 02/28/2023		02/04/2023	022823	345881	39.50	39.50	03/04/2023	INV	PD	Jan Health Ins Reimb
105853 MOR GOLF AND UTILITY INC										
37309 CHECK DATE: 02/28/2023		02/02/2023	022823	345882	1,518.63	1,518.63	03/02/2023	INV	PD	BEVERAGE CART REPAIR P
101324 MOTOROLA										
8281563453 CHECK DATE: 02/28/2023		02/01/2023	022823	345883	478.80	478.80	03/03/2023	INV	PD	Radio microphones
102968 KIMBERLY A MOTSCHENBACHER										

City of Chaska

VENDOR INVOICE LIST

INVOICE	P.O.	INV DATE	CHECK RUN	CHECK #	INVOICE NET	PAID AMOUNT	DUE DATE	TYPE	STS	INVOICE DESCRIPTION
111-2022 CHECK DATE: 02/28/2023		01/26/2023	022823	345884	1,400.00	1,400.00	02/26/2023	INV	PD	Wellness Program-Yoga
101261 MINNESOTA RECREATION & PARK ASSOC										
109981 CHECK DATE: 02/28/2023		01/31/2023	022823	345885	499.00	499.00	02/28/2023	INV	PD	2023 Agency Membership
109982 CHECK DATE: 02/28/2023		01/01/2023	022823	345885	180.00	180.00	03/01/2023	INV	PD	2023 Membership-Grange
110055 CHECK DATE: 02/28/2023		01/01/2023	022823	345885	180.00	180.00	01/31/2023	INV	PD	2023 Membership-Yaeger
110070 CHECK DATE: 02/28/2023		01/01/2023	022823	345885	180.00	180.00	01/31/2023	INV	PD	2023 Membership-Jansen
110072 CHECK DATE: 02/28/2023		01/01/2023	022823	345885	180.00	180.00	01/31/2023	INV	PD	2023 Membership-Johnso
110073 CHECK DATE: 02/28/2023		01/01/2023	022823	345885	180.00	180.00	01/31/2023	INV	PD	2023 Membership-Link+I
110074 CHECK DATE: 02/28/2023		01/01/2023	022823	345885	180.00	180.00	01/31/2023	INV	PD	2023 Membership-Trumbr
110076 CHECK DATE: 02/28/2023		01/01/2023	022823	345885	180.00	180.00	01/31/2023	INV	PD	2023 Membership-Seiffe
110080 CHECK DATE: 02/28/2023		01/01/2023	022823	345885	180.00	180.00	01/31/2023	INV	PD	2023 Membership-Wabbe+
					1,939.00					
103088 SID TOOL CO INC										
83086986 CHECK DATE: 02/28/2023		02/02/2023	022823	345886	425.37	425.37	03/02/2023	INV	PD	SHOP SUPPLIES/SMALL TO
106657 MUNICIPAL ASSET MANAGEMENT INC										
01132022M15 CHECK DATE: 02/24/2023		02/09/2023	022423	345776	4,983.31	4,983.31	03/13/2023	INV	PD	CCC FITNESS EQUIP LEAS
111155 NAI ARCHITECTS INC										
2301509 CHECK DATE: 02/28/2023		02/15/2023	022823	345887	17,271.28	17,271.28	03/17/2023	INV	PD	ENG/DEV LOOP BLDGS
101365 STAR GROUP LLC										

VENDOR INVOICE LIST

INVOICE	P.O.	INV DATE	CHECK RUN	CHECK #	INVOICE NET	PAID AMOUNT	DUE DATE	TYPE	STS	INVOICE DESCRIPTION
4472/JAN2023 CHECK DATE: 02/07/2023		01/31/2023	020723-2	345739	5,786.94	5,786.94	02/10/2023	INV	PD	JAN PARTS & SUPPLIES
101367 NARDINI FIRE EQUIPMENT CO INC										
IV00230585 CHECK DATE: 02/28/2023		02/06/2023	022823	345888	1,148.50	1,148.50	03/06/2023	INV	PD	Annual Fire & Hood Sup
102654 NORTH AMERICAN SAFETY INC										
CM479 CHECK DATE: 02/28/2023		02/10/2023	022823	345889	-119.99	-119.99	03/10/2023	CRM	PD	C. WALLEY INITIAL CLOT
INV73307 CHECK DATE: 02/28/2023		01/17/2023	022823	345889	184.99	184.99	02/17/2023	INV	PD	C. WALLEY INITIAL CLOT
INV73308 CHECK DATE: 02/28/2023		01/17/2023	022823	345889	156.95	156.95	02/17/2023	INV	PD	C. WALLEY INITIAL CLOT
INV74025 CHECK DATE: 02/28/2023		02/08/2023	022823	345889	33.00	33.00	04/08/2023	INV	PD	SAFETY GLASSES-BLDG IN
INV74038 CHECK DATE: 02/28/2023		02/08/2023	022823	345889	29.94	29.94	04/08/2023	INV	PD	FACE MASKS-BLDG INSP
INV74164 CHECK DATE: 02/28/2023		02/13/2023	022823	345889	149.94	149.94	04/13/2023	INV	PD	SAFETY VESTS-BLDG INSP
					434.83					
100202 BLUETARP FINANCIAL INC										
51785608 CHECK DATE: 02/28/2023		02/11/2023	022823	345890	39.99	39.99	03/14/2023	INV	PD	ANNUAL CREDIT FEE
101470 O'REILLY AUTOMOTIVE STORES INC										
556275/JAN2023 CHECK DATE: 02/09/2023		01/28/2023	020923	345746	49.95	49.95	02/20/2023	INV	PD	JAN PARTS & SUPPLIES
105432 THE RADFORD COMPANY										
0000239271 CHECK DATE: 02/28/2023		01/27/2023	022823	345891	5,055.92	5,055.92	02/27/2023	INV	PD	PRV REPLACEMENT
110570 ODP BUSINESS SOLUTIONS LLC										
292674022001 CHECK DATE: 02/28/2023		02/07/2023	022823	345892	35.59	35.59	03/10/2023	INV	PD	Binders

City of Chaska

VENDOR INVOICE LIST

INVOICE	P.O.	INV DATE	CHECK RUN	CHECK #	INVOICE NET	PAID AMOUNT	DUE DATE	TYPE	STS	INVOICE DESCRIPTION
292675424001		02/10/2023	022823	345892	45.97	45.97	03/17/2023	INV	PD	Label tape
CHECK DATE: 02/28/2023										
293723902001		02/15/2023	022823	345892	79.76	79.76	03/17/2023	INV	PD	Plates, forks
CHECK DATE: 02/28/2023										
					161.32					
101465 ON SITE SANITATION INC										
0001475506		01/27/2023	020723-2	345740	404.00	404.00	02/26/2023	INV	PD	Pond Hockey Event
CHECK DATE: 02/07/2023										
0001484110		01/31/2023	020723-2	345740	-202.00	-202.00	03/02/2023	CRM	PD	Credit-cancellation du
CHECK DATE: 02/07/2023										
					202.00					
111048 JENNIFER LYNNE PANTANO										
110130		02/20/2023	022823	345893	350.00	350.00	02/28/2023	INV	PD	Adaptive Dance-Instruc
CHECK DATE: 02/28/2023										
111120 PAULSON, NOAH J										
164418		02/10/2023	022823	345894	127.37	127.37	03/10/2023	INV	PD	REPLACE PAYROLL CK 164
CHECK DATE: 02/28/2023						PAYEE: PAULSON, NOAH J				
108000 DAKOTA CURLING SUPPLIES										
108718		01/30/2023	022823	345895	1,019.00	1,019.00	02/28/2023	INV	PD	Scraper blade sharpeni
CHECK DATE: 02/28/2023										
101530 PING INC										
16562635		10/05/2022	022823	345896	-558.50	-558.50	12/31/2022	CRM	PD	RESALE CREDIT
CHECK DATE: 02/28/2023										
16705690		01/27/2023	022823	345896	-62.54	-62.54	03/31/2023	CRM	PD	SALES REBATE
CHECK DATE: 02/28/2023										
16737831		02/15/2023	022823	345896	1,673.12	1,673.12	08/14/2023	INV	PD	DEMO/RENTALS
CHECK DATE: 02/28/2023										
16737837		02/15/2023	022823	345896	2,350.46	2,350.46	04/16/2023	INV	PD	RESALE
CHECK DATE: 02/28/2023										
16740914		02/16/2023	022823	345896	2,868.39	2,868.39	04/17/2023	INV	PD	RESALE
CHECK DATE: 02/28/2023										
16740915		02/16/2023	022823	345896	1,727.39	1,727.39	08/15/2023	INV	PD	RESALE

VENDOR INVOICE LIST

INVOICE	P.O.	INV DATE	CHECK RUN	CHECK #	INVOICE NET	PAID AMOUNT	DUE DATE	TYPE	STS	INVOICE DESCRIPTION
CHECK DATE: 02/28/2023										
					7,998.32					
101543 PLUNKETTS PEST CONTROL INC										
7888847		02/01/2023	022823	345898	1,608.01	1,608.01	03/01/2023	INV	PD	Curling/Event Ctr Annu
CHECK DATE: 02/28/2023										
7902261		02/02/2023	022823	345897	65.06	65.06	03/02/2023	INV	PD	FD PEST CONTROL
CHECK DATE: 02/28/2023										
					1,673.07					
101557 POWER SYSTEM ENGINEERING INC										
9044604		12/02/2022	022823	345899	2,698.14	2,698.14	01/02/2023	INV	PD	DIFF RELAY UPGRADE
CHECK DATE: 02/28/2023										
9045648		02/02/2023	022823	345899	815.50	815.50	03/02/2023	INV	PD	CKTS 91, 92 & BUS 4 DI
CHECK DATE: 02/28/2023										
9045649		02/02/2023	022823	345899	10,516.50	10,516.50	03/02/2023	INV	PD	WO# 12916 MRS RTU REPL
CHECK DATE: 02/28/2023										
9045730		02/03/2023	022823	345899	2,325.00	2,325.00	03/03/2023	INV	PD	AMI METERING ENGINEER
CHECK DATE: 02/28/2023										
9045848		02/08/2023	022823	345899	1,910.00	1,910.00	03/08/2023	INV	PD	MISC PLANNING AND ENG
CHECK DATE: 02/28/2023										
					18,265.14					
101571 PREMIUM WATERS INC										
417080-01-23		01/31/2023	022123	345772	13.89	13.89	02/28/2023	INV	PD	CLUBHOUSE WATER
CHECK DATE: 02/21/2023										
101577 PETER OSOWSKI										
104367		02/06/2023	022823	345900	138.00	138.00	03/09/2023	INV	PD	TESTING ON STORAGE CYL
CHECK DATE: 02/28/2023										
101576 FORNER ENTERPRISES INC										
20226451		02/10/2023	022823	345901	629.00	629.00	03/10/2023	INV	PD	Squad 1227 - Graphics
CHECK DATE: 02/28/2023										
101588 PUKKA INC										
BU02452-IN		02/07/2023	022823	345902	885.12	885.12	03/07/2023	INV	PD	Curl Caps for Resale
CHECK DATE: 02/28/2023										

City of Chaska

VENDOR INVOICE LIST

INVOICE	P.O.	INV DATE	CHECK RUN	CHECK #	INVOICE NET	PAID AMOUNT	DUE DATE	TYPE	STS	INVOICE DESCRIPTION
103055 QUALITY PROPANE INC										
2855469 CHECK DATE: 02/28/2023		01/30/2023	022823	345903	90.56	90.56	03/01/2023	INV	PD	Zamboni LP Gas
2936319 CHECK DATE: 02/28/2023		02/06/2023	022823	345903	92.18	92.18	03/06/2023	INV	PD	Zamboni LP Gas
3003324 CHECK DATE: 02/28/2023		02/13/2023	022823	345903	102.17	102.17	03/13/2023	INV	PD	Zamboni LP Gas
3061643 CHECK DATE: 02/28/2023		02/20/2023	022823	345903	69.50	69.50	03/20/2023	INV	PD	Zamboni LP Gas
					354.41					
107855 STAPLES INC										
3014259 CHECK DATE: 02/28/2023		02/01/2023	022823	345905	185.97	185.97	03/03/2023	INV	PD	OFFICE SUPPLIES
30287389 CHECK DATE: 02/28/2023		01/19/2023	022823	345905	37.18	37.18	02/18/2023	INV	PD	MSB SUPPLIES
30382348 CHECK DATE: 02/28/2023		01/24/2023	022823	345905	55.57	55.57	02/23/2023	INV	PD	OFFICE SUPPLIES
30445690 CHECK DATE: 02/28/2023		01/26/2023	022823	345905	20.79	20.79	02/25/2023	INV	PD	WALL FILE
30474655 CHECK DATE: 02/28/2023		01/27/2023	022823	345904	97.56	97.56	02/26/2023	INV	PD	Labels, envelopes and
30555783 CHECK DATE: 02/28/2023		02/01/2023	022823	345905	15.48	15.48	03/03/2023	INV	PD	BATTERIES
30586652 CHECK DATE: 02/28/2023		02/02/2023	022823	345905	103.98	103.98	03/04/2023	INV	PD	PRINTER INK - ELECTRIC
30674664 CHECK DATE: 02/28/2023		02/07/2023	022823	345904	27.99	27.99	03/09/2023	INV	PD	4 inch ring binder for
30703812-1 CHECK DATE: 02/28/2023		02/08/2023	022823	345904	40.17	40.17	03/10/2023	INV	PD	Uniball pens for the w
30703812-2 CHECK DATE: 02/28/2023		02/08/2023	022823	345904	71.97	71.97	03/10/2023	INV	PD	Copy Paper for the wor
30786783-1 CHECK DATE: 02/28/2023		02/13/2023	022823	345904	83.98	83.98	03/15/2023	INV	PD	Coffee and insulated c
30786783-2 CHECK DATE: 02/28/2023		02/13/2023	022823	345904	47.98	47.98	03/15/2023	INV	PD	Green paper for workro

City of Chaska

VENDOR INVOICE LIST

INVOICE	P.O.	INV DATE	CHECK RUN	CHECK #	INVOICE NET	PAID AMOUNT	DUE DATE	TYPE	STS	INVOICE DESCRIPTION
					788.62					
101684 R & R SPECIALTIES OF WISCONSIN INC										
0078108-IN CHECK DATE: 02/28/2023		02/02/2023	022823	345906	65.00	65.00	03/02/2023	INV	PD	Zamboni Blade Sharpeni
0078257-IN CHECK DATE: 02/28/2023		02/16/2023	022823	345906	42.50	42.50	03/16/2023	INV	PD	Zamboni Blade Sharpeni
					107.50					
111127 RAMOS PACHECO, KAREN PATRICIA										
36142 CHECK DATE: 02/28/2023		02/14/2023	022823	345907	77.04	77.04	03/14/2023	INV	PD	METER DEPOSIT REFUND-1
101609 RANGE SERVANT AMERICA INC										
121886 CHECK DATE: 02/28/2023		02/03/2023	022823	345908	309.00	309.00	03/05/2023	INV	PD	RANGE TOKENS
101616 RDO EQUIPMENT COMPANY										
P9813070 CHECK DATE: 02/28/2023		02/15/2023	022823	345909	819.70	819.70	03/15/2023	INV	PD	#710 HANDLE AND NOZZLE
111121 RECYCLE TECHNOLOGIES INC										
232633 CHECK DATE: 02/28/2023		01/31/2023	022823	345910	483.97	483.97	02/28/2023	INV	PD	RECYCLING OF BURNT OUT
232657 CHECK DATE: 02/28/2023		02/04/2023	022823	345910	10.85	10.85	03/04/2023	INV	PD	RECYCLE BULBS
					494.82					
110969 RENODIN, DAVID										
10008239-REISSUE CHECK DATE: 02/16/2023		11/15/2022	021623	345766	33.37	33.37	12/15/2022	INV	PD	CREDIT BALANCE REFUND-
101638 RURAL ELECTRIC SUPPLY COOPERATIVE										
876318-00 CHECK DATE: 02/28/2023	230017	02/08/2023	022823	345911	6,346.82	6,346.82	03/08/2023	INV	PD	4 = SW CAB BASEMENT G&
101668 ROBBS ELECTRIC INC										

City of Chaska

VENDOR INVOICE LIST

INVOICE	P.O.	INV DATE	CHECK RUN	CHECK #	INVOICE NET	PAID AMOUNT	DUE DATE	TYPE	STS	INVOICE DESCRIPTION
43645		02/03/2023	022823	345912	5,885.27	5,885.27	03/03/2023	INV	PD	WO# 1047 OH TO UG - 22
CHECK DATE: 02/28/2023										
101738 SCHILLING SUPPLY COMPANY										
905797-00		02/06/2023	022823	345913	3,821.34	3,821.34	03/06/2023	INV	PD	Cleaning Supplies-CCC
CHECK DATE: 02/28/2023										
905916-00		02/15/2023	022823	345913	66.36	66.36	03/15/2023	INV	PD	Cleaning Supplies-CCC
CHECK DATE: 02/28/2023										
906676-00		02/13/2023	022823	345913	672.81	672.81	03/13/2023	INV	PD	Cleaning Supplies-CCC
CHECK DATE: 02/28/2023										
					4,560.51					
108102 SECURITAS ELECTRONIC SECURITY INC										
7001181965		01/18/2023	022823	345914	141.75	141.75	02/18/2023	INV	PD	B.BASKET MONITORING 2/
CHECK DATE: 02/28/2023										
7001181966		01/18/2023	022823	345914	193.20	193.20	02/18/2023	INV	PD	CITY HALL MONITORING 2
CHECK DATE: 02/28/2023										
					334.95					
104416 KELBRO COMPANY										
2843923		12/15/2022	022823	345915	384.75	384.75	03/02/2023	INV	PD	OAK 19 ICE MACHINE REN
CHECK DATE: 02/28/2023										
2862930		02/15/2023	022823	345915	384.75	384.75	03/15/2023	INV	PD	ICE MACHINE RENTAL
CHECK DATE: 02/28/2023										
					769.50					
111128 SHAW, MATTHEW										
36863		02/14/2023	022823	345916	58.13	58.13	03/14/2023	INV	PD	METER DEPOSIT REFUND-1
CHECK DATE: 02/28/2023										
104827 ROHN INDUSTRIES										
592216		01/23/2023	022823	345917	24.54	24.54	02/01/2023	INV	PD	Security Console
CHECK DATE: 02/28/2023										
110939 DEVTHIRTY3 LLC										
1474		02/03/2023	022823	345918	7,211.25	7,211.25	03/03/2023	INV	PD	Bldg Insp Doc Scanning
CHECK DATE: 02/28/2023										
1488		02/17/2023	022823	345918	4,964.50	4,964.50	03/17/2023	INV	PD	Bldg Insp Doc Scanning

City of Chaska

VENDOR INVOICE LIST

INVOICE	P.O.	INV DATE	CHECK RUN	CHECK #	INVOICE NET	PAID AMOUNT	DUE DATE	TYPE	STS	INVOICE DESCRIPTION
CHECK DATE: 02/28/2023										
					12,175.75					
106596 SIWEK LUMBER JORDAN INC										
65241		02/16/2023	022823	345919	515.20	515.20	03/18/2023	INV	PD	LUMBER FOR PICNIC TABL
CHECK DATE: 02/28/2023										
111126 SMITH, MELISSA										
10011104		02/14/2023	022823	345920	47.86	47.86	03/14/2023	INV	PD	METER DEPOSIT REFUND-1
CHECK DATE: 02/28/2023										
111119 SOUTHWEST METRO-401 BUILDING										
40077500-2023-1		02/05/2023	022823	345921	3,005.00	3,005.00	03/05/2023	INV	PD	JAN REBATE-BUSINESS LI
CHECK DATE: 02/28/2023						PAYEE: SOUTHWEST METRO-401 BUILDING				
101828 SOUTHWEST NEWS MEDIA										
2176273		01/12/2023	020923	345747	61.44	61.44	02/20/2023	INV	PD	2023 Summary Budget St
CHECK DATE: 02/09/2023										
2176274		01/12/2023	020923	345747	69.12	69.12	02/20/2023	INV	PD	Hearing-Easement Vacat
CHECK DATE: 02/09/2023										
2176561		01/26/2023	020923	345747	53.76	53.76	02/20/2023	INV	PD	Hearing-ZOA to Shorela
CHECK DATE: 02/09/2023										
2176562		01/26/2023	020923	345747	65.28	65.28	02/20/2023	INV	PD	Hearing-SAP Ess & Erns
CHECK DATE: 02/09/2023										
2176563		01/26/2023	020923	345747	65.28	65.28	02/20/2023	INV	PD	Hearing-Prelim Plans E
CHECK DATE: 02/09/2023										
					314.88					
101850 STANTEC CONSULTING SERVICES INC										
2040465		02/10/2023	022823	345922	515.00	515.00	03/10/2023	INV	PD	MSA
CHECK DATE: 02/28/2023										
2040466		02/10/2023	022823	345922	4,955.25	4,955.25	03/10/2023	INV	PD	RECORD PLAN/BASE MAP U
CHECK DATE: 02/28/2023										
2040467		02/10/2023	022823	345922	6,890.75	6,890.75	03/10/2023	INV	PD	SE COLLECTOR
CHECK DATE: 02/28/2023										
2040468		02/10/2023	022823	345922	42,840.15	42,840.15	03/10/2023	INV	PD	CREEK RD TRUNK SWR PH
CHECK DATE: 02/28/2023										

City of Chaska

VENDOR INVOICE LIST

INVOICE	P.O.	INV DATE	CHECK RUN	CHECK #	INVOICE NET	PAID AMOUNT	DUE DATE	TYPE	STS	INVOICE DESCRIPTION
2040477 CHECK DATE: 02/28/2023		02/10/2023	022823	345922	4,300.00	4,300.00	03/10/2023	INV	PD	NE COLLECTOR IN SW ARE
2040480 CHECK DATE: 02/28/2023		02/10/2023	022823	345922	12,961.75	12,961.75	03/10/2023	INV	PD	HILL TOWER REVISIONS
2040483 CHECK DATE: 02/28/2023		02/10/2023	022823	345922	303.00	303.00	03/10/2023	INV	PD	STORMWATER REVIEW-CHAS
2040485 CHECK DATE: 02/28/2023		02/10/2023	022823	345922	454.50	454.50	03/10/2023	INV	PD	STORMWATER REVIEW-KUSS
2040488 CHECK DATE: 02/28/2023		02/10/2023	022823	345922	1,010.00	1,010.00	03/10/2023	INV	PD	STORMWATER REVIEW-STRU
2040489 CHECK DATE: 02/28/2023		02/10/2023	022823	345922	1,974.50	1,974.50	03/10/2023	INV	PD	2021 DT ST RECONSTRUCT
2040491 CHECK DATE: 02/28/2023		02/10/2023	022823	345922	1,702.00	1,702.00	03/10/2023	INV	PD	WELL NOS 4,5,6 & 8 REH
2040492 CHECK DATE: 02/28/2023		02/10/2023	022823	345922	6,740.50	6,740.50	03/10/2023	INV	PD	CREEK RD IND ST & TURN
2040493 CHECK DATE: 02/28/2023		02/10/2023	022823	345922	2,401.50	2,401.50	03/10/2023	INV	PD	CLOVER RDG DR/FREY PRO
2040494 CHECK DATE: 02/28/2023		02/10/2023	022823	345922	10,211.80	10,211.80	03/10/2023	INV	PD	2022 DT RECONSTRUCTION
2040495 CHECK DATE: 02/28/2023		02/10/2023	022823	345922	245.00	245.00	03/10/2023	INV	PD	2ND & PINE PKG LOT RET
2040496 CHECK DATE: 02/28/2023		02/10/2023	022823	345922	47,817.45	47,817.45	03/10/2023	INV	PD	HUNDERTMARK ELEVATED T
2040497 CHECK DATE: 02/28/2023		02/10/2023	022823	345922	4,127.75	4,127.75	03/10/2023	INV	PD	BUTTERNUT LN IMPROVEME
2040498 CHECK DATE: 02/28/2023		02/10/2023	022823	345922	3,343.64	3,343.64	03/10/2023	INV	PD	MCKNIGHT WETLAND BANK
2040503 CHECK DATE: 02/28/2023		02/10/2023	022823	345922	4,872.75	4,872.75	03/10/2023	INV	PD	2022 ROUTINE BRIDGE IN
2040505 CHECK DATE: 02/28/2023		02/10/2023	022823	345922	13,050.25	13,050.25	03/10/2023	INV	PD	WELLS 11 & 12
2040867 CHECK DATE: 02/28/2023		02/10/2023	022823	345922	5,755.55	5,755.55	03/10/2023	INV	PD	PAR 30 GOLF COURSE
2040868 CHECK DATE: 02/28/2023		02/10/2023	022823	345922	5,095.75	5,095.75	03/10/2023	INV	PD	GENERAL ENGINEERING
2040871		02/10/2023	022823	345922	56,871.78	56,871.78	03/10/2023	INV	PD	WELL 7 WTP

City of Chaska

VENDOR INVOICE LIST

INVOICE	P.O.	INV DATE	CHECK RUN	CHECK #	INVOICE NET	PAID AMOUNT	DUE DATE	TYPE	STS	INVOICE DESCRIPTION
CHECK DATE: 02/28/2023										
					238,440.62					
101861 STATE SUPPLY COMPANY										
643193		02/06/2023	022823	345923	4,005.87	4,005.87	03/08/2023	INV	PD	Parts for Brine Pump 1
CHECK DATE: 02/28/2023										
643194		02/06/2023	022823	345923	847.69	847.69	03/08/2023	INV	PD	Parts for pump #7
CHECK DATE: 02/28/2023										
					4,853.56					
110200 STERICYCLE INC										
8003349569		02/18/2023	022823	345924	240.96	240.96	03/20/2023	INV	PD	Shredding Jan-Feb
CHECK DATE: 02/28/2023										
101888 STREICHERS										
I1613197		01/25/2023	022823	345925	102.97	102.97	02/28/2023	INV	PD	Explorers Belts
CHECK DATE: 02/28/2023										
I1613458		01/26/2023	022823	345925	119.90	119.90	02/28/2023	INV	PD	Explorers Nameplates
CHECK DATE: 02/28/2023										
I1613646		01/27/2023	022823	345925	43.97	43.97	02/27/2023	INV	PD	Janke-Name tags, ID Pa
CHECK DATE: 02/28/2023										
					266.84					
101892 STUART C IRBY CO										
S013051966.003	230016	02/02/2023	022823	345926	1,140.00	1,140.00	03/04/2023	INV	PD	1000 = COND UD ALUM #6
CHECK DATE: 02/28/2023										
S013399284.001		02/14/2023	022823	345926	170.00	170.00	03/16/2023	INV	PD	WIRE SEALING CAPS
CHECK DATE: 02/28/2023										
S0134049656.001	230018	02/09/2023	022823	345926	1,386.00	1,386.00	03/11/2023	INV	PD	6 = METER SOCKET 13 TE
CHECK DATE: 02/28/2023										
					2,696.00					
111117 SUPERIOR TECH PRODUCTS										
5643-R		02/03/2023	022823	345927	1,491.58	1,491.58	02/18/2023	INV	PD	ROLLER FOR GM 3500
CHECK DATE: 02/28/2023										
100757 THE GRAPHIC EDGE LLC										
1659775		01/31/2023	022823	345928	240.00	240.00	03/02/2023	INV	PD	Adult Sports - Men's B

VENDOR INVOICE LIST

INVOICE	P.O.	INV DATE	CHECK RUN	CHECK #	INVOICE NET	PAID AMOUNT	DUE DATE	TYPE	STS	INVOICE DESCRIPTION
CHECK DATE: 02/28/2023										
1662679		02/10/2023	022823	345928	259.93	259.93	03/12/2023	INV	PD	Cheer Clinic - T-Shirt
CHECK DATE: 02/28/2023										
					499.93					
109940 THE HUNTINGTON NATIONAL BANK										
8167566		02/09/2023	021623	345767	284.93	284.93	03/03/2023	INV	PD	FD EQUIP LEASE PMT 45
CHECK DATE: 02/16/2023										
104908 TIMESAVER OFF SITE SECRETARIAL INC										
M27937		01/30/2023	022823	345929	514.75	514.75	02/28/2023	INV	PD	COUNCIL, EDA, PLANNING
CHECK DATE: 02/28/2023										
M27977		02/13/2023	022823	345929	552.50	552.50	03/13/2023	INV	PD	HRC, COUNCIL, PLANNING
CHECK DATE: 02/28/2023										
					1,067.25					
101966 TK ELEVATOR CORPORATION										
3007052886		02/01/2023	022823	345930	310.00	310.00	03/01/2023	INV	PD	Feb CCC Elevator Servi
CHECK DATE: 02/28/2023										
3007069128		02/01/2023	022823	345930	1,395.00	1,395.00	03/01/2023	INV	PD	CITY HALL/WTP ELEVATOR
CHECK DATE: 02/28/2023										
					1,705.00					
109723 TOPCON SOLUTIONS INC										
INV228040		02/02/2023	022823	345931	3,648.00	3,648.00	03/04/2023	INV	PD	BLUEBEAM LICENSE/SUPPO
CHECK DATE: 02/28/2023										
INV228042		02/02/2023	022823	345931	367.08	367.08	03/04/2023	INV	PD	BLUEBEAM-ROMINE (PRORA
CHECK DATE: 02/28/2023										
					4,015.08					
103742 TRAVELERS INDEMNITY COMPANY										
2367D0070-2023		02/09/2023	022823	345932	144,595.00	144,595.00	03/01/2023	INV	PD	2023 BOILER & MACHINER
CHECK DATE: 02/28/2023										
102026 API GARAGE DOOR INC										
Z231588		02/02/2023	022823	345933	630.00	630.00	03/02/2023	INV	PD	EMERGENCY CALL FOR DOO
CHECK DATE: 02/28/2023										
Z232294		02/10/2023	022823	345933	1,196.12	1,196.12	03/10/2023	INV	PD	TC GARAGE DOOR REPAIR

VENDOR INVOICE LIST

INVOICE	P.O.	INV DATE	CHECK RUN	CHECK #	INVOICE NET	PAID AMOUNT	DUE DATE	TYPE	STS	INVOICE DESCRIPTION
CHECK DATE: 02/28/2023										
					1,826.12					
106577 TWIN CITY HARDWARE COMPANY INC										
PSI2172307		02/08/2023	022823	345934	77.36	77.36	03/08/2023	INV	PD	HANDICAP BUTTON
CHECK DATE: 02/28/2023										
102028 TWIN CITY WATER CLINIC INC										
18590		02/06/2023	022823	345935	100.00	100.00	03/08/2023	INV	PD	WELL #4 1ST TEST
CHECK DATE: 02/28/2023										
18593		02/08/2023	022823	345935	200.00	200.00	03/10/2023	INV	PD	FILTER #3 & WELL #4 TE
CHECK DATE: 02/28/2023										
18602		02/08/2023	022823	345935	510.00	510.00	03/10/2023	INV	PD	JANUARY SAMPLES
CHECK DATE: 02/28/2023										
18617		02/08/2023	022823	345935	100.00	100.00	03/10/2023	INV	PD	WTP FILTER #3 TEST 2
CHECK DATE: 02/28/2023										
					910.00					
110053 TX CHILD SUPPORT SDU										
PR0210230012725283		02/10/2023	021423	345754	147.69	147.69	02/10/2023	INV	PD	021023 Payroll - Child
CHECK DATE: 02/14/2023										
102250 TYLER BUSINESS FORMS										
Invoice-81215		01/25/2023	022823	345936	1,034.82	1,034.82	02/24/2023	INV	PD	AP CHECK STOCK
CHECK DATE: 02/28/2023										
102129 UNITED FARMERS COOPERATIVE										
884018		02/14/2023	022823	345937	355.25	355.25	03/25/2023	INV	PD	SALT FOR ICE
CHECK DATE: 02/28/2023										
102052 UNIQUE PAVING MATERIALS CORP										
71538		01/31/2023	022823	345938	246.50	246.50	02/28/2023	INV	PD	COLD MIX FOR PATCHING
CHECK DATE: 02/28/2023										
71705		02/07/2023	022823	345938	280.50	280.50	03/07/2023	INV	PD	COLD MIX PATCH
CHECK DATE: 02/28/2023										
					527.00					
102064 US BANK										

City of Chaska

VENDOR INVOICE LIST

INVOICE	P.O.	INV DATE	CHECK RUN	CHECK #	INVOICE NET	PAID AMOUNT	DUE DATE	TYPE	STS	INVOICE DESCRIPTION
6800510 CHECK DATE: 02/28/2023		01/25/2023	022823	345939	500.00	500.00	03/02/2023	INV	PD	2021A PAYING AGENT FEE
6803921 CHECK DATE: 02/28/2023		01/25/2023	022823	345939	1,600.00	1,600.00	03/08/2023	INV	PD	2015D TRUSTEE FEE
					2,100.00					
107687 UNIVERSAL PROTECTION SERVICE LP										
13815823 CHECK DATE: 02/28/2023		01/26/2023	022823	345940	178.29	178.29	02/26/2023	INV	PD	Event Ctr Security 1/2
102061 USA BLUE BOOK										
238821 CHECK DATE: 02/28/2023		01/18/2023	022823	345941	258.26	258.26	02/18/2023	INV	PD	WATER TESTING SUPPLIES
107815 UTILITY LOGIC LLC										
13798 CHECK DATE: 02/28/2023		02/01/2023	022823	345942	271.27	271.27	03/01/2023	INV	PD	SENSOR REPLACEMENT/LAB
107819 VERTIV CORPORATION										
108282 CHECK DATE: 02/28/2023		01/31/2023	022823	345943	7,606.76	7,606.76	03/02/2023	INV	PD	BATTERY REPLACEMENTS
13022385 CHECK DATE: 02/28/2023		09/01/2021	022823	345943	3,726.99	3,726.99	03/13/2023	INV	PD	HVAC UPS REMOTE MONITO
31019028 CHECK DATE: 02/28/2023		02/15/2023	022823	345943	-255.99	-255.99	03/15/2023	CRM	PD	SALES TAX CREDIT-INV 1
					11,077.76					
102115 VIKING AUTOMATIC SPRINKLER CO										
1025-F248293 CHECK DATE: 02/28/2023		11/29/2022	022823	345944	1,735.00	1,735.00	02/28/2023	INV	PD	HISTORY CENTER SPRINKL
102227 ONVOY LLC										
0009426230201 CHECK DATE: 02/09/2023		02/01/2023	020923	345748	406.03	406.03	02/25/2023	INV	PD	FEB EDU CTR INTERNET/E
0009486230201 CHECK DATE: 02/09/2023		02/01/2023	020923	345748	1,015.08	1,015.08	02/25/2023	INV	PD	FEB CITY HALL ETHERNET

VENDOR INVOICE LIST

INVOICE	P.O.	INV DATE	CHECK RUN	CHECK #	INVOICE NET	PAID AMOUNT	DUE DATE	TYPE	STS	INVOICE DESCRIPTION
					1,421.11					
102133 WAGNER PRESS & GRAPHICS										
36155		02/07/2023	022823	345945	225.00	225.00	03/07/2023	INV	PD	COLD WEATHER RULE BROC
CHECK DATE: 02/28/2023										
36170		02/09/2023	022823	345945	35.00	35.00	03/10/2023	INV	PD	Business card -#424
CHECK DATE: 02/28/2023										
					260.00					
102146 WATER SPECIALTY OF MINNESOTA INC										
12892		02/15/2023	022823	345946	1,894.74	1,894.74	03/15/2023	INV	PD	Pool Chemicals
CHECK DATE: 02/28/2023										
102166 WESCO DISTRIBUTION INC										
183657		02/03/2023	022823	345947	545.76	545.76	03/03/2023	INV	PD	BATTERY PRUNING SAWS
CHECK DATE: 02/28/2023										
110788 WEX HEALTH INC										
0001679721-IN		01/31/2023	021623	345768	200.00	200.00	03/02/2023	INV	PD	JAN VEBA PARTICIPANT F
CHECK DATE: 02/16/2023										
107821 WILLOW PROPERTIES #11 LLC										
260495600-2023-1		02/05/2023	022823	345948	4,950.00	4,950.00	03/05/2023	INV	PD	JAN REBATE-BUSINESS LI
CHECK DATE: 02/28/2023										
102189 WM MUELLER & SONS										
284313		01/31/2023	022823	345949	254.00	254.00	02/25/2023	INV	PD	W/S STOCKPILE
CHECK DATE: 02/28/2023										
111150 LOREN DAVID WOLFE										
110045		02/14/2023	022823	345950	175.00	175.00	03/15/2023	INV	PD	Entertainment for Lodg
CHECK DATE: 02/28/2023										
110454 WRIGHT, KEVIN										
109752		01/16/2023	022823	345951	150.00	150.00	03/02/2023	INV	PD	MLK BREAKFAST BAKERY I
CHECK DATE: 02/28/2023										
102220 XIGENT SOLUTIONS LLC										

VENDOR INVOICE LIST

INVOICE	P.O.	INV DATE	CHECK RUN	CHECK #	INVOICE NET	PAID AMOUNT	DUE DATE	TYPE	STS	INVOICE DESCRIPTION
85653		01/29/2023	022823	345952	5,971.02	5,971.02	03/05/2023	INV	PD	NETAPP WARRANTY IT
CHECK DATE: 02/28/2023										
85667		01/31/2023	022823	345952	57,651.32	57,651.32	03/07/2023	INV	PD	SMARTNET & VPN LICENSI
CHECK DATE: 02/28/2023										
		432 INVOICES			3,204,737.59					

** END OF REPORT - Generated by Michelle Robbin **

City of Chaska

VENDOR INVOICE LIST

Electronic Payments

INVOICE	P.O.	INV DATE	CHECK RUN	CHECK #	INVOICE NET	PAID AMOUNT	DUE DATE	TYPE	STS	INVOICE DESCRIPTION
105243 ALERUS FINANCIAL										
C136350 CHECK DATE: 02/21/2023		02/06/2023	WIRE_001	3610	139.80	139.80	02/21/2023	DIR	PD	JAN PARTICIPANT FEES,
107490 GREAT-WEST LIFE & ANNUITY INSURANCE COMPANY										
109873 CHECK DATE: 02/13/2023		02/10/2023	021323	3598	6,987.02	6,987.02	02/13/2023	DIR	PD	021023 Payroll - HCSP
107744 GREAT-WEST LIFE & ANNUITY INSURANCE COMPANY										
109874 CHECK DATE: 02/13/2023		02/10/2023	021323	3599	850.00	850.00	02/13/2023	DIR	PD	021023 Payroll - MNDCP
110382 ENTERPRISE FM TRUST										
FBN4672817 CHECK DATE: 02/17/2023		02/04/2023	021723	3609	7,608.96	7,608.96	02/20/2023	DIR	PD	FEB FLEET LEASES
101756 MII LIFE INCORPORATED										
16392070 CHECK DATE: 02/22/2023		02/09/2023	022223	3611	144.00	144.00	02/22/2023	DIR	PD	FEB FSA PARTICIPANT FE
40504665-2022 CHECK DATE: 02/08/2023		02/07/2023	020823	3590	1,054.75	1,054.75	02/08/2023	DIR	PD	2022-2/8/23 FSA REIMB-
40504665-2023 CHECK DATE: 02/08/2023		02/07/2023	020823	3591	741.02	741.02	02/08/2023	DIR	PD	2023-2/8/23 FSA REIMB-
40512793-2022 CHECK DATE: 02/15/2023		02/14/2023	021523	3600	795.00	795.00	02/15/2023	DIR	PD	2022 2/15/23 FSA REIMB
40512793-2023 CHECK DATE: 02/15/2023		02/14/2023	021523	3601	341.62	341.62	02/15/2023	DIR	PD	2023 2/15/23 FSA REIMB
40521220-2023 CHECK DATE: 02/22/2023		02/21/2023	022223	3612	833.36	833.36	02/22/2023	DIR	PD	2023-2/22/23 FSA REIMB
					3,909.75					
100927 INTERNAL REVENUE SERVICE										
109867 CHECK DATE: 02/10/2023		02/10/2023	021023	3593	148,043.29	148,043.29	02/10/2023	DIR	PD	021023 Payroll - SS, M
101346 MINNESOTA COMMISSIONER OF REVENUE										

Report generated: 02/24/2023 10:39
User: 8482mrob
Program ID: apinvlst

VENDOR INVOICE LIST

INVOICE	P.O.	INV DATE	CHECK RUN	CHECK #	INVOICE NET	PAID AMOUNT	DUE DATE	TYPE	STS	INVOICE DESCRIPTION
2023/0131-CC CHECK DATE: 02/16/2023		01/31/2023	WIRE_001	3605	10,334.45	10,334.45	02/16/2023	DIR	PD	JAN-23 CARVER CTY TRAN
2023/0131-SLS/UB CHECK DATE: 02/16/2023		01/31/2023	WIRE_001	3603	143,210.56	143,210.56	02/16/2023	DIR	PD	JAN-23 GEN/UB SALES TA
2023/0131-USE CHECK DATE: 02/16/2023		01/31/2023	WIRE_001	3604	1,684.82	1,684.82	02/16/2023	DIR	PD	JAN-23 USE TAX
					155,229.83					
101343 MINNESOTA DEPT OF REVENUE-PAYROLL WIRES										
109868 CHECK DATE: 02/13/2023		02/10/2023	021323	3597	29,575.04	29,575.04	02/13/2023	DIR	PD	021023 Payroll - MN St
101249 MINNESOTA MUNICIPAL POWER AGENCY										
3813 CHECK DATE: 02/17/2023		02/02/2023	021723	3608	2,619,987.33	2,619,987.33	02/20/2023	DIR	PD	JAN ELECTRIC SVC
101376 NATIONWIDE RETIREMENT SOLUTIONS(USCM)										
109869 CHECK DATE: 02/10/2023		02/10/2023	021023	3594	15,559.09	15,559.09	02/10/2023	DIR	PD	021023 Payroll - 457 C
106955 NATIONWIDE RETIREMENT SOLUTIONS(USCM)										
109872 CHECK DATE: 02/10/2023		02/10/2023	021023	3596	5,657.42	5,657.42	02/10/2023	DIR	PD	021023 Payroll - Roth
104668 OPTUM BANK INC										
109871 CHECK DATE: 02/09/2023		02/10/2023	WIRE_001	3592	18,898.81	18,898.81	02/10/2023	DIR	PD	021023 Payroll - HSA C
110135 CHECK DATE: 02/15/2023		02/11/2022	WIRE_001	3607	7,353.88	7,353.88	02/15/2023	DIR	PD	021122 Payroll-HSA Con
					26,252.69					
101498 PCARD										
2023/0213-PC CHECK DATE: 02/22/2023		02/13/2023	022223-1	3614	99,002.15	99,002.15	02/22/2023	DIR	PD	FEB 2023 PCARD PURCHAS
101525 PITNEY BOWES POSTAGE										
2023/0202-PB CHECK DATE: 02/02/2023		02/02/2023	WIRE_001	3589	50.00	50.00	02/02/2023	DIR	PD	ANNUAL EFT FEE

Report generated: 02/24/2023 10:39
User: 8482mrob
Program ID: apinvlst

VENDOR INVOICE LIST

INVOICE	P.O.	INV DATE	CHECK RUN	CHECK #	INVOICE NET	PAID AMOUNT	DUE DATE	TYPE	STS	INVOICE DESCRIPTION
2023/0221-PB CHECK DATE: 02/22/2023		02/21/2023	022223	3613	1,200.00	1,200.00	02/22/2023	DIR	PD	2/21/23 REPLENISH POST
					1,250.00					
109689 PLANSOURCE BENEFITS ADMINISTRATION INC										
FEB2023 CHECK DATE: 02/15/2023		01/25/2023	021523	3602	4,837.11	4,837.11	02/15/2023	DIR	PD	FEB INS PREM-LTD/CI/AC
101506 PUBLIC EMPLOYEES RETIREMENT ASSOCIATION										
109870 CHECK DATE: 02/10/2023		02/10/2023	021023	3595	111,618.52	111,618.52	02/10/2023	DIR	PD	021023 Payroll - PERA
110942 RCS RCA OAK RIDGE LLC										
2 CHECK DATE: 02/16/2023		02/16/2023	WIRE_001	3606	1,347,810.28	1,347,810.28	02/16/2023	DIR	PD	Draw#2-Costco construc
101973 CARVER COUNTY TITLE MANAGEMENT INC										
6TH ST BRIDGE FEES CHECK DATE: 02/02/2023		01/25/2023	WIRE_001	3588	90.25	90.25	02/02/2023	DIR	PD	EASEMENT RECORDING FEE
HWY 41-303 6TH ST E CHECK DATE: 02/02/2023		01/24/2023	WIRE_001	3587	8,290.25	8,290.25	02/02/2023	DIR	PD	SW METRO DST 288 PROPE
HWY 41-308 6TH ST E CHECK DATE: 02/02/2023		01/24/2023	WIRE_001	3586	19,130.25	19,130.25	02/02/2023	DIR	PD	LINK PROPERTY PURCHASE
		29 INVOICES			4,611,829.03					

** END OF REPORT - Generated by Michelle Robbin **

Report generated: 02/24/2023 10:39
User: 8482mrob
Program ID: apinvlst

Biweekly Report

February 27, 2023

By:

Matt Podhradsky

COUNCIL MEETING/WORK SESSION SCHEDULE

Below is a list of the upcoming Council Meetings and Work Sessions to plan for over the next several weeks:

February 27th: There **will not** be a Work Session prior to this Council Meeting. The main item we will have on the agenda for Monday night will be deciding on going forward with Phase II of the Naming Rights Analysis which is coming out of the last Park Board meeting. Mayor Windschitl is traveling, so Mayor Pro Tem Huang will be leading this meeting.

March 6th: From 5:30-7:00 pm we will have a Closed Session of the City Council to hold the City Administrator's Annual Review. Elise is putting together information to share with you as part of that process including my annual Department Head review results and a memo talking about the progress of the goals that were established as part of my last review. She is planning on getting that information out to you sometime early next week. We will have a regular meeting to follow.

March 20th: At this time we are not certain whether we will have a work session that night. We will keep you informed as that becomes clearer. We will have a regular Council meeting that night.

If you have any questions, or are unable to attend any of these meetings, please let me know.

COUNCIL/DEPARTMENT HEAD STRATEGIC PLANNING RETREAT

Just as a continued reminder that we have chosen Tuesday and Wednesday, March 14th, and 15th as the dates for this year's Council/Department Head retreat. We will plan on starting the days at 8:30 am each day and adjourning at 4:30 pm. The retreat will take place in the Fire Department Training Room with Hue Life (Richard and Irina Fursman) being the facilitators of this retreat.

Staff will be working with the Fursmans to come up with an Agenda for the day and will let you know if there is any "Pre-retreat" work that needs to be completed prior to the actual dates of the retreat.

As we have discussed in the past, I believe the Council/Department Head retreats have been key to successes we have seen in the past, as they allow us to all get together and come to a

mutual understanding of Vision and Priority Goals for the City, as well as what it will take to accomplish these goals. It helps to get everyone on the same page and work in a common direction.

If you have any questions on this, just let me know. I look forward to our time together!

EMPLOYEE YEARS-OF-SERVICE APPRECIATION BREAKFAST

Each year during the first quarter of the year we hold an all-employee breakfast at the Event Center to share our appreciation with our City Employees for all of the work they do throughout the course of the year, and to recognize employees who have hit important milestones in their years of employment at the City of Chaska. This year the event will be held from 7:30-9 am on Tuesday March 7th. As part of the event we will also be having presentations to recap the year in review and talk about what to expect as we go through 2023.

We have been notified by enough Council members who are interested in attending that we will be posting this breakfast as an event/meeting open to the public. Because of that, all Council members can attend the event if you should wish. We would love to see any of you there that are able to attend. It is always a highlight of our year.

2022 MMPA YEAR IN REVIEW

At the most recent meeting of MMPA, Staff from Avant Energy did provide to the board a recap of the 2022 operational year for MMPA. I think this presentation does a good job of summarizing some of the accomplishments of the year, including having wholesale rates just over 10% lower than Xcel, and reaching 43% of our portfolio for energy production coming from Renewable resources. MMPA was able to accomplish this even in a year where the economics of raw energy products was unpredictable and high. During other business at the Council meeting on Monday I will highlight some of the accomplishments in this report as well as provide updates on what we have found as we look at the outcomes/expectations of the newly passed Energy Bill from the MN State Legislature. I hope that this information will not only show you where we have come over the last 12 months, but also give you a sense on what to expect as we move through the next several years of meeting our Renewable and Carbon-Free energy standards.

DOWNTOWN REAR ENTRANCE DESIGN GUIDELINES APPROVED

As the Council is aware, as part of the Highway 41 reconstruction project all on-street parking along Highway 41 is being lost with its replacement coming in the form of new public parking lots behind businesses that front Highway 41. With these businesses now having entrances fronting on Highway 41, Staff has been working with the businesses to come up with a plan for how to re-orient secondary entrances to the rear of buildings and to look at how we can utilize existing assistance programs we have to help pay for some of these improvements. The HPC recently took up this issue by adopting a Downtown Rear Entrance Design Guideline at their February 7th meeting. Attached to this bi-weekly is a memo from Elise summarizing what was adopted, as well as a copy of the actual Design manual itself. Elise or I will be able to answer questions or provide insight into what is being worked on with businesses at the Council meeting on Monday night if you are interested in getting more information.

UPDATE ON ARCHITECTURAL FIRM SELECTION FOR PUBLIC SAFETY FACILTY

This past week, the Staff subcommittee that has been working on the RFP Process for selecting an architectural firm for the new Public Safety facility did complete its final interviews with the two remaining firms in the running, and was able to complete touring a number of facilities each firm has been a part of. Early next week we will be debriefing on the information we have gathered and will be in a position to make a recommendation to the City Council at the March 6th meeting of which architectural firm to move forward with. While this has taken more time than we would have liked, I am very glad that we have taken this extra time as I think it has allowed us to really understand the things that will be most important during the process of designing the facility, and has provided us all with some foundational information from what we have seen in other facilities that will help us best design a building that will be most functional for us as we move into the future. Once chosen, each architectural firm that is still in the running will be ready to immediately start the work of designing the facility to keep us on track to break ground in the Spring of 2024 with a target of Fall 2025 to be complete. If there are any questions on this process, do not hesitate to ask me.

SNOWSTORM COVERAGE

I wanted to take this opportunity to thank all City Staff that involved in the operations of helping to cleanup after this latest snow storm, and to those public safety personnel that put in a lot of extra time over the past few days to make sure that we could still quickly respond to emergencies should the need arise. Our crews did a fantastic job of keeping up with the snow as it stretched over a 3-day period, and will be called back again this weekend to haul snow to be prepared should another storm come in the near future. We also had our paid-on-call duty crews at the Fire Station for the entirety of the storm making sure we did not have to have them drive into the station and then go out if an emergency arose. They took time out of their normal work and family schedule to make sure these times were covered. Thank You! All of the efforts truly made a difference in keeping the community safe during the duration of the Storm!

CITY SQUARE WEST BILLS INTRODUCED

I wanted to give the Council an update on our seeking State Bond Funding to support the development of our City Square West project. I am pleased to share that both Rep Rehm and Senator Coleman both introduced bills this week supporting the City Square West project for $25 million, which is what we had requested. While there is still a lot of work to do to get these individual bills considered as part of the final Bonding Bill, the process can not even start if legislation isn't introduced. Both have stepped forward to support this project as a priority for their district which is greatly appreciated. If you have any questions about this project or the legislative process for this, please let me know.

Minnesota Municipal Power Agency

2022 Year in Review

February 21, 2023

Outline

- Accomplishments in 2022
- Financial Review of 2022
- Operations Review of 2022
- Business Environment in 2023
- Looking Ahead to 2023

2022 Accomplishments

- Rates 10% Below Xcel
- Members Extended Contracts to 2060
- Fitch Upgraded MMPA from A+ to AA-
- Walleye Wind Farm Placed Into Service

Rates 10% Below Xcel

- MMPA Average Rate: $ 91.80
- Xcel Average Rate: $101.57
- MMPA's Rate Was 10% Below During a Period of:
  - Higher Inflation
  - Higher Interest Rates
  - Volatile Natural Gas and Electric Prices
  - COVID-19 Effects (Labor Markets, Supply Chain)

Member Contracts Extended to 2060

- 10 of 12 Members Have Extended MMPA Contracts Through 2060
  - 95% of Agency Load
- Objective: To Allow MMPA to Issue 30-Year Debt through 2030
  - Reduces Costs and Rates
- Two Members Still Considering Contract Extension
  - Agency Offer Open through March 31, 2023

Fitch Bond Rating Upgrade

- Fitch Upgraded MMPA's Bond Rating from A+ to AA-
- Fitch Commented on MMPA's
  - Competitive Rates
  - Strong Financial Performance
  - Strong Member Credit Quality
- Reduces Cost of New Debt

	AAA
	AA+
	AA
MMPA ->	AA-
	A+
	A
NSP MN ->	A-
	BBB+
	BBB
	BBB-

Walleye Wind Farm in Service

- Walleye Wind Now in Service
- Annual Energy: ~438,000 MWh
  - 23% of Projected MMPA Load
- Reduces Fossil Fuel Price Risk

2022 Financial Review

- Net Income of $7 Million
- Unrestricted Cash Increased by $17 Million

2022 Operations Review

- Generation Portfolio Produced 1.2 Million MWh

	MWh
Faribault	650,619
Shakopee	33,038
MRS	733
Black Oak	333,065
Oak Glen	112,675
Walleye	29,497
HTBE	23,332
Buffalo Solar	11,094
Total	1,194,053

2022 Operations Review

- Generation Portfolio Produced $14.1 Million of Margins

	Margin ($000)
Faribault	8,830
Shakopee	504
MRS	(60)
Oak Glen	3,794
HTBE	1,026
Total	14,094

- Plant Margins Reduce Costs to Members

2023 Business Environment

- Gas & Electric Prices Have Decreased Substantially
- Yield Curve Remains Inverted
- Inflation Still High But Decreasing
- DFL In Full Control of Minnesota Government
- Inflation Reduction Act Provides Direct Pay for ITC
  - Reduces Cost of Renewable Investment

Looking Ahead to 2023

- Budgeted Rates 2.1% Lower than 2022
- January & February Rates Lower than Budget
- 43% Renewable
- HTBE RNG to Come Online

MMPA

Minnesota Municipal Power Agency

the power of your hometown

City of Chaska
Memorandum

To: Mayor and City Council
From: Elise Durbin, Assistant City Administrator
Date: February 27, 2023
Subject: Downtown Chaska Rear Entrance Guidelines

Background

As Council is aware, with the Highway 41 project scheduled to be constructed this year, on-street parking on Highway 41 is being removed and new public parking lots and paseos are being created east side of Highway 41 behind the existing buildings—in particular between 2nd and 3rd, 4th and 5th, and between 5th and Highway 61.

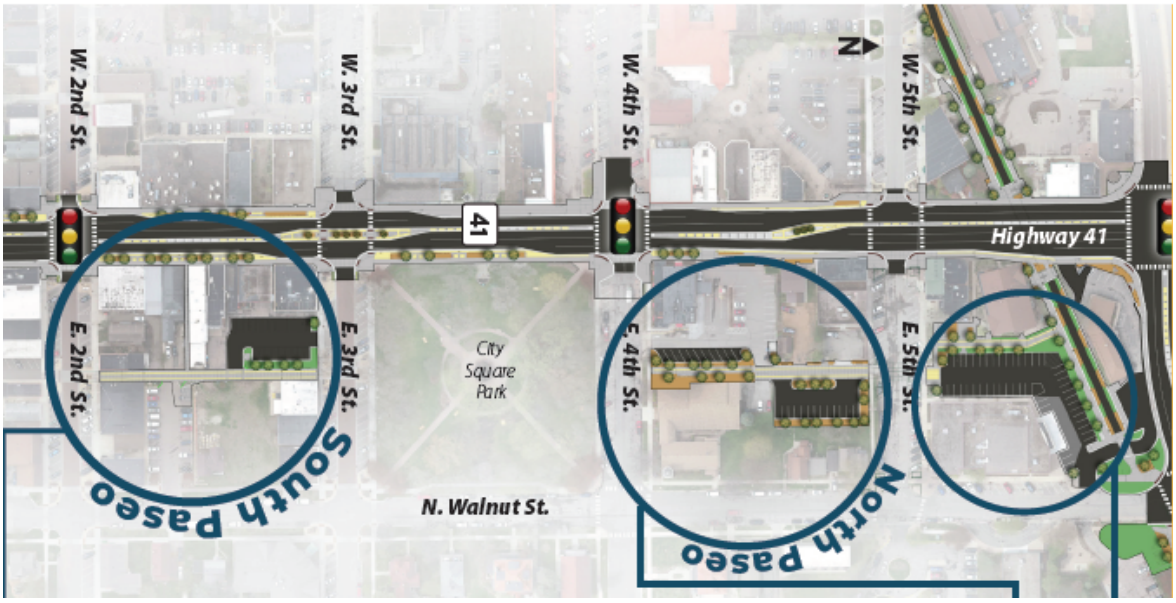

Today, most customers accessing businesses (especially on the east side of Highway 41) enter from the front, along Highway 41. With the improvements that are coming this summer, customers (especially those arriving by car) will likely find it more convenient to enter the rear entrances of the buildings.

Given this upcoming change, it prompted staff to look at ideas of how property/building/business owners can enhance their rear entrances to make it more convenient and inviting for their customers, and for visitors to downtown. HKGi was hired to develop a design manual that can then be used by business and property owners interested in enhancing their rear entrances. This design manual is meant to be similar to other manuals such as the Downtown Chaska Signage Design Guidelines, Chaska Wayfinding Signage Master Plan and the Downtown Preservation Design Manual.

In summer 2022, one-on-one meetings were held with business and property owners on the east side of Highway 41 with a focus on those between 2nd and 3rd street to understand issues, opportunities and ideas that these guidelines could assist with.

Downtown Chaska Business Rear Entrance Design Guidelines

The Downtown Chaska Business Rear Entrance Design Guidelines document is attached and divided into three sections. Each section then provides detailed information. These sections include:

- Introduction
  The introduction section provides context about the Highway 41 project and why these design guidelines are being developed. Additionally, the objectives behind the design guidelines are listed and how these guidelines are to be applied are included in this section.

- Design Guidelines
  The design guidelines are the bulk of the document. There are individual pages dedicated to architectural and site elements including: doors/windows, exterior wall materials/awnings/canopies, lighting, signage/wayfinding, landscaping, and private outdoor spaces. Each page provides ideas and examples on how business and property owners can update their rear entrances.

- City Permits and Funding (building permits, site alteration permits, signage permits, storefront improvement program)
  This final section provides guidance for business and property owners who wish to move forward with a project. It includes not only the city's required processes, but also financial resources available.

Next Steps

At the February 7 Historic Preservation Commission meeting, the HPC adopted the guidelines. Since no formal action is required by the City Council, this memo is serving as an informational item. The next step will be for staff to review the Storefront Improvement Program and update them to make sure these guidelines are accounted for in there.

Please reach out if there are any questions.

DOWNTOWN CHASKA BUSINESS REAR ENTRANCES DESIGN GUIDELINES

DRAFT FEBRUARY 1, 2023

CITY OF Chaska MINNESOTA

HK3i

ACKNOWLEDGEMENTS

CITY STAFF

Elise Durbin, AICP, Assistant City Administrator

Elizabeth Hanson, AICP, City Planner

PROPERTY OWNERS & BUSINESS TENANTS

The following property and business owners were interviewed by city staff/consultant to gain an understanding of issues, opportunities, and ideas for improvements to their building rear facades and entrances:

Nate Arnold

Katie Barton

Tari Clay

Randy Clay

Roz Peterson

Bhante Sathi

John Siegfried

Becky Trong

Ameilia Westerholm

CONSULTANT

HKGi

Approved by the City of Chaska ____, 2023

CONTENTS

01 INTRODUCTION **1**

CONTEXT 1

OBJECTIVES 2

APPLICABILITY 2

02 DESIGN GUIDELINES **3**

ELEMENTS 3

DOORS AND WINDOWS 4

EXTERIOR WALL MATERIALS, AWNINGS & CANOPIES 5

LIGHTING 7

SIGNAGE + WAYFINDING 9

LANDSCAPING 11

PRIVATE OUTDOOR SPACES 13

03 CITY PERMITS AND FUNDING **15**

BUILDING PERMITS (GENERAL) 15

SITE ALTERATION PERMITS 15

SIGNAGE PERMITS 15

STOREFRONT IMPROVEMENT PROGRAM 16

01. INTRODUCTION

CONTEXT

WHY ARE THESE DESIGN GUIDELINES NEEDED?

State Highway 41/ Chestnut Street through downtown Chaska has been redesigned and will be reconstructed in 2023. The current 4-lane highway will become a two-lane highway with dedicated turn lanes to better balance the needs of vehicle movements with pedestrian movements and spaces. The addition of wider sidewalks, pedestrian/bicyclist crossings, street trees and planters, and gathering spaces will create a safer, more comfortable, and inviting environment for all users. These roadway improvements will also preserve and enrich the downtown environment to attract more businesses and people to the downtown.

As part of the roadway project, on-street parking on Highway 41 is being removed. To replace the loss of on-street parking, the City of Chaska is creating new public parking lots and pedestrian-oriented alleys/paseos behind the existing commercial buildings on the east side of Highway 41—in particular between 2nd and 3rd, 4th and 5th, and 5th and Highway 61. The new parking areas have been designed to complement the new paseo connections that are also planned for the downtown. The paseo concept strives to activate the public alleys for pedestrians and provide outdoor gathering and seating areas for business patrons. The paseos are planned to include decorative paving, bollards, pedestrian-scaled lighting, heritage columns/walls, plazas, benches, and wayfinding signage that align with the historic character of Downtown Chaska.

As a result, it will become more convenient for customers and visitors parking behind the buildings or walking along the paseos to use the rear entrances of businesses. It is important for businesses to re-think how they welcome and interact with arriving customers and visitors. These design guidelines are intended to help property and business owners with designing and implementing improvements to their rear entrances.

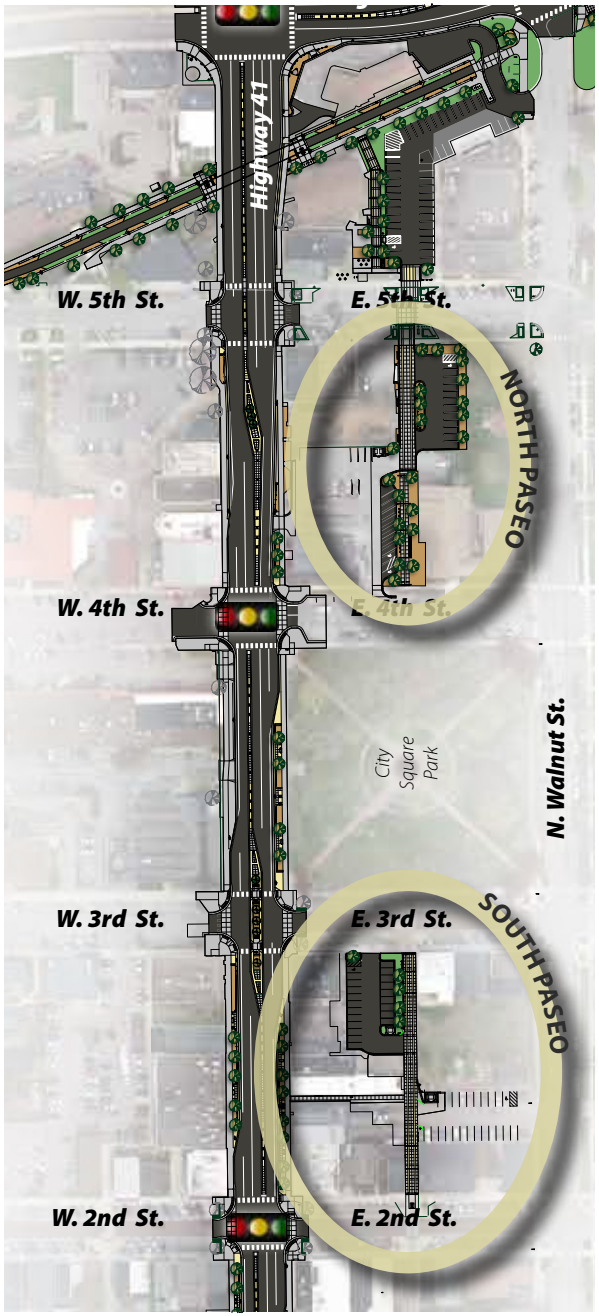

Diagram of future Hwy 41 and Paseo Improvements in Downtown Chaska.

OBJECTIVES

These design guidelines have been created to achieve the following objectives:

1. Strengthen the economy of downtown Chaska by promoting the development of existing and new businesses.

2. Encourage businesses to invest in improvements to the accessibility and design of their rear entrance areas.

3. Create welcoming, attractive, and safe rear entrances to businesses for customers arriving from the improved public alley/paseo and parking areas.

4. Enhance the visibility, legibility, and security of businesses' rear entrances.

5. Delineate and create unique identities for individual rear business façades and entrances.

6. Encourage signs and other rear building features that contribute to visually interesting alleys/paseos, enhance downtown's historic character, and reinforce the pedestrian environment, while also avoiding visual clutter.

(Above left) Existing rear entrances to businesses along the northwest quadrant of the 200 block of Chestnut Street (Highway 41) and site of future parking lot improvement. (Above right) Existing southeast parking lot accessed from the alley of the 200 block of Chestnut Street.

APPLICABILITY

» These guidelines were written with the properties and businesses on the Chestnut Street block, east side, between 2nd and 3rd Street in mind, in conjunction with the planned paseo and parking lot upgrades on this block. However, the design guidelines are intended to serve as a resource for all property owners and business tenants located throughout downtown Chaska.

» All property/building improvements are regulated by the City's Code of Ordinances, particularly the Zoning Ordinance (chapter 15) and the Building Ordinance (chapter 11).

» Within the Zoning Ordinance, property/building improvements will be required to meet regulations for signs, awnings/canopies, lighting, outdoor storage, fences, screening, landscaping.

» The Heritage Preservation Commission (HPC) has the authority to further regulate the architecture, signage, and modifications to designated historic buildings and any buildings within the designated Walnut Street Historic District to ensure that they are appropriate and in compliance with the City's Heritage Preservation Ordinance. Only a portion of the Chestnut Street Block between 2nd and 3rd Streets is designated as a National Historic District (NHD); a few of the buildings on the block are NHD Contributing properties or have Local Historic Designation.

» These design guidelines build upon and complement previous downtown guiding documents, including:

- *Downtown Master Plan*
- *Downtown Preservation Design Manual*
- *Downtown Signage Design Guidelines*

02. DESIGN GUIDELINES

ELEMENTS

The design guidelines on the following pages are organized by the following architectural and site elements:

- Doors and Windows
- Exterior Wall Materials, Awnings and Canopies
- Lighting
- Signage + Wayfinding
- Landscaping
- Private Outdoor Spaces

Birds-eye view rendering of design for new parking area and paseo with access to rear entrances of Chestnut Street businesses, located between 2nd and 3rd Streets in Downtown Chaska

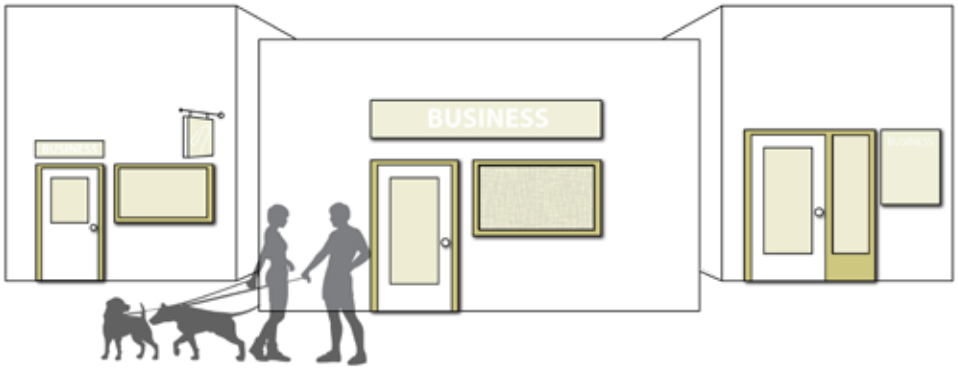

DOORS AND WINDOWS

1. Rear doors and windows are encouraged in order to provide "eyes on the alley/paseo", with the intention of heightening security for businesses and visitors.

2. Install commercial-style doors that have full or half-lights (full or half windows within the doors) to provide transparency and light to and from the building.

Example of half-light commercial doors. (Photo: Secur Door)

3. Rear door and window frame colors should contrast with and complement the exterior wall color. Consider using a brighter, more visible color for door and window frames.

4. Add commercial-grade windows to the rear of the building façade where appropriate to create more welcoming or transparent outward appearance. Consider how the window style maintains the architectural character of the building (avoid residential-style double or single-hung windows).

5. Consider energy efficiency (lower U-value for glazing, insulation in wall cavity surrounding door jamb, etc.) in window and door selection and assembly.

6. Rear garage/loading area doors should be decorative, complement other rear doors and windows, and provide some transparency where possible.

Commercial-grade windows and doors at business entrances in Rock Springs, WY. Windows and doors were retrofitted to complement the architecture of the historic building.

Windows and doors in this example demonstrate how contrasting colors and architectural elements can make the entrance visible and inviting. (Photo: John Lum Architecture)

7. Often the interior spaces accessed from the rear of the building are used for storage, utility, or restrooms. These areas require privacy or security. Windows into these spaces could be installed higher (clerestory) with a header height aligned with adjacent door heights. Alternatively, existing windows with lower sill heights could have a frosted or etched texture applied to provide privacy into the interior spaces. Avoid storage of materials or equipment directly in front of windows.

EXTERIOR WALL MATERIALS, AWNINGS & CANOPIES

1. Consider how materials and texture delineate the character of the building and reinforce the architectural style and era of the building. Brick or wood (or wood composite) siding wall materials are preferable for exterior walls, as they are tied to the historic era of Downtown Chaska and are typically found in 1-2 story commercial buildings from this era. Vinyl siding, EIFS (Exterior Insulation and Finish System) or synthetic stucco are less desirable as they are more typically used in residential or large-scale commercial settings.

2. Work with an architect or contractor who has experience working on similar building types (commercial, historic) to develop a design for the rear façade that is structurally sound and maintains the architectural integrity of the building.

3. Many of the rear building facades are one-story. Some architectural elements such as canopies and projecting signs are not appropriate for one-story facades, as there is not enough room to properly install and maintain a scale appropriate to the architecture.

4. Canopies, trellises, or awnings over doorways can signal a welcoming public entrance. These structures should be engineered and/or installed by professionals and be built using commercial-grade materials (avoid vinyl or residential-scaled items).

5. Consider how to contrast exterior colors with adjacent buildings to delineate different businesses.

6. Consider working with local artists to create colorful murals on larger exposed exterior walls to add vibrancy and character.

Recommended example of an awning with integrated business sign from the Downtown Chaska Signage Design Guidelines.

Facades in downtown Fargo, ND are painted in contrasting colors within a coordinating color palette. The contrasting colors help to clearly delineate each business and entrance. (Photo: Kevin Giunta)

Canopies over storefront entrances (Rue Cler, Paris)

The side facade of this commercial building was retrofitted with an attractive trellis structure to call attention to the business entrance. An outdoor patio and landscaping was also integrated into the design. (Photos: Arcollab)

Modern example of a canopy structure over back office entrance. (Photo: Chantal Fourie)

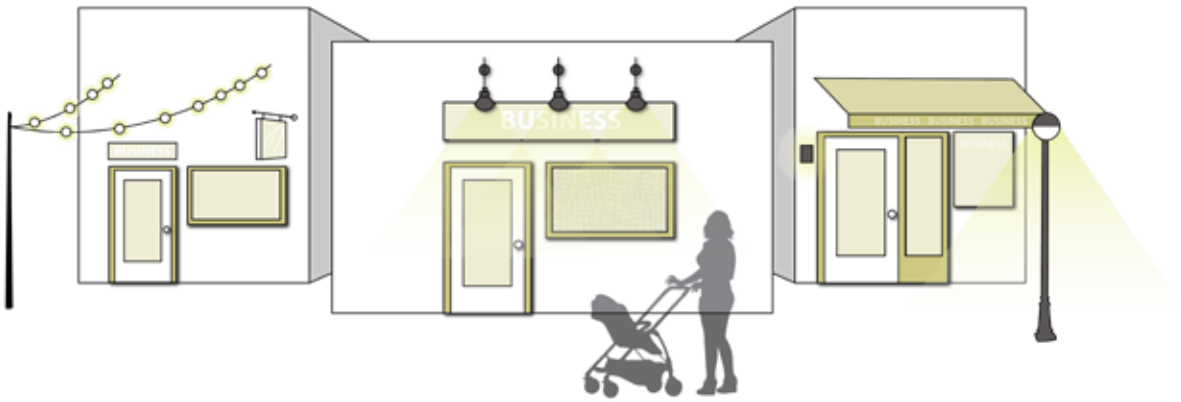

A variety of lighting types (free-standing pedestrian light and string lights) are employed in the Art Alley of East Lansing

LIGHTING

1. Lighting is regulated by Section 15.28.250 of the City's Zoning Ordinance

2. Wall-mounted lights at entrances can provide light without taking up space within drives or walkways.
   - *Wall-mounted down lights projecting onto a building sign are preferable.*
   - *Wall-mounted sconces alongside entrance doors are also preferable.*
   - *Fixtures should be designed so that the light source is not directly visible by pedestrians.*

3. Pedestrian-scaled pole fixtures can also be employed if there is enough room, or as part of a small seating/gathering area.

4. Sign lighting should be provided by an external light source that is directed at the sign. The light source should be shielded from pedestrian view. Reverse illuminated or halo effect channel letters are also appropriate for sign lighting. See pages 13-14 of the Downtown Chaska Signage Design Guidelines for sign lighting guidelines.

5. Dark sky fixtures are preferable to avoid light pollution.

6. Overhead string lights convey a welcoming or gathering atmosphere. Consider how they are installed (require two vertical surfaces) and always use exterior-rated lights for all fixtures.

7. Materials that correspond to the paseo design (wrought iron, dark-bronze metal finishes) are preferred for light fixtures.

8. Avoid flood lighting or lights that project upward. Focus on lighting walls, doors, or vertical surfaces. For visibility and security, pedestrian-scaled area lights are generally provided near public parking lots and along the paseo areas.

Wall-mounted fixtures are installed alongside doorways in the above example of a rear business entry.

Back-lit signs like the above example is an appropriate type of lighting if installed on a non-historic building in Downtown Chaska, per the Downtown Chaska Signage Design Guidelines.

Example of gooseneck fixtures illuminating an entrance sign at the rear of a building, along with string lights. (Collingswood, NJ)

Examples of string lights as a means to activate a side or rear entryway for businesses.

Example of signage that fits within the architectural elements of the building and references an historic style.

SIGNAGE + WAYFINDING

1. Signs are regulated by Section 15.32 of the City's Zoning Ordinance – Sign Regulations.

2. Wall-mounted signs are likely the most feasible and simple way to identify a business and rear entry to visitors from the alleys. See Downtown Chaska Signage Design Guidelines (pages 19-20) for wall sign design guidelines.

3. Professionally-installed lettering or arrows painted directly on to the exterior surface of the building can also work for rear signage. This should only be considered if the exterior surface is already painted. Avoid painting brick if it has not already been painted in the past.

4. The scale of signage should be appropriate for pedestrians.

5. Sign shapes should be relatively simple and compliment the architecture.

6. Preferable materials for signs include wood (stained or painted) or metal, and installed/assembled to be durable and easy to maintain.

7. Small projecting signs can be appropriate, if there is room to install them, and if they can be visible to visitors from the rear entrance. See Downtown Chaska Signage Design Guidelines (pages 17-18) for projecting sign design guidelines.

8. Where there is not enough room to install a visible wall-mounted or small projecting sign, consider how window signs could be utilized to communicate the entrance or business name. See pages 23-24 of Downtown Chaska Signage Design Guidelines for window sign design guidelines.

9. Multi-tenant buildings or wayfinding signs with directional arrows for individual businesses may be a good way to direct visitors from shared parking areas to business rear entrances. See pages 26-28 of Downtown Chaska Signage Design Guidelines for multi-tenant directory and wayfinding sign design guidelines.

10. Clearly delineate garage or delivery doors, parking areas, with visible signage that is also friendly. Avoid off-the-shelf 'no trespassing' or 'no parking' signs and instead integrate the message as professional hand-lettered painted signage that blends into the architectural style of the building.

Example of signage that meets the Downtown Chaska Signage Design Guidelines

Example of raised planters that separate parking areas from a pedestrian walkway.

LANDSCAPING

1. Plants in exterior planters or integrated into the landscape can help to soften the hardscape of an alley or parking area. They can also provide shade, habitat for urban wildlife, and serve to filter or absorb stormwater.

2. Parking lots can be very harsh locations for plants. Choose native perennials or native-cultivars that are hardy to Minnesota's climate (zone 4), salt-tolerant, and can withstand high temperatures during the summer. Low shrubs and hardy native grasses are generally better if seeking a low-maintenance landscape.

3. When selecting plants, consider how much sun is available for the planted area throughout the year or the day. Rear entrances on the north side of a building will likely be in the shade most of the time.

4. Edible garden plants can double as ornamental plants or signal to visitors that the business is food-oriented. Consider hardy, cold-tolerant plants (like kale) that can provide winter interest too. Avoid placement of edible plants directly adjacent to parked vehicles.

5. Window box planters are an option if there is limited space available. Consider how the design of the window box is integrated into the architecture of the building. Avoid vinyl, plastic, or residential-style (off-the shelf) window boxes.

6. Consider using raised planters for annuals and seasonal arrangements that can be moved inside during the winter.

7. Consider long-term maintenance of installed plants in the alley or near rear entrances. Is there a designated steward who is committed to maintaining the plants (watering, weeding, pruning)? If this is not possible, avoid fixed or permanent planters and start with smaller, movable planters.

8. Consider installing raised planter beds, seat walls, or other vertical elements that can delineate the pedestrian pathway while also providing a physical barrier between vehicles and pedestrians. Appropriate materials for fixed raised planters are brick, ceramic, wood, wood-composite, stone, metal or concrete. Avoid plastic, vinyl or residential-styled planters.

Perennial, native planting with permeable paving add color, texture, and delineate pedestrian walkways in this alley example.

Parking strips turned into raised beds for growing vegetables and herbs. (Erin Lau Design)

Planter beds create a defined gathering space in this alleyway.

Vegetation is used to soften the edges of this hardscape.

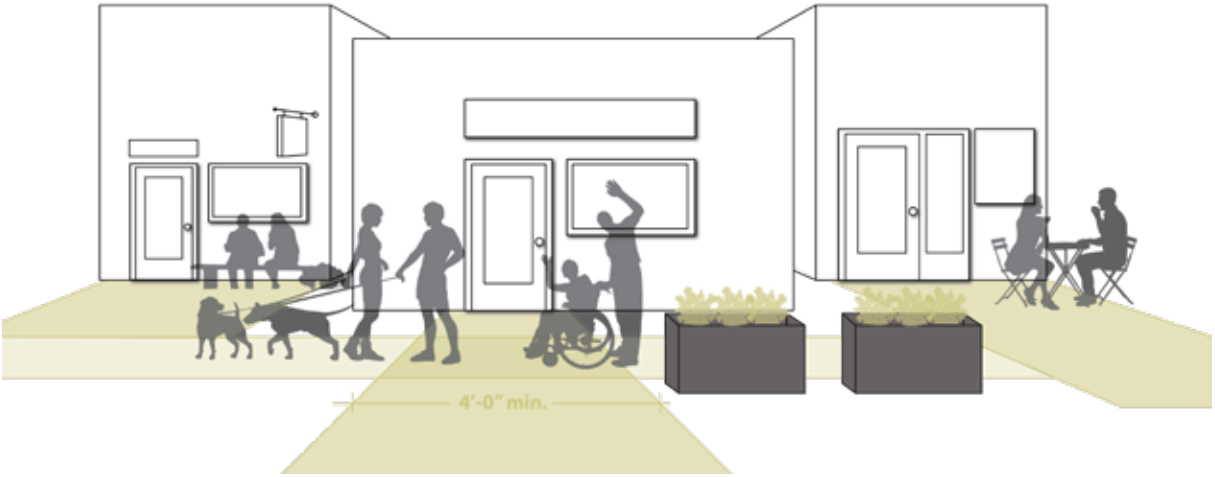

Cafe and bench seating at the rear entrance to a bakery in downtown Neenah, WI.

PRIVATE OUTDOOR SPACES

1. Maintain a clearly delineated 4'-0" wide pathway for pedestrians to reach the doorway from the rear of the building to the designated parking areas. If possible, provide a continuous concrete sidewalk connecting to other adjacent buildings, with consideration for ADA accessibility regarding slopes, clear areas, and surface finishes.

2. Pavers, imprinted concrete, or professionally applied paint on ground surfaces (concrete or asphalt) can also delineate a pedestrian entrance pathway.

3. If there is enough room at the rear of the building to provide a seating or gathering area, provide furnishings such as benches, tables and chairs, complement the building's architectural style, and do not encroach upon the pedestrian pathway. Site furniture should convey durability; materials such as wood, stone, and metal are good choices. Avoid plastic or residential-style outdoor furniture.

4. Outdoor trash/recycling receptacles should be stored behind screened areas. Stand alone or surface-mounted screening made of wood, wood-composite, stone, metal, or brick are appropriate materials for screening. Shared trash facilities are encouraged to reduce the amount of space and impact of trash/recycling receptacles on the private and public outdoor spaces.

5. Shade structures, such as canopies and umbrellas, cannot be affixed to public facilities, e.g. light poles.

Outdoor seating with screening element at the rear entrance to The Dressing Room, a restaurant in downtown Phoenix, AZ. (Photo: Lauren Potter)

Outdoor seating area at Crank Arm Brewing, in Raleigh, NC. (Photo: Bz3rk)

Outdoor seating, planting, lighting, and signage example in Sacramento, CA. (Old Soul Coffee, Dennis McCoy)

Metal screening with integrated vegetation and seating.

Various examples of wood slat structures to screen utilities, trash receptacles or to create a private space.

03. CITY PERMITS AND FUNDING

The following section is intended to provide guidance and resources for property and business owners to navigate various permit requirements within the City of Chaska, as well as to understand opportunities for funding assistance for improvements related to the design guidelines presented in this document.

BUILDING PERMITS (GENERAL)

Contact the City of Chaska Building Inspections for further information on fees, forms, and permitting for **General Building Permits**. Permits for projects that do not require plan review, such as residential permits for siding, roofing, window/door replacements, plumbing, mechanical and fireplace work, can be filed online. Commercial and residential permits that do require plan review do not have an online application at this time, but is forthcoming in the future. **All electrical work requires a separate request to be filed with the State Board of Electricity at or before commencement of any electrical wiring that is required by law to be inspected.**

For all information related to building permits, visit: ***https://www.chaskamn.gov/156/Permits-Fees***

SITE ALTERATION PERMITS

A Site Alteration Permit is only required for buildings that are designated as historic under either the local or national historic landmark designations, or are located within a historic district. A Site Alteration Permit shall be pulled for all proposed residential, commercial, industrial, and public buildings with historic designation. The Heritage Preservation Commission (HPC) shall hold a public hearing on each complete application for a Site Alteration Permit. The HPC may approve, approve with conditions, or deny an application. All findings and decisions of the HPC shall be final, subject to appeal to the City Council.

Site alteration work includes new construction, alterations or repair, including color and signage, or any other work that will affect the exterior appearance of a historic resource/building or a non-historic resource located in a historic district.

For more information related to a Site Alteration Permit, visit: ***https://www.chaskamn.gov/DocumentCenter/View/400/Site-Alteration-Permit?bidId***

SIGNAGE PERMITS

All new and altered signs require the business and property owner to submit a sign permit application to the City's Planning Department. Two types of sign applications are available: **Permanent Sign Permits and Temporary Sign Permits**. Permanent sign permits are for building signage, whereas, temporary sign permits are for signs that advertise special and temporary events.

For more information related to sign permits, visit: ***https://www.chaskamn.gov/165/Applications-Fees***

STOREFRONT IMPROVEMENT PROGRAM

The Storefront Improvement Program was created by the City of Chaska Economic Development Authority (EDA) to encourage restoration of downtown building facades and to strengthen the overall visible retail services within the downtown area. The EDA, with the assistance of SayHey5K, is offering two programs to assist with this goal:

MATCHING GRANT FOR SIGNS/ AWNINGS

The purpose of this grant is to support and encourage downtown businesses in the restoration of downtown building facades with signage and/or awnings that honor the historic nature of downtown while strengthening the visibility of retail services. The EDA, with funding support from the Downtown Chaska Special Services District, is offering matching grants of up to $2,500 for new signs and awnings to assist with this goal.

Any business that is located within Chaska's Downtown Special Services District is eligible to apply. Projects shall include improvements to the general appearance of a downtown building's exterior through new or restored signage and/or awnings.

Fore more information about the Matching Grant for Signs and Awnings, visit:

https://www.chaskamn.gov/DocumentCenter/View/2132/Matching-Grant-for-Signs-and-Awnings---Application?bidId

LOW-INTEREST LOANS AND ARCHITECTURAL GRANTS

The Storefront Improvement Program offers low-interest loans of up to $50,000 for larger storefront rehabilitation projects with a $500 architectural grant to assist with the plan.

Assistance is intended to encourage investment in downtown buildings that may not normally occur. More specifically, the program's objectives are to:

1. Restore the historic atmosphere of the downtown area;
2. Enhance the City's sene of community by creating a strong and visible retail service center in the downtown area;
3. Increase the pace of downtown development that would not normally occur unless the market produced such development; and
4. Keep businesses from relocated who would otherwise find it economically difficult to continue providing service in the downtown area without improvements to the exterior appearance of the building.

For more information about the Storefront Improvement Program's Low-Interest Loans and Grants, visit:

https://www.chaskamn.gov/DocumentCenter/View/413/Storefront-Loan-Program?bidId