AGENDA
CHASKA PLANNING COMMISSION
CHASKA CITY HALL - COUNCIL CHAMBERS & ZOOM
Wednesday, April 12, 2023
7:00 PM

1. Call to Order
2. Roll Call
3. Adopt Agenda
4. Visitor Presentation
5. Approve Previous Meeting Minutes
   - 5.A. Approve the February 8, 2023 Planning Commission Minutes
6. Consent Items
   - 6.A. Recommend Approval of the Final Plat for Oak Creek 2nd Addition/DR Horton/PC #2023-11
7. Action Items
   - 7.A. PUBLIC HEARING: Recommend Denial of the Variance to the Bavaria Road Setback at 1142 Rosemary Lane/Jimmy Son/PC #2023-09
   - 7.B. PUBLIC HEARING: Recommend Approval of the Preliminary Site & Building Plan, Preliminary Plat, Zoning Ordinance Amendment (ZOA) and Variance for Chaska Yards/Carver County CDA/PC #2023-01
   - 7.C. Recommend Approval of the Concept Plan for 3740 Chestnut Street/Audrius Asakenas/PC #2023-11
8. Other Business
   - 8.A. Receive Previous Meeting Minutes
     - 8.A.i. March 6, 2023 and March 20, 2023 City Council Meeting Minutes
9. Adjourn

CHASKA PLANNING COMMISSION
MINUTES
FEBRUARY 8, 2023

1. Call to Order
Chairperson Brass called the meeting to order at 7 pm.

2. Roll Call
Roll call was taken. Members present: Commissioners Aasen, Baswa, Campbell, Gaare, Kerber, Olson, Purdy, and Chairperson Brass.

Members absent: Commissioner Urbanski.

Also present: Nate Kabat, Community Development Director Liz Hanson, City Planner; and Jacob Saufley, City Attorney.

3. Adopt the Agenda
Motion by Commissioner Gaare, second by Commissioner Aasen, to adopt the agenda as presented.
Motion carried.

4. Visitor Presentation
No one appeared under Visitor Presentation.

5. Approve Previous Meeting Minutes
a. Approve the January 11, 2023 Planning Commission Meeting Minutes

Motion by Commissioner Olson, second by Commissioner Baswa, to approve the minutes of the January 11, 2023 Planning Commission meeting.
Motion carried.

6. Consent Agenda
Motion by Commissioner Gaare, second by Commissioner Aasen, to approve the Consent Agenda as follows:

a. Adopt Resolution Recommending Approval of Amended Legal Description for the Final Plat of the Hickory Addition.

Motion carried.

7. Action Items

a. PUBLIC HEARING: Recommend Approval of the Zoning Ordinance Amendment to Section 15.24 Shoreland Management/City of Chaska/PC #2023-07

City Planner Hanson presented to the Commission and noted that this item would go before the City Council on February 27, 2023.

Commissioner Aasen asked why the other lakes along Chaska Creek were not shown.

City Planner Hanson stated that she was not sure why they were not included, but noted that she believes when they need to be a certain size or type to be included.

Community Development Director Kabat explained that his understanding was that the lakes mentioned by Commissioner Aasen were extremely shallow and are more part of the Chaska east creek channel and did not rise to the level that they would be part of the DNR's classification system.

Commissioner Olson stated that, to him, this appears to be a formality with the DNR and will not have any impact on development or activity in the City.

Chairperson Brass opened the public hearing at 7:13 p.m. There being no public comment, he closed the public hearing.

Motion by Commissioner Baswa, second by Commissioner Gaare, to recommend to the City Council approval of the Zoning Ordinance Amendment that would modify Section 15.24 (Shoreland Management) of the Zoning Ordinance to read as the attached draft Ordinance.
Motion carried.

b. PUBLIC HEARING: Recommend Approval of the Preliminary Site and Building Plan, Preliminary Plat and Zoning Ordinance Amendment for the Ess Lot and Ernst Home (Chaska Yards)/Carver County CDA/PC #2023-01

City Planner Hanson presented the item to the Commission and noted that it was slated to come before the City Council on February 27, 2023.

Chair Brass asked if the plans were for 4 separate PIDs.

City Planner Hanson stated that it is more than likely that there would be 4 separate PIDs.

Chair Brass asked about the common area in the middle and if there would be like an outlot with access agreements for people to be able to access their units.

City Planner Hanson explained that the way it is being discussed right now is that the communal areas would be in an outlot that is owned by the CDA or land trust that will provide this access. She noted that there may be some areas where they will still need access easements.

Commissioner Olson asked about unit #2 and the spacing that will be there. He stated that it is hard to visualize it with the deck and the fence. He asked where the fence would be compared to the property line and the deck.

City Planner Hanson explained that the property line on the north side really goes up to the edge of the buildings. She stated that there will be 5 feet between the side property line and where unit #2 is proposed, and 3 feet between the property line and the fence.

Chairperson Brass opened the public hearing at 7:57 p.m.

Todd Grover, MacDonald and Mack Architects, stated that since they cannot put something taller to block the view of Von Hanson's trash, they may try to work in some additional landscaping in order to allow for some additional screening. He referenced the northern lot line and explained that the problem is that there is a transformer that serves the businesses to the north that was placed there. He stated that if there is a different way to handle this they are open to ideas that would still allow access to the transformer.

Commissioner Olson asked about the private yard for unit #1 and how it would be accessed.

Mr. Grover stated that there would be a fence with a gate that will allow them to access the yard. He explained that they would not be able to access it directly from the unit and would have to go outside and go through the gate. He stated that there may be a way to redesign the space so there is a sliding glass door that would be able to directly access that space.

Commissioner Olson encouraged Mr. Grover to get creative because this would be the only unit that would not have direct access to their front yard from inside their unit. He asked about unit #4 and if they had a private yard.

Mr. Grover explained that they will have a small front yard and will have a little back corner. He noted that the benefit that they have is that they have a much larger house than the other units.

Commissioner Olson asked about snow storage plans.

Mr. Grover stated that the plans are for behind unit #3 and explained that some of the talk right now is to be able to haul some of the snow off site or there may be some possibilities for along the edge of the Paseo and the back side of the fence. He stated that he suspects that the everyday snow storage will be able to managed on site and if there is a big snow event, it will need to be taken off site.

Commissioner Olson asked if the snow removal would be part of the outlot.

Mr. Grover stated that he believed that would be the case.

Chair Brass asked who would manage and take care of that task, for example, in 7 years.

Chuck Swanson, Carver County CDA, stated that the CDA would handle that and explained that they had looked at starting an association but felt that would not work with only 4 units.

Chair Brass asked about the plans for flat roofs and their ability to withstand snow storage.

Mr. Grover stated that they will be engineered to handle snow and noted that they are also planning solar panels.

Commissioner Olson asked whether unit #2 would end up with rear setbacks rather than side yard once they are divvied up.

City Planner Hanson stated that the way the zoning is arranged, it would not. She explained that that the north lot line would effectively be treated as the side lot line with a 5 foot setback.

Commissioner Olson stated that he loves the design and how this has progressed but has concerns that this is trying to put too much into a small space. He asked if there had been any neighborhood or community meetings for the last round of plans.

City Planner Hanson stated that there were not for the last round, but there had been at the front end with the concept plan.

There being no additional public comment, Chair Brass closed the public hearing at 8:11 p.m.

Chair Brass stated that he has some concerns about the fencing and would like to see a mixture of evergreens and deciduous trees. He stated that he also wanted to make sure that there were access agreements and suggested that they consider the possibility of various covenant restrictions for things like boat and trailer parking. He noted that, in general, he likes the whole development and thinks it is great that they are getting a historical building back in the City and that it will be lived in. He stated that the other units with affordable housing bring a nice community feel and thinks it will be a nice micro-development as long as all fire and safety issues have been addressed.

Motion by Olson, second by Aasen, to recommend to City Council approval of the Preliminary Site & Building Plan and Preliminary Plat for 4 housing units on the Ess Lot and Ernst Home (Chaska
Yards), subject to the following conditions:

1. Approvals shall be based on the following graphic exhibits:
   a. Narrative (pgs 1-7), prepared by MacDonald & Mack, dated January 18, 2023
   b. Aerial Exhibit, prepared by MacDonald & Mack, dated January 18, 2023
   c. Existing Conditions, prepared by MacDonald & Mack, dated January 18, 2023
   d. Site Plan, prepared by MacDonald & Mack, dated January 18, 2023
   e. Landscape Plan, prepared by MacDonald & Mack, dated January 18, 2023
   f. Overlay Plan, prepared by MacDonald & Mack, dated January 18, 2023
   g. Photometric Plan, prepared by Pulse, dated December 20, 2022
   h. Selective Site Demolition and Erosion Control Plan, prepared by MacDonald & Mack, dated December 2, 2022
   i. Grading, Drainage and Erosion Control Plan, prepared by MacDonald & Mack, dated December 2, 2022
   j. Utility Plan, prepared by MacDonald & Mack, dated December 2, 2022
   k. Paving and Geometric Plan, prepared by MacDonald & Mack, dated December 2, 2022

l. Turning Movement Analysis, prepared by MacDonald & Mack, dated December 2, 2022
m. Civil Details (pgs 1-3), prepared by MacDonald & Mack, dated December 2, 2022
n. Storm Water Plan, prepared by MacDonald & Mack, dated December 2, 2022
o. Chaska Yards – Unit Elevations, prepared by MacDonald & Mack
p. Ernst House – Building Elevations, prepared by MacDonald & Mack
q. Chaska Yards – Concept Renderings (pgs 1-23), prepared by MacDonald & Mack, dated January 18, 2023

2. Adherence with the City Engineers Memo dated February 8, 2023.
3. Adherence with the SHPO letter dated April 11, 2022.
4. Provision of 360-degree architecture be provided on the west and south facades of the detached garage by way of landscaping or architectural details.
5. Provision that mechanical equipment will be fully screened from view.
6. Provision of decorative garage doors to be used on the detached garage.
7. Provision of an approved Site Alteration Permit by the HPC for the Ernst Home and Ess Lot (Chaska Yards) prior to final submittal.
8. Compliance with applicable zoning requirements, in particular Chapter 15.28 (Special Regulations).
9. Provision that building code is adhered to for all buildings.
10. Provision to explore lighter color option for the new housing units, and to be addressed at final submittal.
11. Provision that any existing boulevard trees damaged or removed from this project be replaced prior to issuance of a Certificate of Occupancy.
12. Provision that fence height does not exceed 4 feet and to obtain a fence permit prior to installation.
13. Provision of continued coordination between the applicant and City regarding the project edge and paseo edge matching up adequately.

Motion carried.

Motion by Baswa, second by Purdy, to recommend approval of the Zoning Ordinance Amendment to PRD-74.

Motion carried.

<u>8. Other Business</u>

a. Recommend Appointment of Chair and Vice-Chair of the Planning Commission

City Planner Hanson presented the item to the Commission.

Community Development Director Kabat explained that on an annual basis, the City Council appoints Chair and Vice-Chair for the Planning Commission. He stated that by practice, they like to take action based on recommendations put forth by the Planning Commission itself. He noted for the last calendar year, Commissioner Brass served as Chair and former Commissioner Lacey served as Vice-Chair.

The Commission discussed various nominations.

Motion by Commissioner Aasen, second by Commissioner Purdy, to recommend to the City Council Appoint Rob Brass to serve as Chair and Todd Urbanski to serve as Vice-Chair.
Motion carried.

9. Receive Other Meeting Minutes

a. Receive the December 19, 2022 and January 9, 2023 City Council Meeting Minutes
b. Receive the December 9, 2022 EDA Meeting Minutes

Chair Brass suggested that because there are new faces on the Commission that they each introduce themselves.

The Commissioners introduced themselves and shared information about their background and experience.

10. Adjourn
Motion by Commissioner Aasen, second by Commissioner Olson, to adjourn the meeting at 8:30 pm.
Motion carried.

REQUEST FOR ACTION
CHASKA PLANNING COMMISSION
04/12/2023

Subject: **Oak Creek 2nd Addition – Final Plat**

Applicant: DR Horton

Location: North of Engler Boulevard/Co Rd 10, west of Clover Preserve Drive

Case No.: 2023-11

Synopsis: Applicant seeks to obtain approval of a final plat for 45 lots

Prepared By: Elizabeth Hanson

Staff Recommendation: Motion to recommend approval

BACKGROUND

At its May 15, 2000 City Council meeting the Clover Ridge Concept Plan was approved. The Concept Plan showcased an assortment of housing and densities throughout the development, which included the portion of Kelzer's site that is being looked at tonight.

In July of 2002 the Final Plat for Clover Preserve 2nd Addition was approved, which encompassed the lots on Sophia Drive and a street stub that ended at the Chaska-Laketown Township border. Several signs were put along the edge of Sophia Drive and Kelzer's land to inform residents that the area will be developing.

In May 2018 the concept plan for Sagewood was approved, which encompassed the 1st and 2nd additions. The 1st and 2nd additions were the extension and termination of Clover Field Circle, and the extension of Clover Preserve Lane up to the western border of Chaska abutting the former jurisdiction of Laketown Township. The Final Plat for Sagewood was approved in October 2018, and the final plat for Sagewood 2nd was approved in April 2019.

In May 2020, the original concept plan for Sagewood 3rd was approved that showed the westerly extension of Clover Preserve Lane and Sophia Drive into the former orderly annexation area of Laketown Township. 83 lots on approximately 42 acres were shown in this concept plan. Concerns were raised regarding development access, traffic, tree preservation, and school capacity. The developer was specifically asked to explore more development access opportunities. A copy of the May 2020 Concept Plan is shown on the next page.

May 2020 Concept Plan

In December 2021, a revised concept plan of Oak Creek (fka Sagewood 3rd addition) was approved, which included a 107-lot development on 52 acres of land, plus the inclusion of a 162-unit apartment building (Gallery Apartments, fka Clover Field Apartments) on Clover Ridge Drive. Oak Creek was approved as a single-family development on both the Kelzer property and a portion of the Chaska Investment property. The apartments were proposed entirely on the Chaska Investment property. A new road extension was also shown to connect into Clover Ridge Drive across from Romeo Court that would provide an additional means of ingress/egress out of the single-family development, which was reactionary to the comments received during the May 2020 review. The December 2021 Concept Plan showed both projects reviewed together so that the property owners/developers could get an understanding of how a road extension could fit into the context of the future multi-family site where Gallery Apartments was proposed.

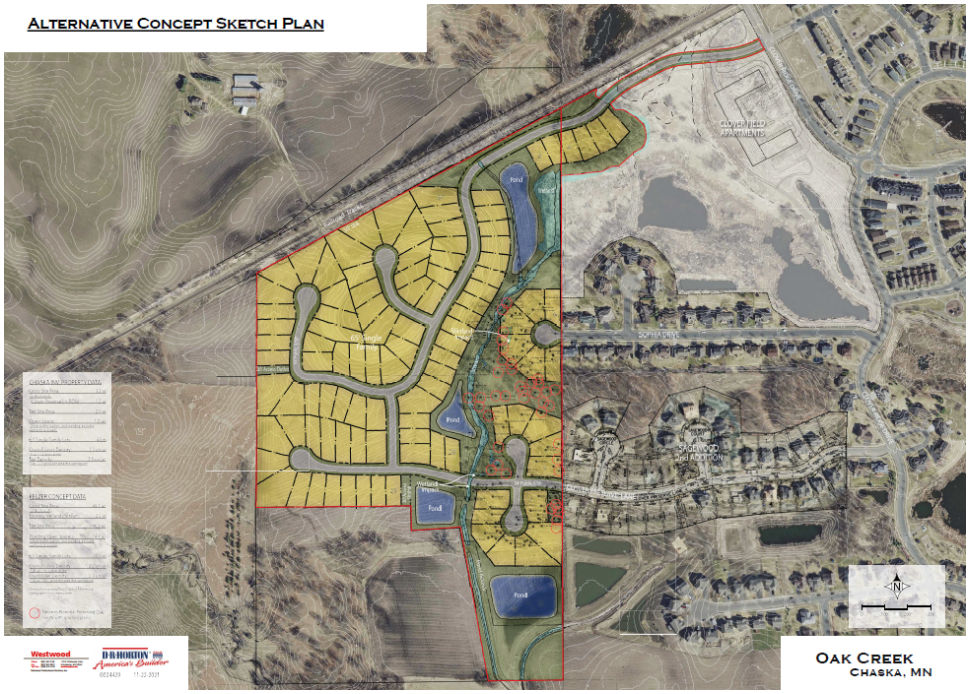

December 2021 Concept Plan

In April 2022, the preliminary plat and rezoning were approved for Oak Creek. The preliminary plan showed a proposal for 102 single-family lots on approximately 52 acres.

April 2022 Preliminary Plan

Because the Kelzer property was located in the former orderly annexation area of Laketown Township, it was required that this property be annexed into Chaska prior to preliminary plans being approved. The property was annexed in March 2022.

In June 2022, the Final Plat for Oak Creek 1st Addition was approved. This plat showed the inclusion of 57 lots. Tonight, we are reviewing the second and final phase for the development (45 lots).

CHANGES SINCE APRIL 2022 PRELIMINARY PLAN

The below changes have occurred since the April 2022 preliminary approvals. These changes were reflected in the first addition's final plat of Oak Creek and are reflected in the second addition proposed this evening.

- Tree Preservation; a site visit with the developer and City Staff (including the City's certified arborists) occurred on May 24, 2022 to evaluate saving more trees. 8 additional trees above the April 2022 preliminary plan were identified to be preserved; 3 that were revised on the plans prior to the site visit and 5 more that were revised after the site visit. The final plan is showing preservation of those 8 additional trees (mostly oaks). These additional trees are mainly situated in the rear yards of the lots and the areas in the outlots (see below in green).

In addition, City staff did identify 5 trees within the preservation areas that were deemed harzardous to the development. It was recommended that these trees be removed as they will be a danger to the area in the near future (see above in orange). These trees were either dead or had large burrows in them that deemed a potential fall hazard. It is typical for the City to evaluate trees within a development (typically after development grading occurs) to look for potential hazards. The City had an earlier look this time and noted such hazards.

- Jonathan & Homeowners Assocation; the developer and Jonathan have concluded that the development will be a part of the Jonathan Association.
- Added Pedestrian Connections; the developer has added a sidewalk to the north side of Oak Creek Drive up to Clover Ridge Drive. In addition, they have added a sidewalk on the north cul de sac of Oak Creek Circles that will provide a continuous connection from the trail along the park space and the trail to connect to Sophia Drive. The City, Jonathan Association and developer have revisited the potential in adding a pedestrian connection across the creek to connect Sophia Drive with the west side of the development. At this time there is not a pedestrian connection shown, for the reasons that the Jonathan Association feels there are already adequate connections existing and proposed as they will be the ultimate owners of such within Oak Creek. The cost of the bridge both for installation and future maintenance also does not outweight the benefit of gaining that connection. The City would still encourage that the connection be preserved within the development, so that if in the future if a connection is warranted by the Jonathan Association then there is space to do so. The developer and Jonathan

would have to come to an agreement on whether or not that is something they wish to pursue.

Neighborhood Meeting November 18, 2021:
DR Horton and Chaska Investments conducted a neighborhood meeting for their concept plan on November 18, 2021. In sum, there were concerns on traffic, access, and building height for the apartments.

Project Goals
The goals of the Oak Creek project include the following:

- Providing a seamless transition of road and pedestrian connections
- Housing design and lot sizes that will complement the existing 2-story homes on larger lots
- Creating a neighborhood layout that is sensitive to the existing conditions, including availability of utilities, natural grades and drainage patterns
- Preservation of trees and buffer to existing homes.
- Enhancement of a small community feel

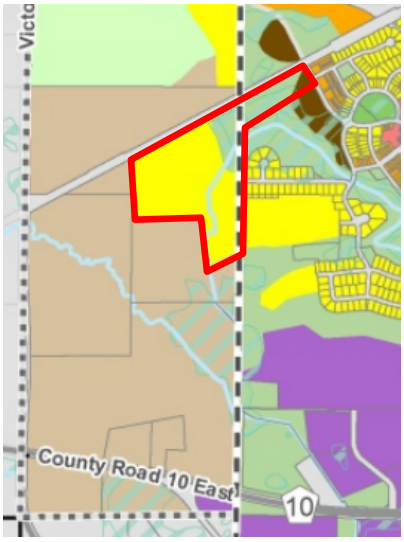

Excerpt from 2040 Land Use Plan

Comprehensive Plan & Clover Ridge Concept Plan
The Comprehensive Plan guides these areas to be Low Density Residential. The proposal tonight is consistent with this guidance. The Clover Ridge concept plan also guided this area to be standard lot residential, which the proposal is consistent with.

<u>CURRENT PROPOSAL</u>
Final Plat is being requested for the Oak Creek 2nd Addition project, which will be the second and final phase of 45 lots. The first phase totaled 57-lots (overall total of 102 lots). The Oak Creek proposal is located north of Engler Boulevard/County Road 10 and west of Clover Preserve Drive and Sophia Drive. This area is now considered to be a part of Chaska and no longer in the orderly annexation area of Laketown Township as of March 2022.

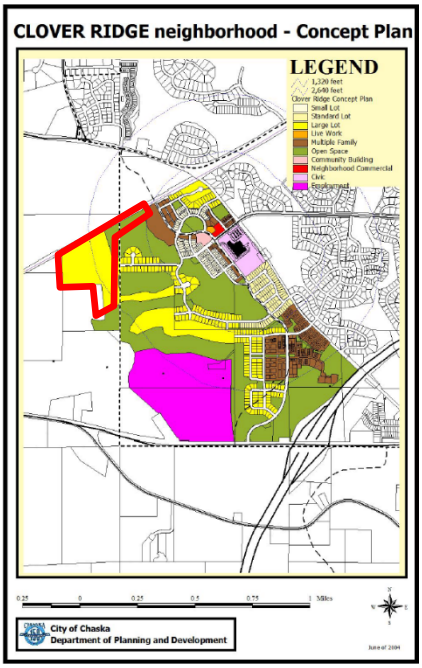

The 45 lots of the second phase encompass the northwesterly lots along Oak Creek Drive and Oak Creek Pass and the cul de sac off of Sophia Drive.

Adjacent properties
The site is bound on the north by the Twin Cities & Western railway and Steve Kelzer's farm property; to the west by Victoria Drive (CR 11), the Brose family farm and the remaining portion of Kelzer's land; the south by Kelzer's farmland, land owned by Cal Haasken, and the homes on

Sophia Drive; the east by residential in Clover Ridge and Sagewood.

Existing Conditions
The nearly 50-acre site is located to the west of the Sagewood and Clover Preserve neighborhoods and south of the Twin Cities & Western Railroad line. The site was formerly used for agricultural purposes. The site naturally drains to the creek located along the west side of the side and ultimately off-site to the south.

The southerly portion of the Kelzer Property contains an area of trees. A tree survey indicates approximately 216 trees of varying sizes and species that are evenly distributed throughout. The majority is Oak. The remaining species include a combination of Cedar, Basswood, Ash and Elm among a few others. The average size of these trees are averaging around 20-35 inches in caliper. There is also a 'Heritage Tree' noted on the southwest corner of the site outside of the development area. This tree has been noted as one of the oldest trees in the community, and plans to remain.

Poor soils were noted on the southerly most tip of the subject site. Because of this the developer will be using this area for ponding.

A Notice of Determination of wetlands on the Kelzer Property was received November 2019 and it was determined that there are 10 wetlands on the site. The wetlands range in size from 158 sq. ft. to 21,953 sq. ft. A small creek also transverses the site from north to south. A Notice of Determination of wetlands for the access area on the Chaska Investment Property was received November 2020. This site contains a large wetland complex with various upland areas. Impacts to the wetlands are due to the new access road, Oak Creek Drive.

Land Use
The proposed Oak Creek 2nd Addition final plat consists of 45 single family lots with a typical lot size of 65 feet wide by 140 feet deep. Minimum setbacks are proposed to be consistent with those approved for Clover Preserve and Sagewood: front setback of 26 feet, side setback of 5 feet, corner lot side setback of 26 feet and rear yard setback of 20 feet.

The parcels of land that the Oak Creek project encompasses is currently zoned Planned Residential Development (PRD-85).

Layout
The overall neighborhood will be accessed from a new road, called Oak Creek Drive by the intersection of Clover Ridge Drive and Romeo Court. Clover Preserve Lane will be extended up to the creek and include 13 homesites. Sophia Drive will be constructed with a cul de sac and include 5 homesites. Trails will be constructed at the ends of both Clover Preserve Lane and Sophia to provide pedestrian connectivity.

A private neighborhood park is planned for the site in a location that is west of the creek. Park amenities will include a play structure and seating. This will be owned by the Jonathan Association

Transportation/ROW/Construction Traffic

The plan proposes to provide for a network of internal residential roadways with connectivity to arterial roadways. Specifically, Sophia Drive is extended to the west to provide access to a cul de sac of 5 lots. In addition, a new development access is proposed from Clover Ridge Drive, parallel with the railroad, that will connect into the internal road system of Oak Creek now known as Oak Creek Drive. Oak Creek Pass will extend off Oak Creek Drive and terminate in a cul de sac on the northwest portion of the site.

The current plan appears to show road right-of-way widths (54 feet) that are consistent with the designs in the existing Clover Ridge and Sagewood developments, which is smaller than the City's typical 60 foot wide ROWs. City crews have evaluated this change in the 1st and 2nd additions of Sagewood and have determined that the 54 foot wide ROW is acceptable to carry through and provide more of a seamless approach to the existing neighborhoods.

A traffic study has been completed for this development. The traffic study found that Schoolmaster Drive currently operates near the maximum trips per day for a Local Street as classified in the City's Comprehensive Plan and by the Metropolitan Council. In response to access and traffic, Oak Creek is being proposed with one access, Oak Creek Drive. The new access road connects to Clover Ridge Drive, which is classified as a collector road. The goal in creating the northerly connection is to encourage traffic to use the collector road system within the surrounding neighborhood and reduce the impact on the local streets.

Construction access will enter and exit from Pioneer Trail to the north. Construction traffic will be precluded from going south on Clover Ridge Drive per the developer's construction access plan. The developer will have to continue working with the existing neighbors on Sophia Drive and Clover Preserve Lane about how construction traffic will use these roadways for the homes proposed on these roadways.

Utilities
Sewer and water utilities are available. Water and sewer are stubbed to each access point on the east. The site's layout is influenced by the extension of these utilities. A sanitary sewer lift station will be needed to serve this site. The final location of the lift station is planned to be on the west edge of the tot lot.

Stormwater
Stormwater ponding is proposed as a part of the development on the south side of the site, center of the site just west of the creek, and north of the site. It will be required that the developer provides adequate maintenance access into these areas. Stormwater ponding will have to meet all Carver County WMO and City standards.

Setbacks
The setbacks will be consistent with Sagewood 1st and 2nd. Namely, the front yard setback should be no less than 26 feet. The rear yard setback should be 20 feet. The side yard setback should be 5 feet. Corner lots should have a side yard setback of 26 feet.

In addition to these setbacks, there are other setbacks that may apply to this site. See below:

SETBACKS	
Direction	**Setback**

Wetlands	30 feet
Railway	50 feet

Architecture
DR Horton will be the sole builder in this development. The proposed homes will be 2-story single family designs, which are like those in the current Sagewood neighborhood. DR Horton anticipates offering approximately 7 floor plans ranging in size from 1,900 to 3,400 square feet. Each floor plan will have multiple elevation options, which will create variety throughout. Pricing will also be similar to homes in Sagewood, starting in the lower to mid $500,000s. A sample of the home designs accompany this application.

City ordinance dictates that housing may not be similar within two houses to each side, directly across the street or diagonal from the house in question. This ordinance has been very successful in the recent past with the result of neighborhoods with varied housing design and architecture.

The following lots are subject to 360 degree architecture per the final plat drawing of Oak Creek 2nd Addition:

- Lot 4, Block 1
- Lots 1, 4, 5 and 8, Block 3

Trails & Sidewalks
There are no public trails proposed as a part of this development nor are there trails called out for this area in the Comprehensive Plan. Because of this the developer will be required to pay trail fees, which will be wrapped into the Developer's Agreement. There will be a couple private trail sections included within the development; one that will connect the lots on Clover Preserve Lane to the lots to the west; and one trail that will connect the lots on Clover Preserve Lane to the Sophia Drive. The trail connection between Sophia Drive and Clover Preserve Lane is the developer's intent to meet the City's comment regarding providing a faster pedestrian connection for the westerly Oak Creek lots to access Clover Ridge Elementary. This option was explored as being the least impactful in terms of a crossing and preserving trees. Staff would still argue that the most direct and functional connection would be a bridge crossing between the Sophia Drive cul de sac and the westerly Oak Creek lots across the creek. As noted above, there is not a pedestrian connection shown for the reasons that the Jonathan Association feels there are already adequate connections existing and proposed. The City would still encourage that the connection be preserved within the development, so that if in the future if a connection is warranted by the Jonathan Association then there is space to do so. There is currently space in the outlot between Lot 2, Block 4 and Lot 1, Block 5 that could hold a future connection, if it's pursued. The developer and Jonathan would have to come to an agreement on whether or not that is something they wish to pursue.

The plan is proposing to include sidewalks. The developer will be required to provide sidewalks on both sides of the streets up to the bulbs of cul de sacs per City policy. A sidewalk connection is proposed for the full length of the south side of Oak Creek Drive out to Clover Ridge Drive. The sidewalk will ultimately turn into the regional trail once it hits the apartment site. The north side of this street is also showing a sidewalk. If the bridge crossing between

Sophia Drive and the westerly Oak Creek lots can be achieved as noted above, then the sidewalk on the north side of Oak Creek Drive could be eliminated.

Screening, Landscaping & Tree Preservation

Because this development abuts the Twin Cities and Western railway on its northern edge it will be important that the homes that back up to this use have adequate screening. Typically a mix of deciduous and coniferous trees with a level of berming is the best practice adjacent to railways. The applicant has shown in their plans that a mix of berming in some sections and mainly coniferous trees will be installed along this edge. In addition they are incorporating a 6 foot privacy fence along the residential edge.

Trees will be required in the boulevard in order to meet the City's Boulevard Tree Policy. It should be noted that the boulevard is the area between the sidewalk and the street.

Tree Preservation is an important piece of this development, specifically in the southeast area where significant trees are present. The applicant has conducted a tree survey. As noted previously, there are 216 trees surveyed which are mainly oak trees ranging from 20-35 inches in caliper. 106 of the trees surveyed will be preserved, which totals 2,468 caliper inches; 110 removed, which totals 2,142 caliper inches. Between the Concept Plan in 2021 and the Preliminary Plan in April 2022 the developer saved 12 more trees on their preservation plan. From preliminary plan to now the developer has included 8 more trees to be saved on their preservation plan.

In addition, City staff did identify 5 trees within the preservation areas that were deemed hazardous to the development. It was recommended that these trees be removed as they will be a danger to the area in the near future (see above in orange). These trees were either dead or had large burrows in them that deemed a potential fall hazard. It is typical for the City to evaluate trees within a development (typically after development grading occurs) to look for potential hazards. The City had an earlier look this time and noted such hazards. The City will have an additional look once grading occurs so that the area is safe for everyone.

As with Sagewood 1st and 2nd additions, the tree preservation areas are proposed to be in an outlot containing a Conservation Easement and owned by the homeowners' association. There are other trees that sprinkle the yards of some of the lots that will also be preserved and incorporated into an easement area.

It should be noted that there is a cottonwood tree on the southwest tip of the subject site that has been deemed as one of the City's oldest cottonwood trees; it is pictured in the image on this page and is located just south outside the project limits. The developer has stated that this tree is not incorporated into the development and will remain preserved.

Private Amenity Area
A private neighborhood amenity area is planned for the site in a central location on the west side of the creek. Private amenities will include a play structure and seating.

Although this plan is proposing their own amenities, it will still be required of the developer to pay park dedication fees since the area proposed will be private.

Jonathan Association
During the reviews of Sagewood 1st and 2nd additions it was discussed whether or not Sagewood would be incorporated into the Jonathan Association, which is a Homeowners Association that encompasses the area over Clover Ridge. At that time the developer had the choice of either opting to be in the Association or create their own and provide their own private amenity area. The developer opted for their own private amenity area and the creation of their own Homeowners Association. As this new extension from the Sagewood development is mostly in the former orderly annexation area of Laketown Township, it is not required to be a part of the Jonathan Association by location. However, the developer and Jonathan Association have concluded that Oak Creek will be a part of Jonathan. With that said, Jonathan will be the owners/maintainers of the tree preservation areas, trails, park area, boulevard trees and signage.

Annexation
The subject site was formerly located in the orderly annexation area of Laketown Township. This orderly annexation area was put in place in the 1980's to have zoning control over the areas that will be added to the City of Chaska in the future. The developer and City have completed the annexation process as of March 2022 and the area is now a part of the City of Chaska.

Development Costs (Infrastructure Improvements)
The City of Chaska has a number of area-wide development cost such as, but not limited to:

- Storm Sewer
- Trails
- Parks

Prior to final platting, the developer will need to work with City Staff to determine which of these are applicable and what those fees will be.

Final Plat
The site will be platted into 45 lots for the development site. There are no outlots proposed with this phase.

Deadline for Agency Action
The City of Chaska received the complete application for this request on March 22, 2023. Pursuant to Minnesota State Statutes the City must act on this request by **Sunday, May 21, 2023 (60 days)**, unless the City provides the petitioner with written reasons for an additional 60-day review period. The additional review period would extend to Thursday, July 20, 2023. The City may with the petitioner's consent extend the review period beyond the Thursday, July 20, 2023 date. Lastly, if the City denies the petitioners request "… it must state in writing the reasons for the denial at the time it denies the request."

PLANNING COMMISSION ACTION REQUESTED:

Motion to recommend to City Council approval of the Final Plat for 45 lots for Oak Creek 2nd Addition, subject to the following conditions:

1. **Approvals shall be based on the following graphic exhibits:**
    a. **Final Plat (pgs 1-3), prepared by Westwood**
    b. **Cover, prepared by Westwood, dated February 7, 2023**
    c. **Overall, prepared by Westwood, dated February 7, 2023**
    d. **Sanitary Sewer and Watermain Construction Plan (pgs 3-5), prepared by Westwood, dated February 7, 2023**
    e. **Storm Sewer and Street Construction (pgs 6-8), prepared by Westwood, dated February 7, 2023**
    f. **Storm Sewer Construction Plan (pg 9), prepared by Westwood, dated February 7, 2023**
    g. **Intersection Details (pgs 10-11), prepared by Westwood, dated February 7, 2023**
    h. **Typical Street Sections (pg 12), prepared by Westwood, dated February 7, 2023**
    i. **Details (pgs 13-20), prepared by Westwood, dated February 7, 2023**
    j. **Overall Tree Preservation Plan, prepared by Westwood, dated September 19, 2022**
    k. **Tree Preservation Plan (pgs 16-18), prepared by Westwood, dated September 19, 2022**
    l. **Tree Preservation Plan & Data, prepared by Westwood, dated September 19, 2022**
    m. **Cover, prepared by Westwood, dated June 21, 2022**
    n. **Overall Landscape Plan, prepared by Westwood, dated June 21, 2022**
    o. **Landscape Plan (pgs 3-5), prepared by Westwood, dated June 21, 2022**
    p. **Landscape Plan – Notes – Details, prepared by Westwood, dated June 21, 2022**
    q. **Landscape Details, prepared by Westwood, dated June 21, 2022**
2. **Adherence with the Engineer's memo dated April 12, 2023.**
3. **Adherence to the City's Boulevard Tree Policy and local street section design.**
4. **Provision that boulevard trees are placed between the sidewalk and street.**
5. **Provision that boulevard trees are placed throughout the entire boulevard, including corner lot areas, to meet the Tree Policy.**
6. **Provision of sidewalks on both sides of all local streets.**
7. **Adherence to the following building setbacks for Oak Creek 2nd Addition:**
    a. **Front (house): 26 feet**
    b. **Front (unenclosed porch): 20 feet**
    c. **Rear: 20 feet**
    d. **Side: 5 feet**
    e. **Side (corner): 26 feet**
8. **Prior to final plat approval, developer shall enter into an agreement with the City for the provision of necessary infrastructure and associated development costs, including parkland fees.**
9. **Compliance with the City's anti-monotony and design requirements zoning ordinance (Section 15.28.290) for Oak Creek.**
10. **Provision to be setback 30 feet from edge of wetlands.**
11. **Provision of developer responsibility to remove any hazardous trees or limbs on site as determined by the Public Works Director, prior to issuance of a building permit.**
12. **Provision of a conservation easement in favor of the HOA be completed for all preserved trees.**
13. **Provision of a storm water management plan meeting City and Carver County WMO standards.**
14. **Provision that section 15.28 Special Regulations are complied with.**
15. **The following lots were subject to 360 degree architecture per the final plat drawing:**

a. **Lot 4, Block 1**
b. **Lots 1, 4, 5 and 8, Block 3**

City of Chaska
Memorandum

To: **Planning Commission**
From: **Alex Mollenkamp, Assistant City Engineer**
on behalf of Matt Clark, City Engineer
Date: **April 12, 2023**
Subject: **Oak Creek - 2nd Addition Final Plat**

The 2nd Addition of Oak Creek proposes a consistent development layout that was approved with the preliminary plat. The development will install extensions of sewer and water utilities to service the proposed lots. Development access for the majority of the site will be off Clover Ridge Drive via the newly constructed Oak Creek Drive and, for the Sophia Drive cul de sac, off of Sophia Drive. The city will work with the developer to provide notice and communication to the existing property owners along Sophia Drive as necessary through construction.

City stormwater standards shall be met and a permit from the watershed agency is required prior to grading occurring on the site. The final construction documents will need to be consistent with all City standards and policies. Prior to final plat approval, the Developer is required to enter into an agreement with the City for provisions of necessary infrastructure, associated costs, and City fees.

OAK CREEK 2ND ADDITION

PLAT FILE NO.
C.R. DOC. NO.

KNOW ALL PERSONS BY THESE PRESENTS: *That D.R. Horton, Inc. - Minnesota, a Delaware corporation owner of the following described property situated in the County of Carver, State of Minnesota, to wit:*

Outlot C and Outlot K, OAK CREEK, according to the recorded plat thereof, Carver County, Minnesota

Have caused the same to be surveyed and platted as ***OAK CREEK 2ND ADDITION*** *and do hereby donate and dedicate to the public for public use forever the public ways and also dedicates the easements as shown on this plat for drainage and utility purposes only.*

In witness whereof said D.R. Horton, Inc. - Minnesota, a Delaware corporation, has caused these presents to be signed by its proper officer this _____ day of _____ 20_____.

D.R. HORTON, INC. - MINNESOTA

By _____

Its _____

STATE OF MINNESOTA
COUNTY OF _____
The foregoing instrument was acknowledged before me this ____ day of _____, 20____, by _____ its _____ of D.R. Horton, Inc. - Minnesota, a Delaware corporation, on behalf of the corporation.

_____ (Signature) _____ (Name Printed)

Notary Public, _____ *County, Minnesota*

My Commission Expires _____

I, Chris Ambourn, do hereby certify that this plat was prepared by me or under my direct supervision; that I am a duly Licensed Land Surveyor in the State of Minnesota; that this plat is a correct representation of the boundary survey; that all mathematical data and labels are correctly designated on this plat; that all monuments depicted on this plat have been, or will be correctly set within one year; that all water boundaries and wet lands, as defined in Minnesota Statutes, Section 505.01, Subd. 3, as of the date of this certificate are shown and labeled on this plat; and all public ways are shown and labeled on this plat.

Dated this _____ day of _____, 20_____.

_____
Chris Ambourn, Licensed Land Surveyor
Minnesota License No. 43055

STATE OF MINNESOTA
COUNTY OF _____
This instrument was acknowledged before me on _____ *by Chris Ambourn.*

_____ (Signature) _____ (Name Printed)

Notary Public, _____ *County, Minnesota*

My Commission Expires _____

CITY COUNCIL, CITY OF CHASKA, MINNESOTA
This plat of ***OAK CREEK 2ND ADDITION*** *was approved and accepted by the City Council of the City of Chaska, Minnesota at a regular meeting thereof held this _____ day of _____, 20_____, and said plat is in compliance with the provisions of Minnesota Statutes, Section 505.03, Subd. 2.*

City Council, City of Chaska, Minnesota

By: _____ *Mayor* *By:* _____ *Clerk*

COUNTY SURVEYOR, Carver County, Minnesota
Pursuant to Chapter 395, Minnesota Laws of 1971, this plat has been approved this _____ day of _____, 20_____.

_____
Brian Praske, County Surveyor

COUNTY AUDITOR, Carver County, Minnesota
I hereby certify that taxes payable in 20_____ and prior years have been paid for land described on this plat. Dated this _____ day of _____, 20_____.

Crystal Campos, County Auditor

By: _____

COUNTY RECORDER, Carver County, Minnesota
I hereby certify that this plat of ***OAK CREEK 2ND ADDITION*** *was filed this _____ day of _____, 20_____, at _____ o'clock ____.M., as Document No. _____.*

Kaaren Lewis, County Recorder

By: _____

Westwood
Professional Services, Inc.

OAK CREEK 2ND ADDITION

PLAT FILE NO.
C.R. DOC. NO.

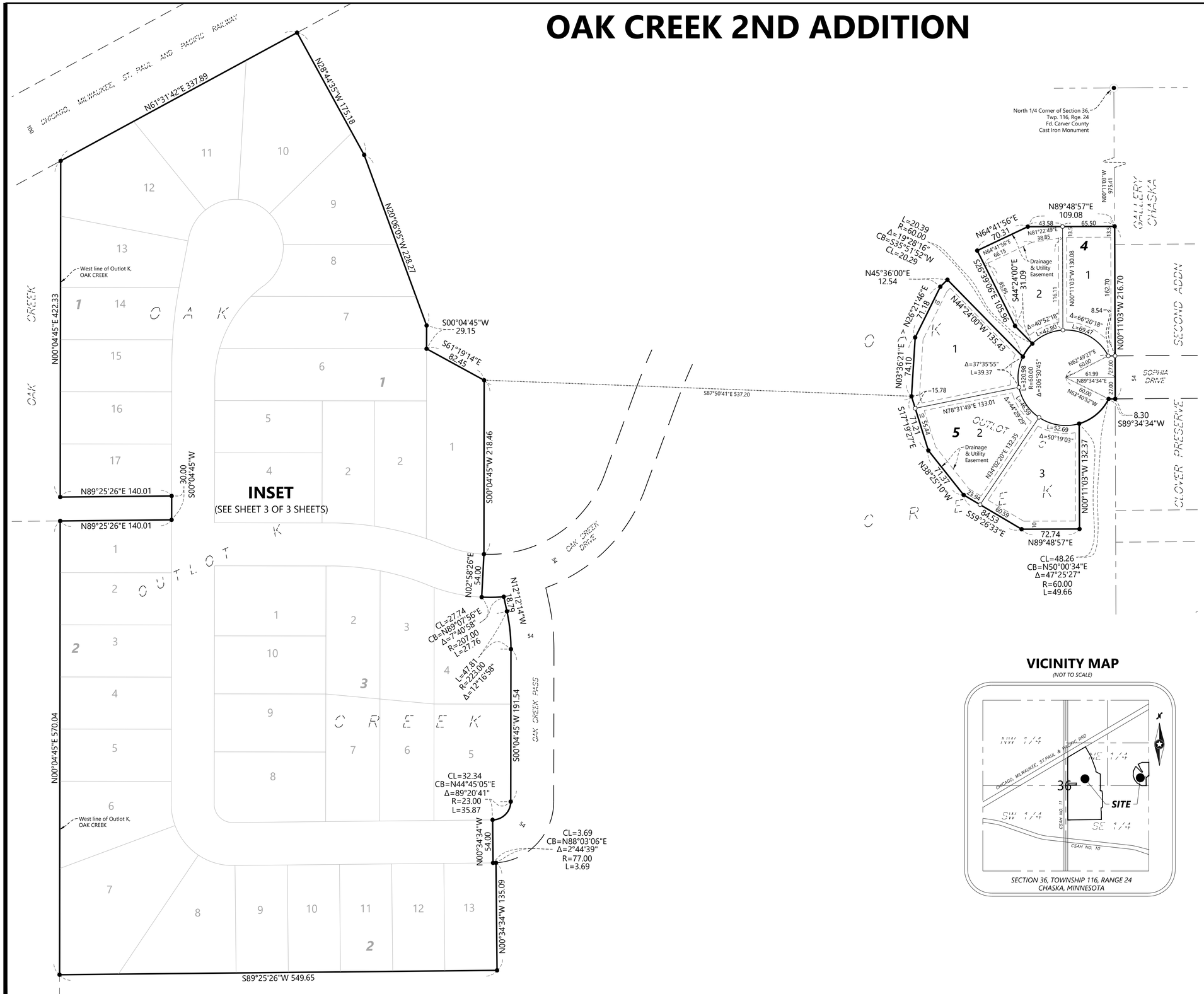

DRAINAGE AND UTILITY EASEMENTS ARE SHOWN THUS:

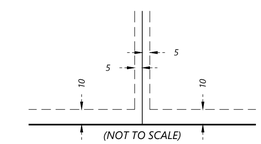

BEING 5 FEET IN WIDTH, UNLESS OTHERWISE INDICATED, AND ADJOINING LOT LINES, AND 10 FEET IN WIDTH AND ADJOINING RIGHT-OF-WAY LINES AS SHOWN ON THE PLAT

○ SET 1/2" BY 14" IRON PIPE WITH CAP #43055

● FOUND MONUMENT AS NOTED ON PLAT

BEARINGS SHOWN ARE BASED UPON THE WEST LINE OF OUTLOT K, OAK CREEK IS ASSUMED TO BEAR N 00°04'45" E (CARVER COUNTY 1983NAD (1986ADJ)

VICINITY MAP

(NOT TO SCALE)

SECTION 36, TOWNSHIP 116, RANGE 24
CHASKA, MINNESOTA

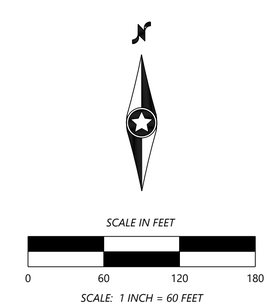

Westwood
Professional Services, Inc.

OAK CREEK 2ND ADDITION

PLAT FILE NO.	
C.R. DOC. NO.	

DRAINAGE AND UTILITY EASEMENTS ARE SHOWN THUS:

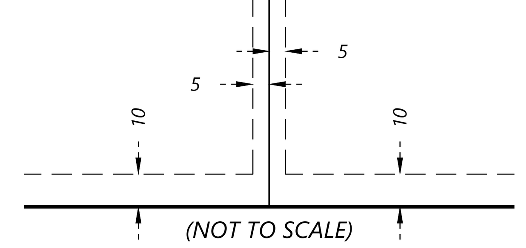

(NOT TO SCALE)

BEING 5 FEET IN WIDTH, UNLESS OTHERWISE INDICATED, AND ADJOINING LOT LINES, AND 10 FEET IN WIDTH AND ADJOINING RIGHT-OF-WAY LINES AS SHOWN ON THE PLAT

○ *SET 1/2" BY 14" IRON PIPE WITH CAP #43055*

● *FOUND MONUMENT AS NOTED ON PLAT*

BEARINGS SHOWN ARE BASED UPON THE WEST LINE OF OUTLOT K, OAK CREEK IS ASSUMED TO BEAR N 00'04'45" E (CARVER COUNTY 1983NAD (1986ADJ)

SCALE IN FEET

0 40 80 120

SCALE: 1 INCH = 40 FEET

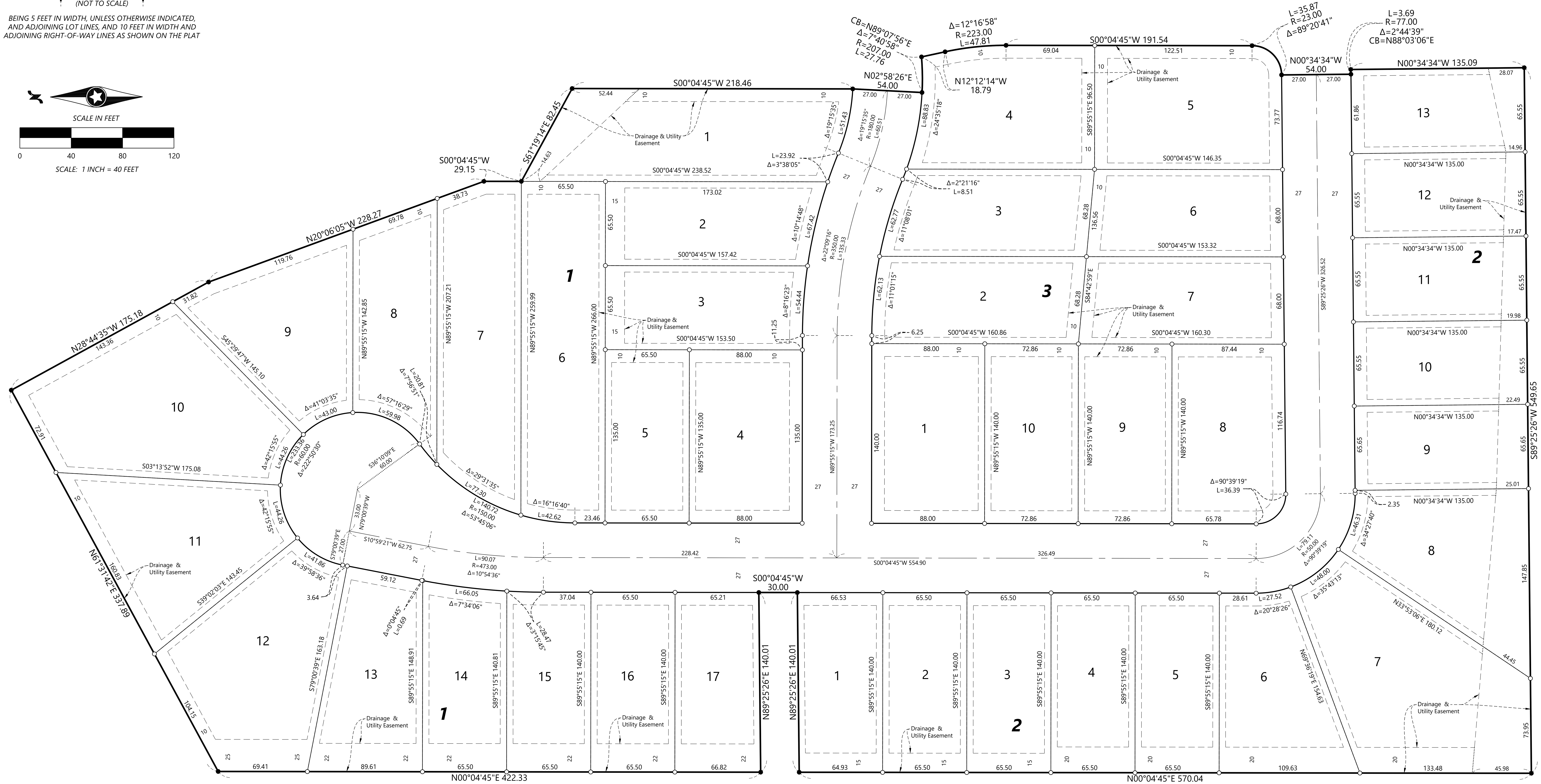

© 2022 Westwood Professional Services, Inc.

CONSTRUCTION PLANS

FOR

SANITARY SEWER, WATERMAIN, STORM SEWER AND STREETS

FOR

OAK CREEK 2ND ADDITION

CHASKA, MN

PREPARED FOR:

DR HORTON, INC. - MINNESOTA

20860 KENBRIDGE COURT, SUITE 100
LAKEVILLE, MINNESOTA 55044
CONTACT: RICK THOMSON
PHONE: 952-985-7430
EMAIL: RLTHOMSON@DRHORTON.COM

PREPARED BY:

Westwood

Phone (952) 937-5150 12701 Whitewater Drive, Suite #300
Fax (952) 937-5822 Minnetonka, MN 55343
Toll Free (888) 937-5150 westwoodps.com

Westwood Professional Services, Inc.

PROJECT NUMBER: 0024429.02
CONTACT: FRANCIS D. HAGEN

Vicinity Map
(NOT TO SCALE)

SHEET INDEX

Sheet List Table	
SHEET NUMBER	SHEET TITLE
1	Cover
2	Overall
3	Sanitary Sewer and Watermain Construction Plan
4	Sanitary Sewer and Watermain Construction Plan
5	Sanitary Sewer and Watermain Construction Plan
6	Storm Sewer and Street Construction Plan
7	Storm Sewer and Street Construction Plan
8	Storm Sewer and Street Construction Plan
9	Storm Sewer Construction Plan
10	INTERSECTION DETAILS
11	INTERSECTION DETAILS
12	TYPICAL STREET SECTIONS
13	DETAILS
14	DETAILS
15	DETAILS
16	DETAILS
17	DETAILS
18	DETAILS
19	DETAILS
20	DETAILS

BENCHMARKS

MnDOT CONTROL POINT "GUERN"
POINT #7002
EL = 970.38

MnDOT CONTROL POINT "VICTORY"
POINT #7003
EL = 995.14

HORIZONTAL DATUM
1983NAD (1986 ADJ) CARVER COUNTY COORDINATE SYSTEM; US SURVEY FOOT

VERTICAL DATUM
1988NAVD US SURVEY FOOT

NO.	DATE	REVISION	SHEETS
	.	.	
	.	.	
	.	.	
	.	.	
	.	.	
	.	.	
	.	.	
	.	.	
	.	.	
	.	.	

CONSTRUCTION PLANS
FOR
SANITARY SEWER, WATERMAIN, STORM SEWER AND STREETS
FOR
OAK CREEK 2ND ADDITION
CHASKA, MN

INITIAL SUBMITTAL DATE: 02/07/23 SHEET: 1 OF 20

N:\0024429.02\DWG\CIVIL\UTILITY\0024429.025-CV.DWG

OAK CREEK 2ND ADDITION

© 2022 Westwood Professional Services, Inc.

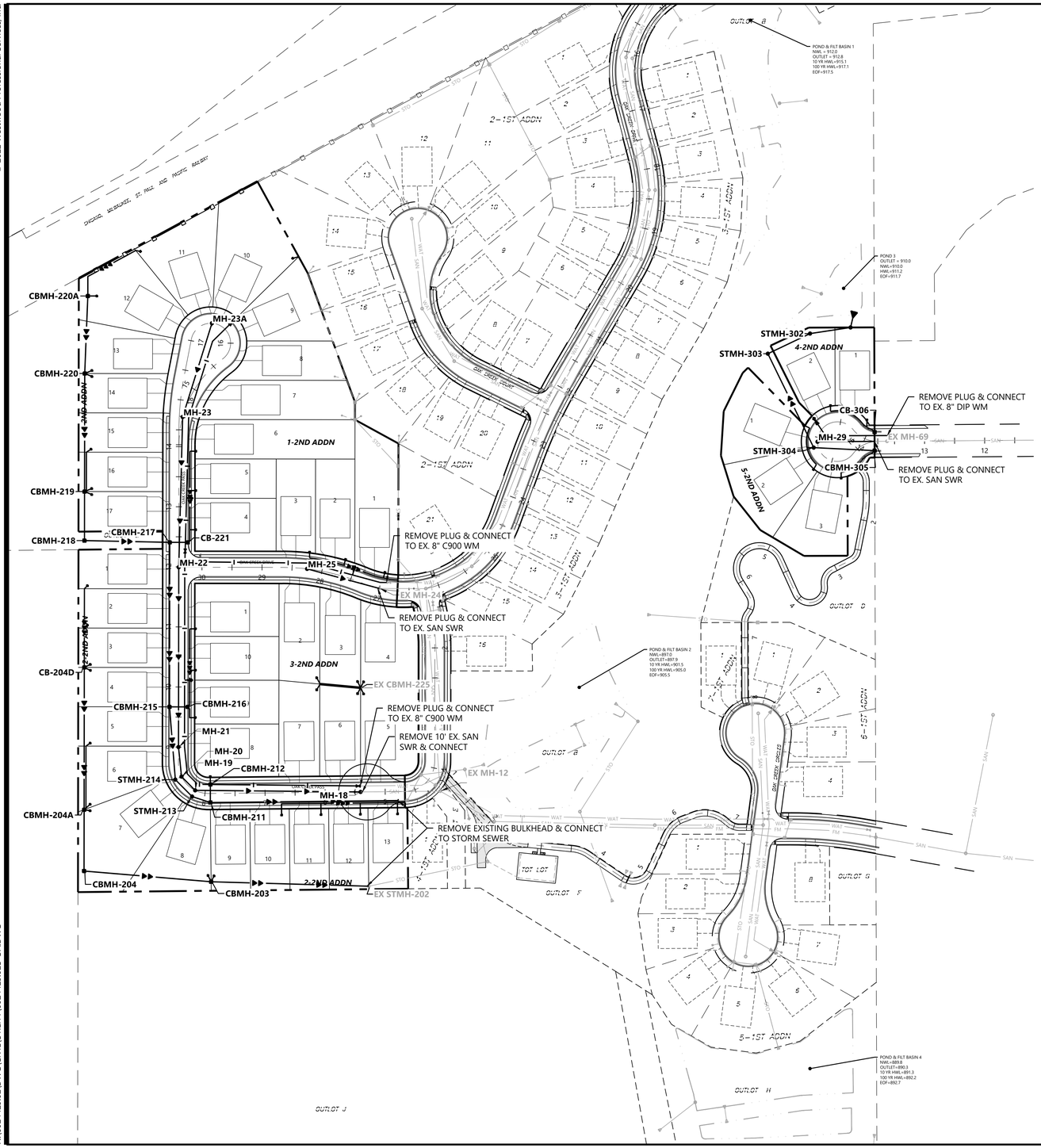

Call 48 Hours before digging:

811 or call811.com

Common Ground Alliance

STROM SEWER CASTING SCHEDULE			
Structure			Casting Type
Number	Type	Dia.	
203	CBMH	48"	R-4342
204	CBMH	48"	R-4342
204A	CBMH	48"	R-4342
204D	CB	27"	R-4342
211	CBMH	60"	R-3067-V
212	CB	2'x 3'	R-3067-V
213	STMH	48"	R-1642
214	STMH	48"	R-1642
215	CBMH	48"	R-3067-V
216	CB	2'x 3'	R-3067-V
217	CBMH	60"	R-3067-V
218	CBMH	60"	R-4342
219	CBMH	48"	R-4342
220	CBMH	48"	R-4342
220A	CB	27"	R-4342
221	CB	2'x 3'	R-3067-V
250	STUB	21"	-
300	FES	12"	w/TRASHGUARD
301	STMH	48"	R-1642
302	STMH	48"	R-1642
303	STMH	48"	R-1642
304	STMH	48"	R-1642
305	CBMH	48"	R-3067-VB
306	CB	2'x 3'	R-3067-VB

UTILITY LEGEND

EXISTING	PROPOSED	
SAN		SANITARY SEWER
STO		STORM SEWER
DT		DRAIN TILE
WAT		WATER MAIN
WAT		HYDRANT

GENERAL UTILITY NOTES

1. THE CONTRACTOR SHALL VERIFY ALL EXISTING CONDITIONS PRIOR TO CONSTRUCTION AND NOTIFY THE OWNER OF ANY DIFFERENCES.
2. UNLESS OTHERWISE NOTED, ALL MATERIALS, CONST. TECHNIQUES AND TESTING SHALL CONFORM TO THE 2013 ED. OF THE "STANDARD UTILITIES SPECIFICATIONS FOR WATER MAIN AND SERVICE LINE INSTALLATION AND SANITARY SEWER AND STORM SEWER INSTALLATION BY THE CITY ENGINEERING ASSOCIATION OF MINN." AND TO THE "STANDARD SPECIFICATION FOR HIGHWAY CONSTRUCTION" MINN. DEPT. OF TRANS., AUGUST 31, 2016 INCLUDING THE CURRENT ADDENDUM. THE CONTRACTOR SHALL BE REQUIRED TO FOLLOW ALL PROCEDURES AS OUTLINED BY THE LOCAL AGENCY.
3. THE CONTRACTOR SHALL RECEIVE THE NECESSARY PERMITS FOR ALL WORK OUTSIDE OF THE PROPERTY LIMITS.
4. VERIFY EXISTING INVERT LOCATION & ELEVATION PRIOR TO BEGINNING CONSTRUCTION.
5. THE CONTRACTOR SHALL CONTACT "GOPHER STATE ONE CALL" FOR FOR UTILITY LOCATIONS PRIOR TO UTILITY INSTALLATION.
6. WATER SERVICE SHALL BE INSTALLED WITH A MIN OF 7.5' OF COVER. THE CONTRACTOR SHALL VERIFY AS-BUILT CONSTRUCTION PLANS TO CHECK LOCATION AND MATERIAL TYPE.
7. ALL STORM SEWER PIPE SHALL BE CLASS 5 UNLESS OTHERWISE NOTED.
8. SEWER AND WATER SERVICES SHALL BE PLACED TO AVOID DRIVEWAYS.

1" = 100'

0' 100' 200' 300'

CONSTRUCTION PLANS

OAK CREEK 2ND ADDITION

N:\0024429.02\DWG\CIVIL\UTILITY\0024429.025-OA.DWG

DESIGNED:	FDH II
CHECKED:	FDH II
DRAWN:	KFP/DJW
HORIZONTAL SCALE:	100'
VERTICAL SCALE:	20' OR 10'

INITIAL ISSUE: 02/07/23

REVISIONS:

PREPARED FOR:

DR HORTON, INC. - MINNESOTA

20860 KENBRIDGE COURT, SUITE 100
LAKEVILLE, MINNESOTA 55044

I HEREBY CERTIFY THAT THIS PLAN WAS PREPARED BY ME OR UNDER MY DIRECT SUPERVISION AND THAT I AM A DULY LICENSED PROFESSIONAL ENGINEER UNDER THE LAWS OF THE STATE OF MINNESOTA.

FRANCIS D. HAGEN

DATE: 02/07/23 LICENSE NO. 17716

OAK CREEK 2ND ADDITION

CHASKA, MN

Westwood

Phone (952) 937-5150 12701 Whitewater Drive, Suite #300
Fax (952) 937-5822 Minnetonka, MN 55343
Toll Free (888) 937-5150 westwoodps.com

Westwood Professional Services, Inc.

OVERALL

PROJECT NUMBER: 0024429.02

SHEET NUMBER: 2 OF 20

DATE: 02/07/23

© 2022 Westwood Professional Services, Inc.

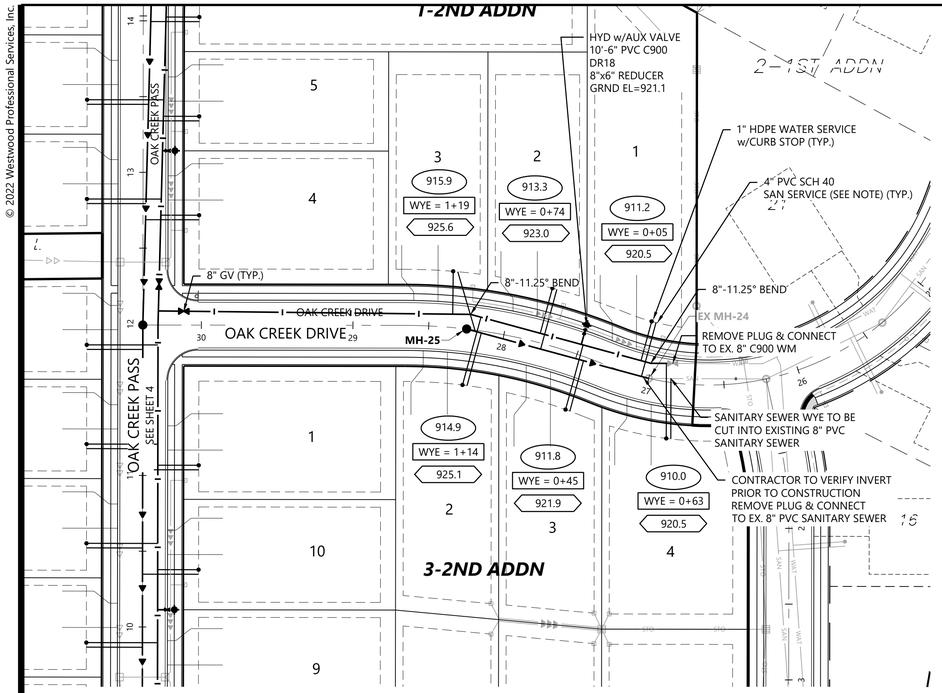

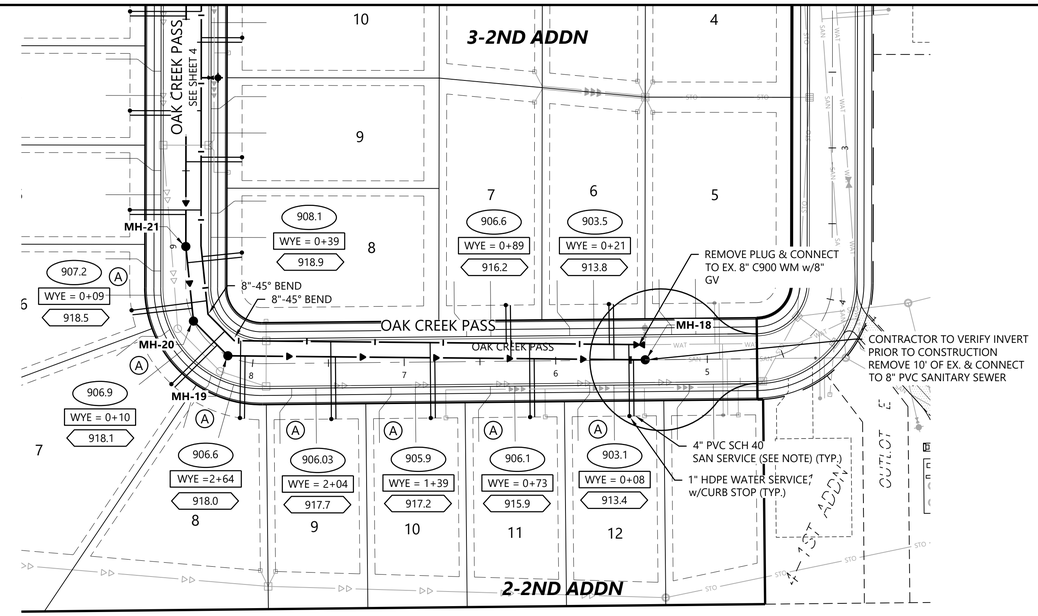

Call 48 Hours before digging:
811 or call811.com
Common Ground Alliance

LEGEND

(XXX.X)	SANITARY SEWER SERVICE INVERT ELEVATION @ EASEMENT LINE
WYE = X+XX / X.X' RISER	SANITARY SEWER SERVICE WYE LOCATION ON MAIN LINE FROM DOWNSTREAM MANHOLE
XXX.X	DENOTES ELEVATION OF THE TOP OF WATER SERVICE STOP BOX
(A)	WATER SERVICE TO THIS LOT SHALL BE INSTALLED UNDER PROPOSED STORM SEWER & SHALL MAINTAIN A MINIMUM VERTICAL SEPARATION FROM STORM PIPE OF 1.5 FEET
(B)	SANITARY SEWER SERVICE TO THIS LOT SHALL BE INSTALLED UNDER PROPOSED STORM SEWER - INSTALL RISER AT EASEMENT LINE
(C)	WATER SERVICE OVER STORM SEWER (INSULATE)

GENERAL NOTES

FLAG HYDRANTS.

EXTEND RODS ON ALL VALVES PER CITY DETAIL WAT-1

ALL DROP MANHOLES TO BE LINED PER CITY DETAIL SAN-4

SERVICE RISERS FOR SEWER MAINS LESS THAN 22' SHALL BE SCHEDULE 40 PVC (SOLVENT WELD JOINTS).
FOR DEPTHS GREATER THAN 22', SERVICE PIPE SHALL BE C900 FROM MAIN TO CONNECTION WITH TRANSITION FITTING FROM C900 TO SCH 40 INSTALLED AT CONNECTION LOCATION.

1" POLY WATER SERVICE OR APPROVED EQUAL SEE CITY DETAIL SER-2A

INVERTS & DOGHOUSES SHALL BE POURED/GROUTED WITHIN 2 DAYS AFTER STRUCTURE INSTALLATION

OAK CREEK DRIVE

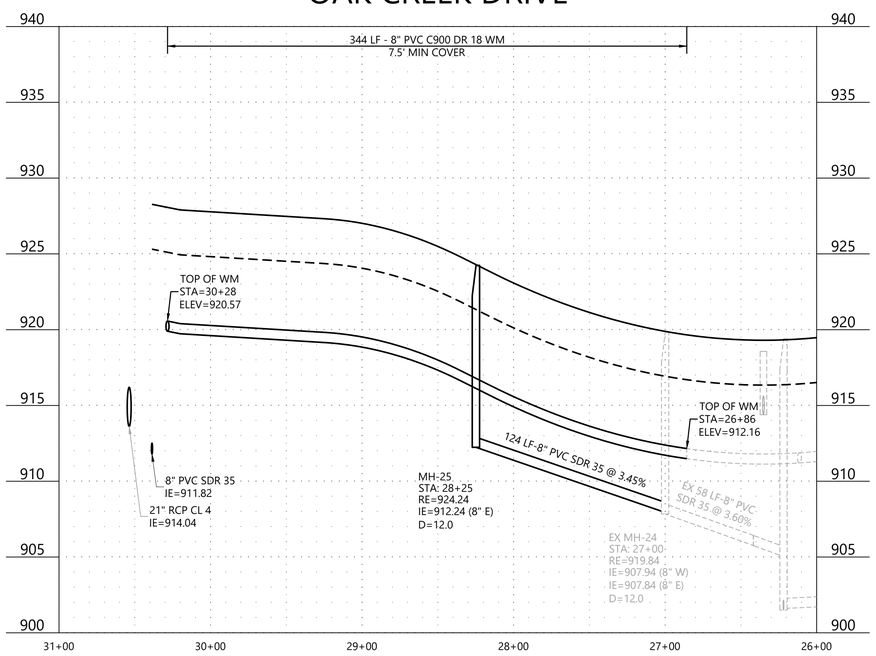

OAK CREEK PASS

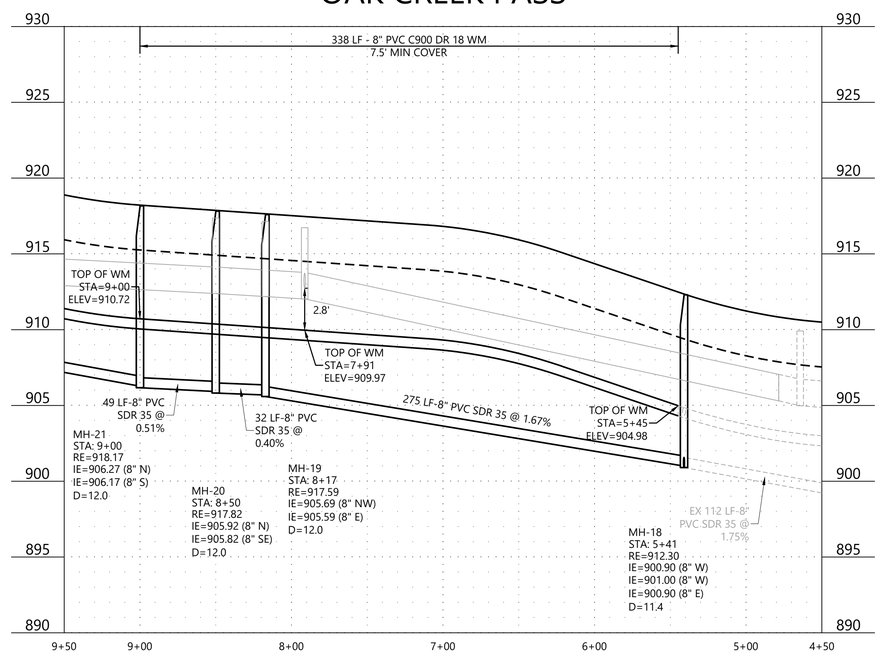

1" = 50'
0' 50' 100' 150'

CONSTRUCTION PLANS

N:\0024429.02\DWG\CIVIL\UTILITY\0024429.025-UT.DWG

OAK CREEK 2ND ADDITION

DESIGNED:	FDH II
CHECKED:	FDH II
DRAWN:	KFP/DJW
HORIZONTAL SCALE:	50'
VERTICAL SCALE:	10' OR 5'

INITIAL ISSUE: 02/07/23
REVISIONS:

PREPARED FOR:

DR HORTON, INC. - MINNESOTA
20860 KENBRIDGE COURT, SUITE 100
LAKEVILLE, MINNESOTA 55044

I HEREBY CERTIFY THAT THIS PLAN WAS PREPARED BY ME OR UNDER MY DIRECT SUPERVISION AND THAT I AM A DULY LICENSED PROFESSIONAL ENGINEER UNDER THE LAWS OF THE STATE OF MINNESOTA.
FRANCIS D. HAGEN
DATE: 02/07/23 LICENSE NO. 17716

OAK CREEK 2ND ADDITION
CHASKA, MN

Westwood
Phone (952) 937-5150 12701 Whitewater Drive, Suite #300
Fax (952) 937-5822 Minnetonka, MN 55343
Toll Free (888) 937-5150 westwoodps.com
Westwood Professional Services, Inc.

SANITARY SEWER AND WATERMAIN CONSTRUCTION PLAN
PROJECT NUMBER: 0024429.02

SHEET NUMBER: 3 OF 20
DATE: 02/07/23

© 2022 Westwood Professional Services, Inc.

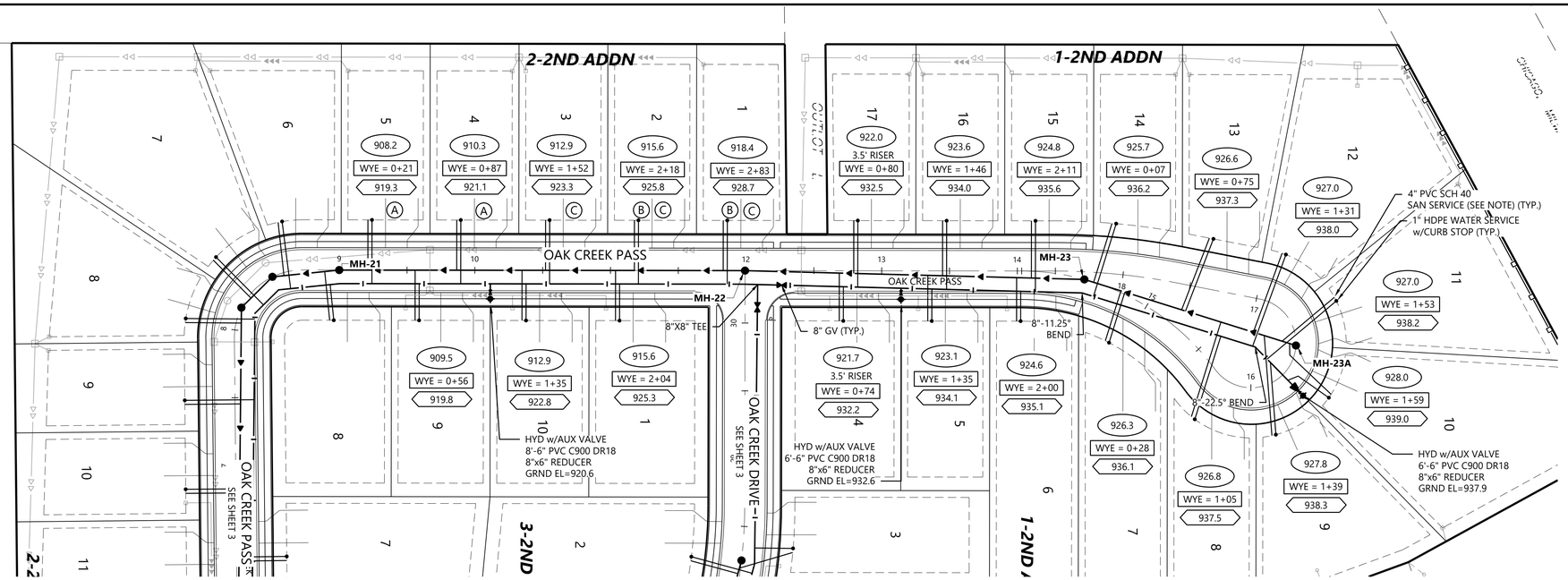

Call 48 Hours before digging:
811 or call811.com
Common Ground Alliance

LEGEND

XXX.X	SANITARY SEWER SERVICE INVERT ELEVATION @ EASEMENT LINE
WYE = X+XX / X.X' RISER	SANITARY SEWER SERVICE WYE LOCATION ON MAIN LINE FROM DOWNSTREAM MANHOLE
XXX.X	DENOTES ELEVATION OF THE TOP OF WATER SERVICE STOP BOX
A	WATER SERVICE TO THIS LOT SHALL BE INSTALLED UNDER PROPOSED STORM SEWER & SHALL MAINTAIN A MINIMUM VERTICAL SEPARATION FROM STORM PIPE OF 1.5 FEET
B	SANITARY SEWER SERVICE TO THIS LOT SHALL BE INSTALLED UNDER PROPOSED STORM SEWER - INSTALL RISER AT EASEMENT LINE
C	WATER SERVICE OVER STORM SEWER (INSULATE)

GENERAL NOTES

FLAG HYDRANTS.

EXTEND RODS ON ALL VALVES PER CITY DETAIL WAT-1

ALL DROP MANHOLES TO BE LINED PER CITY DETAIL SAN-4

SERVICE RISERS FOR SEWER MAINS LESS THAN 22' SHALL BE SCHEDULE 40 PVC (SOLVENT WELD JOINTS).
FOR DEPTHS GREATER THAN 22', SERVICE PIPE SHALL BE C900 FROM MAIN TO CONNECTION WITH TRANSITION FITTING FROM C900 TO SCH 40 INSTALLED AT CONNECTION LOCATION.

1" POLY WATER SERVICE OR APPROVED EQUAL SEE CITY DETAIL SER-2A

INVERTS & DOGHOUSES SHALL BE POURED/GROUTED WITHIN 2 DAYS AFTER STRUCTURE INSTALLATION

OAK CREEK PASS

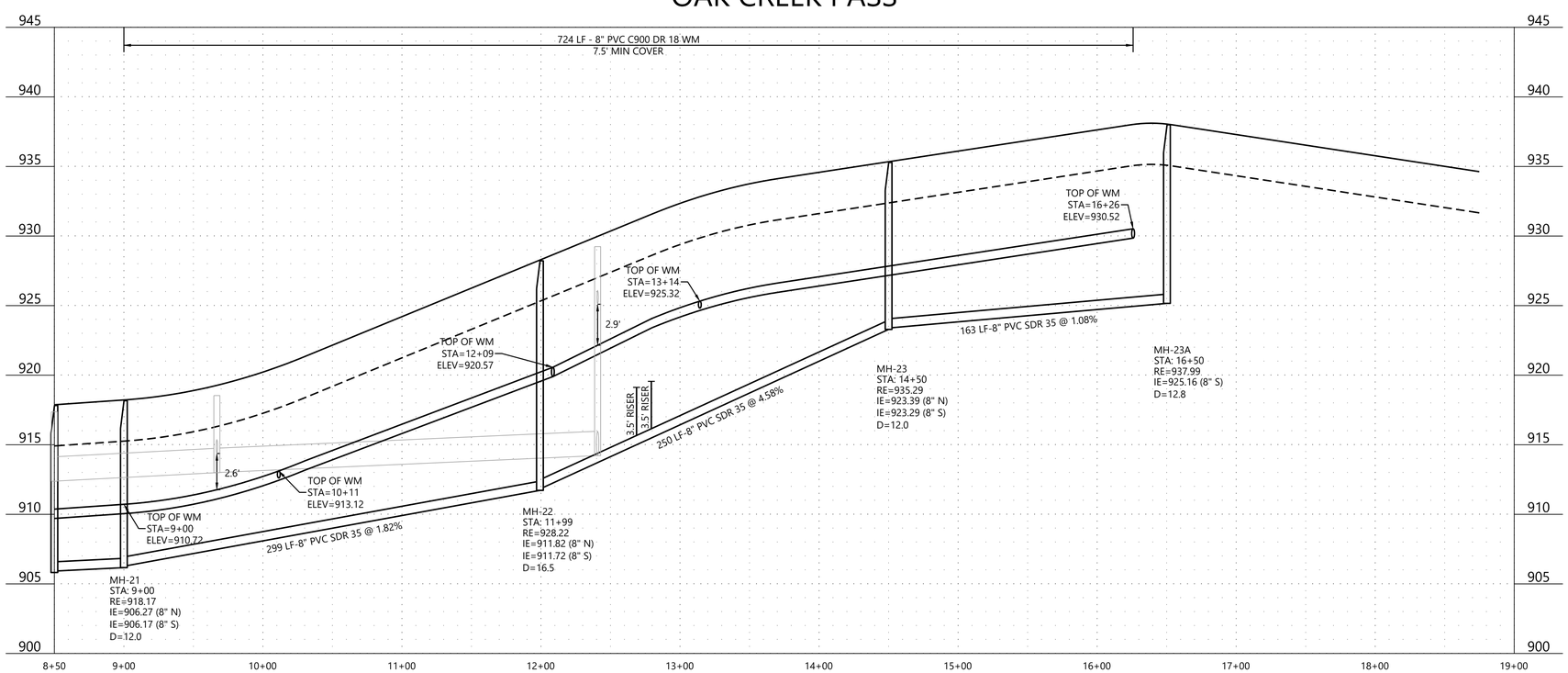

1" = 50'
0' 50' 100' 150'

CONSTRUCTION PLANS

OAK CREEK 2ND ADDITION

N:\0024429.02\DWG\CIV\LU\TILITY\0024429.025-UT.DWG

DESIGNED:	FDH II
CHECKED:	FDH II
DRAWN:	KFP/DJW
HORIZONTAL SCALE:	50'
VERTICAL SCALE:	10' OR 5'

INITIAL ISSUE: 02/07/23
REVISIONS:
1 . .
2 . .
3 . .
4 . .
5 . .

PREPARED FOR:

DR HORTON, INC. - MINNESOTA
20860 KENBRIDGE COURT, SUITE 100
LAKEVILLE, MINNESOTA 55044

I HEREBY CERTIFY THAT THIS PLAN WAS PREPARED BY ME OR UNDER MY DIRECT SUPERVISION AND THAT I AM A DULY LICENSED PROFESSIONAL ENGINEER UNDER THE LAWS OF THE STATE OF MINNESOTA.
FRANCIS D. HAGEN
DATE: 02/07/23 LICENSE NO. 17716

OAK CREEK 2ND ADDITION
CHASKA, MN

Westwood
Phone (952) 937-5150 12701 Whitewater Drive, Suite #300
Fax (952) 937-5822 Minnetonka, MN 55343
Toll Free (888) 937-5150 westwoodps.com
Westwood Professional Services, Inc.

SANITARY SEWER AND WATERMAIN CONSTRUCTION PLAN
PROJECT NUMBER: 0024429.02

SHEET NUMBER: 4 OF 20
DATE: 02/07/23

© 2022 Westwood Professional Services, Inc.

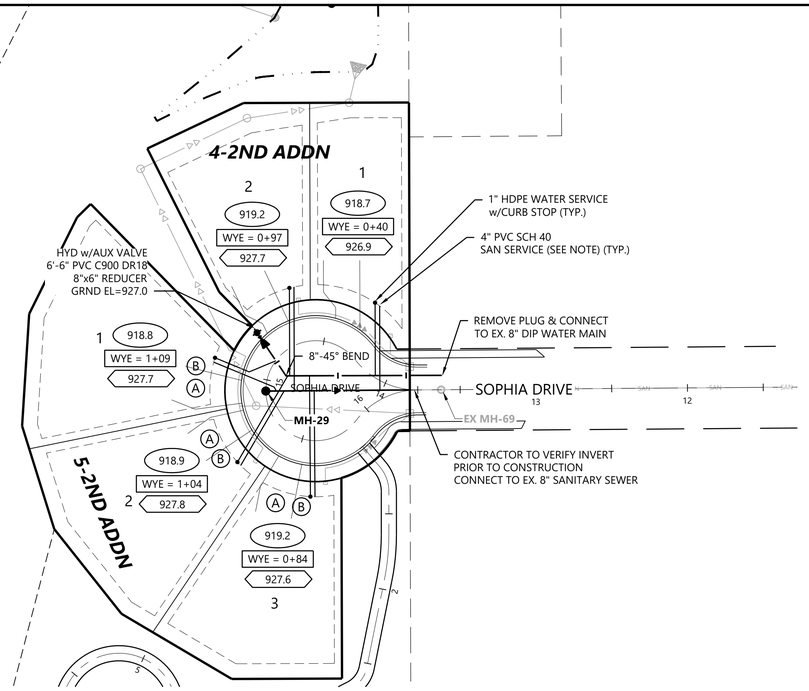

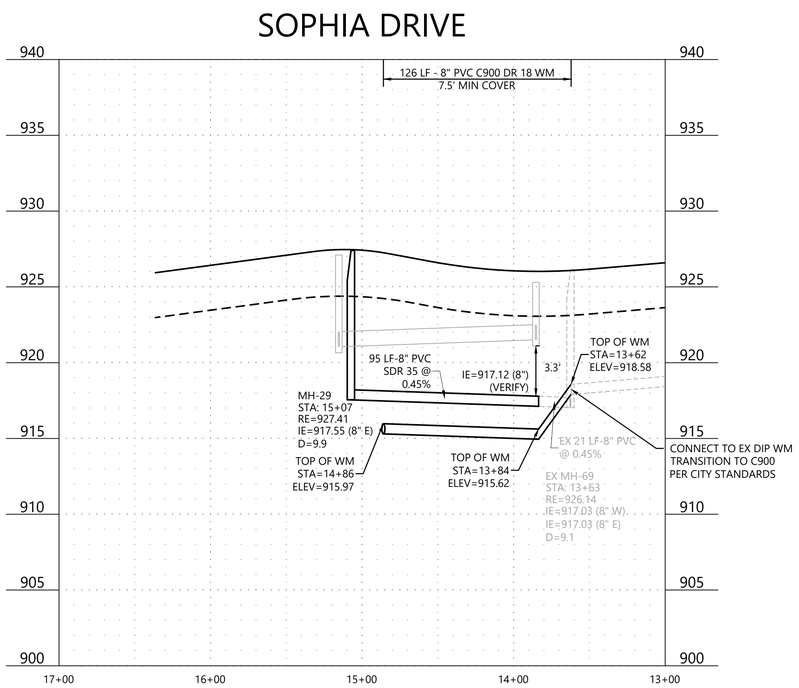

Call 48 Hours before digging:

811 or call811.com
Common Ground Alliance

LEGEND

XXX.X	SANITARY SEWER SERVICE INVERT ELEVATION @ EASEMENT LINE
WYE = X+XX / X.X' RISER	SANITARY SEWER SERVICE WYE LOCATION ON MAIN LINE FROM DOWNSTREAM MANHOLE
XXX.X	DENOTES ELEVATION OF THE TOP OF WATER SERVICE STOP BOX
A	WATER SERVICE TO THIS LOT SHALL BE INSTALLED UNDER PROPOSED STORM SEWER & SHALL MAINTAIN A MINIMUM VERTICAL SEPARATION FROM STORM PIPE OF 1.5 FEET
B	SANITARY SEWER SERVICE TO THIS LOT SHALL BE INSTALLED UNDER PROPOSED STORM SEWER - INSTALL RISER AT EASEMENT LINE
C	WATER SERVICE OVER STORM SEWER (INSULATE)

GENERAL NOTES

FLAG HYDRANTS.

EXTEND RODS ON ALL VALVES PER CITY DETAIL WAT-1

ALL DROP MANHOLES TO BE LINED PER CITY DETAIL SAN-4

SERVICE RISERS FOR SEWER MAINS LESS THAN 22' SHALL BE SCHEDULE 40 PVC (SOLVENT WELD JOINTS).
FOR DEPTHS GREATER THAN 22', SERVICE PIPE SHALL BE C900 FROM MAIN TO CONNECTION WITH TRANSITION FITTING FROM C900 TO SCH 40 INSTALLED AT CONNECTION LOCATION.

1" POLY WATER SERVICE OR APPROVED EQUAL SEE CITY DETAIL SER-2A

INVERTS & DOGHOUSES SHALL BE POURED/GROUTED WITHIN 2 DAYS AFTER STRUCTURE INSTALLATION

1" = 50'

0' 50' 100' 150'

CONSTRUCTION PLANS

OAK CREEK 2ND ADDITION

N:\0024429.02\DWG\CIVIL\UTILITY\0024429.02S-UT.DWG

DESIGNED:	FDH II
CHECKED:	FDH II
DRAWN:	KFP/DJW
HORIZONTAL SCALE:	50'
VERTICAL SCALE:	10' OR 5'

INITIAL ISSUE: 02/07/23
REVISIONS:

PREPARED FOR:

DR HORTON, INC. - MINNESOTA
20860 KENBRIDGE COURT, SUITE 100
LAKEVILLE, MINNESOTA 55044

I HEREBY CERTIFY THAT THIS PLAN WAS PREPARED BY ME OR UNDER MY DIRECT SUPERVISION AND THAT I AM A DULY LICENSED PROFESSIONAL ENGINEER UNDER THE LAWS OF THE STATE OF MINNESOTA.

FRANCIS D. HAGEN
DATE: 02/07/23 LICENSE NO. 17716

OAK CREEK 2ND ADDITION
CHASKA, MN

Westwood
Phone (952) 937-5150 12701 Whitewater Drive, Suite #300
Fax (952) 937-5822 Minnetonka, MN 55343
Toll Free (888) 937-5150 westwoodps.com
Westwood Professional Services, Inc.

SANITARY SEWER AND WATERMAIN CONSTRUCTION PLAN
PROJECT NUMBER: 0024429.02

SHEET NUMBER: 5 OF 20
DATE: 02/07/23

© 2022 Westwood Professional Services, Inc.

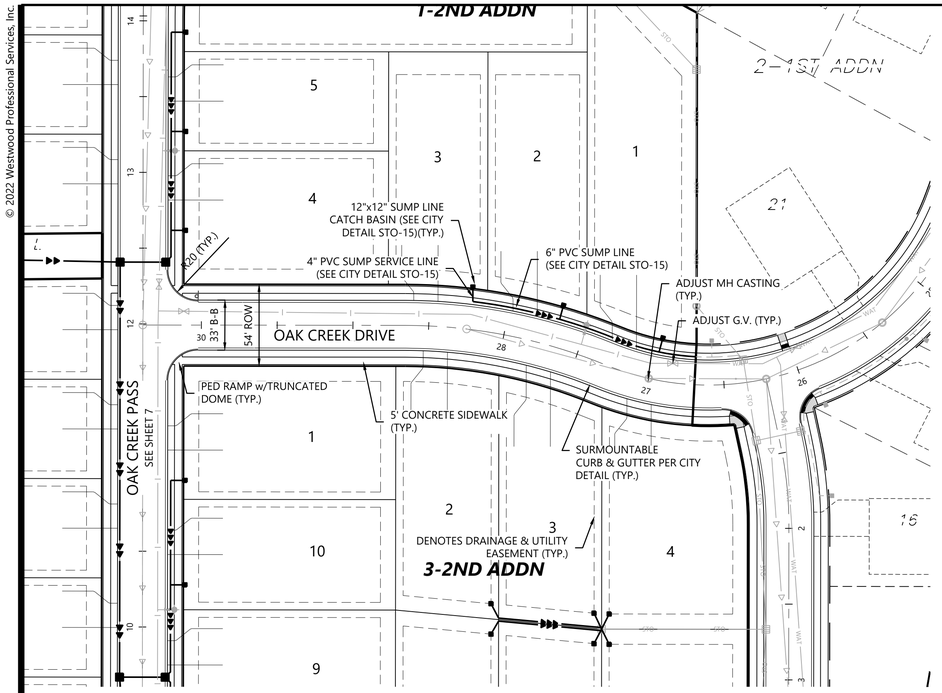

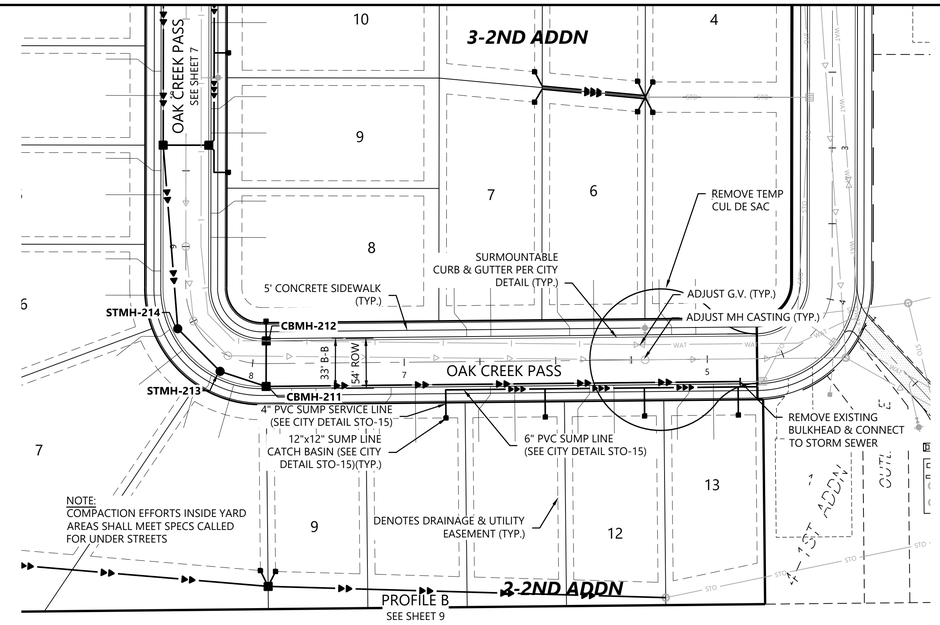

Call 48 Hours before digging:
811 or call811.com
Common Ground Alliance

LEGEND

EXISTING	PROPOSED	
900.00	× 900.00	GUTTER ELEVATION

GENERAL NOTES

1. RADIUS TO BE B618 CURB & GUTTER WITH 10' TRANSITIONS FROM SURMOUNTABLE CURB & GUTTER.
2. ALL RCP SHALL BE CLASS 5, UNLESS OTHERWISE NOTED.
3. ALL CATCH BASIN CASTINGS IN CURB SHALL BE SUMPED 0.15 FEET. MANHOLE CASTINGS IN PAVED AREAS SHALL BE SUMPED 0.05 FEET. RIM ELEVATIONS SHOWN ON THE PROFILES REFLECT THE SUMPED ELEVATIONS.
4. INVERTS & DOGHOUSES SHALL BE POURED/GROUTED WITH 2 DAYS AFTER STRUCTURE INSTALLATION

OAK CREEK DRIVE

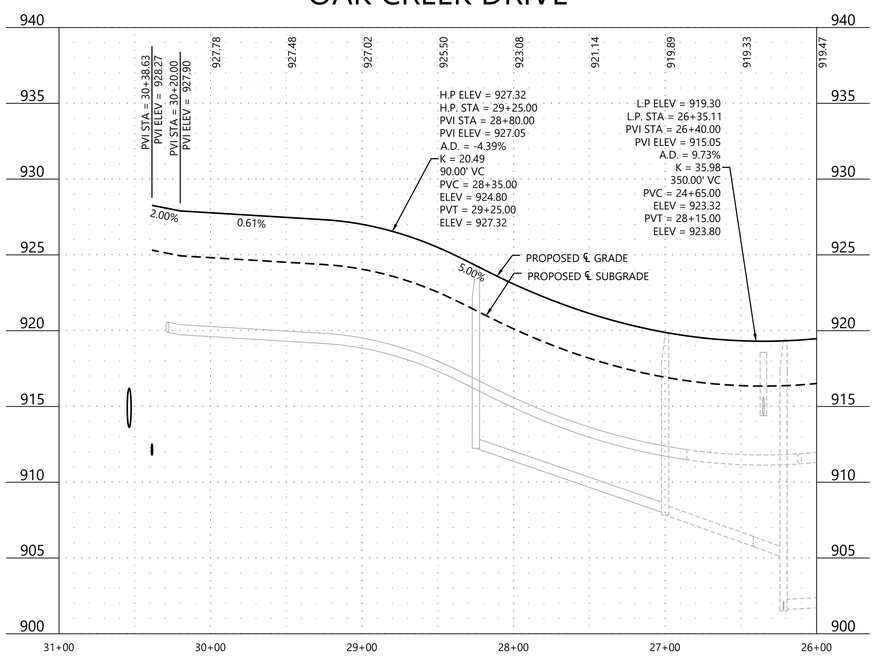

OAK CREEK PASS

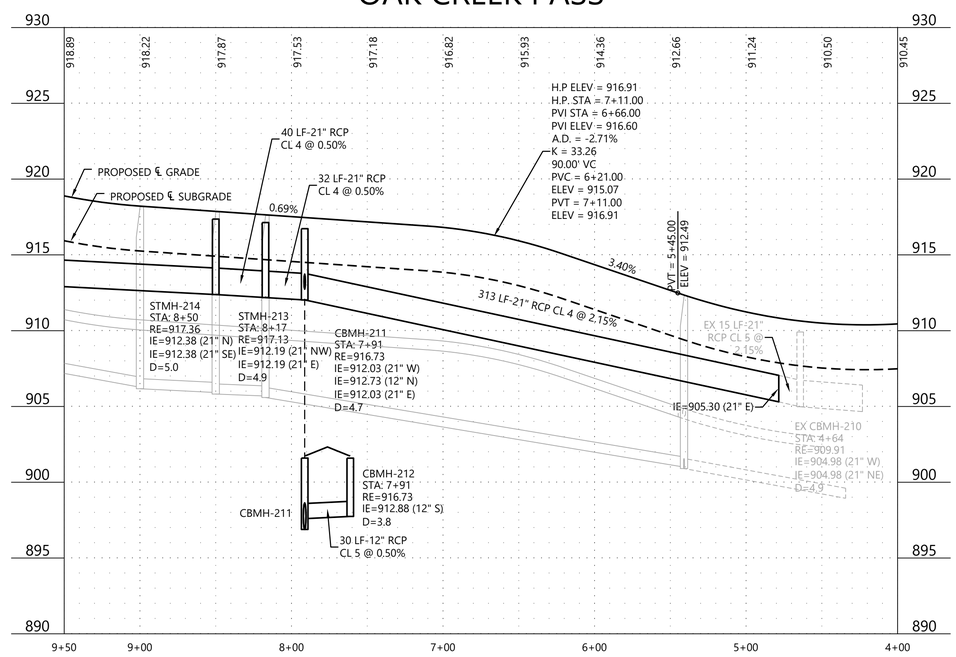

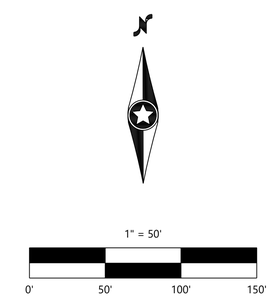

CONSTRUCTION PLANS

OAK CREEK 2ND ADDITION

N:\0024429.02\DWG\CIVIL\UTILITY\0024429.02S-ST.DWG

DESIGNED:	FDH II
CHECKED:	FDH II
DRAWN:	KFP/DJW
HORIZONTAL SCALE:	50'
VERTICAL SCALE:	10' OR 5'

INITIAL ISSUE: 02/07/23
REVISIONS:

PREPARED FOR:

DR HORTON, INC. - MINNESOTA
20860 KENBRIDGE COURT, SUITE 100
LAKEVILLE, MINNESOTA 55044

I HEREBY CERTIFY THAT THIS PLAN WAS PREPARED BY ME OR UNDER MY DIRECT SUPERVISION AND THAT I AM A DULY LICENSED PROFESSIONAL ENGINEER UNDER THE LAWS OF THE STATE OF MINNESOTA.
FRANCIS D. HAGEN
DATE: 02/07/23 LICENSE NO. 17716

OAK CREEK 2ND ADDITION
CHASKA, MN

Westwood
Phone (952) 937-5150 12701 Whitewater Drive, Suite #300
Fax (952) 937-5822 Minnetonka, MN 55343
Toll Free (888) 937-5150 westwoodps.com
Westwood Professional Services, Inc.

STORM SEWER AND STREET CONSTRUCTION PLAN

PROJECT NUMBER: 0024429.02

SHEET NUMBER: 6 OF 20
DATE: 02/07/23

© 2022 Westwood Professional Services, Inc.

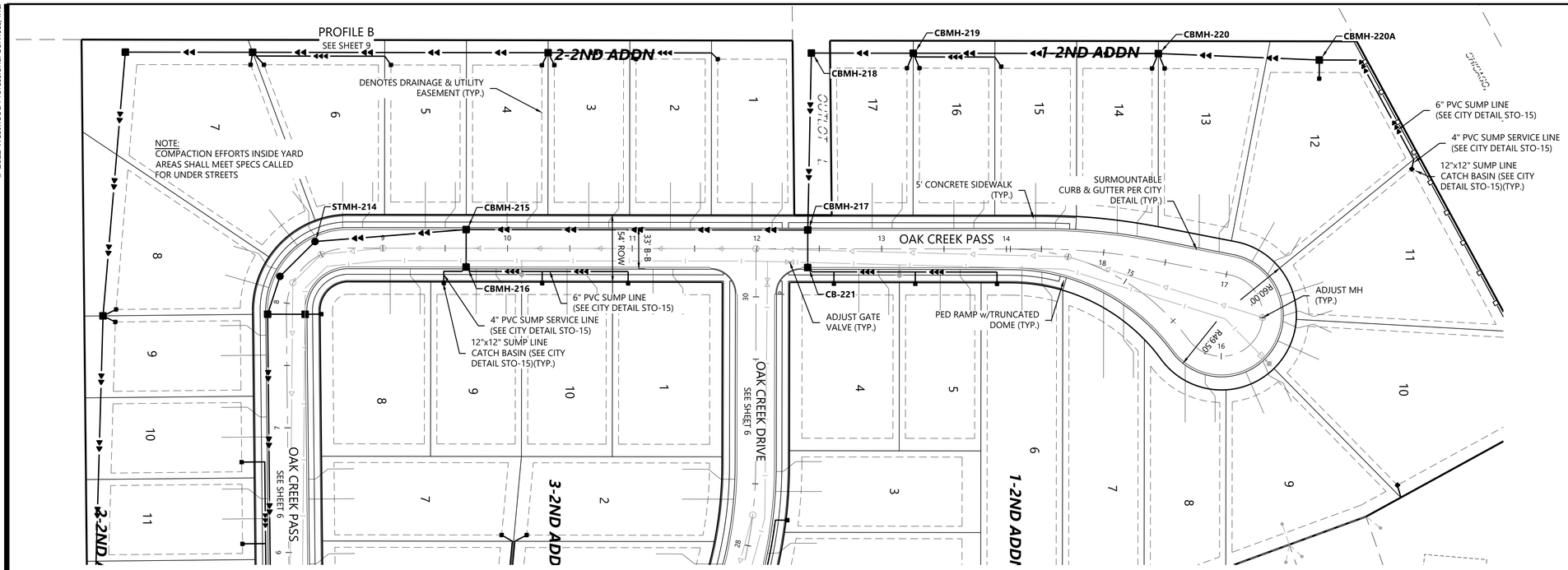

OAK CREEK PASS

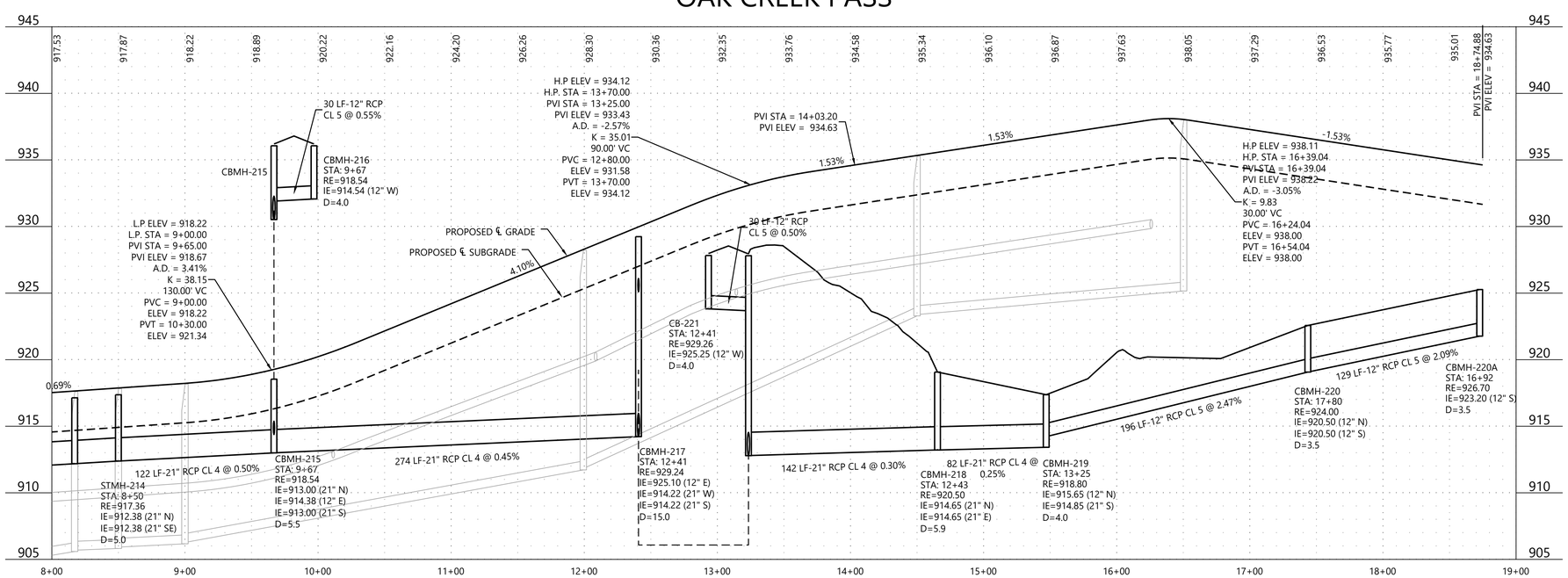

Call 48 Hours before digging:
811 or call811.com
Common Ground Alliance

LEGEND

EXISTING	PROPOSED	
× 900.00	× 900.00	GUTTER ELEVATION

GENERAL NOTES

1. RADIUS TO BE B618 CURB & GUTTER WITH 10' TRANSITIONS FROM SURMOUNTABLE CURB & GUTTER.
2. ALL RCP SHALL BE CLASS 5, UNLESS OTHERWISE NOTED.
3. ALL CATCH BASIN CASTINGS IN CURB SHALL BE SUMPED 0.15 FEET. MANHOLE CASTINGS IN PAVED AREAS SHALL BE SUMPED 0.05 FEET. RIM ELEVATIONS SHOWN ON THE PROFILES REFLECT THE SUMPED ELEVATIONS.
4. INVERTS & DOGHOUSES SHALL BE POURED/GROUTED WITH 2 DAYS AFTER STRUCTURE INSTALLATION

1" = 50'

0' 50' 100' 150'

CONSTRUCTION PLANS

OAK CREEK 2ND ADDITION

N:\0024429.02\DWG\CIVIL\UTILITY\0024429.02S-ST.DWG

DESIGNED:	FDH II
CHECKED:	FDH II
DRAWN:	KFP/DJW
HORIZONTAL SCALE:	50'
VERTICAL SCALE:	10' OR 5'

INITIAL ISSUE: 02/07/23
REVISIONS:

PREPARED FOR:

DR HORTON, INC. - MINNESOTA
20860 KENBRIDGE COURT, SUITE 100
LAKEVILLE, MINNESOTA 55044

I HEREBY CERTIFY THAT THIS PLAN WAS PREPARED BY ME OR UNDER MY DIRECT SUPERVISION AND THAT I AM A DULY LICENSED PROFESSIONAL ENGINEER UNDER THE LAWS OF THE STATE OF MINNESOTA.

FRANCIS D. HAGEN
DATE: 02/07/23 LICENSE NO. 17716

OAK CREEK 2ND ADDITION
CHASKA, MN

Westwood
Phone (952) 937-5150 12701 Whitewater Drive, Suite #300
Fax (952) 937-5822 Minnetonka, MN 55343
Toll Free (888) 937-5150 westwoodps.com
Westwood Professional Services, Inc.

STORM SEWER AND STREET CONSTRUCTION PLAN

PROJECT NUMBER: 0024429.02

SHEET NUMBER: 7 OF 20
DATE: 02/07/23

© 2022 Westwood Professional Services, Inc.

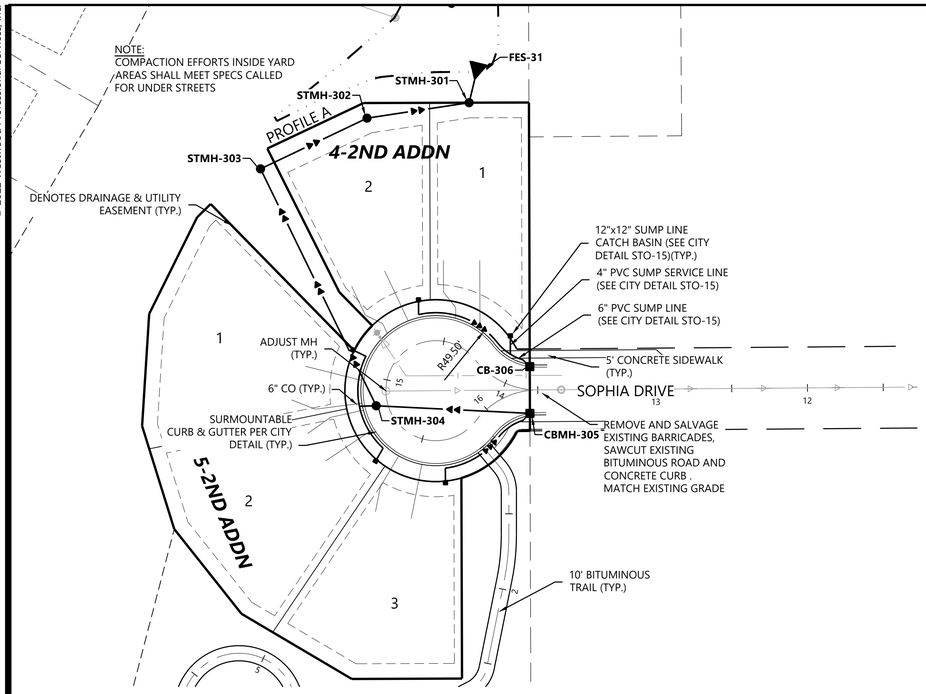

Call 48 Hours before digging:
811 or call811.com
Common Ground Alliance

LEGEND

EXISTING	PROPOSED	
× 900.00	× 900.00	GUTTER ELEVATION

GENERAL NOTES

1. RADIUS TO BE B618 CURB & GUTTER WITH 10' TRANSITIONS FROM SURMOUNTABLE CURB & GUTTER.
2. ALL RCP SHALL BE CLASS 5, UNLESS OTHERWISE NOTED.
3. ALL CATCH BASIN CASTINGS IN CURB SHALL BE SUMPED 0.15 FEET. MANHOLE CASTINGS IN PAVED AREAS SHALL BE SUMPED 0.05 FEET. RIM ELEVATIONS SHOWN ON THE PROFILES REFLECT THE SUMPED ELEVATIONS.
4. INVERTS & DOGHOUSES SHALL BE POURED/GROUTED WITH 2 DAYS AFTER STRUCTURE INSTALLATION

SOPHIA DRIVE

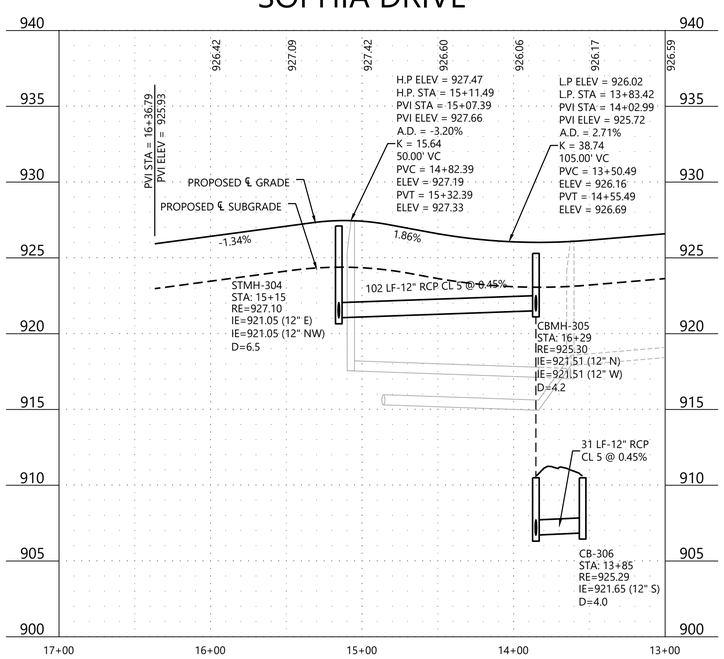

PROFILE A

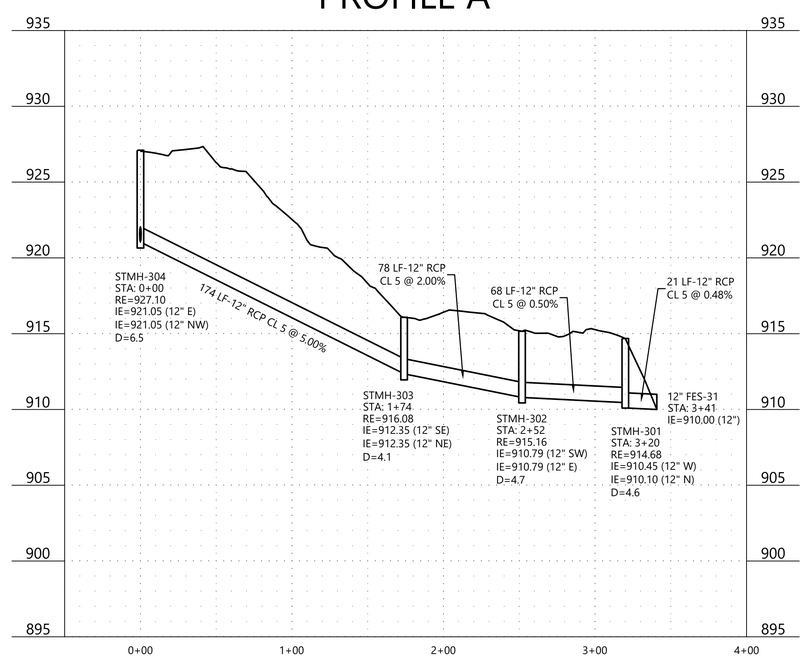

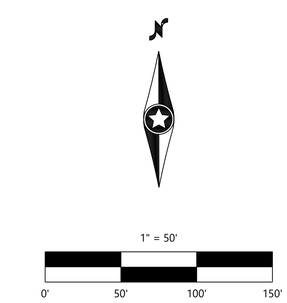

CONSTRUCTION PLANS

OAK CREEK 2ND ADDITION

N:\0024429.02\DWG\CIVIL\UTILITY\0024429.025-ST.DWG

DESIGNED:	FDH II
CHECKED:	FDH II
DRAWN:	KFP/DJW
HORIZONTAL SCALE:	50'
VERTICAL SCALE:	10' OR 5'

INITIAL ISSUE: 02/07/23
REVISIONS:
△ . .
△ . .
△ . .
△ . .
△ . .

PREPARED FOR:

DR HORTON, INC. - MINNESOTA
20860 KENBRIDGE COURT, SUITE 100
LAKEVILLE, MINNESOTA 55044

I HEREBY CERTIFY THAT THIS PLAN WAS PREPARED BY ME OR UNDER MY DIRECT SUPERVISION AND THAT I AM A DULY LICENSED PROFESSIONAL ENGINEER UNDER THE LAWS OF THE STATE OF MINNESOTA.
FRANCIS D. HAGEN
DATE: 02/07/23 LICENSE NO. 17716

OAK CREEK 2ND ADDITION
CHASKA, MN

Westwood
Phone (952) 937-5150 12701 Whitewater Drive, Suite #300
Fax (952) 937-5822 Minnetonka, MN 55343
Toll Free (888) 937-5150 westwoodps.com
Westwood Professional Services, Inc.

STORM SEWER AND STREET CONSTRUCTION PLAN

PROJECT NUMBER: 0024429.02

SHEET NUMBER: 8 OF 20
DATE: 02/07/23

© 2022 Westwood Professional Services, Inc.

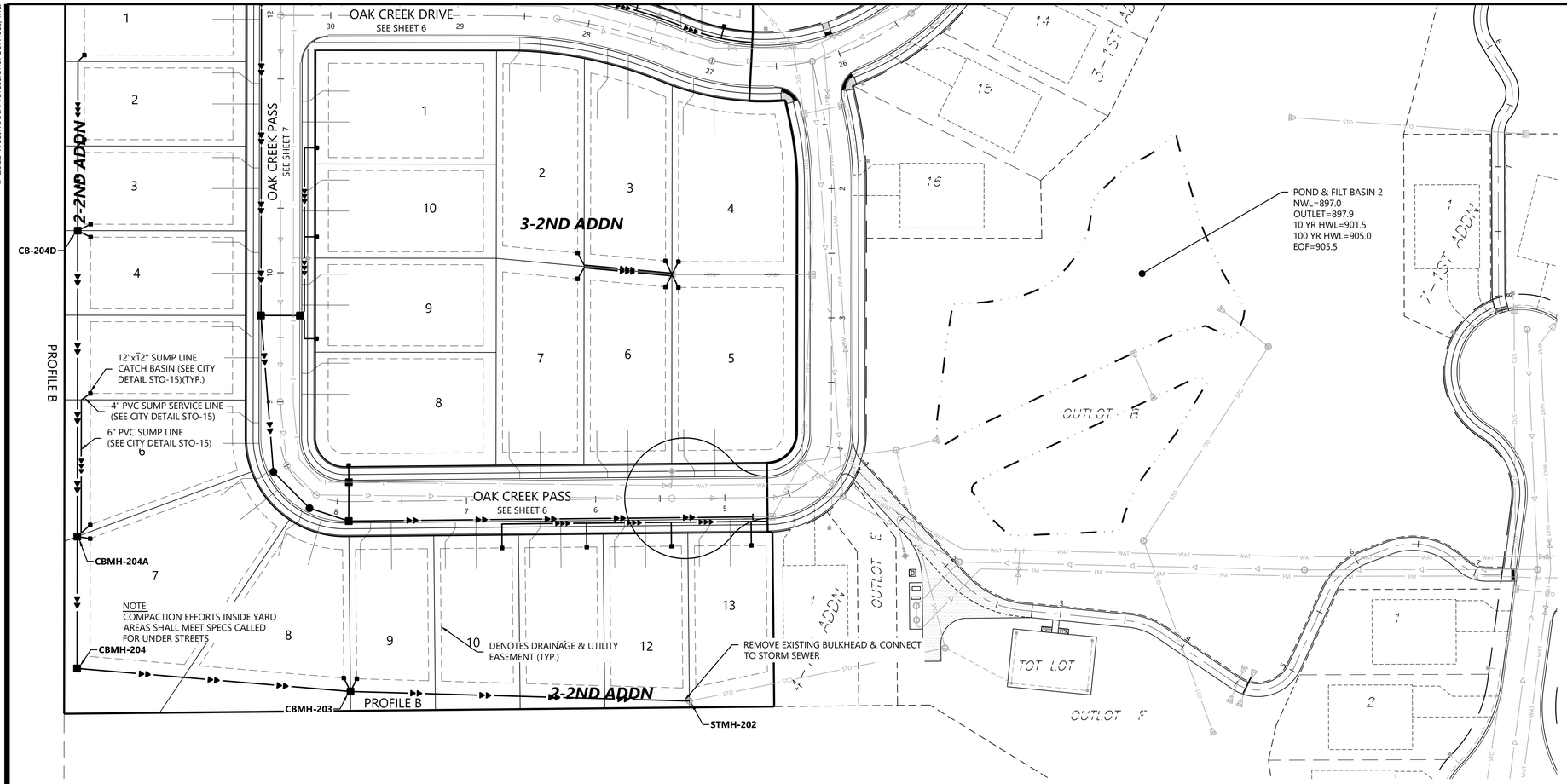

Call 48 Hours before digging:
811 or call811.com
Common Ground Alliance

LEGEND

EXISTING	PROPOSED	
× 900.00	× 900.00	GUTTER ELEVATION

GENERAL NOTES

1. RADIUS TO BE B618 CURB & GUTTER WITH 10' TRANSITIONS FROM SURMOUNTABLE CURB & GUTTER.
2. ALL RCP SHALL BE CLASS 5, UNLESS OTHERWISE NOTED.
3. ALL CATCH BASIN CASTINGS IN CURB SHALL BE SUMPED 0.15 FEET. MANHOLE CASTINGS IN PAVED AREAS SHALL BE SUMPED 0.05 FEET. RIM ELEVATIONS SHOWN ON THE PROFILES REFLECT THE SUMPED ELEVATIONS.
4. INVERTS & DOGHOUSES SHALL BE POURED/GROUTED WITHIN 2 DAYS AFTER STRUCTURE INSTALLATION

PROFILE B

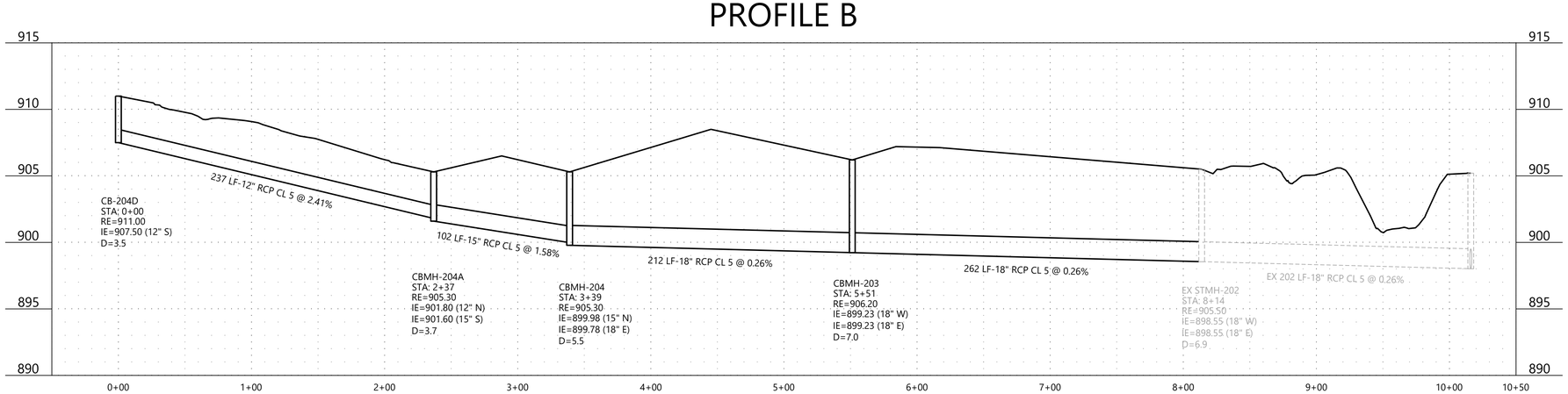

1" = 50'
0' 50' 100' 150'

CONSTRUCTION PLANS

OAK CREEK 2ND ADDITION

N:\0024429.02\DWG\CIVIL\UTILITY\0024429.02S-ST.DWG

DESIGNED:	FDH II
CHECKED:	FDH II
DRAWN:	KFP/DJW
HORIZONTAL SCALE:	50'
VERTICAL SCALE:	10' OR 5'

INITIAL ISSUE: 02/07/23
REVISIONS:

PREPARED FOR:

DR HORTON, INC. - MINNESOTA
20860 KENBRIDGE COURT, SUITE 100
LAKEVILLE, MINNESOTA 55044

I HEREBY CERTIFY THAT THIS PLAN WAS PREPARED BY ME OR UNDER MY DIRECT SUPERVISION AND THAT I AM A DULY LICENSED PROFESSIONAL ENGINEER UNDER THE LAWS OF THE STATE OF MINNESOTA.
FRANCIS D. HAGEN
DATE: 02/07/23 LICENSE NO. 17716

OAK CREEK 2ND ADDITION
CHASKA, MN

Westwood
Phone (952) 937-5150 12701 Whitewater Drive, Suite #300
Fax (952) 937-5822 Minnetonka, MN 55343
Toll Free (888) 937-5150 westwoodps.com
Westwood Professional Services, Inc.

STORM SEWER CONSTRUCTION PLAN
PROJECT NUMBER: 0024429.02

SHEET NUMBER: 9 OF 20
DATE: 02/07/23

© 2022 Westwood Professional Services, Inc.

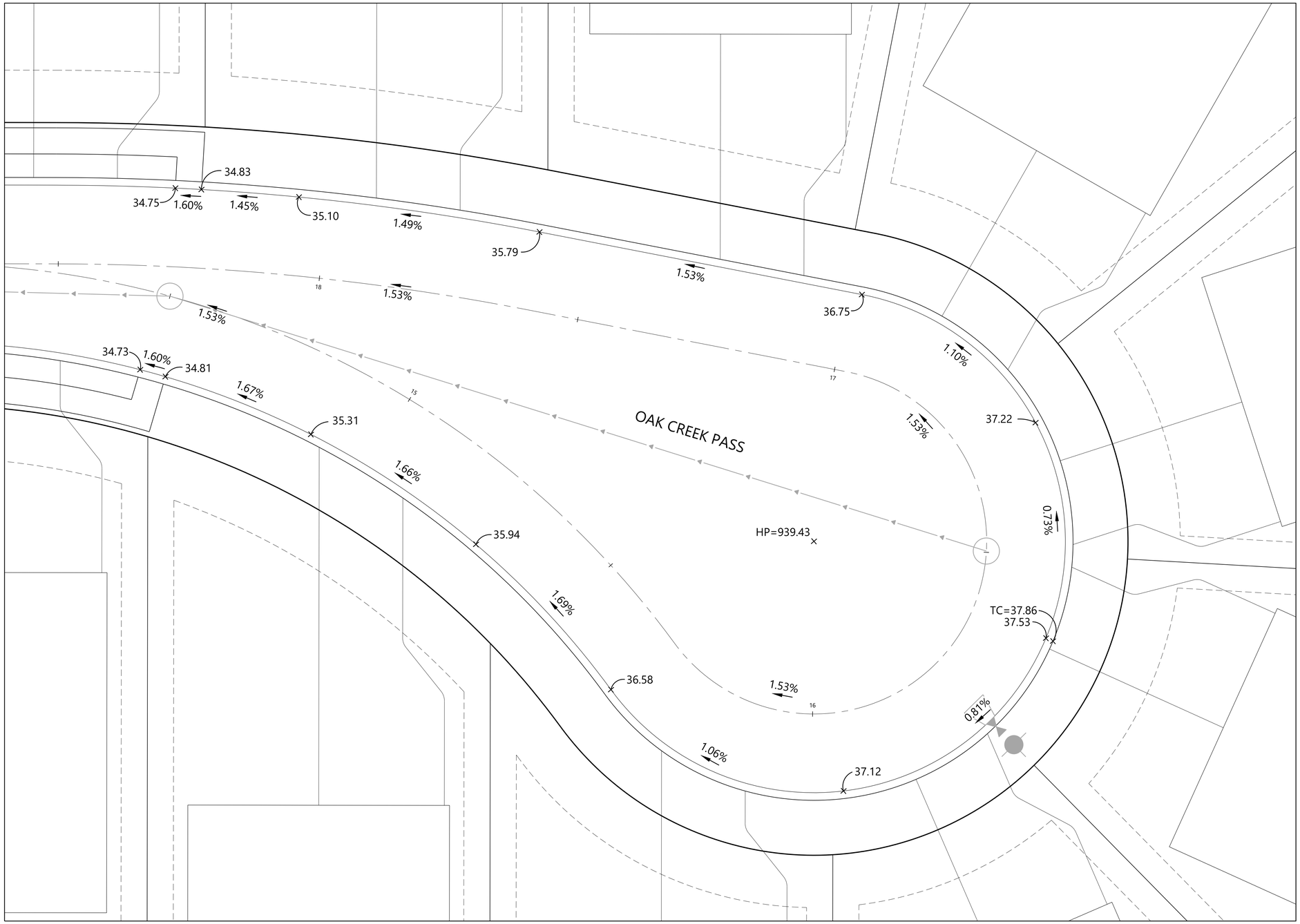

Call 48 Hours before digging:
811 or call811.com
Common Ground Alliance

LEGEND

EXISTING	PROPOSED	
× 900.00	× 900.00	GUTTER ELEVATION
	× TC 900.00	TOP OF CURB ELEVATION
	0.00%	FLOW DIRECTION
		FLOW LINE
		BACK OF CURB
STD		STORM SEWER
		LANDING AREA - MINIMUM AND MAXIMUM 2.0% SLOPE IN ALL DIRECTIONS
		TRUNCATED DOMES

0' 10' 20' 30'

OAK CREEK 2ND ADDITION

N:\0024429.02\DWG\CIVIL\UTILITY\0024429.02S-ID.DWG

DESIGNED:	FDH II
CHECKED:	FDH II
DRAWN:	KFP/DJW
HORIZONTAL SCALE:	10'
VERTICAL SCALE:	

INITIAL ISSUE: 02/07/23
REVISIONS:
1 . .
2 . .
3 . .
4 . .
5 . .

PREPARED FOR:

DR HORTON, INC. - MINNESOTA

20860 KENBRIDGE COURT, SUITE 100
LAKEVILLE, MINNESOTA 55044

I HEREBY CERTIFY THAT THIS PLAN WAS PREPARED BY ME OR UNDER MY DIRECT SUPERVISION AND THAT I AM A DULY LICENSED PROFESSIONAL ENGINEER UNDER THE LAWS OF THE STATE OF MINNESOTA.

FRANCIS D. HAGEN II

FRANCIS D. HAGEN

DATE: 02/07/23 LICENSE NO. 17716

OAK CREEK 2ND ADDITION

CHASKA, MN

Westwood

Phone (952) 937-5150 12701 Whitewater Drive, Suite #300
Fax (952) 937-5822 Minnetonka, MN 55343
Toll Free (888) 937-5150 westwoodps.com

Westwood Professional Services, Inc.

INTERSECTION DETAILS

PROJECT NUMBER: 0024429.02

SHEET NUMBER: 10 OF 20

DATE: 02/07/23

© 2022 Westwood Professional Services, Inc.

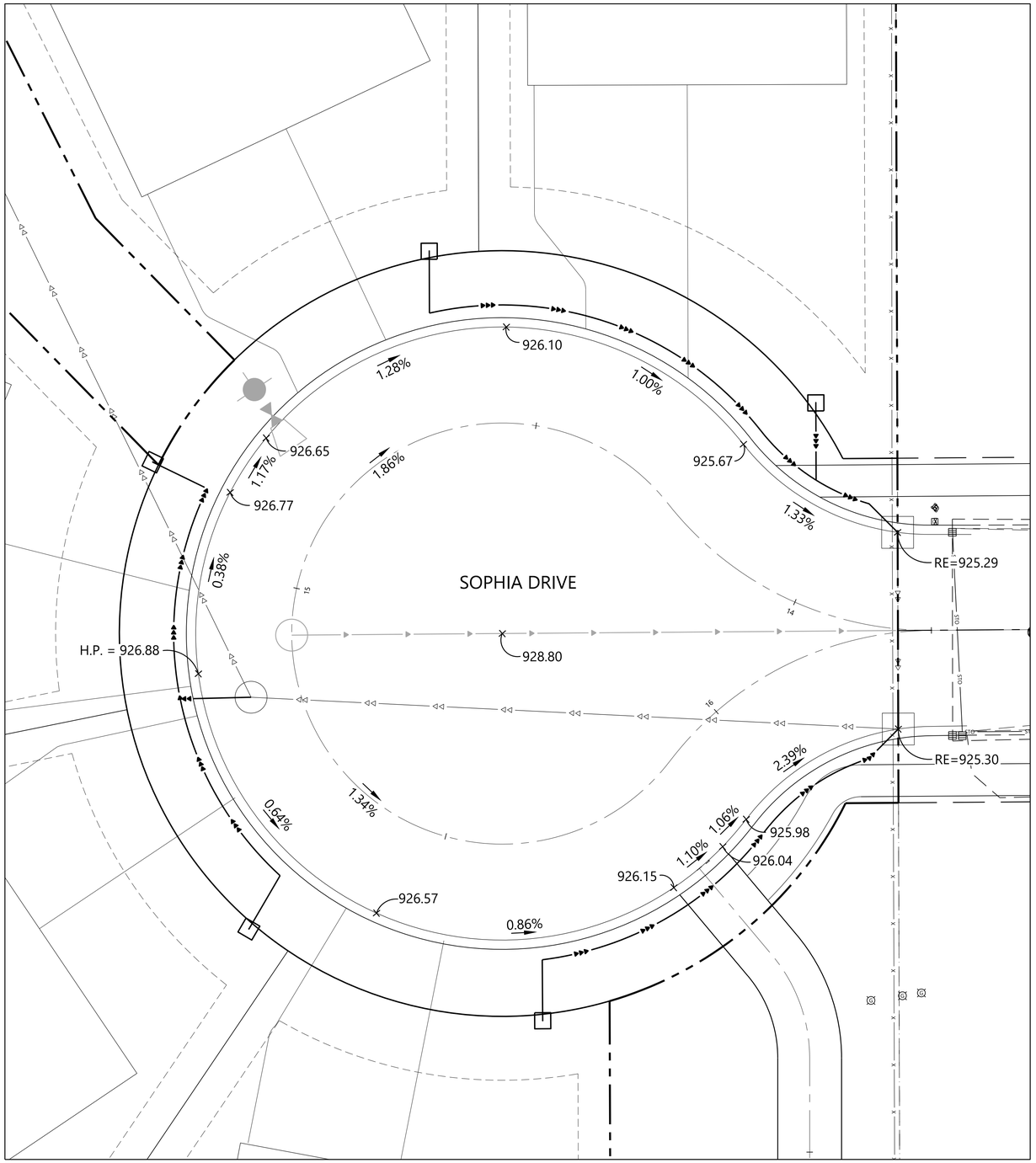

Call 48 Hours before digging:
811 or call811.com
Common Ground Alliance

LEGEND

EXISTING	PROPOSED	
× 900.00	× 900.00	GUTTER ELEVATION
	× TC 900.00	TOP OF CURB ELEVATION
	0.00%	FLOW DIRECTION
		FLOW LINE
		BACK OF CURB
STD		STORM SEWER
		LANDING AREA - MINIMUM AND MAXIMUM 2.0% SLOPE IN ALL DIRECTIONS
		TRUNCATED DOMES

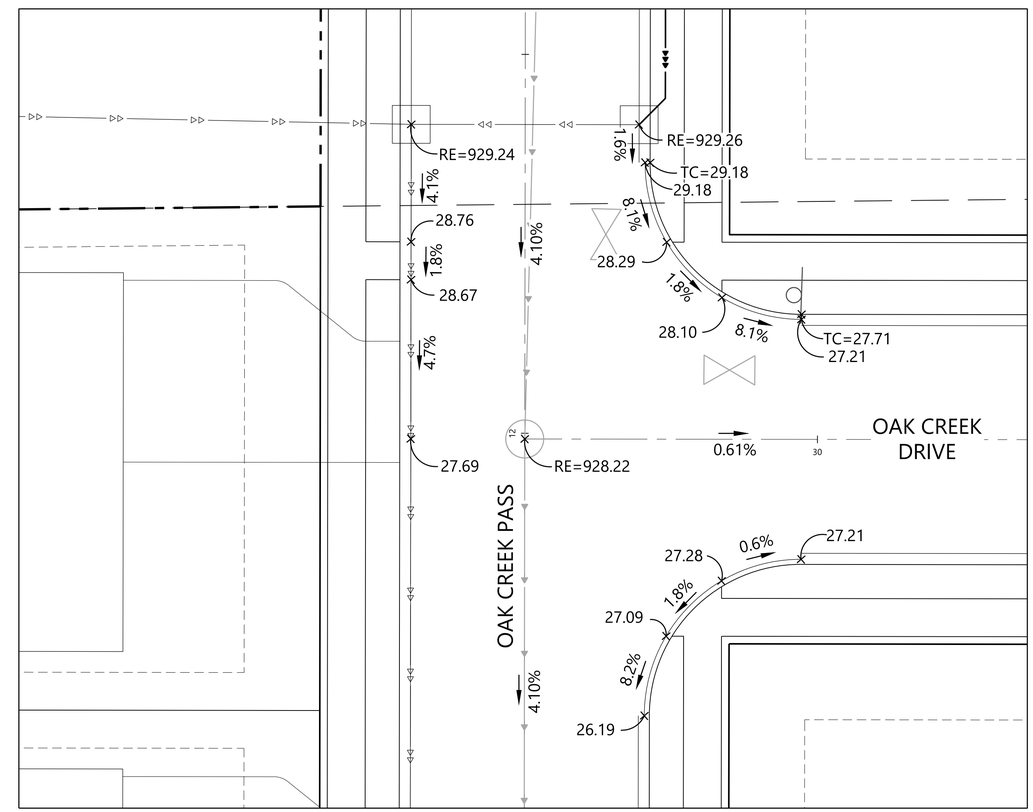

0' 10' 20' 30'

N:\0024429.02\DWG\CIVIL\UTILITY\0024429.025-ID.DWG

OAK CREEK 2ND ADDITION

DESIGNED:	FDH II
CHECKED:	FDH II
DRAWN:	KFP/DJW
HORIZONTAL SCALE:	10'
VERTICAL SCALE:	

INITIAL ISSUE: 02/07/23
REVISIONS:

PREPARED FOR:

DR HORTON, INC. - MINNESOTA
20860 KENBRIDGE COURT, SUITE 100
LAKEVILLE, MINNESOTA 55044

I HEREBY CERTIFY THAT THIS PLAN WAS PREPARED BY ME OR UNDER MY DIRECT SUPERVISION AND THAT I AM A DULY LICENSED PROFESSIONAL ENGINEER UNDER THE LAWS OF THE STATE OF MINNESOTA.
FRANCIS D. HAGEN
DATE: 02/07/23 LICENSE NO. 17716

OAK CREEK 2ND ADDITION
CHASKA, MN

Westwood
Phone (952) 937-5150 12701 Whitewater Drive, Suite #300
Fax (952) 937-5822 Minnetonka, MN 55343
Toll Free (888) 937-5150 westwoodps.com
Westwood Professional Services, Inc.

INTERSECTION DETAILS

PROJECT NUMBER: 0024429.02

SHEET NUMBER: 11 OF 20
DATE: 02/07/23

© 2022 Westwood Professional Services, Inc.

Call 48 Hours before digging:
811 or call811.com
Common Ground Alliance

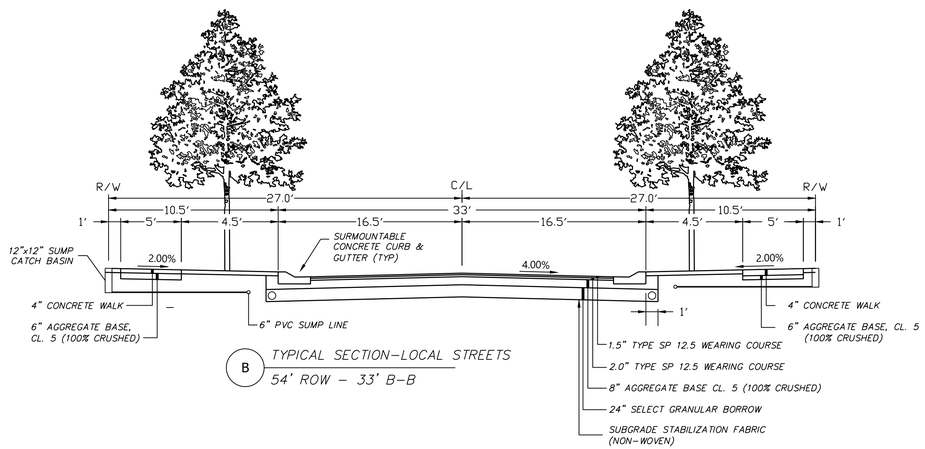

B TYPICAL SECTION–LOCAL STREETS
54' ROW – 33' B–B

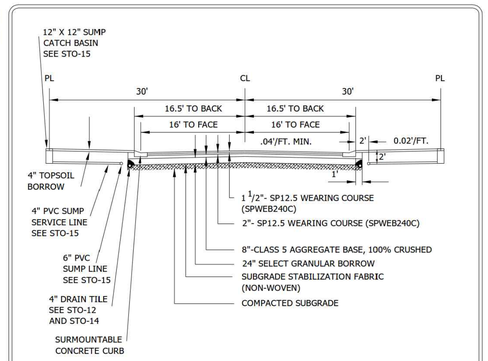

STANDARD STREET SECTION (7 TON)

NOTES:
1. ALL ORGANIC OR OTHER UNSUITABLE MATERIALS SHALL BE REMOVED FROM BENEATH THE ROADWAY.
2. A TEST ROLL OF THE PREPARED SUBGRADE SHALL BE PERFORMED BY THE OWNER IN THE PRESENCE OF A CITY INSPECTOR. THE CITY HAS THE AUTHORITY TO REQUIRE ADDITIONAL SUBGRADE CORRECTION OR ELIMINATE THE STABILIZATION FABRIC.
3. THE CITY RESERVES THE RIGHT TO MODIFY STREET SECTION AS REQUIRED.
4. NO CONCRETE WORK OR BITUMINOUS PAVING SHALL OCCURE AFTER OCTOBER 31ST UNLESS AUTHORIZED BY THE CITY OF CHASKA.
5. STREET WIDTH TO BE DETERMINED BY PROJECTED TRAFFIC VOLUMES.
6. RECYCLE MATERIAL ACCEPTED AS CLASS 5 AGGREGATE BASE SUBSTITUTE IF MEETING GUIDELINES.

Stantec
2335 Highway 36 W
St. Paul, MN 55113
www.stantec.com

TYPICAL SECTIONS FOR RESIDENTIAL STREETS 7 TON SECTION

CHASKA, MINNESOTA

LAST REVISION: JUNE 2012

PLATE NO. STR-7

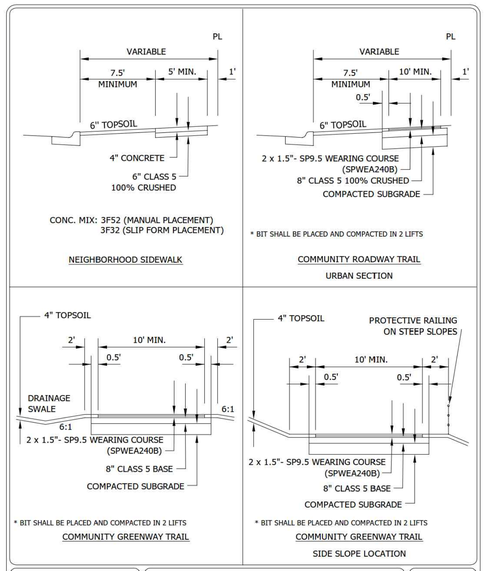

Stantec
2335 Highway 36 W
St. Paul, MN 55113
www.stantec.com

TYPICAL PLACEMENT AND SECTION FOR WALKS AND TRAILS

CHASKA, MINNESOTA

LAST REVISION: APRIL 2016

PLATE NO. STR-9

N:\0024429.02\DWG\CIVIL\UTILITY\0024429.025.DT.DWG

OAK CREEK 2ND ADDITION

DESIGNED: FDH II
CHECKED: FDH II
DRAWN: KFP/DJW
HORIZONTAL SCALE:
VERTICAL SCALE:

INITIAL ISSUE: 02/07/23
REVISIONS:

PREPARED FOR:

DR HORTON, INC. - MINNESOTA
20860 KENBRIDGE COURT, SUITE 100
LAKEVILLE, MINNESOTA 55044

I HEREBY CERTIFY THAT THIS PLAN WAS PREPARED BY ME OR UNDER MY DIRECT SUPERVISION AND THAT I AM A DULY LICENSED PROFESSIONAL ENGINEER UNDER THE LAWS OF THE STATE OF MINNESOTA.
FRANCIS D. HAGEN
DATE: 02/07/23 LICENSE NO. 17716

OAK CREEK 2ND ADDITION
CHASKA, MN

Westwood
Phone (952) 937-5150 12701 Whitewater Drive, Suite #300
Fax (952) 937-5822 Minnetonka, MN 55343
Toll Free (888) 937-5150 westwoodps.com
Westwood Professional Services, Inc.

TYPICAL STREET SECTIONS

PROJECT NUMBER: 0024429.02

SHEET NUMBER: 12 OF 20

DATE: 02/07/23

© 2022 Westwood Professional Services, Inc.

Call 48 Hours before digging:
811 or call811.com
Common Ground Alliance

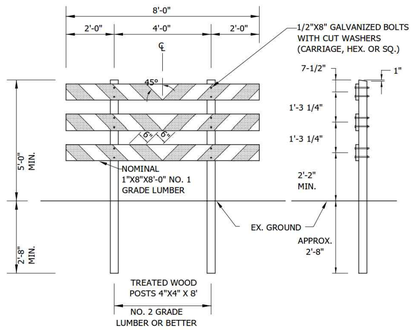

NOTE
THE BARRICADE BOARD FACE SURFACES SHALL BE FULLY REFLECTORIZED IN ALTERNATE SILVER-WHITE AND RED STRIPING, USING A REFLECTIVE SHEETING CONFORMING TO THE REQUIREMENTS OF MNDOT SPEC. 3352.

PRIOR TO INSTALLING THE REFLECTIVE SHEETING, THE BARRICADE BOARDS SHALL BE GIVEN A COMPLETE COATING OF WHITE WOOD PRIMER PAINT FOLLOWED BY A SECOND COAT OF WHITE EXTERIOR APPLIED ONLY TO THE SURFACES NOT COVERED WITH REFLECTIVE SHEETING.

THE BARRICADE BOARDS SHALL BE COMPLETELY PAINTED AND REFLECTORIZED SHEETING APPLIED BEFORE BEING INSTALLED ON THE POSTS.

THE PLACEMENT OF THE BARRICADE SHALL BE 10'-0" FROM THE END OF THE BITUMINOUS ROAD WITH THE BARRICADE CENTERED ON THE ROADWAY FACING THE FLOW OF TRAFFIC.

Stantec
2335 Highway 36 W
St. Paul, MN 55113
www.stantec.com

PERMANENT BARRICADE
CHASKA, MINNESOTA

LAST REVISION: MARCH 2008
PLATE NO. GEN-4

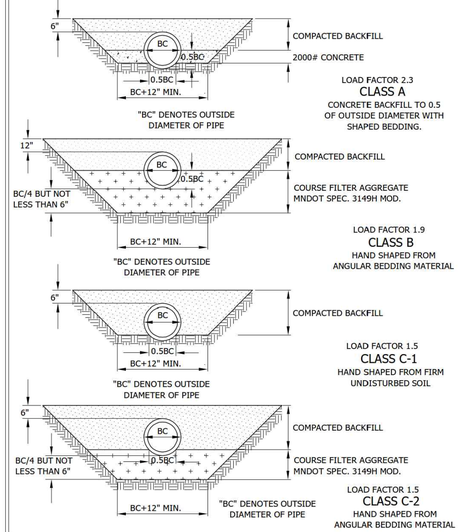

Stantec
2335 Highway 36 W
St. Paul, MN 55113
www.stantec.com

BEDDING METHODS FOR RCP OR DIP
CHASKA, MINNESOTA

LAST REVISION: MARCH 2001
PLATE NO. GEN-6

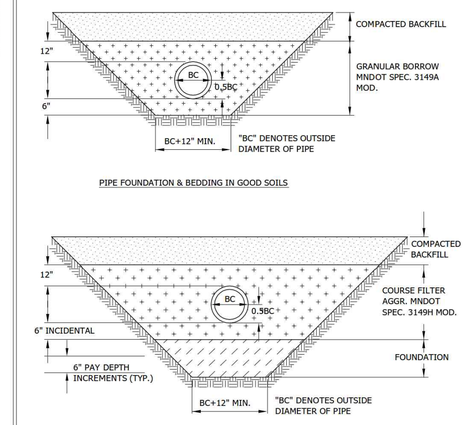

Stantec
2335 Highway 36 W
St. Paul, MN 55113
www.stantec.com

BEDDING METHODS FOR PVC
CHASKA, MINNESOTA

LAST REVISION: MARCH 2008
PLATE NO. GEN-7

NOTE: WATER MAIN BURIED LESS THAN 7.5' TO BE APPROVED BY OWNER

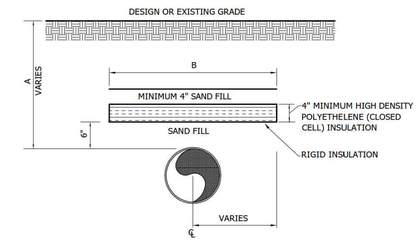

NOTE: PIPE SHALL BE CENTERED UNDER INSULATION UNLESS OTHERWISE SPECIFIED. STAGGER/ OFFSET JOINTS 2' MINIMUM BETWEEN SHEET LAYERS.

COVER OVER PIPE - A	WIDTH OF INSULATING BOARD - B
2'	11'
3'	9'
4'	7'
5'	5'
6'	3'

Stantec
2335 Highway 36 W
St. Paul, MN 55113
www.stantec.com

INSULATION DETAIL
CHASKA, MINNESOTA

LAST REVISION: APRIL 2016
PLATE NO. GEN-8

PRECAST INVERT WITH A MINIMUM 1% THROUGH SLOPE REQUIRED.

PRECAST INVERT MUST BE 1/2 DIAMETER OF THE PIPE AND BENCHES SLOPED 2" TOWARD THE INVERT.

FRAME	A	B
R1642-2310B	27"	7"
R1755G	27"	7"

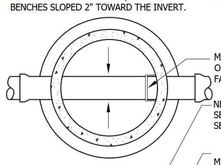

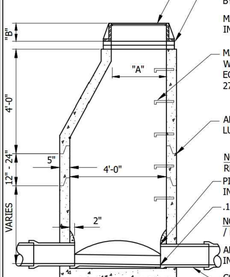

MANHOLE STEPS SHALL BE PLACED SO THAT OFFSET VERTICAL PORTION OF CONE IS FACING DOWNSTREAM.

NEENAH COVER **R-1642-5001**, LETTERED "SANITARY SEWER" WITH 2 CONCEALED PICK HOLES AND SELF SEALING LID. SEE SPECIFICATION FOR CASTING NUMBER.

MINIMUM OF 2 MAXIMUM OF 4 ADJUSTMENT RINGS. FINAL RING MATERIAL AND ADHESIVE TO BE SPECIFIED BY OWNER ON A PROJECT BASIS.

MAXIMUM 20"ADJUSTMENT ALLOWED INCLUDING RINGS AND CASTING.

MANHOLE STEPS, COPOLYMER POLYPROPYLENE PLASTIC, WITH 1/2" GRADE 60 STEEL REINFORCEMENT OR EQUAL, 16" ON CENTER. (NO STEPS ALLOWED IN UPPER 27" BARREL)

ALL JOINTS IN MANHOLE TO HAVE SELF LUBRICATING RUBBER GASKETS AND RAMNECK.

NOTE: ALL INFILTRATION AREAS SHALL BE REPAIRED UNTIL MANHOLE IS WATER TIGHT.

PIPE SHALL BE CUT 2" FROM INSIDE FACE OF WALL.

.1' DROP ACROSS INVERTS MIN.

NOTE: KOR-N-SEAL MANHOLE TO BE USED FOR PIPE / MANHOLE CONNECTION.

ALL DOG HOUSES SHALL BE GROUTED ON INSIDE OF MANHOLE.

COMPACT TO TOP OF PIPE, TO FIRST JOINT.

MINIMUM THICKNESS OF PRECAST BASE IS 6" FOR 14' DEEP OR LESS, AND INCREASES 1" IN THICKNESS FOR EVERY 4' OF DEPTH GREATER THAN 14'.

OUTER SURFACE OF ALL PRE-CAST SECTIONS SHALL RECEIVE 2 COATS OF BITUMINOUS DAMP PROOFING (SEE ENGINEERING GUIDELINES OR PROJECT SPECIFICATIONS FOR MORE DETAILS) .

Stantec
2335 Highway 36 W
St. Paul, MN 55113
www.stantec.com

SANITARY SEWER MANHOLE
CHASKA, MINNESOTA

LAST REVISION: MARCH 2018
PLATE NO. SAN-1

PRECAST INVERT WITH A MINIMUM 1% THROUGH SLOPE REQUIRED.

PRECAST INVERT MUST BE 1/2 DIAMETER OF THE PIPE AND BENCHES SLOPED 2" TOWARD THE INVERT.

OUTER SURFACE OF ALL PRE-CAST SECTIONS SHALL RECEIVE 2 COATS OF BITUMINOUS DAMP PROOFING (SEE ENGINEERING GUIDELINES OR PROJECT SPECIFICATIONS FOR MORE DETAILS) .

FRAME	A	B
R16420245	27"	7"
R1755G	27"	7"

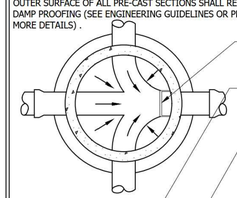

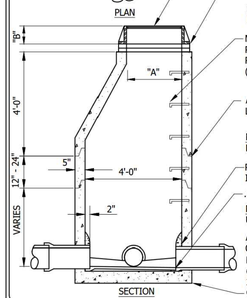

MANHOLE STEPS SHALL BE PLACED SO THAT OFFSET VERTICAL PORTION OF CONE IS FACING DOWNSTREAM.

NEENAH COVER **R1642-5001**, LETTERED "SANITARY SEWER" WITH 2 CONCEALED PICK HOLES AND SELF SEALING LID. SEE SPECIFICATIONS FOR CASTING NUMBER

MINIMUM OF 2 MAXIMUM OF 4 ADJUSTING RINGS. FINAL RING MATERIAL AND ADHESIVE TO BE SPECIFIED BY OWNER ON A PROJECT BASIS.

MAXIMUM 20" ADJUSTMENT ALLOWED INCLUDING RINGS AND CASTING

MANHOLE STEPS, COPOLYMER POLYPROPYLENE PLASTIC, WITH 1/2" GRADE 60 STEEL REINFORCEMENT OR EQUAL, 16" ON CENTER. (NO STEPS ALLOWED IN UPPER 27" BARREL)

ALL JOINTS IN MANHOLE TO HAVE SELF LUBRICATING RUBBER GASKETS AND RAMNECK.

NOTE: ALL INFILTRATION AREAS SHALL BE REPAIRED UNTIL MANHOLE IS WATER TIGHT.

PIPE SHALL BE CUT OUT 2" FROM INSIDE FACE OF WALL.

.1' DROP ACROSS INVERTS (MIN.)

NOTE: KOR-N-SEAL MANHOLE TO BE USED FOR PIPE / MANHOLE CONNECTION.

ALL DOG HOUSES SHALL BE GROUTED ON INSIDE OF MANHOLE.

MINIMUM THICKNESS OF PRECAST BASE IS 6" FOR 14' DEEP OR LESS, AND INCREASES 1" IN THICKNESS FOR EVERY 4' OF DEPTH GREATER THAN 14'.

Stantec
2335 Highway 36 W
St. Paul, MN 55113
www.stantec.com

SANITARY SEWER JUNCTION MANHOLE
CHASKA, MINNESOTA

LAST REVISION: MARCH 2018
PLATE NO. SAN-2

FRAME	A	B
R1642-2310B	27"	7"
R1755G	27"	7"

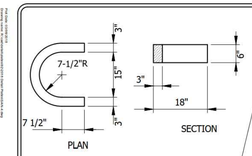

HORSESHOE DETAILS

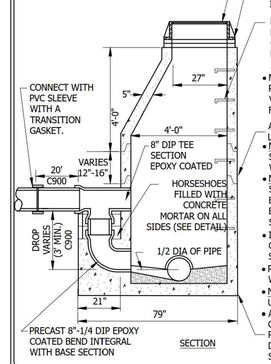

NEENAH COVER **R-1642-5001**, LETTERED "SANITARY SEWER", WITH 2 CONCEALED PICK HOLES AND SELF SEALING LID. SEE SPECS. FOR CASTING NUMBERS.

MINIMUM OF 2 MAXIMUM OF 4 ADJUSTMENT RINGS. FINAL RING MATERIAL AND ADHESIVE TO BE SPECIFIED BY OWNER ON A PROJECT BASIS.

- MAXIMUM 20" ADJUSTMENT ALLOWED INCLUDING RINGS AND CASTING.

MANHOLE STEPS, COPOLYMER POLYPROPYLENE PLASTIC, WITH 1/2" GRADE 60 STEEL REINFORCEMENT OR EQUAL 16" ON CENTER. (NO STEPS ALLOWED IN UPPER 27" BARREL.)

- MANHOLE STEPS SHALL BE PLACED SO THAT OFFSET VERTICAL PORTION OF CONE IS FACING DOWNSTREAM.

ALL JOINTS IN MANHOLE TO HAVE SELF LUBRICATING RUBBER GASKETS AND RAMNECK.

- NOTE: ALL INFILTRATION AREAS SHALL BE REPAIRED UNTIL MANHOLE IS WATER TIGHT.
- NOTE: OUTER SURFACE OF ALL PRE-CAST SECTIONS SHALL RECEIVE 2 COATS OF BITUMINOUS DAMP PROOFING (SEE ENGINEERING GUIDELINES OR PROJECT SPECIFICATIONS FOR MORE DETAILS).
- INTERIOR MANHOLE WALL SHALL BE COMPLETELY LINED WITH HDPE, SEE SPEC FOR MORE DETAILS.
- PIPE SHALL BE CUT OUT FLUSH WITH INSIDE FACE OF WALL.
- NOTE: KOR-N-SEAL MANHOLE TO BE USED FOR PIPE / MANHOLE CONNECTION.
- ALL DOG HOUSES SHALL BE GROUTED ON INSIDE OF MANHOLE.
- PRECAST INVERT SHOULD BE 1/2 DIAMETER OF PIPE AND BENCHES SLOPED 2" TOWARD INVERT.

Stantec
2335 Highway 36 W
St. Paul, MN 55113
www.stantec.com

SANITARY SEWER DROP INLET MANHOLE
CHASKA, MINNESOTA

LAST REVISION: MARCH 2018
PLATE NO. SAN-4

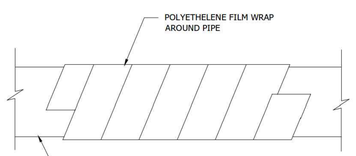

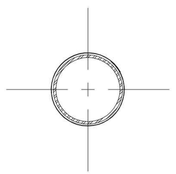

PIPE SECTION

Stantec
2335 Highway 36 W
St. Paul, MN 55113
www.stantec.com

TYPICAL FORCEMAIN INSTALLATION
CHASKA, MINNESOTA

LAST REVISION: APRIL 2004
PLATE NO. SAN-7

N:\0024429.02\DWG\CIVIL\UTILITY\0024429.02S-DT.DWG

OAK CREEK 2ND ADDITION

DESIGNED: FDH II
CHECKED: FDH II
DRAWN: KFP/DJW
HORIZONTAL SCALE:
VERTICAL SCALE:

INITIAL ISSUE: 02/07/23
REVISIONS:

PREPARED FOR:

DR HORTON, INC. - MINNESOTA
20860 KENBRIDGE COURT, SUITE 100
LAKEVILLE, MINNESOTA 55044

I HEREBY CERTIFY THAT THIS PLAN WAS PREPARED BY ME OR UNDER MY DIRECT SUPERVISION AND THAT I AM A DULY LICENSED PROFESSIONAL ENGINEER UNDER THE LAWS OF THE STATE OF MINNESOTA.
FRANCIS D. HAGEN
DATE: 02/07/23 LICENSE NO. 17716

OAK CREEK 2ND ADDITION
CHASKA, MN

Westwood
Phone (952) 937-5150 12701 Whitewater Drive, Suite #300
Fax (952) 937-5822 Minnetonka, MN 55343
Toll Free (888) 937-5150 westwoodps.com
Westwood Professional Services, Inc.

DETAILS

PROJECT NUMBER: 0024429.02

SHEET NUMBER: 13 OF 20
DATE: 02/07/23

© 2022 Westwood Professional Services, Inc.

Call 48 Hours before digging:
811 or call811.com
Common Ground Alliance

NOTES: CORE BLUE BOLTS REQUIRED FOR ALL MECHANICAL FITTINGS. ANTI-CORROSIVE COATING REQUIRED ON ALL BOLTS AND TIE ROD ASSEMBLIES.

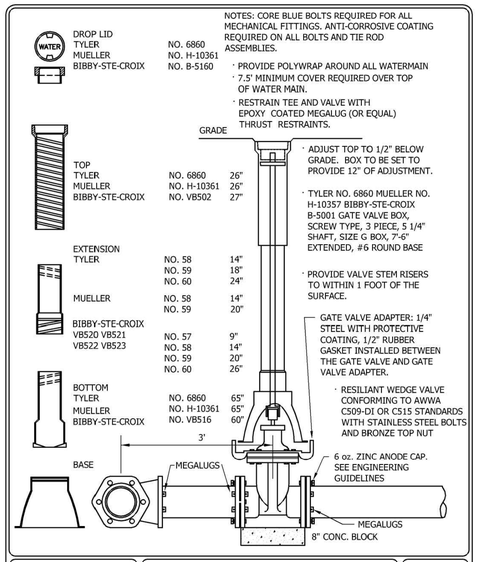

Stantec
733 Marquette Ave Suite 1000
Minneapolis, MN 55402
www.stantec.com

GATE VALVE AND BOX INSTALLATION

CHASKA, MINNESOTA

LAST REVISION: MARCH 2019

PLATE NO. WAT-1

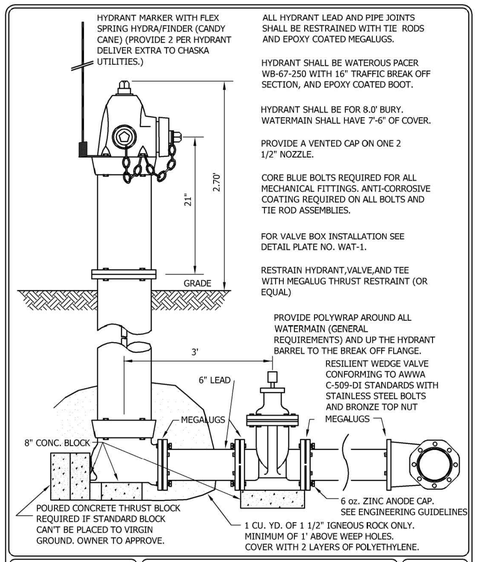

ALL HYDRANT LEAD AND PIPE JOINTS SHALL BE RESTRAINED WITH TIE RODS AND EPOXY COATED MEGALUGS.

HYDRANT SHALL BE WATEROUS PACER WB-67-250 WITH 16" TRAFFIC BREAK OFF SECTION, AND EPOXY COATED BOOT.

HYDRANT SHALL BE FOR 8.0' BURY. WATERMAIN SHALL HAVE 7'-6" OF COVER.

PROVIDE A VENTED CAP ON ONE 2 1/2" NOZZLE.

CORE BLUE BOLTS REQUIRED FOR ALL MECHANICAL FITTINGS. ANTI-CORROSIVE COATING REQUIRED ON ALL BOLTS AND TIE ROD ASSEMBLIES.

FOR VALVE BOX INSTALLATION SEE DETAIL PLATE NO. WAT-1.

RESTRAIN HYDRANT,VALVE,AND TEE WITH MEGALUG THRUST RESTRAINT (OR EQUAL)

PROVIDE POLYWRAP AROUND ALL WATERMAIN (GENERAL REQUIREMENTS) AND UP THE HYDRANT BARREL TO THE BREAK OFF FLANGE.

RESILIENT WEDGE VALVE CONFORMING TO AWWA C-509-DI STANDARDS WITH STAINLESS STEEL BOLTS AND BRONZE TOP NUT

Stantec
733 Marquette Ave Suite 1000
Minneapolis, MN 55402
www.stantec.com

WATEROUS PACER HYDRANT AND VALVE INSTALLATION

CHASKA, MINNESOTA

LAST REVISION: MARCH 2019

PLATE NO. WAT-2

NOTES:
1. SHAPE OF BACK OF BUTTRESS MAY VARY AS LONG AS POURED AGAINST FIRM UNDISTURBED EARTH.
2. DIMENSION C1,C2,C3 SHOULD BE LARGE ENOUGH TO MAKE ANGLE Θ EQUAL TO OR LARGER THAN 45°.
3. DIMENSION A1,A2,A3 SHOULD BE AS LARGE AS POSSIBLE WITHOUT INTERFERING WITH MJ BOLTS.
4. PROVIDE POLYETHYLENE WRAP AROUND ALL WATERMAIN.
5. ALL BENDS AND FITTINGS SHALL BE RESTRAINED WITH BOTH EPOXY COATED MEGA-LUGS AND THRUST BLOCKING.

BUTTRESS DIMENSIONS

PIPE SIZE	22 1/2° BEND		45° BEND		90° BEND	
	B_1	D_1	B_2	D_2	B_3	D_3
6"	1'-5"	1'-5"	1'-5"	1'-5"	2'-1"	1'-6"
8"	1'-5"	1'-5"	2'-1"	1'-6"	2'-8"	2'-0"
12"	1'-10"	1'-10"	3'-4"	2'-0"	4'-9"	2'-6"
16"	3'-0"	2'-0"	3'-10"	3'-0"	6'-2"	3'-6"
20"	3'-6"	2'-8"	5'-6'	3'-4"	8'-4"	4'-0"
24"	4'-4"	3'-0"	6'-10"	3'-10"	9'-8"	5'-0"
30"	-	-	9'-3"	6'-0"	17'-0"	6'-0"

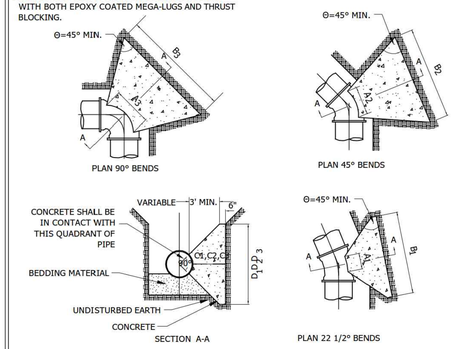

Stantec
2335 Highway 36 W
St. Paul, MN 55113
www.stantec.com

CONCRETE THRUST BLOCKING

CHASKA, MINNESOTA

LAST REVISION: APRIL 2005

PLATE NO. WAT-4

NOTES: CORE BLUE BOLTS REQUIRED FOR ALL MECHANICAL FITTINGS. ANTI-CORROSIVE COATING REQUIRED ON ALL BOLTS AND TIE ROD ASSEMBLIES.

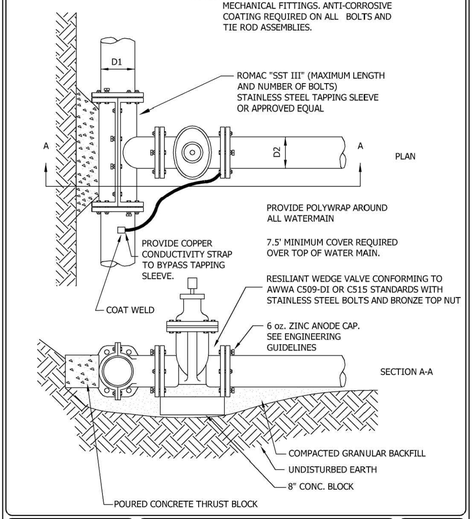

Stantec
733 Marquette Ave Suite 1000
Minneapolis, MN 55402
www.stantec.com

WATER MAIN WET TAP

CHASKA, MINNESOTA

LAST REVISION: MARCH 2019

PLATE NO. WAT-5

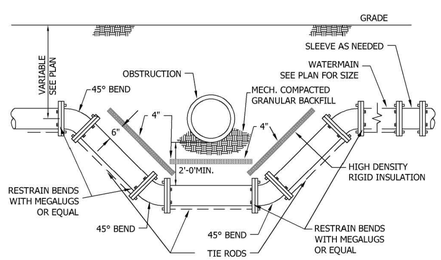

1. USE EPOXY COATED MEGALUG THRUST RESTRAINTS AND COATED TIE RODS ON ALL JOINTS AND FITTINGS. CORE BLUE BOLTS REQUIRED ON ALL MECHANICAL JOINTS.
2. RESTRAIN A MINIMUM OF TWO PIPE JOINTS (40 LF) LEFT AND RIGHT OF THE LOWERING.
3. SEE PLATE NO. GEN-11 TO DETERMINE THE WIDTH OF THE INSULATING BOARD REQUIRED
4. SEE PLATE NO. WAT-4 TO DETERMINE THE REQUIRED CONCRETE THRUST BLOCKING.
5. ANTI CORROSIVE COATING REQUIRED ON ALL BOLT AND RESTRAINT ASSEMBLIES AND WELDS.
6. SACRAFICIAL ZINC ANODE CAPS ON EACH SIDE OF WATER FITTINGS. SEE ENGINEERING GUIDELINES.
7. INSTALL POLYETHELENE FILM WRAP AROUND ALL PIPE INCLUDED IN THE LOWERING.

Stantec
733 Marquette Ave Suite 1000
Minneapolis, MN 55402
www.stantec.com

WATER MAIN LOWERING WITH INSULATION DETAIL

CHASKA, MINNESOTA

LAST REVISION: MARCH 2019

PLATE NO. WAT-6

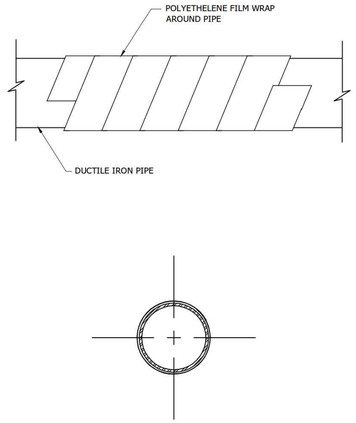

Stantec
2335 Highway 36 W
St. Paul, MN 55113
www.stantec.com

TYPICAL WATER MAIN INSTALLATION

CHASKA, MINNESOTA

LAST REVISION: MARCH 2008

PLATE NO. WAT-7

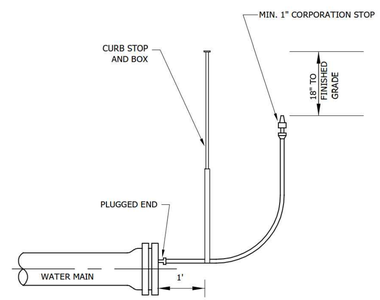

AFTER MEETING TEST REQUIREMENTS THE AIR BLEED LINE SHALL BE DISCONNECTED AT THE PLUG WITH NO ADDITIONAL COMPENSATION.

Stantec
2335 Highway 36 W
St. Paul, MN 55113
www.stantec.com

TYPICAL AIR BLEED INSTALLATION

CHASKA, MINNESOTA

LAST REVISION: MARCH 2008

PLATE NO. WAT-8

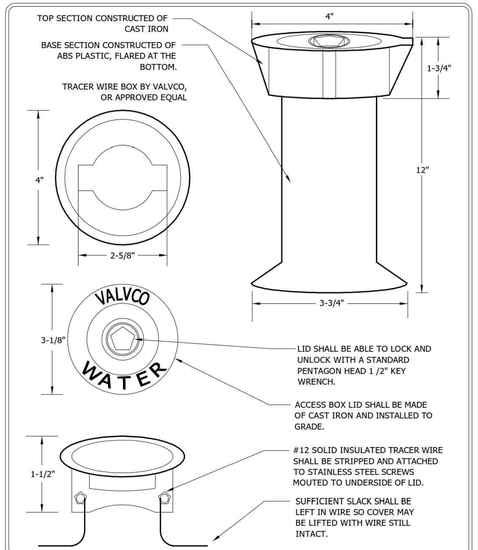

Stantec
2335 Highway 36 W
St. Paul, MN 55113
www.stantec.com

DIP TO C900 WATERMAIN TRANSITION FOR TRACER WIRE

CHASKA, MINNESOTA

LAST REVISION: MAY 2016

PLATE NO. WAT-9

N:\0024429.02\DWG\CIVIL\UTILITY\0024429.02S-DT.DWG

OAK CREEK 2ND ADDITION

DESIGNED: FDH II
CHECKED: FDH II
DRAWN: KFP/DJW
HORIZONTAL SCALE:
VERTICAL SCALE:

INITIAL ISSUE: 02/07/23
REVISIONS:

PREPARED FOR:

DR HORTON, INC. - MINNESOTA
20860 KENBRIDGE COURT, SUITE 100
LAKEVILLE, MINNESOTA 55044

I HEREBY CERTIFY THAT THIS PLAN WAS PREPARED BY ME OR UNDER MY DIRECT SUPERVISION AND THAT I AM A DULY LICENSED PROFESSIONAL ENGINEER UNDER THE LAWS OF THE STATE OF MINNESOTA.
FRANCIS D. HAGEN
DATE: 02/07/23 LICENSE NO. 17716

OAK CREEK 2ND ADDITION
CHASKA, MN

Westwood
Phone (952) 937-5150 12701 Whitewater Drive, Suite #300
Fax (952) 937-5822 Minnetonka, MN 55343
Toll Free (888) 937-5150 westwoodps.com
Westwood Professional Services, Inc.

DETAILS

PROJECT NUMBER: 0024429.02

SHEET NUMBER: 14 OF 20
DATE: 02/07/23

© 2022 Westwood Professional Services, Inc.

Call 48 Hours before digging:
811 or call811.com
Common Ground Alliance

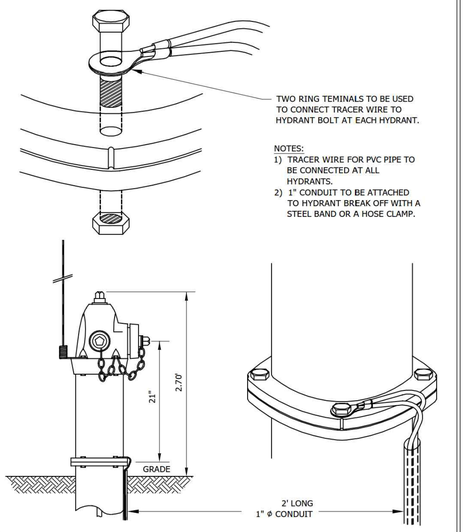

Stantec
2335 Highway 36 W
St. Paul, MN 55113
www.stantec.com

TRACER WIRE FOR PVC WATER MAIN

CHASKA, MN

LAST REVISION: APRIL 2008

PLATE NO. WAT-10

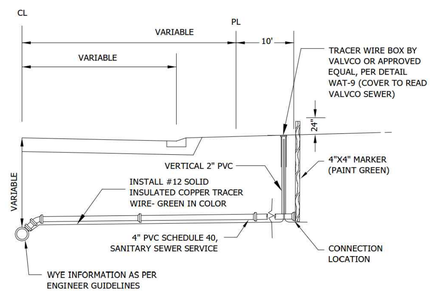

NOTES:
1. SEWER SERVICES, 4" SCHEDULE 40 PVC SEWER PIPE
2. SLOPE - 1/4" PER FOOT MINIMUM.
3. PIPE JOINTS SHALL BE NON GASKETED, SOLVENT WELD TYPE.
4. ALL PIPE SHALL BE BEDDED IN GRANULAR BORROW 3149.2B1 EXCEPT THE LAST TEN FEET WHERE COARSE FILTER AGGREGATE (3149.2H) AGGREGATE WILL BE REQUIRED.
5. BENDS OF 45° OR LESS SHALL BE USED WITHIN THE LAST 5' OF THE SERVICE IF THE DEPTH OF THE SERVICE WOULD EXCEED 10'.
6. NO SERVICE RISERS LESS THAN 3 FEET SHALL BE PERMITTED.
7. A SEPARATE TRACER WIRE WILL EXTEND FROM THE FINISH GRADE AT TRACER WIRE BOX AND FOLLOW SEWER SERVICE TO STRUCTURE FOUNDATION. TRACER WIRE FROM BOX TO FOUNDATION BY OTHERS.
8. FOR DEPTHS GREATER THAN 22', SERVICE PIPE SHALL BE C900 FROM MAIN TO CONNECTION, WITH TRANSITION FITTING FROM C900 TO SCH 40 INSTALLED AT CONNECTION LOCATION.

Stantec
2335 Highway 36 W
St. Paul, MN 55113
www.stantec.com

SEWER SERVICE CONNECTION

CHASKA, MINNESOTA

LAST REVISION: APRIL 2016

PLATE NO. SER-1

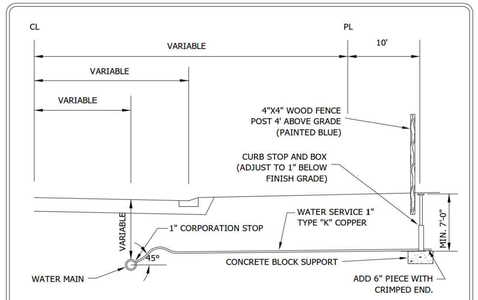

PVC WATER MAIN
STAINLESS STEEL
SERVICE SADDLE
SMITH-BLAIR 372 OR
APPROVED EQUAL

NOTE: FOR SERVICES LARGER THAN 1" A TAPPING SLEEVE IS REQUIRED. ROCKWELL TYPE 230, FULL CIRCLE, WITH TAP THREADED FOR APPROPRIATE SIZE COPPER CORPORATION STOP. (OR EQUAL)

CORPORATION STOP	CURB STOP	CURB BOX
MUELLER B-25000-N	MUELLER B-25154-N	MUELLER H-10300-N OR H-10302-N
FORD FB-600-4-NL OR-6-NL	FORD B22-444M-NL OR-666M-NL	FORD EM2-75-56R-NL OR EM2-75-57R-NL
A.Y. MCDONALD 74701-B	A.Y. MCDONALD 76104	A.Y. MCDONALD 75615 OR 75614

NOTES:
1. CURB BOX SHALL HAVE A STATIONARY ROD
2. CURB BOX SHALL EXTEND FROM 78" TO 90".
3. ALL PIPE SHALL BE BEDDED IN GRANULAR BORROW 3149.2B1 EXCEPT THE LAST TEN FEET WHERE COARSE FILTER AGGREGATE (3149.2H) WILL BE REQUIRED.
4. IF CURB STOP IS IN DRIVEWAY, CONTRACTOR MUST INSTALL A FORD A-1 CASTING, MARKED WITH "WATER" ON LID.
5. CURB BOX LID SHALL BE MUELLER #89375 OR EQUAL.
6. ALL BRASS FITTINGS SHALL BE "NO LEAD BRASS"

Stantec
2335 Highway 36 W
St. Paul, MN 55113
www.stantec.com

WATER SERVICE CONNECTION
COPPER PIPE
CHASKA, MINNESOTA

LAST REVISION: MARCH 2016

PLATE NO. SER-2

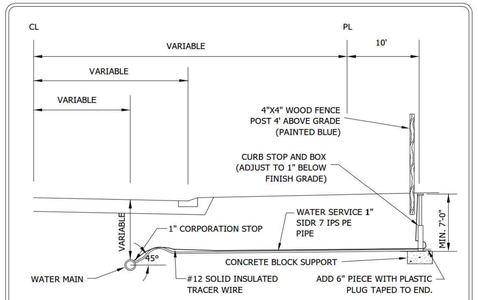

PVC WATER MAIN
STAINLESS STEEL
SERVICE SADDLE
SMITH-BLAIR 372 OR
APPROVED EQUAL

NOTE: FOR SERVICES LARGER THAN 1" A TAPPING SLEEVE IS REQUIRED. ROCKWELL TYPE 230, FULL CIRCLE, WITH TAP THREADED FOR APPROPRIATE SIZE COPPER CORPORATION STOP. (OR EQUAL)

CORPORATION STOP	CURB STOP	CURB BOX
MUELLER B25009N	MUELLER B25222N	MUELLER H-10300-N OR H-10302-N
FORD FB1001-4Q	FORD B66444MQ	FORD EM2-75-56R-NL OR EM2-75-57R-NL
A.Y. MCDONALD 74704B	A.Y. MCDONALD 76104	A.Y. MCDONALD 75615 OR 75614

NOTES:
1. CURB BOX SHALL HAVE A STATIONARY ROD.
2. CURB BOX SHALL EXTEND FROM 78" TO 90".
3. ALL PIPE SHALL BE BEDDED IN GRANULAR BORROW 3149.2B1 EXCEPT THE LAST TEN FEET WHERE COARSE FILTER AGGREGATE (3149.2H) WILL BE REQUIRED.
4. IF CURB STOP IS IN DRIVEWAY, CONTRACTOR MUST INSTALL A FORD A-1 CASTING, MARKED WITH "WATER" ON LID.
5. CURB BOX LID SHALL BE MUELLER #89375 "TW" OR EQUAL.
6. ALL BRASS FITTINGS SHALL BE "NO LEAD BRASS".
7. PIPE INSERT STIFFENERS REQUIRED FOR FITTING CONNECTIONS.
8. HDPE SERVICE PIPE SHALL BE MANUFACTURED BY ENDOPURE OR BLUE ULTRA PIPE.

Stantec
2335 Highway 36 W
St. Paul, MN 55113
www.stantec.com

WATER SERVICE CONNECTION
HDPE PIPE
CHASKA, MINNESOTA

LAST REVISION: MARCH 2016

PLATE NO. SER-2A

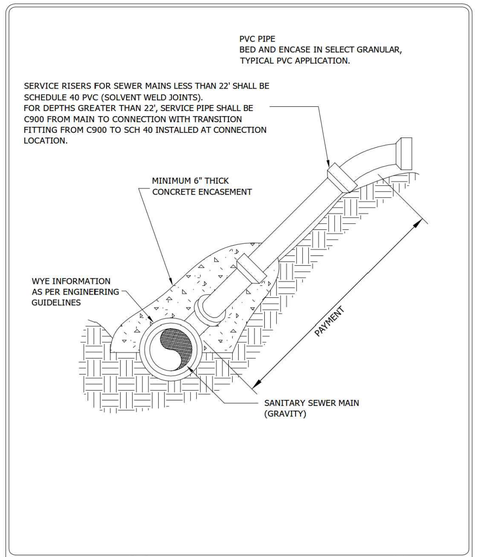

Stantec
2335 Highway 36 W
St. Paul, MN 55113
www.stantec.com

SERVICE RISER

CHASKA, MINNESOTA

LAST REVISION: MARCH 2016

PLATE NO. SER-3

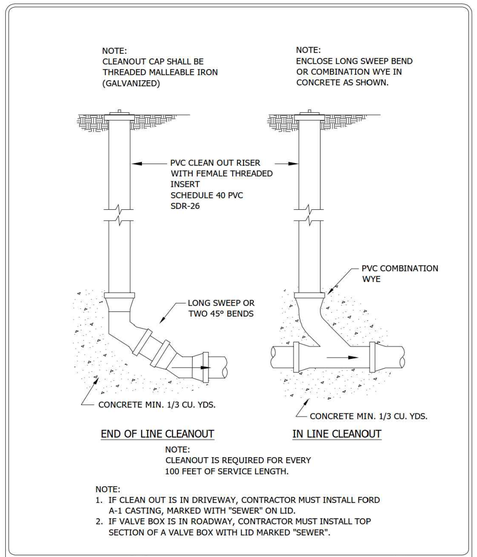

NOTE:
CLEANOUT IS REQUIRED FOR EVERY 100 FEET OF SERVICE LENGTH.

NOTE:
1. IF CLEAN OUT IS IN DRIVEWAY, CONTRACTOR MUST INSTALL FORD A-1 CASTING, MARKED WITH "SEWER" ON LID.
2. IF VALVE BOX IS IN ROADWAY, CONTRACTOR MUST INSTALL TOP SECTION OF A VALVE BOX WITH LID MARKED "SEWER".

Stantec
2335 Highway 36 W
St. Paul, MN 55113
www.stantec.com

SERVICE LINE CLEANOUTS

CHASKA, MINNESOTA

LAST REVISION: MARCH 2001

PLATE NO. SER-4

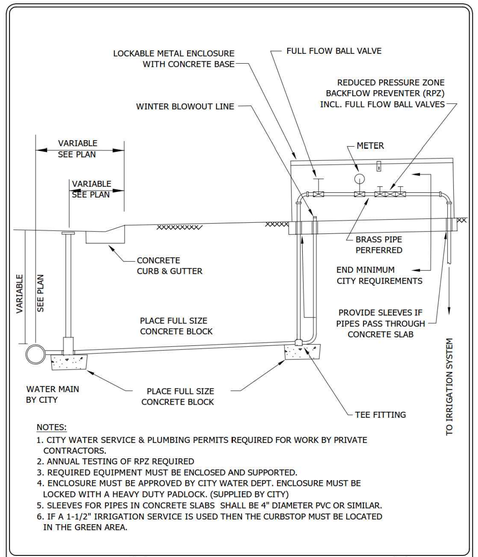

NOTES:
1. CITY WATER SERVICE & PLUMBING PERMITS REQUIRED FOR WORK BY PRIVATE CONTRACTORS.
2. ANNUAL TESTING OF RPZ REQUIRED
3. REQUIRED EQUIPMENT MUST BE ENCLOSED AND SUPPORTED.
4. ENCLOSURE MUST BE APPROVED BY CITY WATER DEPT. ENCLOSURE MUST BE LOCKED WITH A HEAVY DUTY PADLOCK. (SUPPLIED BY CITY)
5. SLEEVES FOR PIPES IN CONCRETE SLABS SHALL BE 4" DIAMETER PVC OR SIMILAR.
6. IF A 1-1/2" IRRIGATION SERVICE IS USED THEN THE CURBSTOP MUST BE LOCATED IN THE GREEN AREA.

Stantec
2335 Highway 36 W
St. Paul, MN 55113
www.stantec.com

IRRIGATION SERVICE
BY PRIVATE CONTRACTOR

CHASKA, MINNESOTA

LAST REVISION: MARCH 2018

PLATE NO. SER-6

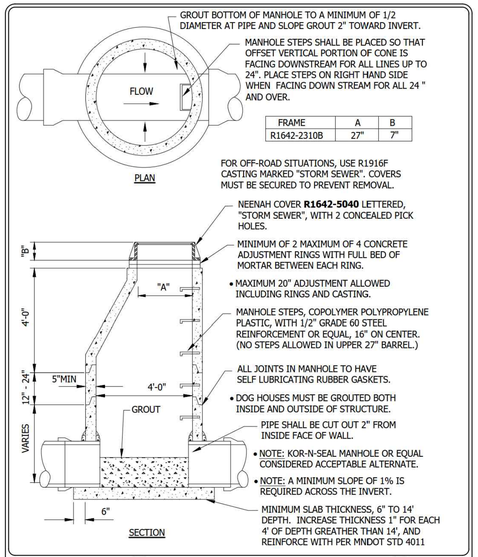

FRAME	A	B
R1642-2310B	27"	7"

Stantec
2335 Highway 36 W
St. Paul, MN 55113
www.stantec.com

STORM SEWER MANHOLE

CHASKA, MINNESOTA

LAST REVISION: MARCH 2018

PLATE NO. STO-1

N:\0024429.02\DWGs\CIVIL\UTILITY\0024429.02S-DT.DWG

OAK CREEK 2ND ADDITION

DESIGNED: FDH II
CHECKED: FDH II
DRAWN: KFP/DJW
HORIZONTAL SCALE:
VERTICAL SCALE:

INITIAL ISSUE: 02/07/23
REVISIONS:
△ . .
△ . .
△ . .
△ . .
△ . .

PREPARED FOR:

DR HORTON, INC. - MINNESOTA

20860 KENBRIDGE COURT, SUITE 100
LAKEVILLE, MINNESOTA 55044

I HEREBY CERTIFY THAT THIS PLAN WAS PREPARED BY ME OR UNDER MY DIRECT SUPERVISION AND THAT I AM A DULY LICENSED PROFESSIONAL ENGINEER UNDER THE LAWS OF THE STATE OF MINNESOTA.

FRANCIS D. HAGEN

DATE: 02/07/23 LICENSE NO. 17716

OAK CREEK 2ND ADDITION

CHASKA, MN

Westwood

Phone (952) 937-5150 12701 Whitewater Drive, Suite #300
Fax (952) 937-5822 Minnetonka, MN 55343
Toll Free (888) 937-5150 westwoodps.com

Westwood Professional Services, Inc.

DETAILS

PROJECT NUMBER: 0024429.02

SHEET NUMBER: 15 OF 20

DATE: 02/07/23

© 2022 Westwood Professional Services, Inc.

Call 48 Hours before digging:
811 or call811.com
Common Ground Alliance

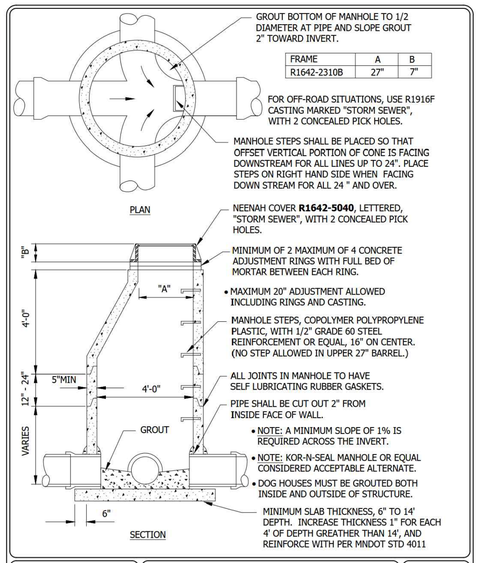

FRAME	A	B
R1642-2310B	27"	7"

Stantec
2335 Highway 36 W
St. Paul, MN 55113
www.stantec.com

STORM SEWER JUNCTION MANHOLE
CHASKA, MINNESOTA

LAST REVISION: MARCH 2018
PLATE NO. STO-2

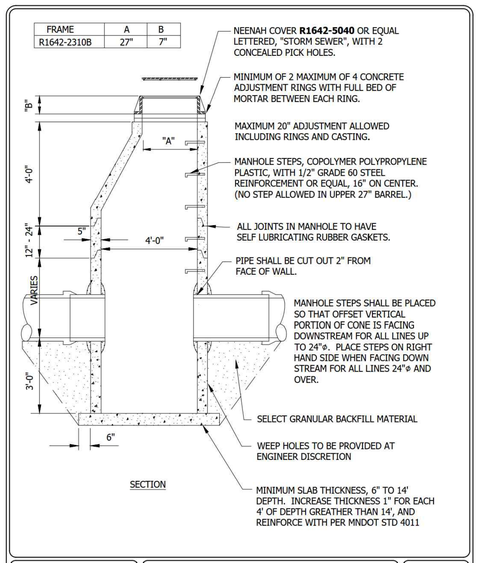

FRAME	A	B
R1642-2310B	27"	7"

Stantec
2335 Highway 36 W
St. Paul, MN 55113
www.stantec.com

PERFORATED SUMP MANHOLE
CHASKA, MINNESOTA

LAST REVISION: MARCH 2018
PLATE NO. STO-4

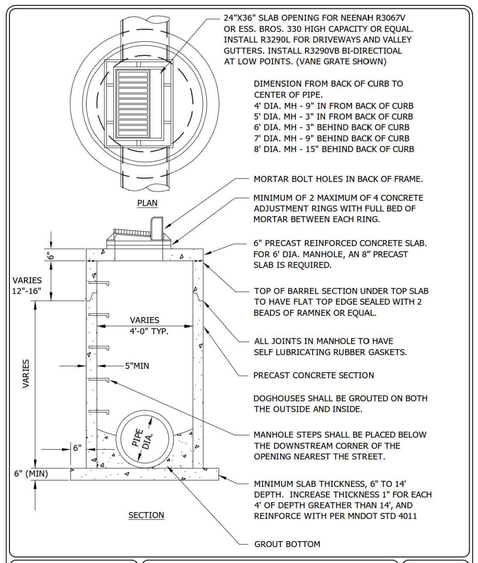

Stantec
2335 Highway 36 W
St. Paul, MN 55113
www.stantec.com

TYPE II
CATCHBASIN MANHOLE
CHASKA, MINNESOTA

LAST REVISION: MARCH 2018
PLATE NO. STO-5

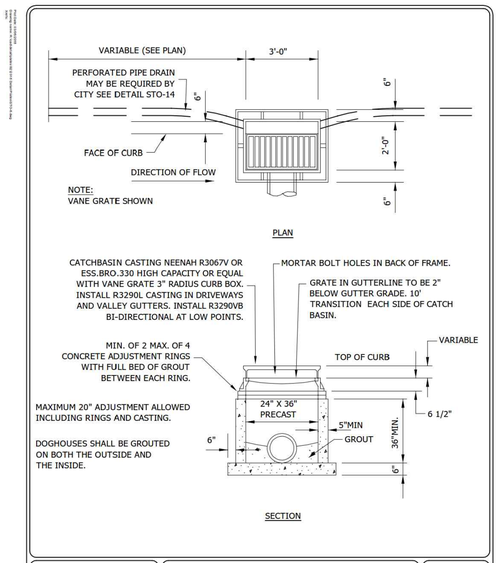

Stantec
2335 Highway 36 W
St. Paul, MN 55113
www.stantec.com

TYPE II
CATCHBASIN
CHASKA, MINNESOTA

LAST REVISION: MARCH 2018
PLATE NO. STO-6

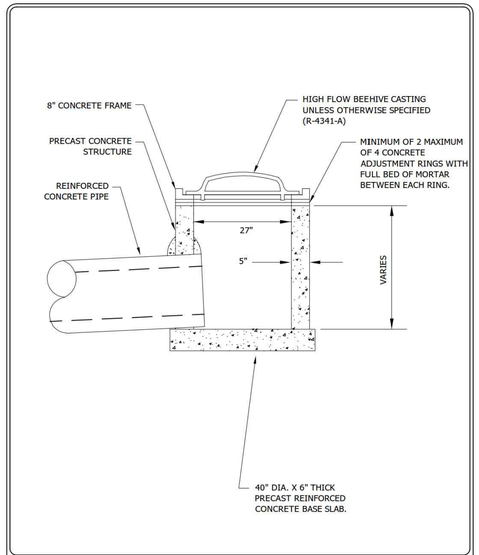

Stantec
2335 Highway 36 W
St. Paul, MN 55113
www.stantec.com

PRECAST 27" SHALLOW DEPTH BEEHIVE
CHASKA, MINNESOTA

LAST REVISION: MARCH 2018
PLATE NO. STO-9

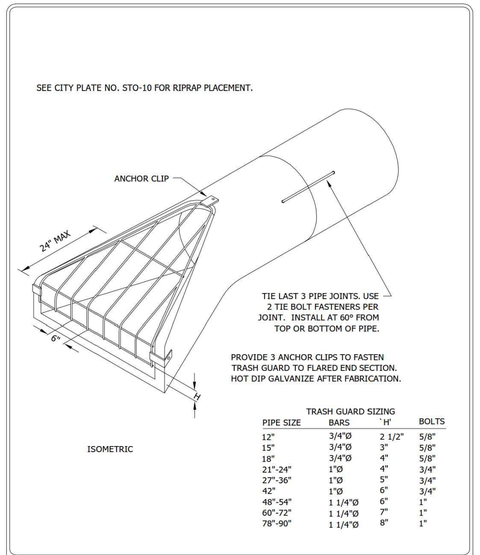

TRASH GUARD SIZING

PIPE SIZE	BARS	'H'	BOLTS
12"	3/4"Ø	2 1/2"	5/8"
15"	3/4"Ø	3"	5/8"
18"	3/4"Ø	4"	5/8"
21"-24"	1"Ø	4"	3/4"
27"-36"	1"Ø	5"	3/4"
42"	1"Ø	6"	3/4"
48"-54"	1 1/4"Ø	6"	1"
60"-72"	1 1/4"Ø	7"	1"
78"-90"	1 1/4"Ø	8"	1"

Stantec
2335 Highway 36 W
St. Paul, MN 55113
www.stantec.com

FLARED END SECTION AND TRASH GUARD
CHASKA, MINNESOTA

LAST REVISION: FEB. 1995
PLATE NO. STO-10

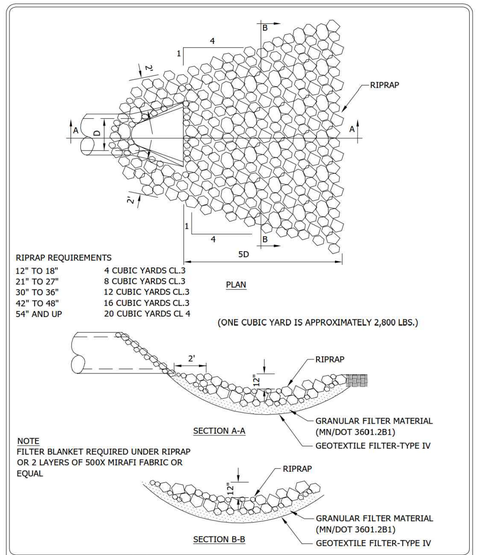

Stantec
2335 Highway 36 W
St. Paul, MN 55113
www.stantec.com

RIPRAP AT OUTLETS
CHASKA, MINNESOTA

LAST REVISION: APRIL 2004
PLATE NO. STO-11

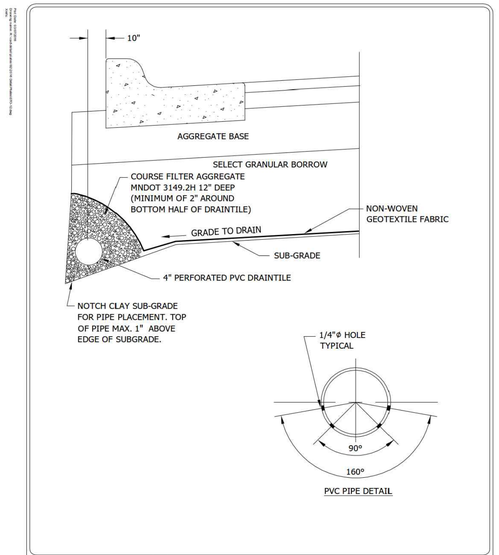

Stantec
2335 Highway 36 W
St. Paul, MN 55113
www.stantec.com

PERFORATED PVC DRAINTILE PIPE BELOW CONCRETE CURB
CHASKA, MINNESOTA

LAST REVISION: NOV. 2016
PLATE NO. STO-12

N:\0024429.02\DWG\CIVIL\UTILITY\0024429.02S-DT.DWG

OAK CREEK 2ND ADDITION

DESIGNED: FDH II
CHECKED: FDH II
DRAWN: KFP/DJW
HORIZONTAL SCALE:
VERTICAL SCALE:

INITIAL ISSUE: 02/07/23
REVISIONS:
1 . .
2 . .
3 . .
4 . .
5 . .

PREPARED FOR:

DR HORTON, INC. - MINNESOTA
20860 KENBRIDGE COURT, SUITE 100
LAKEVILLE, MINNESOTA 55044

I HEREBY CERTIFY THAT THIS PLAN WAS PREPARED BY ME OR UNDER MY DIRECT SUPERVISION AND THAT I AM A DULY LICENSED PROFESSIONAL ENGINEER UNDER THE LAWS OF THE STATE OF MINNESOTA.
FRANCIS D. HAGEN
DATE: 02/07/23 LICENSE NO. 17716

OAK CREEK 2ND ADDITION
CHASKA, MN

Westwood
Phone (952) 937-5150 12701 Whitewater Drive, Suite #300
Fax (952) 937-5822 Minnetonka, MN 55343
Toll Free (888) 937-5150 westwoodps.com
Westwood Professional Services, Inc.

DETAILS

PROJECT NUMBER: 0024429.02

SHEET NUMBER: 16 OF 20
DATE: 02/07/23

© 2022 Westwood Professional Services, Inc.

Call 48 Hours before digging:
811 or call811.com
Common Ground Alliance

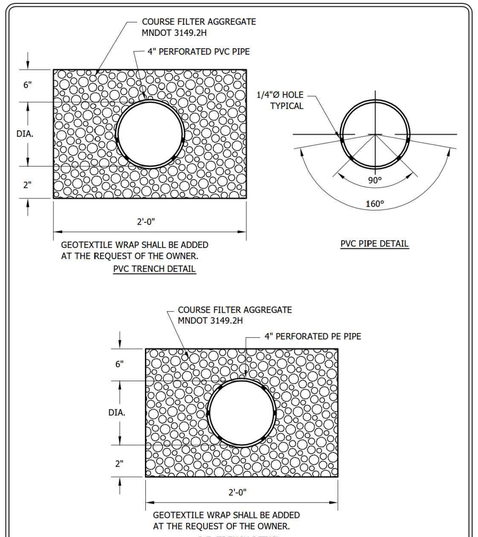

Stantec
2335 Highway 36 W
St. Paul, MN 55113
www.stantec.com

PERFORATED PIPE
TRENCH DETAIL

CHASKA, MINNESOTA

LAST REVISION: NOV. 2014

PLATE NO. STO-13

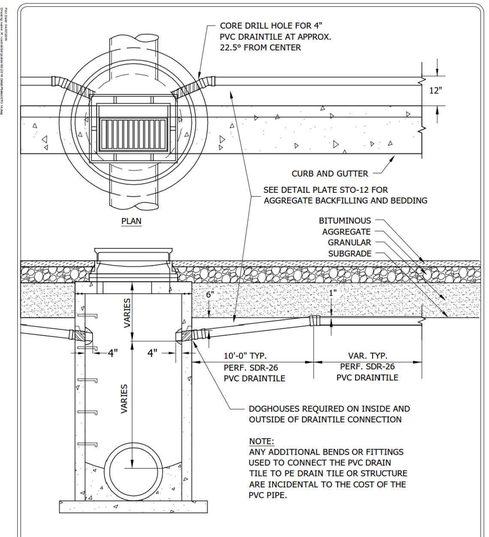

Stantec
2335 Highway 36 W
St. Paul, MN 55113
www.stantec.com

DRAINTILE INSTALLATION INTO
CATCHBASIN MANHOLE

CHASKA, MINNESOTA

LAST REVISION: APRIL 2016

PLATE NO. STO-14

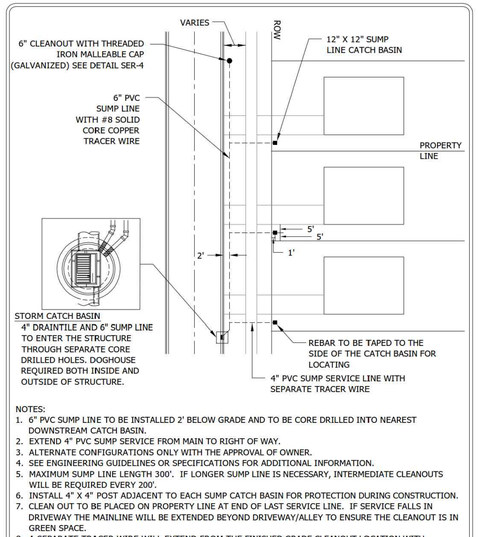

NOTES:
1. 6" PVC SUMP LINE TO BE INSTALLED 2' BELOW GRADE AND TO BE CORE DRILLED INTO NEAREST DOWNSTREAM CATCH BASIN.
2. EXTEND 4" PVC SUMP SERVICE FROM MAIN TO RIGHT OF WAY.
3. ALTERNATE CONFIGURATIONS ONLY WITH THE APPROVAL OF OWNER.
4. SEE ENGINEERING GUIDELINES OR SPECIFICATIONS FOR ADDITIONAL INFORMATION.
5. MAXIMUM SUMP LINE LENGTH 300'. IF LONGER SUMP LINE IS NECESSARY, INTERMEDIATE CLEANOUTS WILL BE REQUIRED EVERY 200'.
6. INSTALL 4" X 4" POST ADJACENT TO EACH SUMP CATCH BASIN FOR PROTECTION DURING CONSTRUCTION.
7. CLEAN OUT TO BE PLACED ON PROPERTY LINE AT END OF LAST SERVICE LINE. IF SERVICE FALLS IN DRIVEWAY THE MAINLINE WILL BE EXTENDED BEYOND DRIVEWAY/ALLEY TO ENSURE THE CLEANOUT IS IN GREEN SPACE.
8. A SEPARATE TRACER WIRE WILL EXTEND FROM THE FINISHED GRADE CLEANOUT LOCATION WITH TRACER WIRE BOX AND FOLLOW THE SUMP LINE TO THE STRUCTURE LOCATION.

Stantec
2335 Highway 36 W
St. Paul, MN 55113
www.stantec.com

PVC SUMP LINE
BEHIND CURB

CHASKA, MINNESOTA

LAST REVISION: MAY 2016

PLATE NO. STO-15

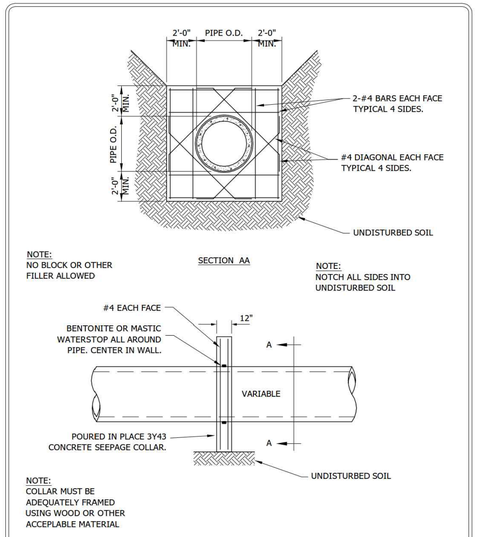

Stantec
2335 Highway 36 W
St. Paul, MN 55113
www.stantec.com

SEEPAGE COLLAR

CHASKA, MINNESOTA

LAST REVISION: MARCH 2001

PLATE NO. STO-16

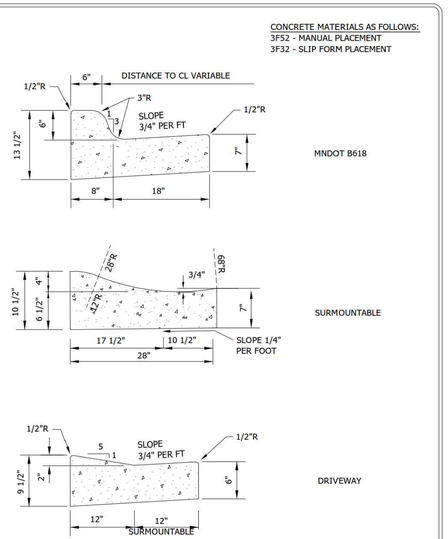

Stantec
2335 Highway 36 W
St. Paul, MN 55113
www.stantec.com

CURB AND GUTTER

CHASKA, MINNESOTA

LAST REVISION: APRIL 2016

PLATE NO. STR-1

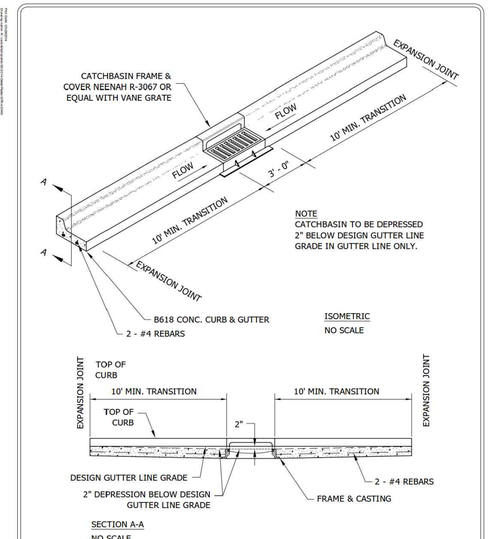

Stantec
2335 Highway 36 W
St. Paul, MN 55113
www.stantec.com

B618 CURB & GUTTER
CONSTRUCTION AT CATCHBASIN

CHASKA, MINNESOTA

LAST REVISION: MARCH 2008

PLATE NO. STR-4

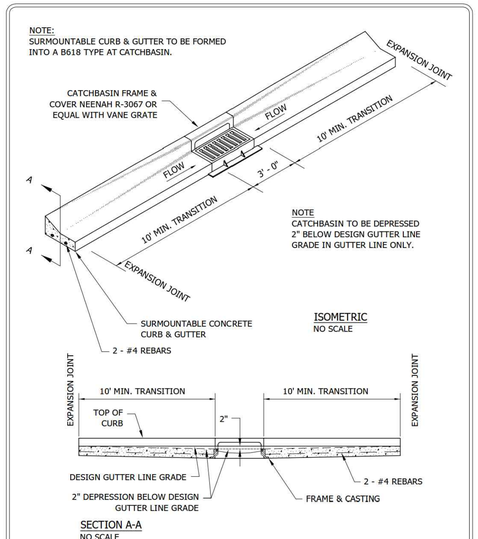

Stantec
2335 Highway 36 W
St. Paul, MN 55113
www.stantec.com

SURMOUNTABLE CURB & GUTTER
CONSTRUCTION AT CATCHBASIN

CHASKA, MINNESOTA

LAST REVISION: MARCH 2008

PLATE NO. STR-5

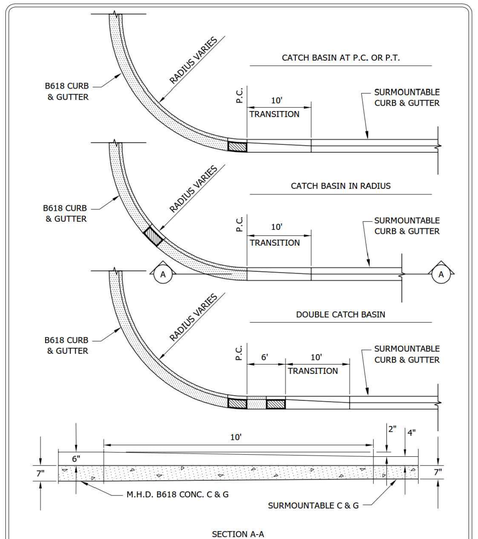

Stantec
2335 Highway 36 W
St. Paul, MN 55113
www.stantec.com

CONCRETE CURB & GUTTER
TRANSITION

CHASKA, MINNESOTA

LAST REVISION: OCT. 1989

PLATE NO. STR-10

N:\0024429.02\DWGs\CIVIL\UTILITY\0024429.02S-DT.DWG

OAK CREEK 2ND ADDITION

DESIGNED:	FDH II
CHECKED:	FDH II
DRAWN:	KFP/DJW
HORIZONTAL SCALE:	
VERTICAL SCALE:	

INITIAL ISSUE: 02/07/23
REVISIONS:
1 . .
2 . .
3 . .
4 . .
5 . .

PREPARED FOR:

DR HORTON, INC. - MINNESOTA

20860 KENBRIDGE COURT, SUITE 100
LAKEVILLE, MINNESOTA 55044

I HEREBY CERTIFY THAT THIS PLAN WAS PREPARED BY ME OR UNDER MY DIRECT SUPERVISION AND THAT I AM A DULY LICENSED PROFESSIONAL ENGINEER UNDER THE LAWS OF THE STATE OF MINNESOTA.

FRANCIS D. HAGEN II

FRANCIS D. HAGEN

DATE: 02/07/23 LICENSE NO. 17716

OAK CREEK 2ND ADDITION

CHASKA, MN

Westwood

Phone (952) 937-5150 12701 Whitewater Drive, Suite #300
Fax (952) 937-5822 Minnetonka, MN 55343
Toll Free (888) 937-5150 westwoodps.com

Westwood Professional Services, Inc.

DETAILS

PROJECT NUMBER: 0024429.02

SHEET NUMBER: 17 OF 20

DATE: 02/07/23

© 2022 Westwood Professional Services, Inc.

Call 48 Hours before digging:
811 or call811.com
Common Ground Alliance

NOTE: PLACE NEENAH CAST IRON UNCOATED TRUNCATED DOMES THE WIDTH OF OPENING.

① ADA REQUIRED TRUNCATED DOME PER MN/DOT STD. PLATE 7038A WITH CAULK SEALER

② CROSS SLOPE OF RAMP MAY NOT EXCEED .02 FT/FT AS CONSTRUCTED

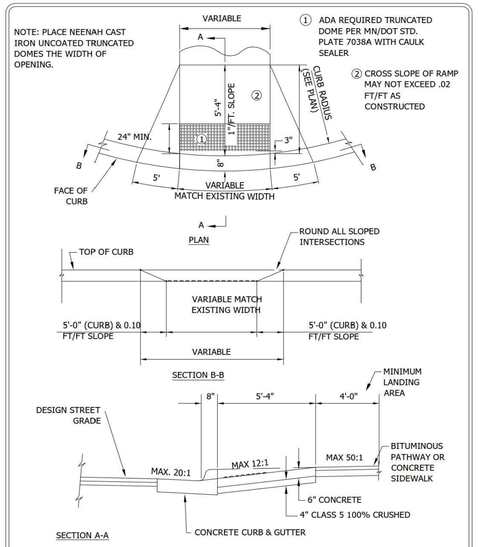

Stantec
2335 Highway 36 W
St. Paul, MN 55113
www.stantec.com

PEDESTRIAN CURB RAMP FOR PATHWAY/SIDEWALK

CHASKA, MINNESOTA

LAST REVISION: APRIL 2011

PLATE NO. STR-11

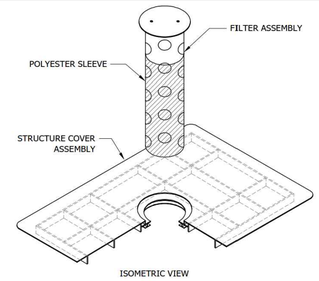

ISOMETRIC VIEW

DEVICES TO BE INSTALLED IMMEDIATELY UPON INSTALLATION OF CONCRETE STRUCTURE OR TOP SLAB.

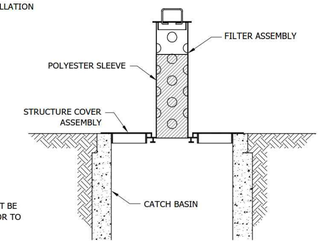

NOTE: ALL OTHER INLET PROTECTION DEVICES MUST BE APPROVED BY OWNER PRIOR TO INSTALLATION.

IN-PLACE ELEVATION VIEW

Stantec
2335 Highway 36 W
St. Paul, MN 55113
www.stantec.com

INLET PROTECTION FOR CATCH BASIN BEFORE CURB CONSTRUCTION

CHASKA, MINNESOTA

LAST REVISION: APRIL 2008

PLATE NO. ERO-4A

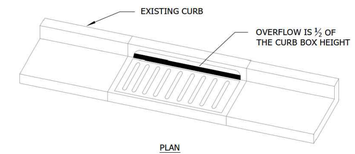

PLAN

WIMCO ROAD DRAIN CG-23* HIGH FLOW INLET PROTECTION CURB AND GUTTER MODEL OR CITY APPROVED EQUAL.

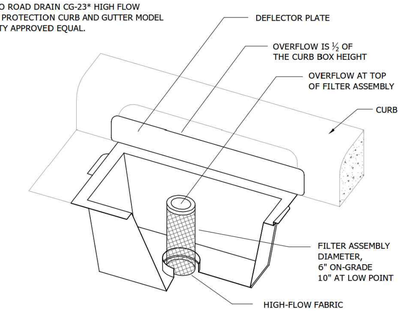

* FOR THE NEW R-3290-VB STANDARD CASTING, INSTALL WIMCO ROAD DRAIN CG-3290 OR CITY APPROVED EQUAL.

Stantec
2335 Highway 36 W
St. Paul, MN 55113
www.stantec.com

INLET PROTECTION - CATCH BASIN INSERT AFTER CURB CONSTRUCTION

CHASKA, MINNESOTA

LAST REVISION: APRIL 2008

PLATE NO. ERO-4B

DEVICES TO BE INSTALLED IMMEDIATELY UPON INSTALLATION OF CONCRETE STRUCTURE CONE OR TOP SLAB.

DEVICES SHOWN ARE AS MANUFACTURED BY WIMCO. MODEL NO. OF UNIT SHOWN: RD 27.

OTHER APPROVED INLET PROTECTION DEVICES FOR BEEHIVE CASTINGS ARE:

- ROYAL ENTERPRISES - MODEL NO 27 INFRASAFE SEDIMENT CONTROL BARRIER - DG.
- PRE MANUFACTURED UNIT BY CIRCLE "H" ENTERPRISES.

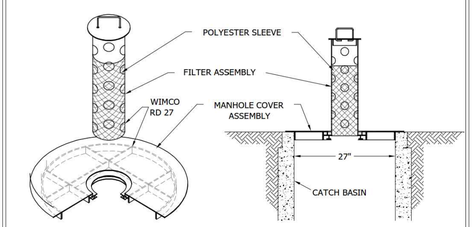

ISOMETRIC VIEW

IN-PLACE ELEVATION VIEW

Stantec
2335 Highway 36 W
St. Paul, MN 55113
www.stantec.com

INLET PROTECTION BEEHIVE CASTING

CHASKA, MINNESOTA

LAST REVISION: APRIL 2008

PLATE NO. ERO-4C

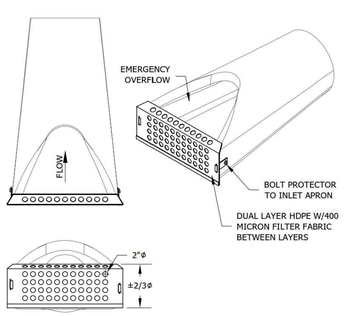

- FILTER FABRIC MAY BE REPLACED AS REQUIRED BY REMOVING BOLTS OR RIVETS CONNECTING HDPE LAYERS AND BOLTING OR RIVETING BACK TOGETHER.
- DEVICES SHOWN ARE AS MANUFACTURED BY ROYAL ENVIRONMENTAL SYSTEMS. INFRASAFE - CULVERT INLET PROTECTOR.

Stantec
2335 Highway 36 W
St. Paul, MN 55113
www.stantec.com

FLARED END EROSION CONTROL

CHASKA, MINNESOTA

LAST REVISION: FEB 2005

PLATE NO. ERO-6

N:\0024429.02\DWGS\CIVIL\UTILITY\0024429.02S-DT.DWG

OAK CREEK 2ND ADDITION

DESIGNED:	FDH II
CHECKED:	FDH II
DRAWN:	KFP/DJW
HORIZONTAL SCALE:	
VERTICAL SCALE:	

INITIAL ISSUE: 02/07/23
REVISIONS:
△ . .
△ . .
△ . .
△ . .
△ . .

PREPARED FOR:

DR HORTON, INC. - MINNESOTA

20860 KENBRIDGE COURT, SUITE 100
LAKEVILLE, MINNESOTA 55044

I HEREBY CERTIFY THAT THIS PLAN WAS PREPARED BY ME OR UNDER MY DIRECT SUPERVISION AND THAT I AM A DULY LICENSED PROFESSIONAL ENGINEER UNDER THE LAWS OF THE STATE OF MINNESOTA.

FRANCIS D. HAGEN

DATE: 02/07/23 LICENSE NO. 17716

OAK CREEK 2ND ADDITION

CHASKA, MN

Westwood

Phone (952) 937-5150 12701 Whitewater Drive, Suite #300
Fax (952) 937-5822 Minnetonka, MN 55343
Toll Free (888) 937-5150 westwoodps.com

Westwood Professional Services, Inc.

DETAILS

PROJECT NUMBER: 0024429.02

SHEET NUMBER: 18 OF 20

DATE: 02/07/23

© 2022 Westwood Professional Services, Inc.

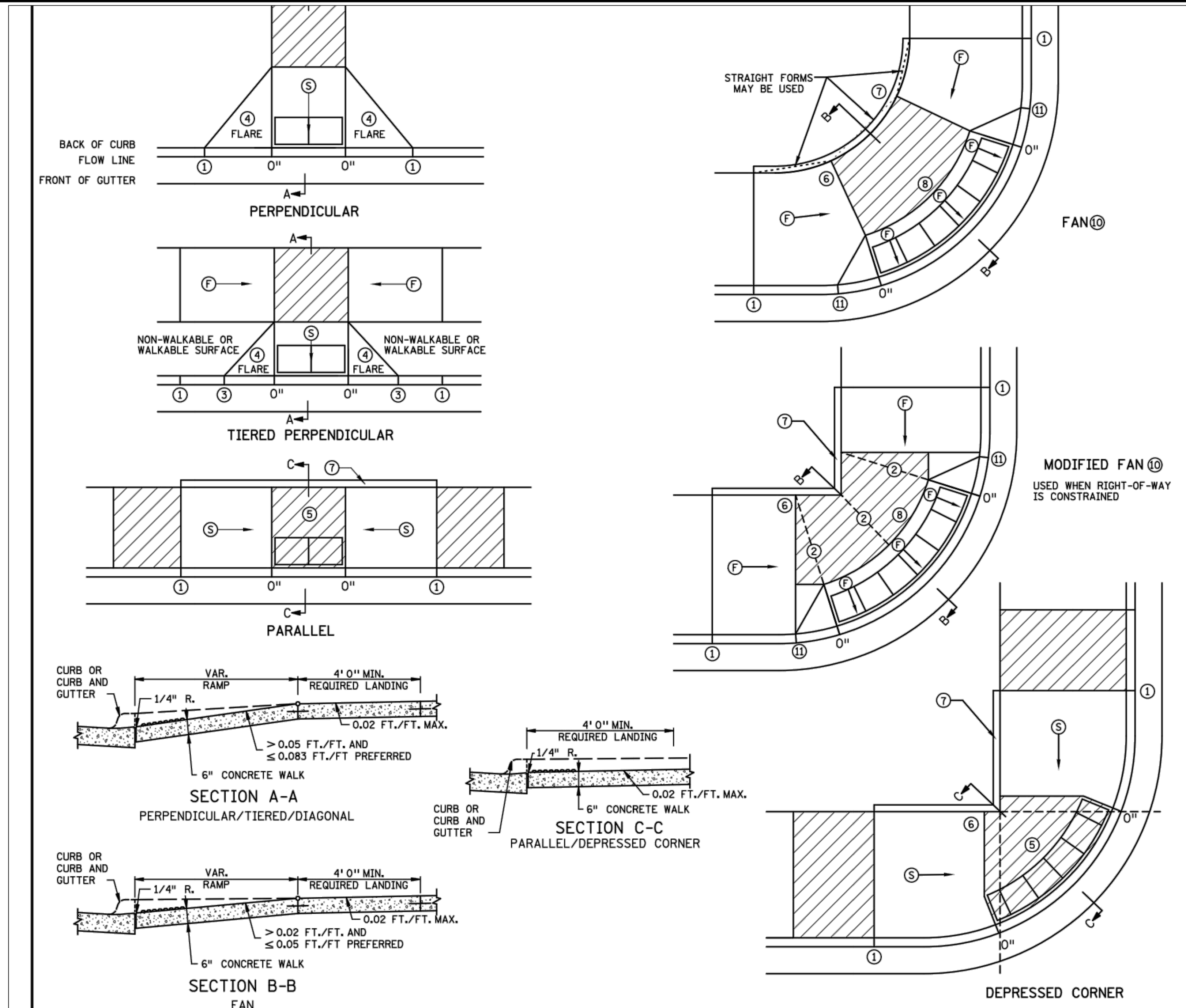

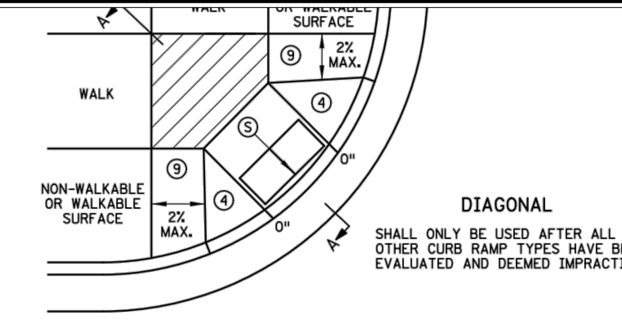

NOTES:

LANDINGS SHALL BE LOCATED ANYWHERE THE PEDESTRIAN ACCESS ROUTE (PAR) CHANGES DIRECTION, AT THE TOP OF RAMPS THAT HAVE RUNNING SLOPES GREATER THAN 5.0%, AND IF THE APPROACHING WALK IS INVERSE GRADE GREATER THAN 2%.

INITIAL CURB RAMP LANDINGS SHALL BE CONSTRUCTED WITHIN 15' FROM THE BACK OF CURB, WITH 6' FROM THE BACK OF CURB BEING THE PREFERRED DISTANCE, ONLY APPLICABLE WHEN THE INITIAL RAMP RUNNING SLOPE IS OVER 5.0%.

SECONDARY CURB RAMP LANDINGS ARE REQUIRED FOR EVERY 30" OF VERTICAL RISE WHEN THE LONGITUDINAL RUNNING SLOPE IS GREATER THAN 5.0%.

CONTRACTION JOINTS SHALL BE CONSTRUCTED ALONG ALL GRADE BREAKS WITHIN THE PAR. 1/4" DEE VISUAL JOINTS SHALL BE USED AT THE TOPS OF CONCRETE FLARES ADJACENT TO WALKABLE SURFA

ALL GRADE BREAKS WITHIN THE PAR SHALL BE PERPENDICULAR TO THE PATH OF TRAVEL, THUS BOT SIDES OF A SLOPED WALKING SURFACE MUST BE EQUAL LENGTH. (EXCEPT AS STATED IN ⑥ BELOW.

TO ENSURE RAMPS AND LANDINGS ARE PROPERLY CONSTRUCTED, ALL INITIAL LANDINGS AT A TOP O A RAMPED SURFACE (RUNNING SLOPE GREATER THAN 2%) SHALL BE FORMED AND PLACED SEPARATELY IN AN INDEPENDENT CONCRETE POUR. FOLLOW SIDEWALK REINFORCEMENT DETAILS ON SHEET 6 OF 6 FOR ALL SEPARATELY POURED INITIAL LANDINGS.

WHEN SIDEWALK IS AT BACK OF CURB, TOP OF CURB SHALL MATCH PROPOSED ADJACENT WALK GRAD

MAINTAIN POSITIVE BOULEVARD DRAINAGE TO TOP OF CURB.

ALL RAMP TYPES SHOULD HAVE A MINIMUM 3' LONG RAMP LENGTH.

4' MINIMUM WIDTH OF DETECTABLE WARNING IS REQUIRED FOR ALL RAMPS. DETECTABLE WARNINGS SHALL CONTINUOUSLY EXTEND FOR A MIN. OF 24" IN THE PATH OF TRAVEL. DETECTABLE WARNING TO COVER THE ENTIRE PAR WIDTH OF SHARED-USE PATHS AND THE ENTIRE PAR WIDTH OF THE WAL WITH THE EXCEPTION OF 3" MAXIMUM ON EACH OUTSIDE EDGE WHICH ENSURES THE DETECTABLE WARNINGS ARE ENCASED IN CONCRETE WHEN ADJACENT TO TURF. WHEN ADJACENT TO CONCRETE FLA 0" - 3" OFFSET IS ALLOWED.

WHEN DESIGNING OR ORDERING RECTANGULAR DETECTABLE WARNING SURFACES SHOULD BE 6" LESS THAN THE INCOMING PAR. ARC LENGTH OF THE RADIAL DETECTABLE WARNINGS SHOULD NOT BE GREATER THAN 20 FEET.

RECTANGULAR DETECTABLE WARNINGS SHALL BE SETBACK 3" FROM THE BACK OF CURB. RADIAL DETECTABLE WARNINGS SHALL BE SETBACK 3" MINIMUM TO 6" MAXIMUM FROM THE BACK OF CURB.

① MATCH FULL HEIGHT CURB.
② 4' MINIMUM DEPTH LANDING REQUIRED ACROSS TOP OF RAMP.
③ 3" HIGH CURB WHEN USING A 3' LONG RAMP, 4" HIGH CURB WHEN USING A 4' LONG RAMP.
④ SEE SHEET 4 OF 6, TYPICAL SIDE TREATMENT OPTIONS, FOR DETAILS ON FLARES AND RETURNED CURBS.
⑤ DETECTABLE WARNINGS MAY BE PART OF THE 4' X 4' MIN. LANDING AREA IF IT IS NOT FEASIBLE TO CONSTRUCT THE LANDING OUTSIDE OF THE DETECTABLE WARNING AREA.
⑥ THE GRADE BREAK SHALL BE PERPENDICULAR TO THE BACK OF WALK. THIS WILL ENSURE THAT THE GRADE BREAK IS PERPENDICULAR TO THE DIRECTION OF TRAVEL. (TYPICAL FOR ALL)
⑦ WHEN ADJACENT TO GRASS, GRADING SHALL ALWAYS BE USED WHEN FEASIBLE. V CURB, IF USED, SHALL BE PLACED OUTSIDE THE SIDEWALK LIMITS WHEN RIGHT OF WAY ALLOWS. WHEN ADJACENT TO PARKING LOTS, CONCRETE OR BITUMINOUS TAPERS LESS THAN 5% RUNNING SLOPE SHOULD BE USED OVER V CURB TO REDUCE TRIPPING HAZARDS AND FACILITATE SNOW & ICE REMOVAL.
⑧ A 7' MIN TOP RADIUS GRADE BREAK IS REQUIRED TO BE CONSTRUCTIBLE.
⑨ PAVE FULL WALK WIDTH.
⑩ "S" SLOPES ON FANS SHALL ONLY BE USED WHEN ALL OTHER FEASIBLE OPTIONS HAVE BEEN EVALUATED AND DEEMED IMPRACTICAL.
⑪ INTERMEDIATE CURB HEIGHTS TAPER SHALL RISE AT 8-10% TO A MINIMUM 3" CURB HEIGHT. REDUCE INTERMEDIATE CURB HEIGHT TO 2+ INCHES IF NECESSARY TO MATCH ADJACENT BOULEVARD OR SIDEWALK GRADES.

LEGEND

THESE LONGITUDINAL SLOPE RANGES SHALL BE THE STARTING POINT. IF SITE CONDITIONS WARRANT, LONGITUDINAL SLOPES UP TO 8.3% OR FLATTER ARE ALLOWED.

- Ⓢ INDICATES PEDESTRIAN RAMP - SLOPE SHALL BE BETWEEN 5.0% MINIMUM AND 8.3% MAXIMUM IN THE DIRECTION SHOWN AND THE CROSS SLOPE SHALL NOT EXCEED 2.0%.
- Ⓕ INDICATES PEDESTRIAN RAMP - SLOPE SHALL BE GREATER THAN 2.0% AND LESS THAN 5.0% IN THE DIRECTION SHOWN AND CROSS SLOPE SHALL NOT EXCEED 2.0%.
- LANDING AREA - 4' X 4' MIN. (5' X 5' MIN. PREFERRED) DIMENSIONS AND MAX 2.0% SLOPE IN ALL DIRECTIONS. LANDING SHALL BE FULL WIDTH OF INCOMING PARS.
- X" CURB HEIGHT

REVISION:
APPROVED: 11-04-2021
JEFFREY PERKINS
OPERATIONS DIVISION

MINNESOTA DEPARTMENT OF TRANSPORTATION | STANDARD PLAN 5-297.250 | 1 OF 6 | PEDESTRIAN CURB RAMP DETAILS
THOMAS STYRBICKI, STATE DESIGN ENGINEER | APPROVED: 11-04-2021 | REVISED:
STATE PROJ. NO. (TH) SHEET NO. OF SHEETS

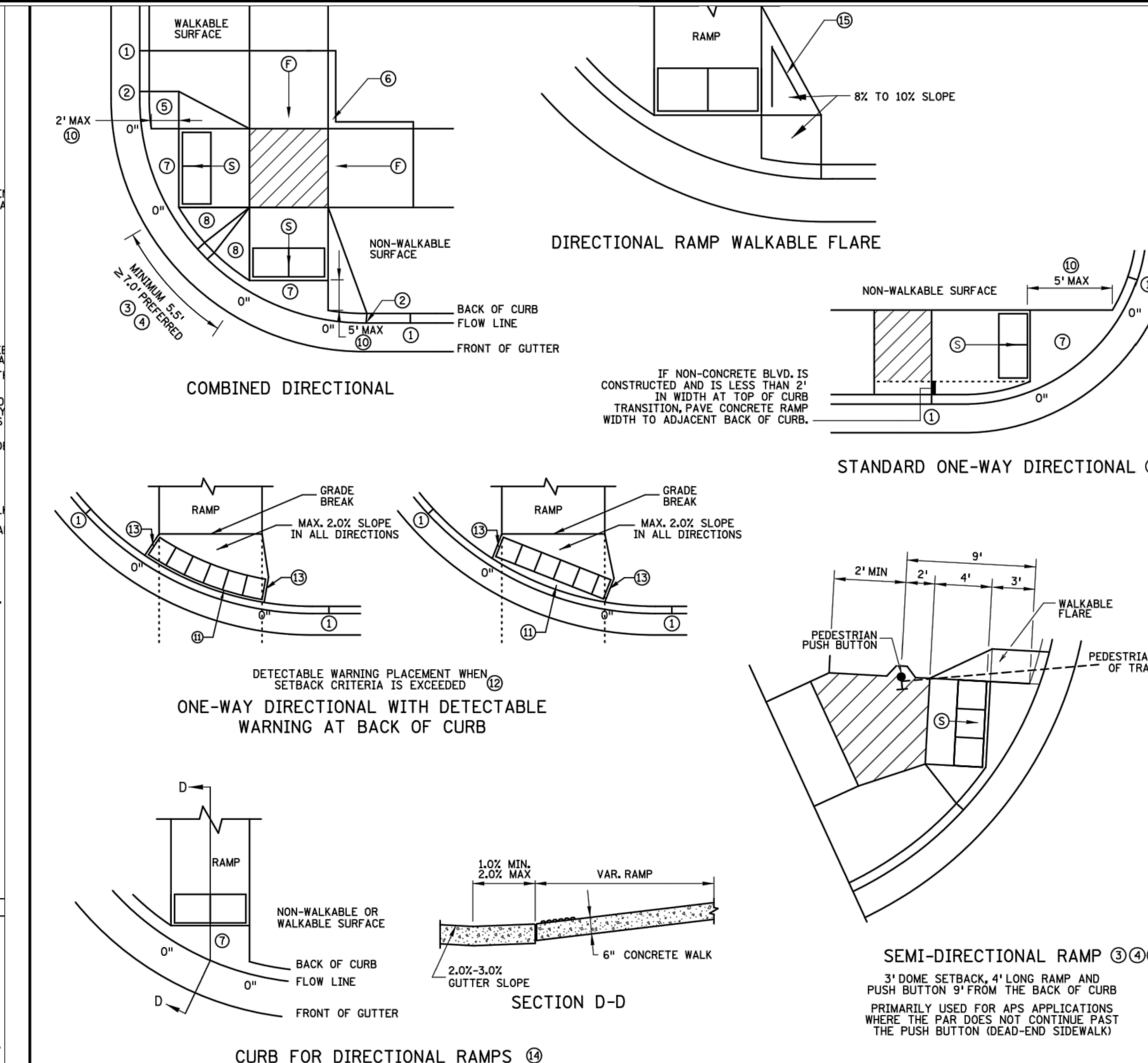

NOTES:

LANDINGS SHALL BE LOCATED ANYWHERE THE PEDESTRIAN ACCESS ROUTE (PAR) CHANGES DIRECTION, AT THE TOP OF RAMPS THAT HAVE RUNNING SLOPES GREATER THAN 5.0%, AND IF THE APPROACHING WALK IS INVERSE GRADE.

INITIAL CURB RAMP LANDINGS SHALL BE CONSTRUCTED WITHIN 15' FROM THE BACK OF CURB, WITH 6' FROM THE BACK OF CURB BEING THE PREFERRED DISTANCE, ONLY APPLICABLE WHEN THE INITIAL RAMP RUNNING SLOPE IS OVER 5.0%.

SECONDARY CURB RAMP LANDINGS ARE REQUIRED FOR EVERY 30" OF VERTICAL RISE WHEN THE LONGITUDINAL SLOPE IS GREATER THAN 5.0%.

CONTRACTION JOINTS SHALL BE CONSTRUCTED ALONG ALL GRADE BREAKS WITHIN THE PAR. 1/4" DEEP VISUAL JOINTS SHALL BE USED AT THE TOP GRADE BREAK OF CONCRETE FLARES ADJACENT TO WALKABLE SURFACES.

ALL GRADE BREAKS WITHIN THE PAR SHALL BE PERPENDICULAR TO THE PATH OF TRAVEL. THUS BOTH SIDES OF A SLOPED WALKING SURFACE MUST BE EQUAL LENGTH.

TO ENSURE INITIAL RAMPS AND INITIAL LANDINGS ARE PROPERLY CONSTRUCTED, LANDINGS SHALL BE CAST SEPARATELY. FOLLOW SIDEWALK REINFORCEMENT DETAILS ON SHEET 6 AND THE ADA SPECIAL PROVISION (PROSECUTION OF WORK).

TOP OF CURB SHALL MATCH PROPOSED ADJACENT WALK GRADE.

WHEN THE BOULEVARD IS 4' WIDE OR LESS, THE TOP OF CURB TAPER SHALL MATCH THE RAMP SLOPES TO REDUCE NEGATIVE BOULEVARD SLOPES FROM THE TOP BACK OF CURB TO THE PAR.

ALL RAMP TYPES SHOULD HAVE A MINIMUM 3' LONG RAMP LENGTH.

4' MINIMUM WIDTH OF DETECTABLE WARNING IS REQUIRED FOR ALL RAMPS. DETECTABLE WARNINGS SHALL CONTINUOUSLY EXTEND FOR A MIN. OF 24" IN THE PATH OF TRAVEL. DETECTABLE WARNING TO COVER THE ENTIRE PAR WIDTH OF SHARED-USE PATHS AND THE ENTIRE PAR WIDTH OF THE WALK WITH THE EXCEPTION OF 3" MAXIMUM ON EACH OUTSIDE EDGE WHICH ENSURES THE DETECTABLE WARNINGS ARE ENCASED IN CONCRETE WHEN ADJACENT TO TURF. WHEN ADJACENT TO CONCRETE FLARES 0" - 3" OFFSET IS ALLOWED.

WHEN DESIGNING OR ORDERING RECTANGULAR DETECTABLE WARNING SURFACES SHOULD BE 6" LESS THAN THE INCOMING PAR. ARC LENGTH OF THE RADIAL DETECTABLE WARNINGS SHOULD NOT BE GREATER THAN 20 FEET.

RADIAL DETECTABLE WARNINGS SHALL BE SETBACK 3" MINIMUM TO 6" MAXIMUM FROM THE BACK OF CURB. SEE NOTES ⑩ & ⑪ FOR INFORMATION REGARDING RECTANGULAR DETECTABLE WARNING PLACEMENT.

① MATCH FULL CURB HEIGHT.
② 3" HIGH CURB WHEN USING A 3' LONG RAMP
4" HIGH CURB WHEN USING A 4' LONG RAMP.
③ 3" MINIMUM CURB HEIGHT (5.5' MIN. DISTANCE REQUIRED BETWEEN DOMES)
4" PREFERRED (7' MIN. DISTANCE REQUIRED BETWEEN DOMES).
④ THE "BUMP" IN BETWEEN THE RAMPS SHOULD NOT BE IN THE PATH OF TRAVEL FOR COMBINED DIRECTION RAMPS. IF THIS OCCURS MODIFY THE RAMP LOCATION OR SWITCH RAMP TO A FAN/DEPRESSED CORNER.
⑤ WHEN USING CONCRETE PAVED FLARES ON THE OUTSIDE OF DIRECTIONAL RAMPS, AND ADJACENT TO A WALKABLE SURFACE, DIRECTIONAL RAMP FLARES SHALL BE USED. SEE THE DETAIL ON THIS SHEET.
⑥ GRADING SHALL ALWAYS BE USED WHEN FEASIBLE. V CURB, IF USED, SHALL BE PLACED OUTSIDE THE SIDEW LIMITS WHEN RIGHT OF WAY ALLOWS. WHEN ADJACENT TO PARKING LOTS, CONCRETE OR BITUMINOUS TAPER SHOULD BE USED OVER V CURB TO REDUCE TRIPPING HAZARDS AND FACILITATE SNOW & ICE REMOVAL.
⑦ MAX. 2.0% SLOPE IN ALL DIRECTIONS IN FRONT OF GRADE BREAK AND DRAIN TO FLOW LINE. SHALL BE CONSTRUCTED INTEGRAL WITH CURB AND GUTTER.
⑧ 8% TO 10% WALKABLE FLARE.
⑨ PLACE DOMES AT THE BACK OF CURB WHEN ALLOWABLE SETBACK CRITERIA IS EXCEEDED.
⑩ FRONT EDGE OF DETECTABLE WARNING SHALL BE SET BACK 2' MAXIMUM WHEN ADJACENT TO WALKABLE SURFACE, AND 5' MAXIMUM WHEN ADJACENT TO NON-WALKABLE SURFACE WITH ONE CORNER SET 3" FROM BACK OF CURB. A WALKABLE SURFACE IS DEFINED AS A PAVED SURFACE ADJACENT TO A CURB RAMP WITHOUT RAISED OBSTACLES THAT COULD MISTAKENLY BE TRAVERSED BY A USER WHO IS VISUALLY IMPAIRED.
⑪ RECTANGULAR DETECTABLE WARNINGS MAY BE SETBACK UP TO 9" FROM THE BACK OF CURB WITH CORNER SET 3" FROM BACK OF CURB. IF 9" SETBACK IS EXCEEDED USE RADIAL DETECTABLE WARNINGS.
⑫ FOR DIRECTIONAL RAMPS WITH THE DETECTABLE WARNINGS PLACED AT THE BACK OF CURB, THE DETECTAB WARNINGS SHALL COVER THE ENTIRE WIDTH OF THE WALK/PATH. THIS ENSURES A DETECTABLE EDGE AND HELPS ELIMINATE THE CURB TAPER OBSTRUCTING THE PATH OF PEDESTRIAN TRAVEL.
⑬ THE CONCRETE WALK SHALL BE FORMED AND CONSTRUCTED PERPENDICULAR TO THE BACK OF CURB. MAINTAIN 3" BETWEEN EDGE OF DOMES AND EDGE OF CONCRETE.
⑭ TO BE USED FOR ALL DIRECTIONAL RAMPS, EXCEPT WHERE DOMES ARE PLACED ALONG THE BACK OF CURB.
⑮ PLACE 2 NO. 4 BARS 4 INCHES FROM SIDE OF FORMS WITH A MINIMUM 2 INCHES OF CONCRETE COVER ALONG EACH SIDE OF FLARE (INCIDENTAL).

LEGEND

THESE LONGITUDINAL SLOPE RANGES SHALL BE THE STARTING POINT. IF SITE CONDITIONS WARRANT, LONGITUDINAL SLOPES UP TO 8.3% OR FLATTER ARE ALLOWED.

- Ⓢ INDICATES PEDESTRIAN RAMP - SLOPE SHALL BE BETWEEN 5.0% MINIMUM AND 8.3% MAXIMUM IN THE DIRECTION SHOWN AND THE CROSS SLOPE SHALL NOT EXCEED 2.0%.
- Ⓕ INDICATES PEDESTRIAN RAMP - SLOPE SHALL BE GREATER THAN 2.0% AND LESS THAN 5.0% IN THE DIRECTION SHOWN AND CROSS SLOPE SHALL NOT EXCEED 2.0%.
- LANDING AREA - 4' X 4' MIN. (5' X 5' MIN. PREFERRED) DIMENSIONS AND MAX 2.0% SLOPE IN ALL DIRECTIONS. LANDING SHALL BE FULL WIDTH OF INCOMING PARS.
- X" CURB HEIGHT

REVISION:
APPROVED: 11-04-2021
JEFFREY PERKINS
OPERATIONS DIVISION

MINNESOTA DEPARTMENT OF TRANSPORTATION | STANDARD PLAN 5-297.250 | 2 OF 6 | PEDESTRIAN CURB RAMP DETAILS
THOMAS STYRBICKI, STATE DESIGN ENGINEER | APPROVED: 11-04-2021 | REVISED:
STATE PROJ. NO. (T.H.) SHEET NO. OF SHEETS

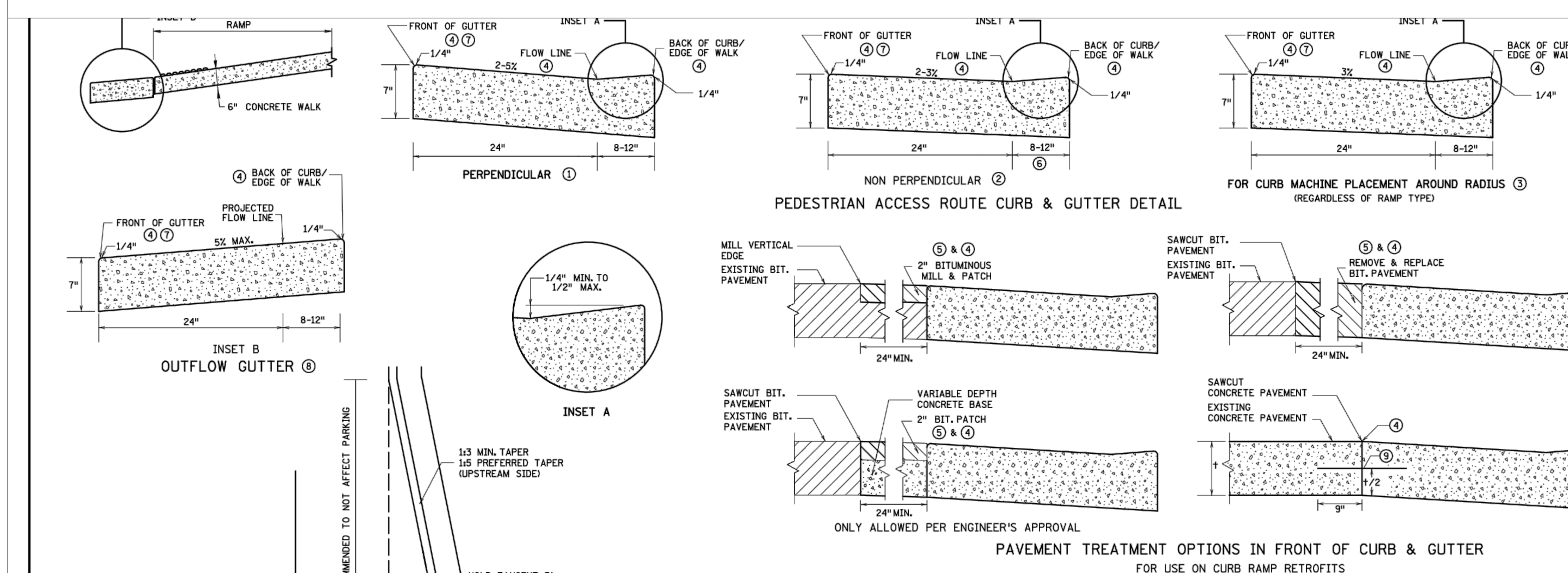

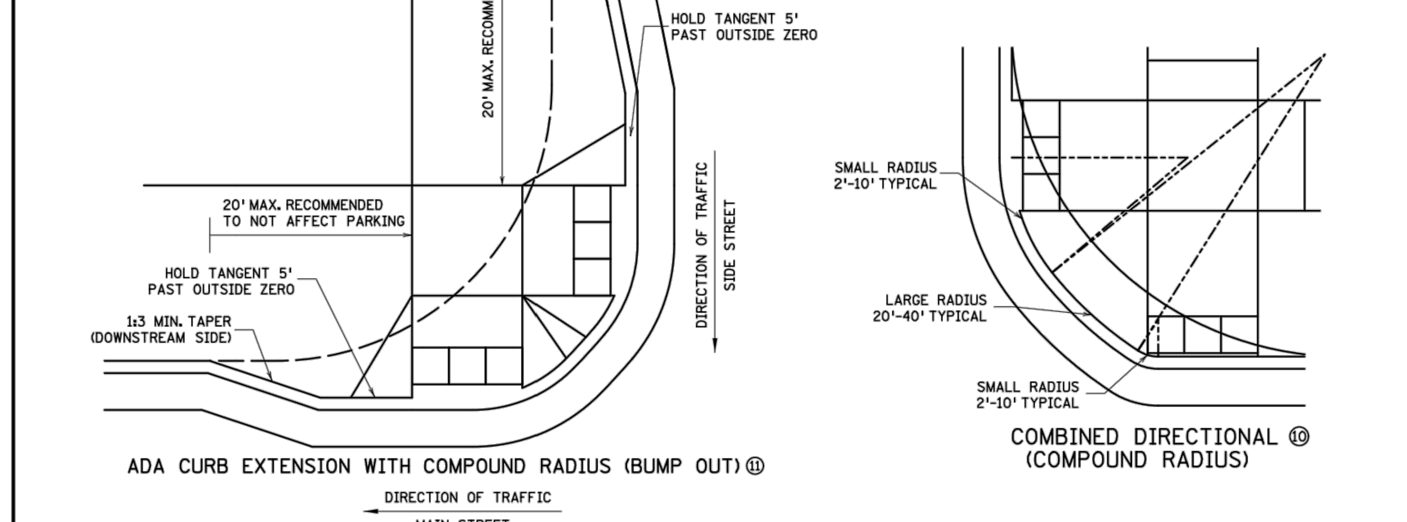

NOTES:

POSITIVE FLOW LINE DRAINAGE SHALL BE MAINTAINED THROUGH THE PEDESTRIAN ACCESS ROUTE (PAR) AT A 2% MAXIMUM.

NO PONDING SHALL BE PRESENT IN THE PAR.

ANY VERTICAL LIP THAT OCCURS AT THE FLOW LINE SHALL NOT BE GREATER THAN 1/4 INCH.

① FOR USE AT CURB CUTS WHERE THE PEDESTRIAN'S PATH OF TRAVEL IS ASSUMED PERPENDICULAR TO THE GUTTER FLOW LINE. RAMP TYPES INCLUDE: PERPENDICULAR, TIERED PERPENDICULAR, PARALLEL, AND DIAGONAL RAMPS.
② FOR USE AT CURB RAMPS WHERE THE PEDESTRIAN'S PATH OF TRAVEL IS ASSUMED NON PERPENDICULAR TO THE GUTTER FLOW LINE. RAMP TYPES INCLUDE: FANS & DEPRESSED CORNERS.
③ BEGIN GUTTER SLOPE TRANSITION 10' OUTSIDE OF ALL CURB RAMPS.
④ THERE SHALL BE NO VERTICAL DISCONTINUITIES GREATER THAN 1/4".
⑤ ELEVATION CHANGE TAKES PLACE FROM THE EXISTING TO NEW FRONT OF GUTTER. PATCH IS USED TO MATCH THE NEW GUTTER FACE INTO THE EXISTING ROADWAY.
⑥ VARIABLE WIDTH FOR DIRECTIONAL CURB APPLICATIONS. SEE SHEET 2 FOR DIRECTIONAL CURB SLOPE REQUIREMENTS.
⑦ TOP FRONT OF GUTTER SHALL BE CONSTRUCTED FLUSH WITH PROPOSED ADJACENT PAVEMENT ELEVATION. TOP 1.5" OF THE GUTTER FACE MUST BE A FORMED EDGE. PAR GUTTER SHALL NOT BE OVERLAID.
⑧ SHOULD BE USED AT VERTICALLY CONSTRAINED AREAS WHEN AT A DRAINAGE HIGH POINT OR SUPER ELEVATED ROADWAY SEGMENTS.
⑨ DRILL AND GROUT NO. 4 EPOXY-COATED 18" LONG TIE BARS AT 30" CENTER TO CENTER INTO EXISTING CONCRETE PAVEMENT 1' MINIMUM FROM ALL JOINTS.
⑩ HELPS PROVIDE TWO SEPARATE RAMPS, REDUCES THE DOME SETBACK LENGTH AND MINIMIZES DIRECTIONAL CURB. THIS RADIUS DESIGN CLOSELY FOLLOWS THE TURNING VEHICLE PATH WHILE OPTIMIZING CURB RAMP LENGTH.
⑪ CURB EXTENSIONS SHOULD BE USED IN VERTICALLY CONSTRAINED AREAS, USUALLY IN DOWNTOWN ROADWAY SEGMENTS WHERE ON-STREET PARKING IS AVAILABLE. CURB EXTENSIONS SHOULD BE CONSIDERED FOR APS INTERSECTIONS WHERE SPACE IS LIMITED.
PUSH BUTTONS MUST MEET APS CRITERIA AS DESCRIBED IN THE PUSH BUTTON LOCATION DETAIL SHEET.

REVISION:
APPROVED: 11-04-2021
JEFFREY PERKINS
OPERATIONS DIVISION

MINNESOTA DEPARTMENT OF TRANSPORTATION | STANDARD PLAN 5-297.250 | 3 OF 6 | PEDESTRIAN CURB RAMP DETAILS
THOMAS STYRBICKI, STATE DESIGN ENGINEER | APPROVED: 11-04-2021 | REVISED:
STATE PROJ. NO. (TH) SHEET NO. OF SHEETS

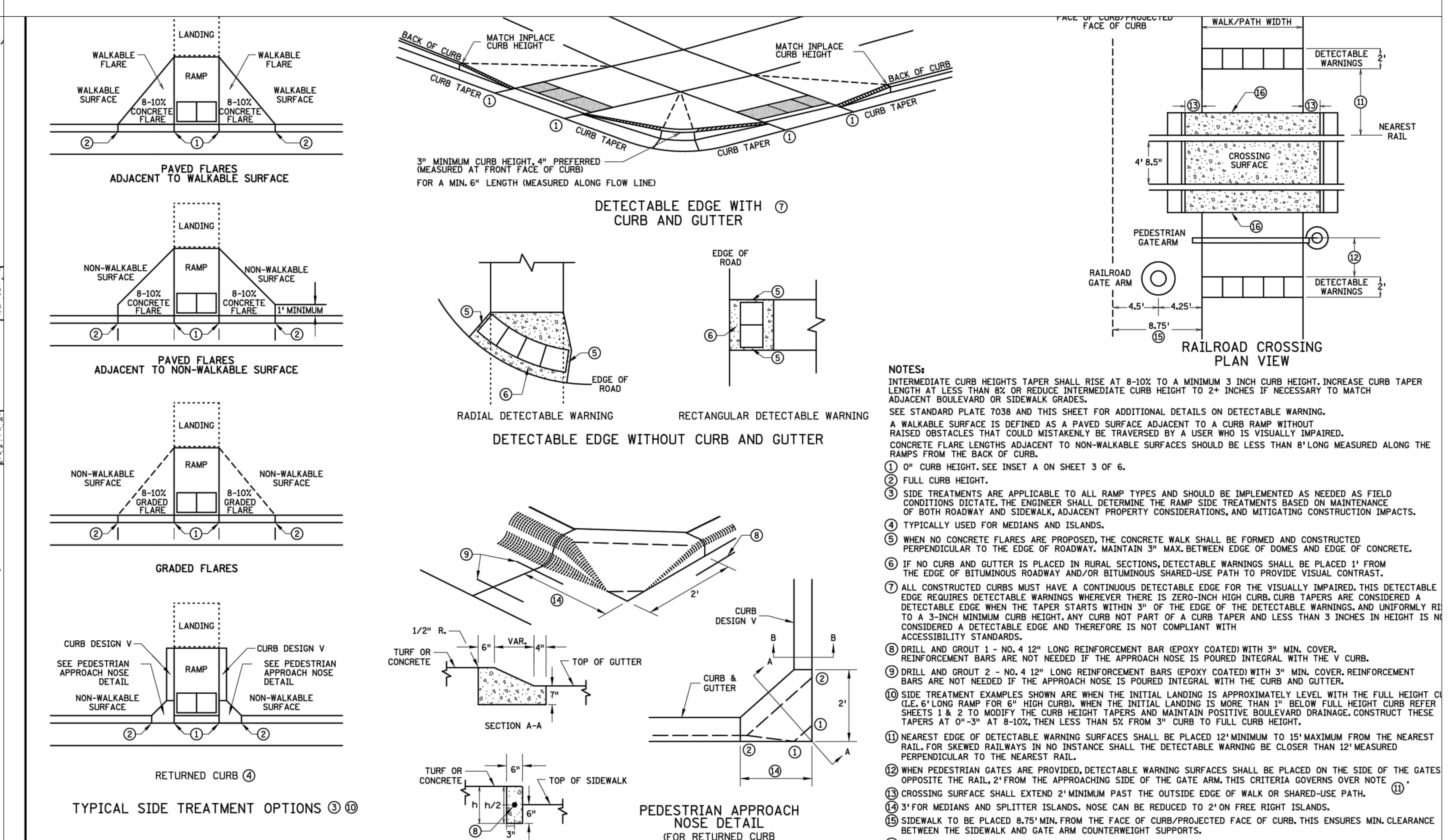

NOTES:

INTERMEDIATE CURB HEIGHTS TAPER SHALL RISE AT 8-10% TO A MINIMUM 3 INCH CURB HEIGHT. INCREASE CURB TAPER LENGTH AT LESS THAN 8% OR REDUCE INTERMEDIATE CURB HEIGHT TO 2+ INCHES IF NECESSARY TO MATCH ADJACENT BOULEVARD OR SIDEWALK GRADES.

SEE STANDARD PLATE 7038 AND THIS SHEET FOR ADDITIONAL DETAILS ON DETECTABLE WARNING.

A WALKABLE SURFACE IS DEFINED AS A PAVED SURFACE ADJACENT TO A CURB RAMP WITHOUT RAISED OBSTACLES THAT COULD MISTAKENLY BE TRAVERSED BY A USER WHO IS VISUALLY IMPAIRED.

CONCRETE FLARE LENGTHS ADJACENT TO NON-WALKABLE SURFACES SHOULD BE LESS THAN 8' LONG MEASURED ALONG THE RAMPS FROM THE BACK OF CURB.

① 0" CURB HEIGHT. SEE INSET A ON SHEET 3 OF 6.
② FULL CURB HEIGHT.
③ SIDE TREATMENTS ARE APPLICABLE TO ALL RAMP TYPES AND SHOULD BE IMPLEMENTED AS NEEDED AS FIELD CONDITIONS DICTATE. THE ENGINEER SHALL DETERMINE THE RAMP SIDE TREATMENTS BASED ON MAINTENANCE OF BOTH ROADWAY AND SIDEWALK, ADJACENT PROPERTY CONSIDERATIONS, AND MITIGATING CONSTRUCTION IMPACTS.
④ TYPICALLY USED FOR MEDIANS AND ISLANDS.
⑤ WHEN NO CONCRETE FLARES ARE PROPOSED, THE CONCRETE WALK SHALL BE FORMED AND CONSTRUCTED PERPENDICULAR TO THE EDGE OF ROADWAY. MAINTAIN 3" MAX. BETWEEN EDGE OF DOMES AND EDGE OF CONCRETE.
⑥ IF NO CURB AND GUTTER IS PLACED IN RURAL SECTIONS, DETECTABLE WARNINGS SHALL BE PLACED 1' FROM THE EDGE OF BITUMINOUS ROADWAY AND/OR BITUMINOUS SHARED-USE PATH TO PROVIDE VISUAL CONTRAST.
⑦ ALL CONSTRUCTED CURBS MUST HAVE A CONTINUOUS DETECTABLE EDGE FOR THE VISUALLY IMPAIRED. THIS DETECTABLE EDGE REQUIRES DETECTABLE WARNINGS WHEREVER THERE IS ZERO-INCH HIGH CURB. CURB TAPERS ARE CONSIDERED A DETECTABLE EDGE WHEN THE TAPER STARTS WITHIN 3" OF THE EDGE OF THE DETECTABLE WARNINGS. AND UNIFORMLY RI TO A 3-INCH MINIMUM CURB HEIGHT. ANY CURB NOT PART OF A CURB TAPER AND LESS THAN 3 INCHES IN HEIGHT IS N CONSIDERED A DETECTABLE EDGE AND THEREFORE IS NOT COMPLIANT WITH ACCESSIBILITY STANDARDS.
⑧ DRILL AND GROUT 1 - NO. 4 12" LONG REINFORCEMENT BAR (EPOXY COATED) WITH 3" MIN. COVER. REINFORCEMENT BARS ARE NOT NEEDED IF THE APPROACH NOSE IS POURED INTEGRAL WITH THE V CURB.
⑨ DRILL AND GROUT 2 - NO. 4 12" LONG REINFORCEMENT BARS (EPOXY COATED) WITH 3" MIN. COVER. REINFORCEMENT BARS ARE NOT NEEDED IF THE APPROACH NOSE IS POURED INTEGRAL WITH THE CURB AND GUTTER.
⑩ SIDE TREATMENT EXAMPLES SHOWN ARE WHEN THE INITIAL LANDING IS APPROXIMATELY LEVEL WITH THE FULL HEIGHT C (I.E. 6' LONG RAMP FOR 6" HIGH CURB). WHEN THE INITIAL LANDING IS MORE THAN 1" BELOW FULL HEIGHT CURB REFER SHEETS 1 & 2 TO MODIFY THE CURB HEIGHT TAPERS AND MAINTAIN POSITIVE BOULEVARD DRAINAGE. CONSTRUCT THESE TAPERS AT 0"-3" AT 8-10%, THEN LESS THAN 5% FROM 3" CURB TO FULL CURB HEIGHT.
⑪ NEAREST EDGE OF DETECTABLE WARNING SURFACES SHALL BE PLACED 12' MINIMUM TO 15' MAXIMUM FROM THE NEAREST RAIL. FOR SKEWED RAILWAYS IN NO INSTANCE SHALL THE DETECTABLE WARNING BE CLOSER THAN 12' MEASURED PERPENDICULAR TO THE NEAREST RAIL.
⑫ WHEN PEDESTRIAN GATES ARE PROVIDED, DETECTABLE WARNING SURFACES SHALL BE PLACED ON THE SIDE OF THE GATES OPPOSITE THE RAIL, 2' FROM THE APPROACHING SIDE OF THE GATE ARM. THIS CRITERIA GOVERNS OVER NOTE ⑪.
⑬ CROSSING SURFACE SHALL EXTEND 2' MINIMUM PAST THE OUTSIDE EDGE OF WALK OR SHARED-USE PATH.
⑭ 3' FOR MEDIANS AND SPLITTER ISLANDS. NOSE CAN BE REDUCED TO 2' ON FREE RIGHT ISLANDS.
⑮ SIDEWALK TO BE PLACED 8.75' MIN. FROM THE FACE OF CURB/PROJECTED FACE OF CURB. THIS ENSURES MIN. CLEARANCE BETWEEN THE SIDEWALK AND GATE ARM COUNTERWEIGHT SUPPORTS.
⑯ CONSTRUCT WITH EXPANSION MATERIAL PER MNDOT SPECIFICATION 3702 TYPES A-E. EXPANSION MATERIAL SHALL MATCH FULL HEIGHT OF ADJACENT CONCRETE.

REVISION:
APPROVED: 11-04-2021
JEFFREY PERKINS
OPERATIONS DIVISION

MINNESOTA DEPARTMENT OF TRANSPORTATION | STANDARD PLAN 5-297.250 | 4 OF 6 | PEDESTRIAN CURB RAMP DETAILS
THOMAS STYRBICKI, STATE DESIGN ENGINEER | APPROVED: 11-04-2021 | REVISED:
STATE PROJ. NO. (TH) SHEET NO. OF SHEETS

N:\0024429.02\DWG\CIVIL\UTILITY\0024429.02S-DT.DWG

OAK CREEK 2ND ADDITION

DESIGNED:	FDH II
CHECKED:	FDH II
DRAWN:	KFP/DJW
HORIZONTAL SCALE:	
VERTICAL SCALE:	

INITIAL ISSUE: 02/07/23
REVISIONS:

PREPARED FOR:

DR HORTON, INC. - MINNESOTA
20860 KENBRIDGE COURT, SUITE 100
LAKEVILLE, MINNESOTA 55044

I HEREBY CERTIFY THAT THIS PLAN WAS PREPARED BY ME OR UNDER MY DIRECT SUPERVISION AND THAT I AM A DULY LICENSED PROFESSIONAL ENGINEER UNDER THE LAWS OF THE STATE OF MINNESOTA
FRANCIS D. HAGEN
DATE: 02/07/23 LICENSE NO. 17716

OAK CREEK 2ND ADDITION
CHASKA, MN

Westwood
Phone (952) 937-5150 12701 Whitewater Drive, Suite #300
Fax (952) 937-5822 Minnetonka, MN 55343
Toll Free (888) 937-5150 westwoodps.com
Westwood Professional Services, Inc.

DETAILS

PROJECT NUMBER: 0024429.02

SHEET NUMBER: 19 OF 20
DATE: 02/07/23

© 2022 Westwood Professional Services, Inc.

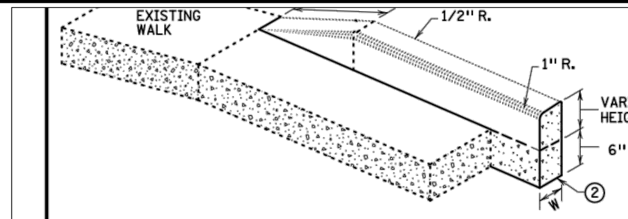

V CURB ADJACENT TO LANDSCAPE
CURB WITHIN SIDEWALK LIMITS

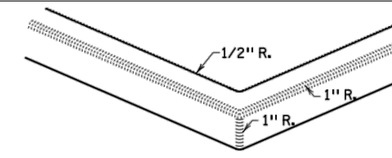

V CURB INTERSECTION

CONCRETE CURB DESIGN V	
CURB HEIGHT H	CURB WIDTH W
<6"	4"
≥6"	6"

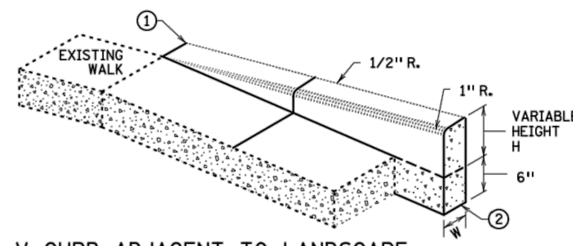

V CURB ADJACENT TO LANDSCAPE
CURB OUTSIDE SIDEWALK LIMITS

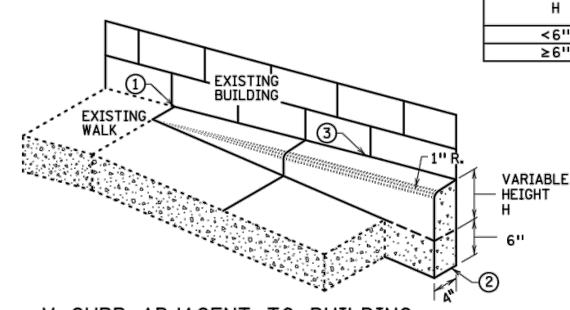

V CURB ADJACENT TO BUILDING OR BARRIER

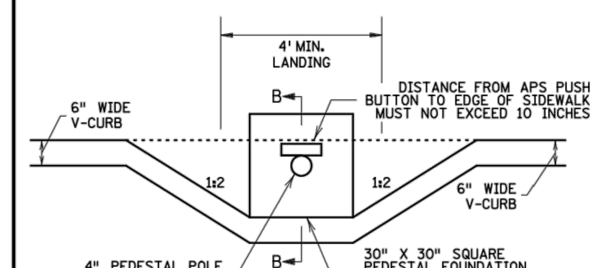

PLAN VIEW

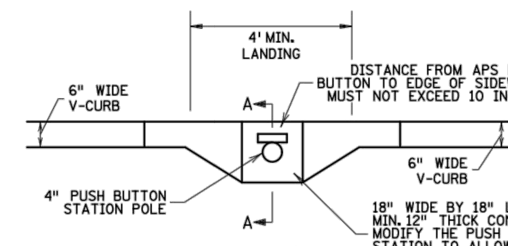

PLAN VIEW

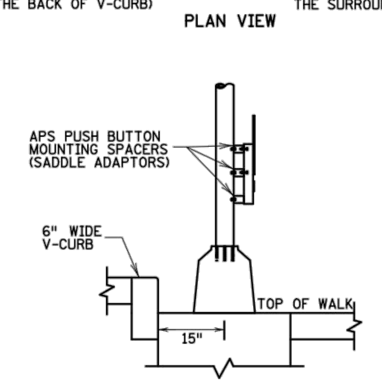

SECTION B-B
SIGNAL PEDESTAL & PUSH BUTTON (V-CURB)

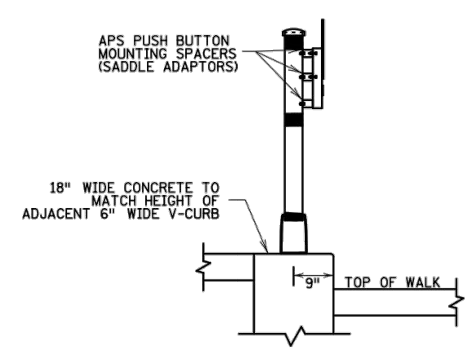

SECTION A-A
PUSH BUTTON STATION (V-CURB)

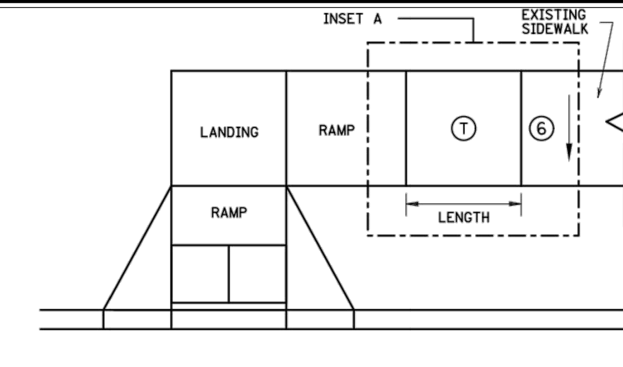

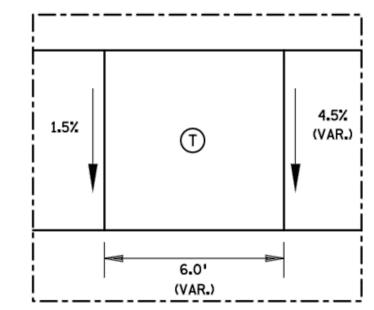

TRANSITION PANEL ④⑤

INSET A

NOTES:

A WALKABLE FLARE IS AN 8-10% CONCRETE FLARE THAT IS REQUIRED WHEN THE FLARE IS ADJACENT TO A WALKABLE SURFACE, OR WHEN THE PEDESTRIAN PATH OF TRAVEL OF A PUSH BUTTON TRAVERSES THE FLARE.

ALL V CURB CONTRACTION JOINTS SHALL MATCH CONCRETE WALK JOINTS.

WHERE RIGHT-OF-WAY ALLOWS, USE OF V CURB SHOULD BE MINIMIZED. GRADING ADJACENT TURF OR SLOPING ADJACENT PAVEMENT IS PREFERRED.

V CURB SHALL BE PLACED OUTSIDE THE SIDEWALK LIMITS WHEN RIGHT OF WAY ALLOWS.

V CURB NEXT TO BUILDING SHALL BE A 4" WIDTH AND SHALL MATCH PREVIOUS TOP OF SIDEWALK ELEVATIONS.

① END TAPERS AT TRANSITION SECTION SHALL MATCH INPLACE SIDEWALK GRADES.
② ALL V CURB SHALL MATCH BOTTOM OF ADJACENT WALK.
③ CONSTRUCT USING APPROVED EXPANSION MATERIAL PER MNDOT TYPE A-E EXPANSION. LEAVE A MINIMUM ½" TOP GAP AND SEAL WITH MNDOT APPROVED SILICONE PER MNDOT SPEC 3722.
④ THE MAX. RATE OF CROSS SLOPE TRANSITIONING IS 1' LINEAR FOOT OF SIDEWALK PER HALF PERCENT CROSS SLOPE. WHEN PAR WIDTH IS GREATER THAN 6' OR THE RUNNING SLOPE IS GREATER THAN 5%, DOUBLE THE CALCULATED TRANSITION LENGTH.
⑤ TRANSITION PANELS ARE TO ONLY BE USED AFTER THE RAMP, OR IF NEEDED, LANDING ARE AT THE FULL CURB HEIGHT (TYPICAL SECTION).
⑥ EXISTING CROSS SLOPE GREATER THAN 2.0%.

LEGEND

THESE LONGITUDINAL SLOPE RANGES SHALL BE THE STARTING POINT. IF SITE CONDITIONS WARRANT, LONGITUDINAL SLOPES UP TO 8.3% OR FLATTER ARE ALLOWED.

Ⓢ INDICATES PEDESTRIAN RAMP - SLOPE SHALL BE BETWEEN 5.0% MINIMUM AND 8.3% MAXIMUM IN THE DIRECTION SHOWN AND THE CROSS SLOPE SHALL NOT EXCEED 2.0%.

▨ LANDING AREA - 4' X 4' MIN. (5' X 5' MIN. PREFERRED) DIMENSIONS AND MAX 2.0% SLOPE IN ALL DIRECTIONS. LANDING SHALL BE FULL WIDTH OF INCOMING PARS.

Ⓣ TRANSITION PANEL(S) - TO BE USED FOR TRANSITIONING THE CROSS-SLOPE OF A RAMP TO THE EXISTING WALK CROSS-SLOPE. RATE OF TRANSITION SHOULD BE 0.5% PER 1 LINEAR FOOT OF WALK. SEE THIS SHEET FOR ADDITIONAL INFORMATION.

REVISION:
APPROVED: 11-04-2021
JEFFREY PERKINS
OPERATIONS DIVISION

MINNESOTA DEPARTMENT OF TRANSPORTATION
STANDARD PLAN 5-297.250 | 5 OF 6
APPROVED: 11-04-2021
REVISED:
THOMAS STYRBICKI STATE DESIGN ENGINEER
PEDESTRIAN CURB RAMP DETAILS
STATE PROJ. NO. (TH) SHEET NO. OF SHEETS

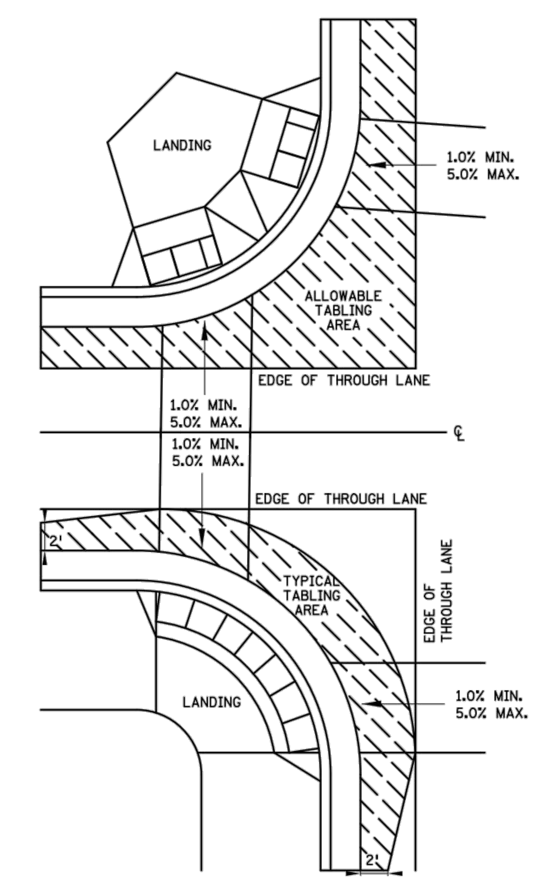

CURB LINE AND ROAD CROSSING ADJUSTMENTS

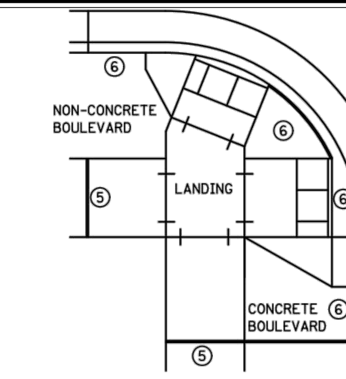

EXPANSION MATERIAL PLACEMENT FOR CONCRETE ROADWAYS

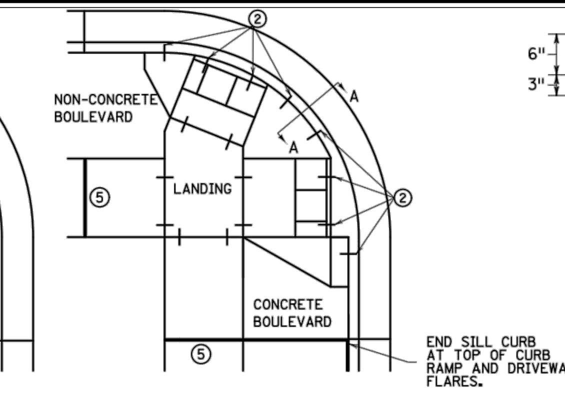

CURB LINE REINFORCEMENT ④ PLACEMENT ON BITUMINOUS ROADWAYS

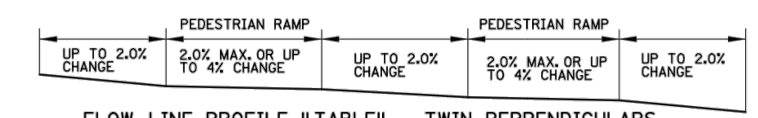

FLOW LINE PROFILE "TABLE" - TWIN PERPENDICULARS

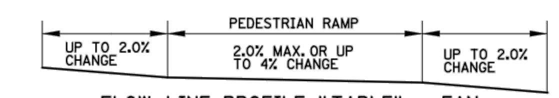

FLOW LINE PROFILE "TABLE" - FAN

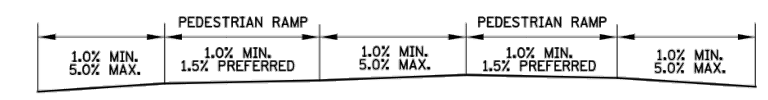

FLOW LINE PROFILE RAISE - TWIN PERPENDICULARS

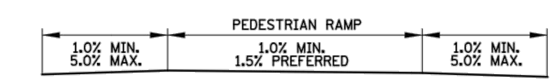

FLOW LINE PROFILE RAISE - FAN

GENERAL NOTES:

"TABLING" OF CROSSWALKS MEANS MAINTAINING LESS THAN 2% CROSS SLOPE WITHIN A CROSSWALK, IS REQUIRED WHEN A ROADWAY IS IN A STOP OR YIELD CONDITION AND THE PROJECT SCOPE ALLOWS.

RECONSTRUCTION PROJECTS: ON FULL PAVEMENT REPLACEMENT PROJECTS "TABLING" OF ENTIRE CROSSWALK SHALL OCCUR WHEN FEASIBLE.

MILL & OVERLAY PROJECTS: "TABLING" OF FLOW LINES, IN FRONT OF THE PEDESTRIAN RAMP, IS REQUIRED WHEN THE EXISTING FLOW LINE IS GREATER THAN 2%. WARPING OF THE BITUMINOUS PAVEMENT CAN NOT EXTEND INTO THE THROUGH LANE. TABLE THE FLOW LINE TO 2% OR AS MUCH AS POSSIBLE WHILE ADHERING TO THE FOLLOWING CRITERIA:
1) 1.0% MIN. CROSS-SLOPE OF THE ROAD
2) 5.0% MAX. CROSS-SLOPE OF THE ROAD
3) "TABLE" FLOW LINE UP TO 4% CHANGE FROM EXISTING SLOPE IN FRONT OF PEDESTRIAN RAMP
4) UP TO 2% CHANGE IN FLOW LINE FROM EXISTING SLOPE BEYOND THE PEDESTRIAN CURB RAMP

STAND-ALONE ADA RETROFITS: FOLLOW MILL & OVERLAY CRITERIA ABOVE HOWEVER ALL PAVEMENT WARPING IS DONE WITH BITUMINOUS PATCHING ON BITUMINOUS ROADWAYS AND FULL-DEPTH APRON REPLACEMENT ON CONCRETE ROADWAYS.

RAISING OF CURB LINES SHOULD OCCUR IN VERTICALLY CONSTRAINED AREAS. RAISE THE CURB LINES ENOUGH TO ALLOW COMPLIANT RAMPS OR AS MUCH AS POSSIBLE WHILE ADHERING TO THE FOLLOWING CRITERIA:
1) 1.0% MIN. AND 5.0% MAXIMUM CROSS-SLOPE OF THE ROAD
2) 1.0% MIN. FLOW LINE (ON EITHER SIDE OF PEDESTRIAN RAMP) TO MAINTAIN POSITIVE DRAINAGE
3) 5.0% RECOMMENDED MAX. FLOW LINE
4) LONGITUDINAL THROUGH LANE ROADWAY TAPERS SHOULD BE 1" VERTICAL PER 15' HORIZONTAL

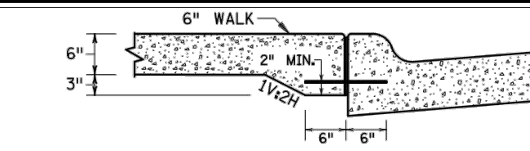

SECTION VIEW A-A
THICKENED SECTION THROUGH CURB RAMP FLARES

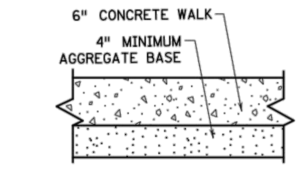

TYPICAL SIDEWALK SECTION WITHIN INTERSECTION CORNER

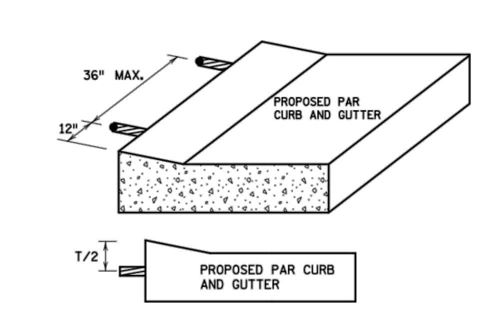

CURB RAMP REINFORCEMENT DETAILS ②④

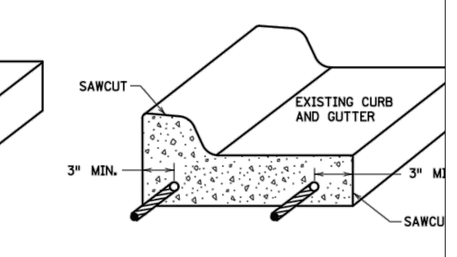

CURB AND GUTTER REINFORCEMENT ③

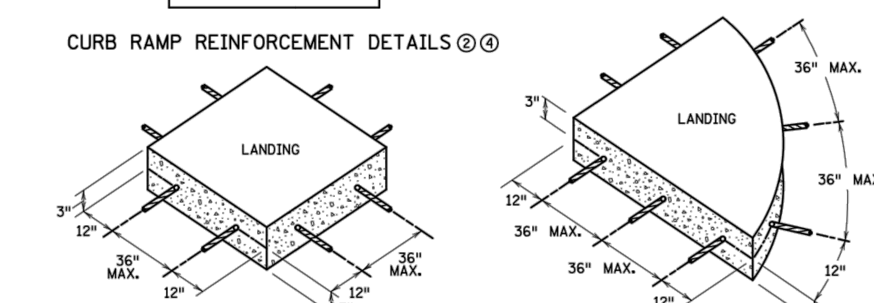

SEPARATE LANDING POUR REINFORCEMENT ①②

NOTES:

① TO ENSURE RAMPS AND LANDINGS ARE PROPERLY CONSTRUCTED, ALL INITIAL LANDINGS AT A TOP OF A RAMPED SURFACE (RUNNING SLOPE GREATER THAN 2%) SHALL BE FORMED AND PLACED SEPARATELY IN AN INDEPENDENT CONCRETE POUR. FOLLOW SIDEWALK REINFORCEMENT DETAILS ON THIS SHEET FOR ALL SEPARATELY POURED INITIAL LANDINGS.
② DRILL AND GROUT NO. 4 12" LONG REINFORCEMENT BARS (EPOXY COATED) AT 36" MAXIMUM CENTER TO CENTER MINIMUM 12" SPACING FROM CONSTRUCTION JOINTS. BARS TO BE ADJUSTED TO MATCH RAMP GRADE. BARS TO BE PAID BY EACH.
③ DRILL AND GROUT 2 - NO. 4 X 12" LONG (6" EMBEDDED) REINFORCEMENT BARS (EPOXY COATED). REINFORCEMENT REQUIRED FOR ALL CONSTRUCTION JOINTS. BARS TO BE PAID BY EACH.
④ THIS CURB LINE REINFORCEMENT DETAIL SHALL BE USED ON BITUMINOUS ROADWAYS. FOR CONCRETE ROADWAYS, SEE NOTE 6.
⑤ CONSTRUCT WITH EXPANSION MATERIAL PER MNDOT SPECIFICATION 3702 TYPES A-E. EXPANSION MATERIAL SHALL MATCH FULL HEI OF ADJACENT CONCRETE.
⑥ USE AN APPROVED TYPE F (1/4 INCH THICK) SEPARATION MATERIAL. SEPARATION MATERIAL SHALL MATCH FULL HEIGHT DIMENSION ADJACENT CONCRETE.

REVISION:
APPROVED: 11-04-2021
JEFFREY PERKINS
OPERATIONS DIVISION

MINNESOTA DEPARTMENT OF TRANSPORTATION
STANDARD PLAN 5-297.250 | 6 OF 6
APPROVED: 11-04-2021
REVISED:
THOMAS STYRBICKI STATE DESIGN ENGINEER
PEDESTRIAN CURB RAMP DETAILS
STATE PROJ. NO. (TH) SHEET NO. OF SHEETS

Call 48 Hours before digging:
811 or call811.com
Common Ground Alliance

N:\0024429.02\DWG\CIVIL\UTILITY\0024429.02S-DT.DWG

OAK CREEK 2ND ADDITION

DESIGNED: FDH II
CHECKED: FDH II
DRAWN: KFP/DJW
HORIZONTAL SCALE:
VERTICAL SCALE:

INITIAL ISSUE: 02/07/23
REVISIONS:

PREPARED FOR:
DR HORTON, INC. - MINNESOTA
20860 KENBRIDGE COURT, SUITE 100
LAKEVILLE, MINNESOTA 55044

I HEREBY CERTIFY THAT THIS PLAN WAS PREPARED BY ME OR UNDER MY DIRECT SUPERVISION AND THAT I AM A DULY LICENSED PROFESSIONAL ENGINEER UNDER THE LAWS OF THE STATE OF MINNESOTA
FRANCIS D. HAGEN
DATE: 02/07/23 LICENSE NO. 17716

OAK CREEK 2ND ADDITION
CHASKA, MN

Westwood
Phone (952) 937-5150 12701 Whitewater Drive, Suite #300
Fax (952) 937-5822 Minnetonka, MN 55343
Toll Free (888) 937-5150 westwoodps.com
Westwood Professional Services, Inc.

DETAILS
PROJECT NUMBER: 0024429.02

SHEET NUMBER: 20 OF 20
DATE: 02/07/23

© 2022 Westwood Professional Services, Inc.

CONSTRUCTION PLANS

FOR

FINAL LANDSCAPE PLANS

FOR

OAK CREEK
CHASKA, MINNESOTA

Vicinity Map
(NOT TO SCALE)

PREPARED FOR:

DR HORTON, INC. - MINNESOTA
20860 KENBRIDGE COURT, SUITE 100
LAKEVILLE, MINNESOTA 55044
CONTACT: RICK THOMSON
PHONE: 952-985-7430
EMAIL: RLTHOMSON@DRHORTON.COM

PREPARED BY:

Westwood

Phone (952) 937-5150 12701 Whitewater Drive, Suite #300
Fax (952) 937-5822 Minnetonka, MN 55343
Toll Free (888) 937-5150 westwoodps.com

Westwood Professional Services, Inc.

PROJECT NUMBER: 0024429.00
CONTACT: FRANCIS D. HAGEN

SHEET INDEX

Sheet List Table	
SHEET NUMBER	SHEET TITLE
1	COVER
2	OVERALL LANDSCAPE PLAN
3	LANDSCAPE PLAN
4	LANDSCAPE PLAN
5	LANDSCAPE PLAN
6	LANDSCAPE PLAN - NOTES - DETAILS
7	LANDSCAPE DETAILS

NO.	DATE	REVISION	SHEETS
1	05/24/22	CITY COMMENTS	ALL
.	06/21/22	WATERSHED COMMENTS	ALL
	.	.	
	.	.	
	.	.	
	.	.	
	.	.	
	.	.	
	.	.	
	.	.	

CONSTRUCTION PLANS
FOR
FINAL LANDSCAPE PLANS
FOR
OAK CREEK
CHASKA, MINNESOTA

INITIAL SUBMITTAL DATE: 05/02/22 SHEET: 1 OF 7

N:\0024429.00\DWG\CIVIL\FINAL\LANDSCAPE\0024429L-CV01.DWG

OAK CREEK

© 2022 Westwood Professional Services, Inc.

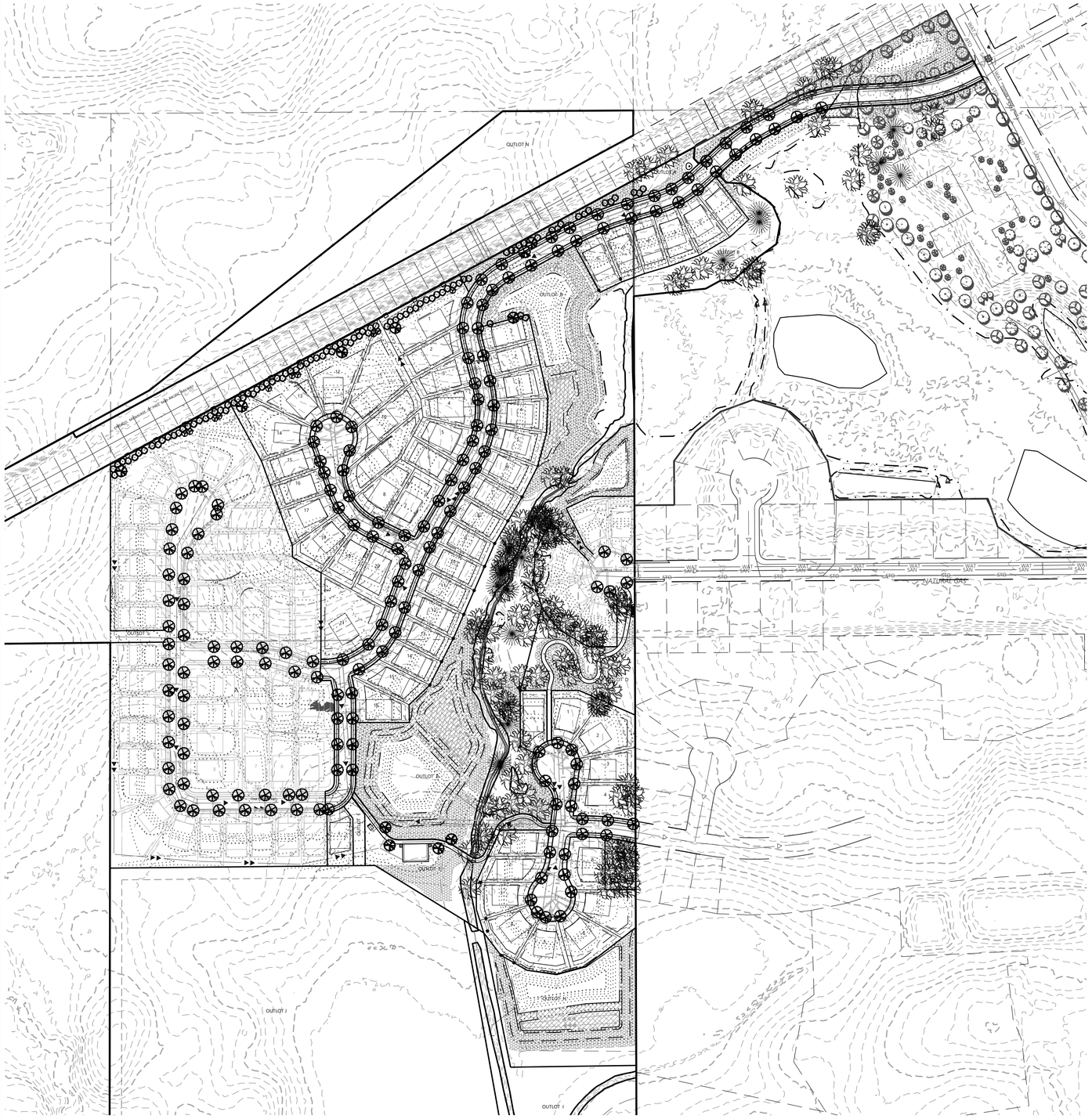

Call 48 Hours before digging:

811 or call811.com

Common Ground Alliance

Plant Schedule

SYMBOL	QTY.	COMMON/BOTANICAL NAME	SIZE	SPACING O.C.	SPACING O.C.
OVERSTORY DECIDUOUS TREES - 177					
ABM	22	Autumn Blaze Maple / Acer x freemanii 'Jeffersred'	2.5" BB	AS SHOWN	H 50'-60' W 40'
SGM	2	Sienna Glen Maple / Acer x freemanii 'Sienna'	2.5" BB	AS SHOWN	H 40'-50' W 35'-40'
RSM	1	Red Sunset Maple / Acer rubrum 'Franksred'	2.5" BB	AS SHOWN	H 45' W 35'
FFM	18	Fall Fiesta Maple / Acer saccharum 'Bailsta'	2.5" BB	AS SHOWN	H 50'-75' W 50'
SKH	10	Skyline Honeylocust / Gleditsia tricanthos var. inermis 'Skycole'	2.5" BB	AS SHOWN	H 50' W 35'-40'
REO	28	Red Oak / Quercus rubra	2.5" BB	AS SHOWN	H 50'-70' W 40'-50'
NPO	10	Northern Pin Oak / Quercus ellipsoidalis	2.5" BB	AS SHOWN	H 50'-60' W 40'-50'
SWO	2	Swamp White Oak / Quercus bicolor	2.5" BB	AS SHOWN	H 50'-60' W 40'
PRE	11	Princeton Elm / Ulmus americana 'Princeton'	2.5" BB	AS SHOWN	H 60'-80' W 40'-60'
ACE	17	Accolade Elm / Ulmus japonica x wilsoniana 'Morton'	2.5" BB	AS SHOWN	H 70' W 40'-50'
FRL	21	Frontyard Linden / Tilia americana 'Frontyard'	2.5" BB	AS SHOWN	H 60'-70' W 30'-40'
REL	14	Redmond Linden / Tilia americana 'Redmond'	2.5" BB	AS SHOWN	H 40'-60' W 30'
AGG	3	Autumn Gold Ginkgo / Ginkgo biloba 'Autumn Gold'	2.5" BB	AS SHOWN	H 50' W 30'
HAK	16	Hackberry / Celtis occidentalis	2.5" BB	AS SHOWN	H 50'-75' W 50'
RIB	2	River Birch / Betula nigra	10' HT. BB CLUMP	AS SHOWN	H 50'-75' W 50'
BUFFER EVERGREEN TREES - 93					
BHS	14	Black Hills Spruce / Picea glauca densata	6' HT., BB	AS SHOWN	H 30'-40' W 20'-30'
NOS	8	Norway Spruce / Picea abies	6' HT., BB	AS SHOWN	H 60'-80' W 25'-30'
COS	10	Colorado Spruce / Picea pungens	6' HT., BB	AS SHOWN	H 40'-60' W 15'-30'
WHP	6	White Pine / Pinus strobus	6' HT., BB	AS SHOWN	H 50'-80' W 30'-40'
NOP	16	Norway Pine / Pinus resinosa	6' HT., BB	AS SHOWN	H 60'-80' W 25'-30'
POP	16	Ponderosa Pine / Pinus ponderosa	6' HT., BB	AS SHOWN	H 60'-80' W 25'-30'
COF	23	Concolor Fir / Abies concolor	6' HT., BB	AS SHOWN	H 40'-50' W 15'-30'
TEA	6	Techny Arborvitae / Thuja occidentalis 'Techny'	4' HT., BB	5' O.C.	H 10'-15' W 6'-8'
ORNAMENTAL TREES - 10					
TCH	2	Thornless Cockspur Hawthorn / Crataegus crusgalli 'Inermis'	2" BB	AS SHOWN	H 15'-20' W 15'-20'
JTL	3	Japanese Tree Lilac / Syringa reticulata	6' HT., BB CLUMP	AS SHOWN	H 25'-30' W 20'-25'
ALS	2	Allegheny Serviceberry / Amelanchier laevis	6' HT., BB CLUMP	AS SHOWN	H 15'-25' W 15'-25'
QUA	1	Quaking Aspen / Populus tremuloides	2" BB	AS SHOWN	H 40'-60' W 20'-30'
PRC	2	Prairie Rose Crab / Malus 'Prairie Rose'	2" BB	AS SHOWN	H 20' W 20'

NOTES: QUANTITIES ON PLAN SUPERSEDE LIST QUANTITIES IN THE EVENT OF A DISCREPANCY.
REFER TO FINAL LANDSCAPE PLANS FOR SPECIES LOCATIONS AND QUANTITIES.

Single Family Landscape Requirements

SINGLE FAMILY RESIDENTIAL SUBDIVISION REQUIREMENTS: 227 TREES

- ONE OVERSTORY DECIDUOUS TREE PER EVERY FIFTY (50) FEET ALONG PUBLIC STREETS, ON EACH SIDE, MINIMUM 2 $\frac{1}{2}$" CALIPER. THE TREES MAY BE DISTRIBUTED THROUGHOUT THE SUBDIVISION AND NEED NOT NECESSARILY BE SPACED FIFTY (50) FEET APART. (11,351 LINEAR FEET OF FRONTAGE)

Single Family Landscape Provisions

TOTAL SINGLE FAMILY LANDSCAPING PROVIDED:	270 TREES
* STREET TREES:	164 TREES
* BUFFER DECIDUOUS TREES:	10 TREES
* BUFFER EVERGREEN TREES:	93 TREES
* BUFFER ORNAMENTAL TREES:	10 TREES

Native Seeding Legend

WET MEADOWS S & W
SEED MIX (34-271)
TOTAL AREA (1.0 AC)

STORMWATER NATIVE
SEED MIX (33-261)
TOTAL AREA (2.3 AC)

MESIC PRAIRIE GENERAL
SEED MIX (35-241)
TOTAL AREA (4.9 AC)

* ALL DISTURBED AREAS TO BE SODDED UNLESS NOTED OTHERWISE

* DISTURBANCE IN COUNTY R.O.W. SHOULD BE RESEEDED WITH LOW MAINTENANCE TURF.

NOTES:

1. TIMING OF PLANT INSTALLATION WILL BE DEPENDENT UPON SEASON AND PLANT AVAILABILITY.
2. ACTUAL LOCATION OF PLANT MATERIAL IS SUBJECT TO FIELD AND SITE CONDITIONS.
3. NO PLANTING WILL BE INSTALLED UNTIL ALL GRADING AND CONSTRUCTION HAS BEEN COMPLETED IN THE IMMEDIATE AREA.
4. ALL STREET TREES SHALL BE INSTALLED IN FRONT OF INDIVIDUAL SINGLE FAMILY LOTS 2.5' FROM BACK OF CURB AND IN FRONT OF SIDEWALK IN THE BOULEVARD. STREET TREES SHALL BE PLANTED IN A LOCATION THAT DOES NOT INTERFERE WITH CURBSTOPS, INDIVIDUAL SEWER & WATER CONNECTIONS, OR DRIVEWAY LOCATIONS.

Plant Legend

OVERSTORY DECIDUOUS STREET TREE

OVERSTORY DECIDUOUS TREE

BUFFER EVERGREEN TREE

BUFFER ORNAMENTAL TREE

EXISTING DECIDUOUS TREE TO REMAIN

EXISTING CONIFEROUS TREE TO REMAIN

N

1" = 150'

0' 150' 300' 450'

CONSTRUCTION PLANS

OAK CREEK

N:\0024429.00\DWG\CIVIL\FINALLLANDSCAPE\0024429L-PLF01.DWG

DESIGNED: .
CHECKED: .
DRAWN: .
HORIZONTAL SCALE: 150'
VERTICAL SCALE: 30' OR 15'

INITIAL ISSUE: 05/02/22
REVISIONS:
1 05/24/22 CITY COMMENTS
2 06/21/22 WATERSHED COMMENTS
3 . .
4 . .
5 . .

PREPARED FOR:

DR HORTON, INC. - MINNESOTA

20860 KENBRIDGE COURT, SUITE 100
LAKEVILLE, MINNESOTA 55044

I HEREBY CERTIFY THAT THIS PLAN WAS PREPARED BY ME OR UNDER MY DIRECT SUPERVISION AND THAT I AM A DULY LICENSED LANDSCAPE ARCHITECT UNDER THE LAWS OF THE STATE OF MINNESOTA

NICHOLAS T. MEYER

DATE: 06/22/22 LICENSE NO. 53774

OAK CREEK

CHASKA, MINNESOTA

Westwood

Phone (952) 937-5150 12701 Whitewater Drive, Suite #300
Fax (952) 937-5822 Minnetonka, MN 55343
Toll Free (888) 937-5150 westwoodps.com

Westwood Professional Services, Inc.

OVERALL LANDSCAPE PLAN

PROJECT NUMBER: 0024429.00

SHEET NUMBER: 2 OF 7

DATE: 06/22/22

© 2022 Westwood Professional Services, Inc.

Call 48 Hours before digging:
811 or call811.com
Common Ground Alliance

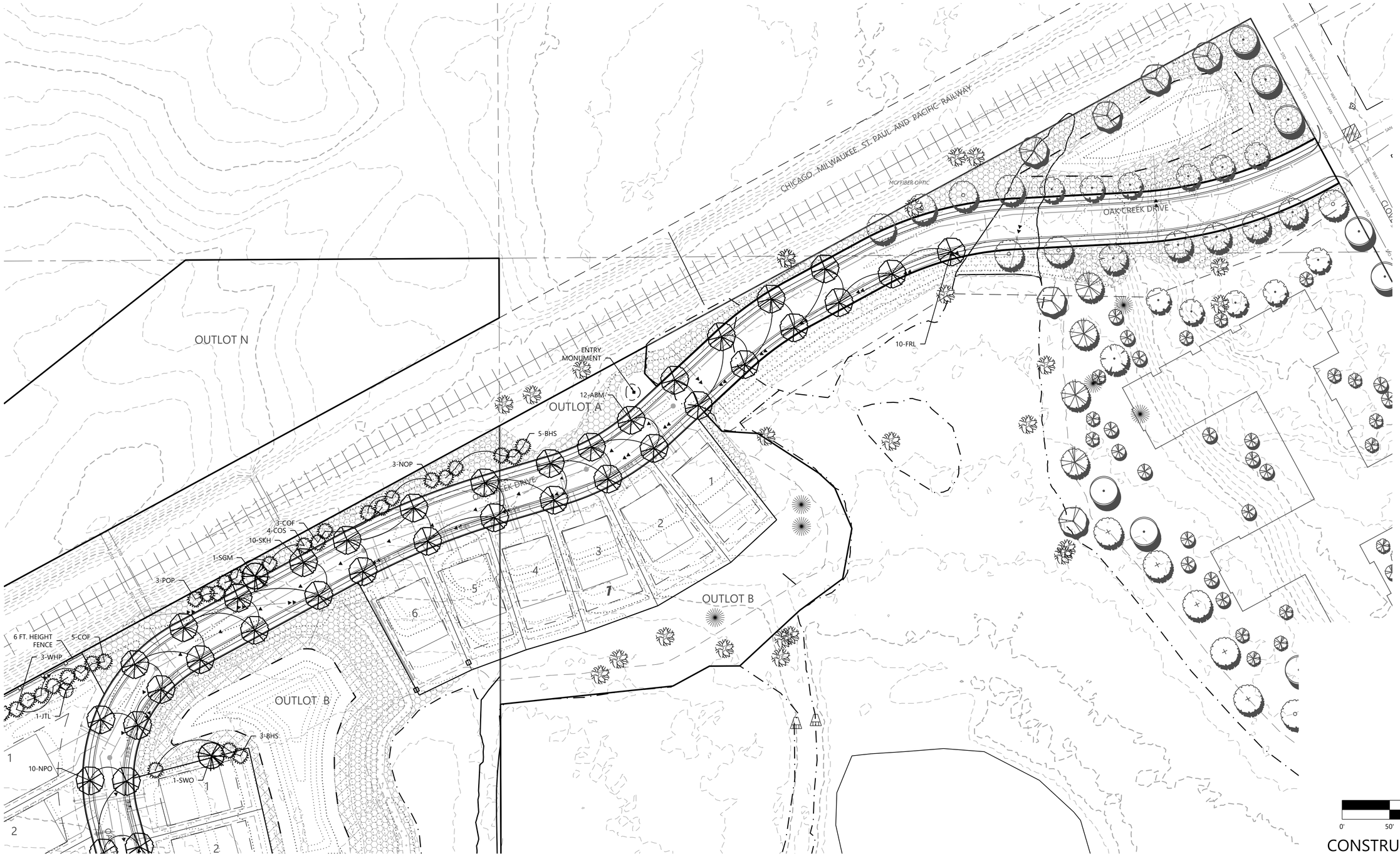

CONSTRUCTION PLANS

N:\0024429.00\DWG\CIVIL\FINAL\LANDSCAPE\0024429L-PLP01.DWG

OAK CREEK

DESIGNED:	.
CHECKED:	.
DRAWN:	.
HORIZONTAL SCALE:	###########
VERTICAL SCALE:	### OR ###

INITIAL ISSUE: 05/02/22
REVISIONS:

1	05/24/22	CITY COMMENTS
2	06/21/22	WATERSHED COMMENTS
3	.	.
4	.	.
5	.	.

PREPARED FOR:

DR HORTON, INC. - MINNESOTA

20860 KENBRIDGE COURT, SUITE 100
LAKEVILLE, MINNESOTA 55044

I HEREBY CERTIFY THAT THIS PLAN WAS PREPARED BY ME OR UNDER MY DIRECT SUPERVISION AND THAT I AM A DULY LICENSED LANDSCAPE ARCHITECT UNDER THE LAWS OF THE STATE OF MINNESOTA

Nicholas Meyer

NICHOLAS T. MEYER

DATE: 06/22/22 LICENSE NO. 53774

OAK CREEK

CHASKA, MINNESOTA

Westwood

Phone (952) 937-5150 12701 Whitewater Drive, Suite #300
Fax (952) 937-5822 Minnetonka, MN 55343
Toll Free (888) 937-5150 westwoodps.com

Westwood Professional Services, Inc.

LANDSCAPE PLAN

PROJECT NUMBER: 0024429.00

SHEET NUMBER: 3 OF 7

DATE: 06/22/22

© 2022 Westwood Professional Services, Inc.

Call 48 Hours before digging:
811 or call811.com
Common Ground Alliance

CONSTRUCTION PLANS

N:\0024429.00\DWG\CIVIL\FINAL\LANDSCAPE\0024429L-PLF01.DWG

OAK CREEK

DESIGNED:	.
CHECKED:	.
DRAWN:	.
HORIZONTAL SCALE:	###########
VERTICAL SCALE:	### OR ###

INITIAL ISSUE: 05/02/22
REVISIONS:

1	05/24/22	CITY COMMENTS
2	06/21/22	WATERSHED COMMENTS
3	.	.
4	.	.
5	.	.

PREPARED FOR:

DR HORTON, INC. - MINNESOTA

20860 KENBRIDGE COURT, SUITE 100
LAKEVILLE, MINNESOTA 55044

I HEREBY CERTIFY THAT THIS PLAN WAS PREPARED BY ME OR UNDER MY DIRECT SUPERVISION AND THAT I AM A DULY LICENSED LANDSCAPE ARCHITECT UNDER THE LAWS OF THE STATE OF MINNESOTA

Nicholas Meyer

NICHOLAS T. MEYER

DATE: 06/22/22 LICENSE NO. 53774

OAK CREEK

CHASKA, MINNESOTA

Westwood

Phone (952) 937-5150 12701 Whitewater Drive, Suite #300
Fax (952) 937-5822 Minnetonka, MN 55343
Toll Free (888) 937-5150 westwoodps.com

Westwood Professional Services, Inc.

LANDSCAPE PLAN

PROJECT NUMBER: 0024429.00

SHEET NUMBER: 4 OF 7

DATE: 06/22/22

© 2022 Westwood Professional Services, Inc.

Call 48 Hours before digging:
811 or call811.com
Common Ground Alliance

1" = 50'
0' 50' 100' 150'

CONSTRUCTION PLANS

N:\0024429.00\DWG\CIVIL\FINAL\LANDSCAPE\0024429L-PLF01.DWG

OAK CREEK

DESIGNED: .
CHECKED: .
DRAWN: .
HORIZONTAL SCALE: ##########
VERTICAL SCALE: ### OR ###

INITIAL ISSUE: 05/02/22
REVISIONS:
1 05/24/22 CITY COMMENTS
2 06/21/22 WATERSHED COMMENTS
3 . .
4 . .
5 . .

PREPARED FOR:

DR HORTON, INC. - MINNESOTA
20860 KENBRIDGE COURT, SUITE 100
LAKEVILLE, MINNESOTA 55044

I HEREBY CERTIFY THAT THIS PLAN WAS PREPARED BY ME OR UNDER MY DIRECT SUPERVISION AND THAT I AM A DULY LICENSED LANDSCAPE ARCHITECT UNDER THE LAWS OF THE STATE OF MINNESOTA

Nicholas T. Meyer
NICHOLAS T. MEYER
DATE: 06/22/22 LICENSE NO. 53774

OAK CREEK
CHASKA, MINNESOTA

Westwood
Phone (952) 937-5150 12701 Whitewater Drive, Suite #300
Fax (952) 937-5822 Minnetonka, MN 55343
Toll Free (888) 937-5150 westwoodps.com
Westwood Professional Services, Inc.

LANDSCAPE PLAN

PROJECT NUMBER: 0024429.00

SHEET NUMBER: 5 OF 7
DATE: 06/22/22

© 2022 Westwood Professional Services, Inc.

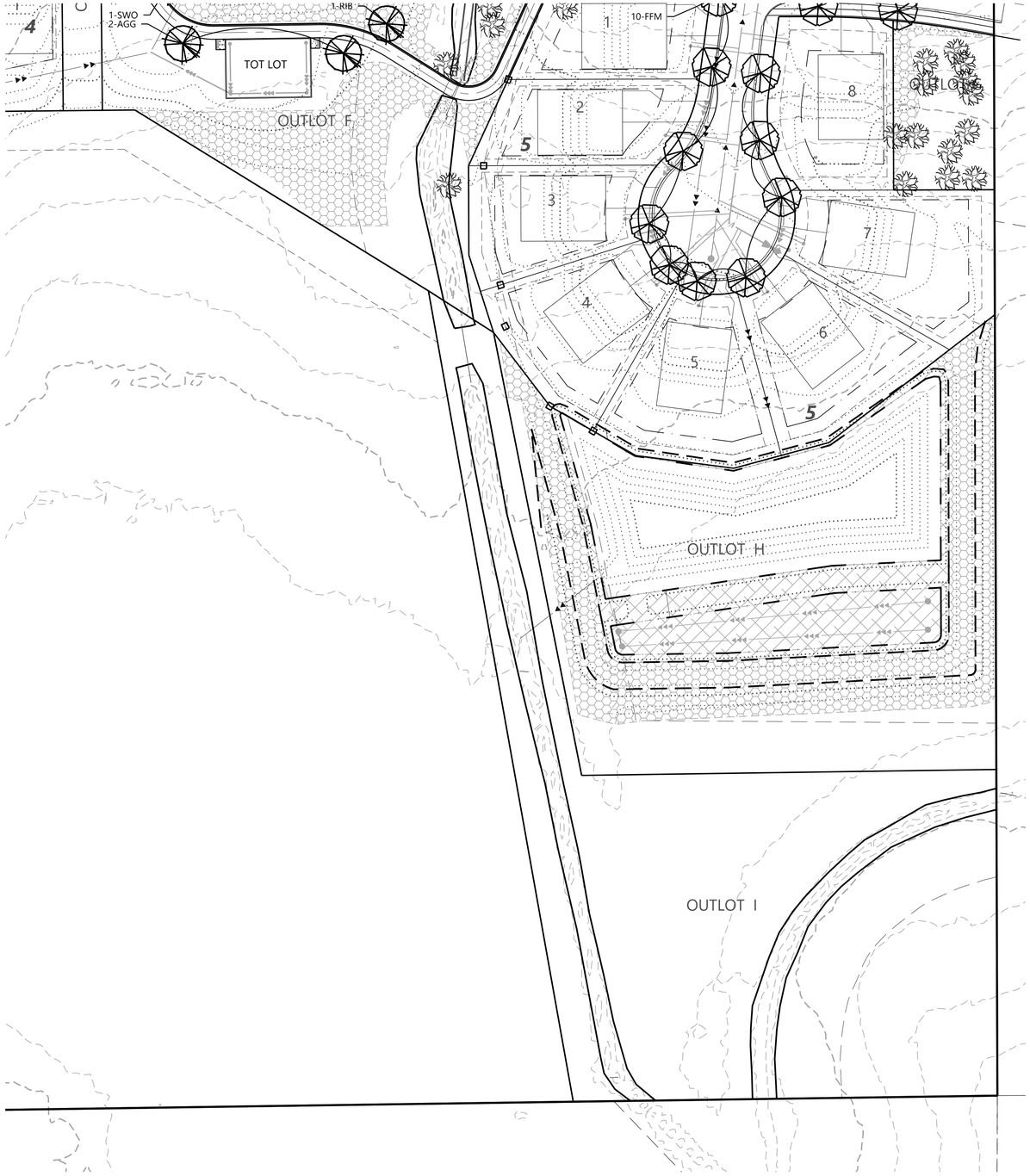

PLANTING NOTES

1. CONTRACTOR SHALL CONTACT COMMON GROUND ALLIANCE AT 811 OR CALL811.COM TO VERIFY LOCATIONS OF ALL UNDERGROUND UTILITIES PRIOR TO INSTALLATION OF ANY PLANTS OR LANDSCAPE MATERIAL.
2. ACTUAL LOCATION OF PLANT MATERIAL IS SUBJECT TO FIELD AND SITE CONDITIONS.
3. NO PLANTING WILL BE INSTALLED UNTIL ALL GRADING AND CONSTRUCTION HAS BEEN COMPLETED IN THE IMMEDIATE AREA.
4. ALL SUBSTITUTIONS MUST BE APPROVED BY THE LANDSCAPE ARCHITECT PRIOR TO SUBMISSION OF ANY BID AND/OR QUOTE BY THE LANDSCAPE CONTRACTOR.
5. CONTRACTOR SHALL PROVIDE TWO YEAR GUARANTEE OF ALL PLANT MATERIALS. THE GUARANTEE BEGINS ON THE DATE OF THE LANDSCAPE ARCHITECT'S OR OWNER'S WRITTEN ACCEPTANCE OF THE INITIAL PLANTING. REPLACEMENT PLANT MATERIAL SHALL HAVE A ONE YEAR GUARANTEE COMMENCING UPON PLANTING.
6. ALL PLANTS TO BE SPECIMEN GRADE, MINNESOTA-GROWN AND/OR HARDY. SPECIMEN GRADE SHALL ADHERE TO, BUT IS NOT LIMITED BY, THE FOLLOWING STANDARDS:
   ALL PLANTS SHALL BE FREE FROM DISEASE, PESTS, WOUNDS, SCARS, ETC.
   ALL PLANTS SHALL BE FREE FROM NOTICEABLE GAPS, HOLES, OR DEFORMITIES.
   ALL PLANTS SHALL BE FREE FROM BROKEN OR DEAD BRANCHES.
   ALL PLANTS SHALL HAVE HEAVY, HEALTHY BRANCHING AND LEAFING.
   CONIFEROUS TREES SHALL HAVE AN ESTABLISHED MAIN LEADER AND A HEIGHT TO WIDTH RATIO OF NO LESS THAN 5:3.
7. PLANTS TO MEET AMERICAN STANDARD FOR NURSERY STOCK (ANSI Z60.1-2014 OR MOST CURRENT VERSION) REQUIREMENTS FOR SIZE AND TYPE SPECIFIED.
8. PLANTS TO BE INSTALLED AS PER MNLA & ANSI STANDARD PLANTING PRACTICES.
9. PLANTS SHALL BE IMMEDIATELY PLANTED UPON ARRIVAL AT SITE. PROPERLY HEEL-IN MATERIALS IF NECESSARY; TEMPORARY ONLY.
10. PRIOR TO PLANTING, FIELD VERIFY THAT THE ROOT COLLAR/ROOT FLAIR IS LOCATED AT THE TOP OF THE BALLED & BURLAP TREE. IF THIS IS NOT THE CASE, SOIL SHALL BE REMOVED DOWN TO THE ROOT COLLAR/ROOT FLAIR. WHEN THE BALLED & BURLAP TREE IS PLANTED, THE ROOT COLLAR/ROOT FLAIR SHALL BE EVEN OR SLIGHTLY ABOVE FINISHED GRADE.
11. OPEN TOP OF BURLAP ON BB MATERIALS; REMOVE POT ON POTTED PLANTS; SPLIT AND BREAK APART PEAT POTS.
12. PRUNE PLANTS AS NECESSARY - PER STANDARD NURSERY PRACTICE AND TO CORRECT POOR BRANCHING OF EXISTING AND PROPOSED TREES.
13. WRAP ALL SMOOTH-BARKED TREES - FASTEN TOP AND BOTTOM. REMOVE BY APRIL 1ST.
14. STAKING OF TREES AS REQUIRED; REPOSITION, PLUMB AND STAKE IF NOT PLUMB AFTER ONE YEAR.
15. THE NEED FOR SOIL AMENDMENTS SHALL BE DETERMINED UPON SITE SOIL CONDITIONS PRIOR TO PLANTING. LANDSCAPE CONTRACTOR SHALL NOTIFY LANDSCAPE ARCHITECT FOR THE NEED OF ANY SOIL AMENDMENTS.
16. BACKFILL SOIL AND TOPSOIL TO ADHERE TO MN/DOT STANDARD SPECIFICATION 3877 (SELECT TOPSOIL BORROW) AND TO BE EXISTING TOP SOIL FROM SITE FREE OF ROOTS, ROCKS LARGER THAN ONE INCH, SUBSOIL DEBRIS, AND LARGE WEEDS UNLESS SPECIFIED OTHERWISE. MINIMUM 4" DEPTH TOPSOIL FOR ALL LAWN GRASS AREAS AND 12" DEPTH TOPSOIL FOR TREE, SHRUBS, AND PERENNIALS.
17. MULCH TO BE AT ALL TREE, SHRUB, PERENNIAL, AND MAINTENANCE AREAS. TREE AND SHRUB PLANTING BEDS SHALL HAVE 4" DEPTH OF SHREDDED HARDWOOD MULCH. SHREDDED HARDWOOD MULCH TO BE USED AROUND ALL PLANTS WITHIN TURF AREAS. PERENNIAL AND ORNAMENTAL GRASS BEDS SHALL HAVE 2" DEPTH SHREDDED HARDWOOD MULCH. MULCH TO BE FREE OF DELETERIOUS MATERIAL AND COLORED RED, OR APPROVED EQUAL. ROCK MULCH TO BE BUFF LIMESTONE, 1 1/2" TO 3" DIAMETER, AT MINIMUM 3" DEPTH, OR APPROVED EQUAL. ROCK MULCH TO BE ON COMMERCIAL GRADE FILTER FABRIC, BY TYPAR, OR APPROVED EQUAL WITH NO EXPOSURE. MULCH AND FABRIC TO BE APPROVED BY OWNER PRIOR TO INSTALLATION. MULCH TO MATCH EXISTING CONDITIONS (WHERE APPLICABLE).
18. EDGING TO BE COMMERCIAL GRADE VALLEY-VIEW BLACK DIAMOND (OR EQUAL) POLY EDGING OR SPADED EDGE, AS INDICATED. POLY EDGING SHALL BE PLACED WITH SMOOTH CURVES AND STAKED WITH METAL SPIKES NO GREATER THAN 4 FOOT ON CENTER WITH BASE OF TOP BEAD AT GRADE, FOR MOWERS TO CUT ABOVE WITHOUT DAMAGE. UTILIZE CURBS AND SIDEWALKS FOR EDGING WHERE POSSIBLE. SPADED EDGE TO PROVIDE V-SHAPED DEPTH AND WIDTH TO CREATE SEPARATION BETWEEN MULCH AND GRASS. INDIVIDUAL TREE, SHRUB, OR RAIN-GARDEN BEDS TO BE SPADED EDGE, UNLESS NOTED OTHERWISE. EDGING TO MATCH EXISTING CONDITIONS (WHERE APPLICABLE).
19. ALL DISTURBED AREAS TO BE SODDED OR SEEDED, UNLESS OTHERWISE NOTED. PARKING LOT ISLANDS TO BE SODDED WITH SHREDDED HARDWOOD MULCH AROUND ALL TREES AND SHRUBS. SOD TO BE STANDARD MINNESOTA GROWN AND HARDY BLUEGRASS MIX, FREE OF LAWN WEEDS. ALL TOPSOIL AREAS TO BE RAKED TO REMOVE DEBRIS AND ENSURE DRAINAGE. SLOPES OF 3:1 OR GREATER SHALL BE STAKED. SEED AS SPECIFIED AND PER MN/DOT SPECIFICATIONS. IF NOT INDICATED ON LANDSCAPE PLAN, SEE EROSION CONTROL PLAN.
20. PROVIDE IRRIGATION TO ALL PLANTED AREAS ON SITE. IRRIGATION SYSTEM TO BE DESIGN/BUILD BY LANDSCAPE CONTRACTOR. LANDSCAPE CONTRACTOR TO PROVIDE SHOP DRAWINGS TO LANDSCAPE ARCHITECT FOR APPROVAL PRIOR TO INSTALLATION OF IRRIGATION SYSTEM. CONTRACTOR TO PROVIDE OPERATION MANUALS, AS-BUILT PLANS, AND NORMAL PROGRAMMING. SYSTEM SHALL BE WINTERIZED AND HAVE SPRING STARTUP DURING FIRST YEAR OF OPERATION. SYSTEM SHALL HAVE ONE-YEAR WARRANTY ON ALL PARTS AND LABOR. ALL INFORMATION ABOUT INSTALLATION AND SCHEDULING CAN BE OBTAINED FROM THE GENERAL CONTRACTOR.
21. CONTRACTOR SHALL PROVIDE NECESSARY WATERING OF PLANT MATERIALS UNTIL THE PLANT IS FULLY ESTABLISHED OR IRRIGATION SYSTEM IS OPERATIONAL. OWNER WILL NOT PROVIDE WATER FOR CONTRACTOR.
22. REPAIR, REPLACE, OR PROVIDE SOD/SEED AS REQUIRED FOR ANY ROADWAY BOULEVARD AREAS ADJACENT TO THE SITE DISTURBED DURING CONSTRUCTION.
23. REPAIR ALL DAMAGE TO PROPERTY FROM PLANTING OPERATIONS AT NO COST TO OWNER.
24. RAIN GARDEN NOTE: PROVIDE AND INSTALL EROSION CONTROL BLANKET AT RAIN GARDEN AREA SIDE SLOPES AFTER ALL PLANTING HAVE BEEN INSTALLED. BLANKET TO BE ONE SEASON GEOJUTE, MN/DOT CATEGORY 2 (STRAW 1S, WOOD FIBER 1S), OR APPROVED EQUAL. BLANKET TO BE OVERLAPPED BY 4" AND ANCHORED BY SOD STAPLES. PLACE BLANKET PERPENDICULAR TO THE SLOPE. TRENCH IN EDGES OF BLANKET AREA TO PREVENT UNDER MINING. PROVIDE SILT FENCE AT TOP OF SLOPE AS NEEDED. SHREDDED HARDWOOD MULCH TO MATCH OTHER PROJECT PLANTING MULCH. PLACE 4" DEPTH OF MULCH AT ALL PLANTING AND EROSION CONTROL BLANKET AREA (NO FILTER FABRIC). SEE RAIN GARDEN DETAIL FOR FURTHER INFORMATION. RAIN GARDEN TO PROVIDE PROPER INFILTRATION AND DRAINAGE REQUIREMENTS PER ENGINEERS APPROVAL.

PLANTING DETAILS

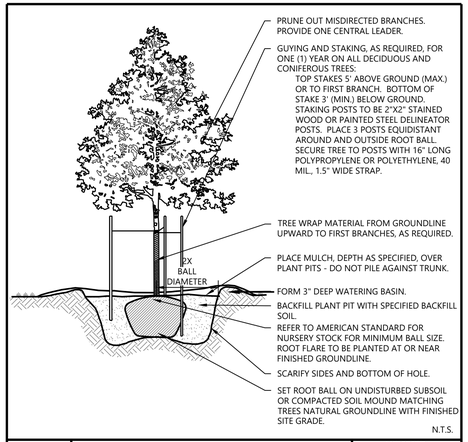

Westwood	DECIDUOUS TREE PLANTING	LAST REVISED: 10/19/18 LA28

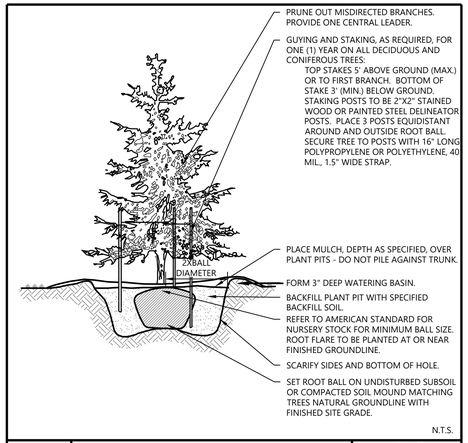

Westwood	EVERGREEN TREE PLANTING	LAST REVISED: 10/19/18 LA29

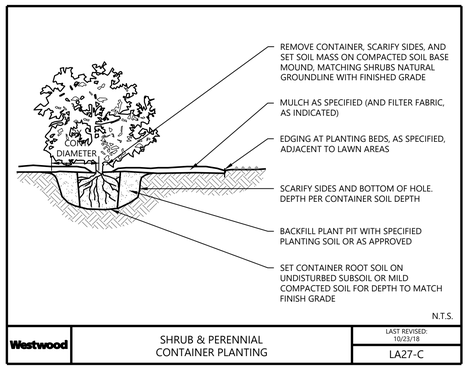

Westwood	SHRUB & PERENNIAL CONTAINER PLANTING	LAST REVISED: 10/23/18 LA27-C

Call 48 Hours before digging:
811 or call811.com
Common Ground Alliance

1" = 50'
0' 50' 100' 150'

CONSTRUCTION PLANS

OAK CREEK

N:\0024429.00\DWG\CIVIL\FINAL\LANDSCAPE\0024429L-PL101.DWG

DESIGNED: .
CHECKED: .
DRAWN: .
HORIZONTAL SCALE: ##########
VERTICAL SCALE: ### OR ###

INITIAL ISSUE: 05/02/22
REVISIONS:
1 05/24/22 CITY COMMENTS
2 06/21/22 WATERSHED COMMENTS
3 . .
4 . .
5 . .

PREPARED FOR:
DR HORTON, INC. - MINNESOTA
20860 KENBRIDGE COURT, SUITE 100
LAKEVILLE, MINNESOTA 55044

I HEREBY CERTIFY THAT THIS PLAN WAS PREPARED BY ME OR UNDER MY DIRECT SUPERVISION AND THAT I AM A DULY LICENSED LANDSCAPE ARCHITECT UNDER THE LAWS OF THE STATE OF MINNESOTA
NICHOLAS T. MEYER
DATE: 06/22/22 LICENSE NO. 53774

OAK CREEK
CHASKA, MINNESOTA

Westwood
Phone (952) 937-5150 12701 Whitewater Drive, Suite #300
Fax (952) 937-5822 Minnetonka, MN 55343
Toll Free (888) 937-5150 westwoodps.com
Westwood Professional Services, Inc.

LANDSCAPE PLAN - NOTES - DETAILS

PROJECT NUMBER: 0024429.00

SHEET NUMBER: 6 OF 7
DATE: 06/22/22

© 2022 Westwood Professional Services, Inc.

Call 48 Hours before digging:
811 or call811.com
Common Ground Alliance

TOT LOT & BENCHES PLAN

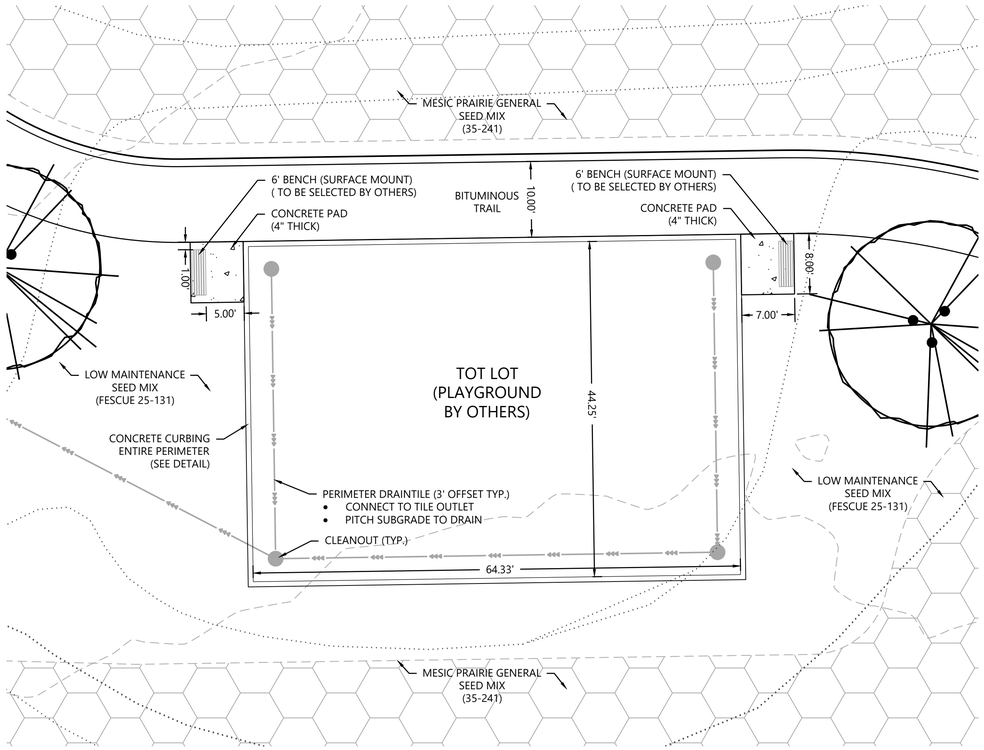

MONUMENT SIGN PLANTING PLAN

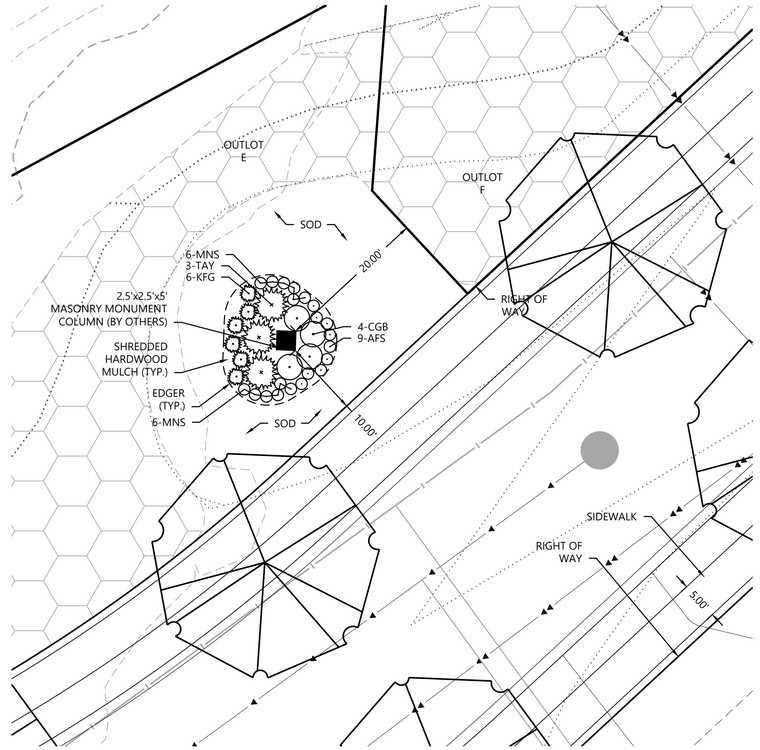

MONUMENT SIGN PLANT SCHEDULE

CODE	QTY.	COMMON/BOTANICAL NAME	SIZE	SPACING O.C.
EVERGREEN SHRUBS	3			
TAY	3	Taunton Yew / Taxus medii 'Taunton'	#5 CONT.	4' O.C.
DECIDUOUS SHRUBS	4			
CGB	4	Chicagoland Green Boxwood / Buxus 'Glencoe'	#5 CONT.	3' O.C.
PERENNIALS	27			
MNS	12	May Night Salvia / Salvia x nemorosa 'May Night'	#1 CONT.	18" O.C.
AFS	9	Autumn Fire Sedum / Sedum x 'Autumn Fire'	#1 CONT.	18" O.C.
KFG	6	Karl Foerster Grass / Calamagrostis x acutiflora 'Karl Foerster'	#1 CONT.	24" O.C.

NOTES: QUANTITIES ON PLAN SUPERSEDE LIST QUANTITIES IN THE EVENT OF A DISCREPANCY.
REFER TO FINAL LANDSCAPE PLANS FOR SPECIES LOCATIONS AND QUANTITIES.

TOT LOT CURB & DRAINAGE DETAILS

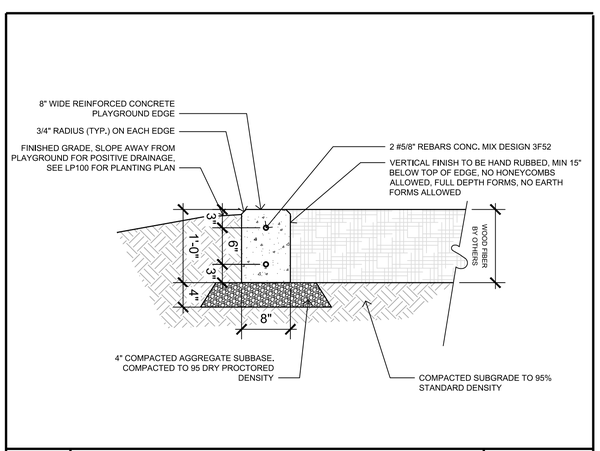

PLAYGROUND CURB — LAST REVISED: 08/11/21

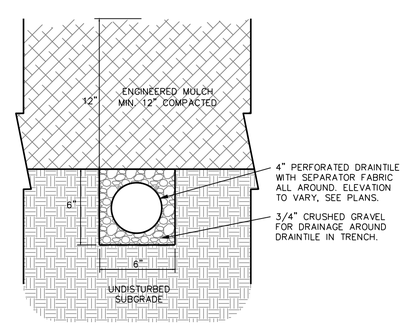

Westwood — TOT LOT DRAINTILE — LAST REVISED: 09/26/18 — LA33

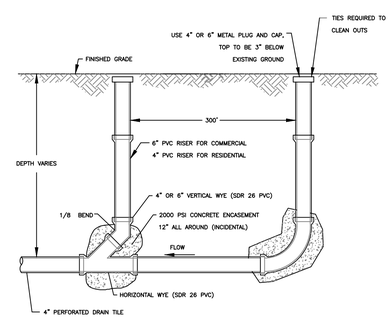

CLEAN OUT STRUCTURE — LAST REVISED: 08/11/21

1" = 10'
0' 10' 20' 30'

CONSTRUCTION PLANS

OAK CREEK

N:\0024429.00\DWG\CIVIL\FINAL\LANDSCAPE\0024429L-PLF01.DWG

DESIGNED: .
CHECKED: .
DRAWN: .
HORIZONTAL SCALE: ###########
VERTICAL SCALE: ### OR ###

INITIAL ISSUE: 05/02/22
REVISIONS:
1 05/24/22 CITY COMMENTS
2 06/21/22 WATERSHED COMMENTS
3 . .
4 . .
5 . .

PREPARED FOR:

DR HORTON, INC. - MINNESOTA
20860 KENBRIDGE COURT, SUITE 100
LAKEVILLE, MINNESOTA 55044

I HEREBY CERTIFY THAT THIS PLAN WAS PREPARED BY ME OR UNDER MY DIRECT SUPERVISION AND THAT I AM A DULY LICENSED LANDSCAPE ARCHITECT UNDER THE LAWS OF THE STATE OF MINNESOTA
NICHOLAS T. MEYER
DATE: 06/22/22 LICENSE NO. 53774

OAK CREEK
CHASKA, MINNESOTA

Westwood
Phone (952) 937-5150 12701 Whitewater Drive, Suite #300
Fax (952) 937-5822 Minnetonka, MN 55343
Toll Free (888) 937-5150 westwoodps.com
Westwood Professional Services, Inc.

LANDSCAPE DETAILS

PROJECT NUMBER: 0024429.00

SHEET NUMBER: 7 OF 7
DATE: 06/22/22

© 2022 Westwood Professional Services, Inc.

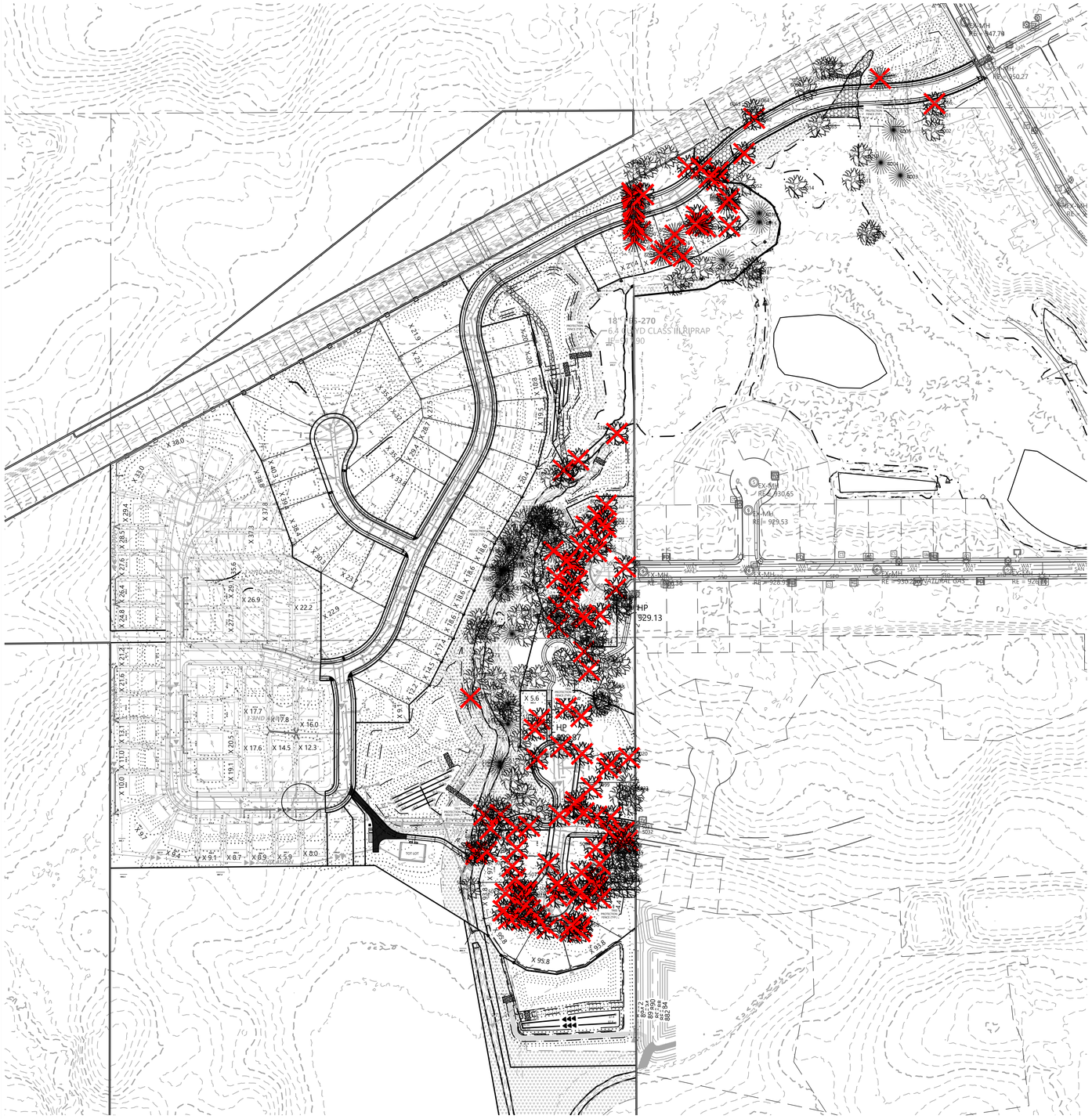

Call 48 Hours before digging:
811 or call811.com
Common Ground Alliance

TREE INVENTORY REGULATIONS

SIGNIFICANT TREES:
- DECIDUOUS HARDWOOD TREES - 12" DBH OR LARGER
- CONIFEROUS TREES - 15' HT. OR LARGER
- CONIFEROUS TREES CONVERSION RATE: 1' HT. = 2.4" DBH 15' HT. = 7" DBH

TREE INVENTORY CALCULATIONS

Tree Inventory Calculations	
Total Healthy Caliper Inches Onsite	4,610 DBH In.
Total Healthy Trees Onsite	216 Trees
Total Healthy Caliper Inches Saved	2,468 DBH In.
Total Healthy Trees Saved	106 Trees
Total Healthy Caliper Inches Remove	2,142 DBH In.
Total Healthy Trees Removed	110 Trees

LEGEND

- EXISTING DECIDUOUS TREE TO REMAIN
- EXISTING DECIDUOUS TREE TO BE REMOVED
- EXISTING CONIFEROUS TREE TO REMAIN
- EXISTING CONIFEROUS TREE TO BE REMOVED

TREE PROTECTION DETAIL

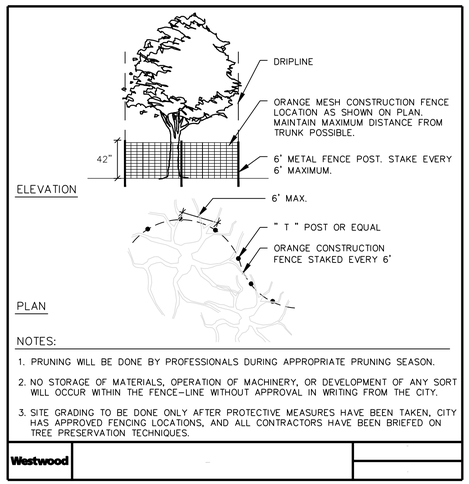

NOTES:
1. PRUNING WILL BE DONE BY PROFESSIONALS DURING APPROPRIATE PRUNING SEASON.
2. NO STORAGE OF MATERIALS, OPERATION OF MACHINERY, OR DEVELOPMENT OF ANY SORT WILL OCCUR WITHIN THE FENCE-LINE WITHOUT APPROVAL IN WRITING FROM THE CITY.
3. SITE GRADING TO BE DONE ONLY AFTER PROTECTIVE MEASURES HAVE BEEN TAKEN, CITY HAS APPROVED FENCING LOCATIONS, AND ALL CONTRACTORS HAVE BEEN BRIEFED ON TREE PRESERVATION TECHNIQUES.

Westwood

CONTRACTOR: DOBOSZENSKI AND SONS
RECORD DRAWING: GRADING
CONFORMING TO CONSTRUCTION RECORDS.
BY Ben Passolt DATE 12/15/22
WESTWOOD PROFESSIONAL SERVICES

1" = 150'
0' 150' 300' 450'

N:\0024429.00\DWG\CIVIL\FINAL\FINAL GRADING\0024429S-TPP01.DWG

OAK CREEK

DESIGNED:	FDH II
CHECKED:	FDH II
DRAWN:	FDH III
HORIZONTAL SCALE:	150'
VERTICAL SCALE:	30' OR 15'

INITIAL ISSUE: 04/22/2022
REVISIONS:

05/24/22	CITY COMMENTS	08/01/22	WATERSHED COMMENTS
06/21/22	WATERSHED COMMENTS	08/04/22	TRAIL GRADE REV
06/28/22	OAK CREEK DRIVE GRADE & PAD L1-2; B3	08/09/22	CITY REVIEW COMMENTS
07/22/22	CCWMO REVIEW COMMENTS	08/25/22	REV HOUSE STYLE L5,B1
07/26/22	CITY COMMENTS	12/15/22	RECORD PLAN
		09/19/22	CITY COMMENTS
		08/29/22	CCWMO REVIEW COMMENTS

PREPARED FOR:

DR HORTON, INC. - MINNESOTA
20860 KENBRIDGE COURT, SUITE 100
LAKEVILLE, MINNESOTA 55044

I HEREBY CERTIFY THAT THIS PLAN WAS PREPARED BY ME OR UNDER MY DIRECT SUPERVISION AND THAT I AM A DULY LICENSED LANDSCAPE ARCHITECT UNDER THE LAWS OF THE STATE OF MINNESOTA

Nicholas Meyer

DATE: 09/19/22 LICENSE NO. 53774

OAK CREEK
CHASKA, MN

Westwood
Phone (952) 937-5150 12701 Whitewater Drive, Suite #300
Fax (952) 937-5822 Minnetonka, MN 55343
Toll Free (888) 937-5150 westwoodps.com
Westwood Professional Services, Inc.

OVERALL TREE PRESERVATION PLAN

PROJECT NUMBER: 0024429.00

SHEET NUMBER: 15 OF 20

DATE: 09/19/22

© 2022 Westwood Professional Services, Inc.

Call 48 Hours before digging:
811 or call811.com
Common Ground Alliance

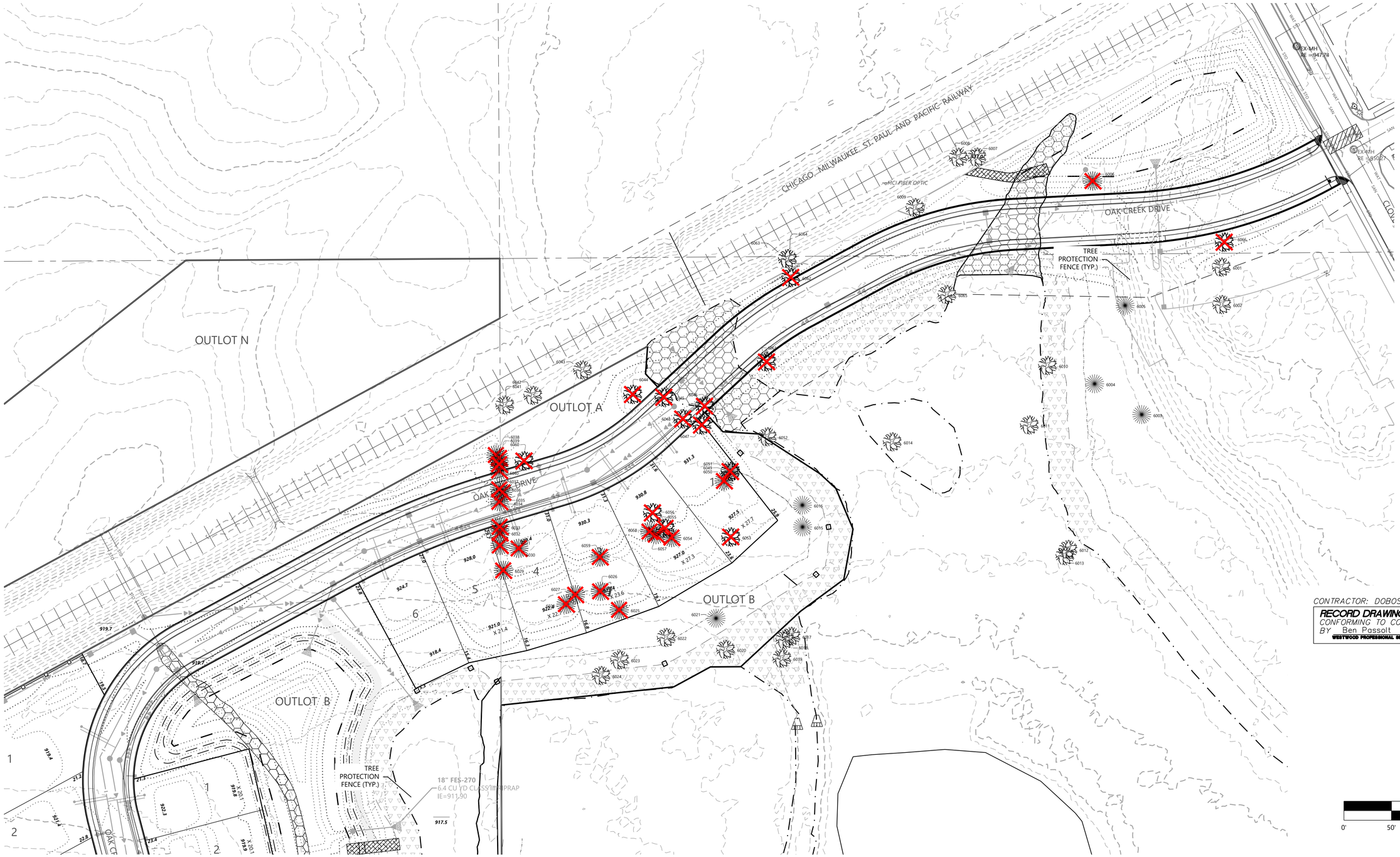

N:\0024429.00\DWG\CIVIL\FINAL\FINAL GRADING\0024429S-TPP01.DWG

OAK CREEK

DESIGNED:	FDH II
CHECKED:	FDH II
DRAWN:	FDH III
HORIZONTAL SCALE:	50'
VERTICAL SCALE:	10' OR 5'

INITIAL ISSUE: 04/22/2022

REVISIONS:

05/24/22	CITY COMMENTS	08/01/22	WATERSHED COMMENTS
06/21/22	WATERSHED COMMENTS	08/04/22	TRAIL GRADE REV
06/28/22	OAK CREEK DRIVE GRADE & PAD L1-2; B3	08/09/22	CITY REVIEW COMMENTS
07/22/22	CCWMO REVIEW COMMENTS	08/25/22	REV HOUSE STYLE L5,B1
07/26/22	CITY COMMENTS	12/15/22	RECORD PLAN
		09/19/22	CITY COMMENTS
		08/29/22	CCWMO REVIEW COMMENTS

PREPARED FOR:

DR HORTON, INC. - MINNESOTA

20860 KENBRIDGE COURT, SUITE 100
LAKEVILLE, MINNESOTA 55044

I HEREBY CERTIFY THAT THIS PLAN WAS PREPARED BY ME OR UNDER MY DIRECT SUPERVISION AND THAT I AM A DULY LICENSED LANDSCAPE ARCHITECT UNDER THE LAWS OF THE STATE OF MINNESOTA

Nicholas Mayo

DATE: 09/19/22 LICENSE NO. 53774

OAK CREEK

CHASKA, MN

Westwood

Phone (952) 937-5150
Fax (952) 937-5822
Toll Free (888) 937-5150

12701 Whitewater Drive, Suite #300
Minnetonka, MN 55343
westwoodps.com

Westwood Professional Services, Inc.

TREE PRESERVATION PLAN

PROJECT NUMBER: 0024429.00

SHEET NUMBER: 16 OF 20

DATE: 09/19/22

© 2022 Westwood Professional Services, Inc.

N:\0024429.00\DWG\CIVIL\FINAL\FINAL GRADING\0024429S-TPP01.DWG

Call 48 Hours before digging:
811 or call811.com
Common Ground Alliance

CONTRACTOR: DOBOSZENSKI AND SONS

RECORD DRAWING: GRADING
CONFORMING TO CONSTRUCTION RECORDS.
BY Ben Passolt DATE 12/15/22
WESTWOOD PROFESSIONAL SERVICES

OAK CREEK

DESIGNED:	FDH II
CHECKED:	FDH II
DRAWN:	FDH III
HORIZONTAL SCALE:	50.000005'
VERTICAL SCALE:	10' OR 5'

INITIAL ISSUE: 04/22/2022
REVISIONS:

05/24/22	CITY COMMENTS	08/01/22	WATERSHED COMMENTS
06/21/22	WATERSHED COMMENTS	08/04/22	TRAIL GRADE REV
06/28/22	OAK CREEK DRIVE GRADE & PAD L1-2; B3	08/09/22	CITY REVIEW COMMENTS
07/22/22	CCWMO REVIEW COMMENTS	08/25/22	REV HOUSE STYLE L5,B1
07/26/22	CITY COMMENTS	12/15/22	RECORD PLAN
		09/19/22	CITY COMMENTS
		08/29/22	CCWMO REVIEW COMMENTS

PREPARED FOR:

DR HORTON, INC. - MINNESOTA
20860 KENBRIDGE COURT, SUITE 100
LAKEVILLE, MINNESOTA 55044

I HEREBY CERTIFY THAT THIS PLAN WAS PREPARED BY ME OR UNDER MY DIRECT SUPERVISION AND THAT I AM A DULY LICENSED LANDSCAPE ARCHITECT UNDER THE LAWS OF THE STATE OF MINNESOTA

Nicholas May

DATE: 09/19/22 LICENSE NO. 53774

OAK CREEK
CHASKA, MN

Westwood
Phone (952) 937-5150 12701 Whitewater Drive, Suite #300
Fax (952) 937-5822 Minnetonka, MN 55343
Toll Free (888) 937-5150 westwoodps.com
Westwood Professional Services, Inc.

TREE PRESERVATION PLAN

PROJECT NUMBER: 0024429.00

SHEET NUMBER: 17 OF 20

DATE: 09/19/22

© 2022 Westwood Professional Services, Inc.

Call 48 Hours before digging:
811 or call811.com
Common Ground Alliance

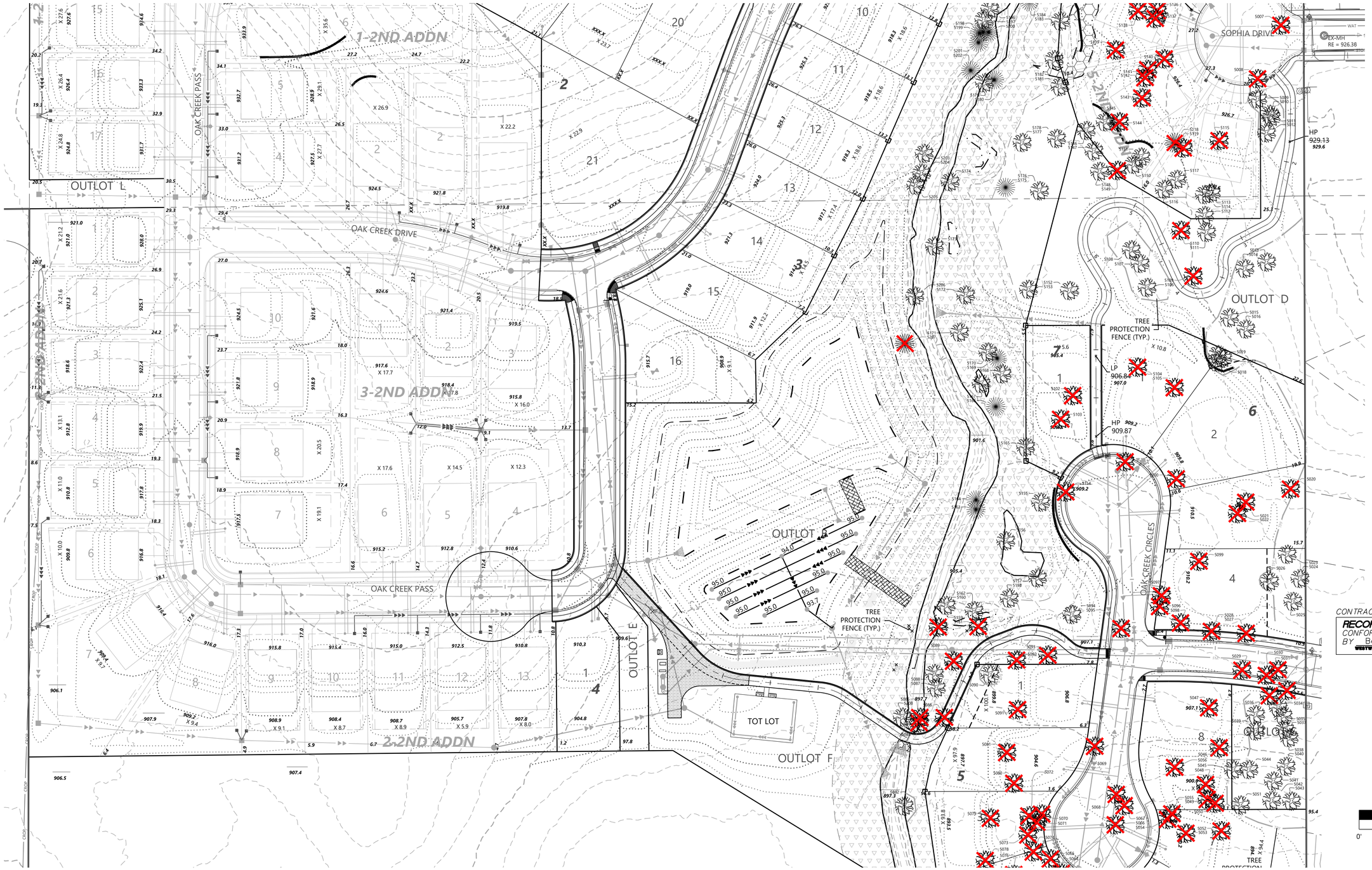

CONTRACTOR: DOBOSZENSKI AND SONS

RECORD DRAWING: GRADING
CONFORMING TO CONSTRUCTION RECORDS.
BY Ben Passolt DATE 12/15/22
WESTWOOD PROFESSIONAL SERVICES

1" = 50'
0' 50' 100' 150'

N:\0024429.00\DWG\CIVIL\FINAL\FINAL GRADING\0024429S-TPP01.DWG

OAK CREEK

DESIGNED:	FDH II
CHECKED:	FDH II
DRAWN:	FDH III
HORIZONTAL SCALE:	50'
VERTICAL SCALE:	10' OR 5'

INITIAL ISSUE: 04/22/2022
REVISIONS:

1	05/24/22	CITY COMMENTS	08/01/22 WATERSHED COMMENTS
2	06/21/22	WATERSHED COMMENTS	08/04/22 TRAIL GRADE REV
3	06/28/22	OAK CREEK DRIVE GRADE & PAD L1-2; B3	08/09/22 CITY REVIEW COMMENTS
4	07/22/22	CCWMO REVIEW COMMENTS	08/25/22 REV HOUSE STYLE L5,B1
5	07/26/22	CITY COMMENTS	12/15/22 RECORD PLAN
6			08/29/22 CCWMO REVIEW COMMENTS
7			09/19/22 CITY COMMENTS

PREPARED FOR:

DR HORTON, INC. - MINNESOTA
20860 KENBRIDGE COURT, SUITE 100
LAKEVILLE, MINNESOTA 55044

I HEREBY CERTIFY THAT THIS PLAN WAS PREPARED BY ME OR UNDER MY DIRECT SUPERVISION AND THAT I AM A DULY LICENSED LANDSCAPE ARCHITECT UNDER THE LAWS OF THE STATE OF MINNESOTA

Nicholas Meyer

DATE: 09/19/22 LICENSE NO. 53774

OAK CREEK
CHASKA, MN

Westwood
Phone (952) 937-5150 12701 Whitewater Drive, Suite #300
Fax (952) 937-5822 Minnetonka, MN 55343
Toll Free (888) 937-5150 westwoodps.com
Westwood Professional Services, Inc.

TREE PRESERVATION PLAN

PROJECT NUMBER: 0024429.00

SHEET NUMBER: 18 OF 20

DATE: 09/19/22

© 2022 Westwood Professional Services, Inc.

Call 48 Hours before digging:
811 or call811.com
Common Ground Alliance

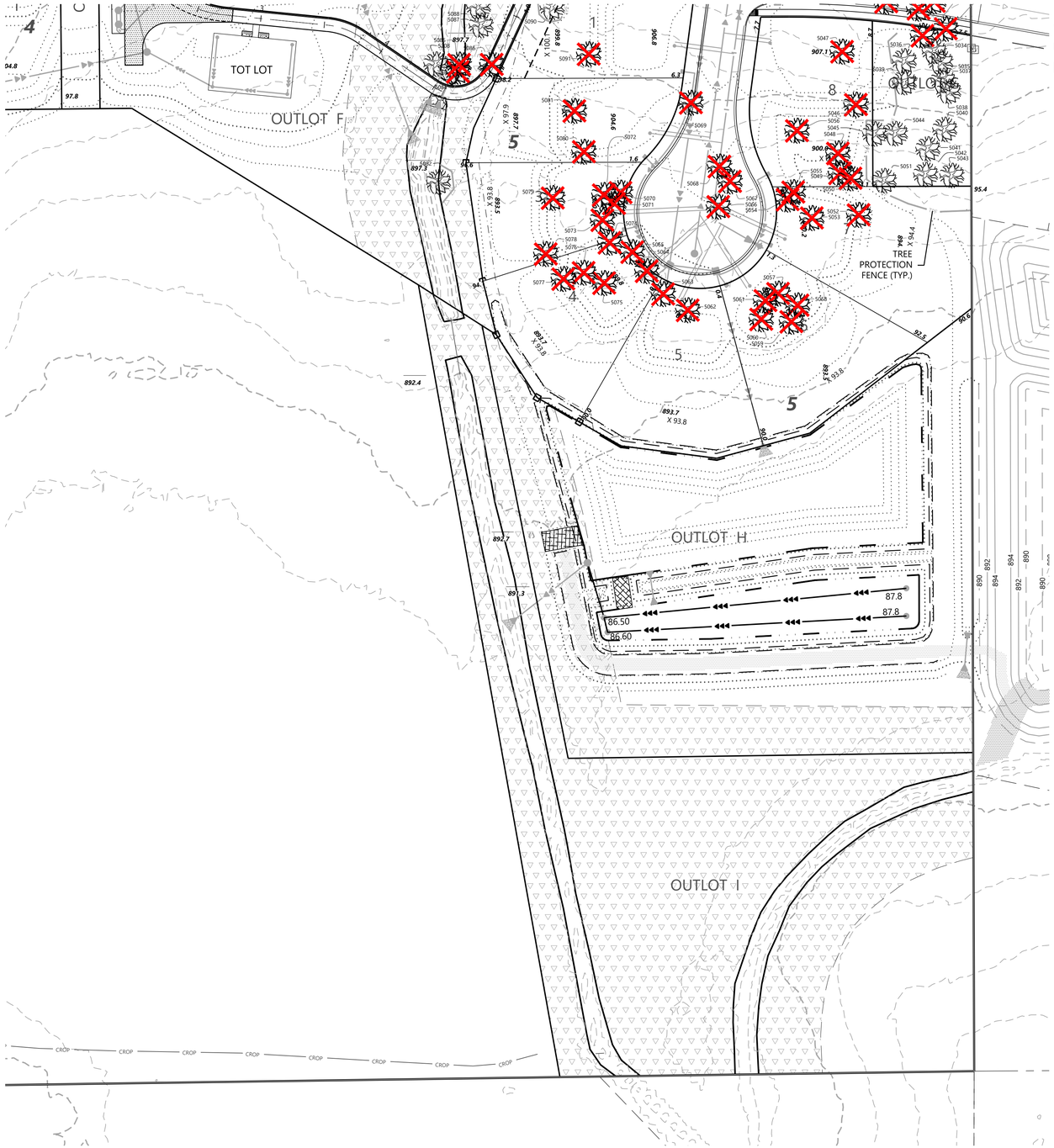

TREE PRESERVATION DATA

TREE TAG	SPECIES	SIZE (DBH)	NOTES	STATUS
5001	Red Oak	37	BD-35%	Removed-Exempt-Unhealthy
5002	Bur Oak	43		Removed
5003	Bur Oak	24		Removed
5004	Bur Oak	24		Removed
5005	Bur Oak	29		Removed
5006	Bur Oak	23		Removed
5007	Ash	43	EAB	Removed-Exempt-Unhealthy
5008	Sugar Maple	38		Removed
5009	Red Oak	26		Saved 1)
5010	Bur Oak	20	X	Saved
5011	Bur Oak	25		Saved
5012	Bur Oak	26		Saved
5013	Bur Oak	25		Saved
5014	Bur Oak	41		Saved
5015	Bur Oak	29		Saved
5016	Bur Oak	59		Saved
5017	American Elm	12		Saved
5018	American Elm	14		Saved
5019	Bur Oak	29		Saved
5020	Red Oak	39	BD-20%, Dead	Removed-Exempt-Unhealthy 1)
5021	Bur Oak	13		Removed
5022	Bur Oak	28		Removed
5023	Bur Oak	31		Saved
5024	Bur Oak	28		Saved
5025	Red Oak	37		Saved
5026	Bur Oak	22		Saved 1)
5027	Bur Oak	26		Removed
5028	Bur Oak	29		Removed
5029	Bur Oak	35		Removed
5030	Bur Oak	20		Removed
5031	Bur Oak	13		Removed
5032	Bur Oak	18		Removed
5033	Bur Oak	20		Removed
5034	Bur Oak	34		Saved
5035	Bur Oak	21		Saved
5036	Bur Oak	15		Saved
5037	Bur Oak	28		Saved
5038	Bur Oak	24		Saved
5039	Bur Oak	28	BD-10%	Saved
5040	Bur Oak	28		Saved
5041	Bur Oak	25		Saved
5042	Bur Oak	20		Saved
5043	Bur Oak	45		Saved
5044	Bur Oak	19		Saved
5045	Bur Oak	39		Saved 1)
5046	Bur Oak	32		Removed
5047	Bur Oak	24		Removed
5048	Bur Oak	18		Removed
5049	Bur Oak	18		Removed
5050	Bur Oak	19		Removed
5051	Bur Oak	23		Saved
5052	Bur Oak	32		Removed
5053	Bur Oak	32		Removed
5054	Bur Oak	23		Removed
5055	American Elm	12		Removed
5056	Bur Oak	28		Removed
5057	Bur Oak	26		Removed
5058	Fruit Tree	19		Removed
5059	Bur Oak	31		Removed
5060	Bur Oak	19		Removed
5061	Bur Oak	19		Removed
5062	Basswood	18		Removed
5063	Bur Oak	30		Removed
5064	Bur Oak	27		Removed
5065	Bur Oak	17		Removed
5066	Bur Oak	34		Removed
5067	Bur Oak	20		Removed
5068	Bur Oak	25		Removed
5069	Basswood	34		Removed
5070	Bur Oak	25		Removed
5071	Bur Oak	17	BD-15%	Removed
5072	Bur Oak	16		Removed
5073	Bur Oak	24		Removed
5074	Bur Oak	16		Removed
5075	Bur Oak	16		Removed
5076	Bur Oak	30		Removed
5077	Bur Oak	26		Removed
5078	Basswood	35	X BD, Dead	Removed-Exempt-Unhealthy
5079	Bur Oak	26		Removed
5080	Bur Oak	24		Removed
5081	Bur Oak	30		Removed
5082	Siberian Elm	17	Invasive	Saved-Exempt-Invasive
5084	Siberian Elm	12	Invasive	Removed-Exempt-Invasive 1)
5085	Bur Oak	29		Removed-Exempt-Unhealthy 1)
5086	Bur Oak	19		Removed
5087	Basswood	29	BD, Dead	Saved-Exempt-Unhealthy
5088	Bur Oak	25		Saved
5089	Bur Oak	24		Removed
5090	Bur Oak	28		Saved 1)
5091	Bur Oak	28		Removed
5092	Bur Oak	34		Removed
5093	Bur Oak	22		Removed
5094	Bur Oak	22		Saved
5095	Bur Oak	32		Removed
5096	Bur Oak	23		Removed
5097	Bur Oak	30		Removed
5098	Bur Oak	29		Removed
5099	Bur Oak	24		Removed
5100	Bur Oak	29		Removed
5101	Bur Oak	28		Removed
5102	Basswood	41	PD, Dead	Removed-Exempt-Unhealthy
5103	Bur Oak	35		Removed
5104	Bur Oak	21		Removed
5105	Red Oak	36	BD-40%	Removed-Exempt-Unhealthy
5106	Bur Oak	28		Saved
5107	Red Oak	24		Saved
5108	Bur Oak	28		Saved
5109	Red Oak	42	BD-60%	Removed-Exempt-Unhealthy 1)
5110	Bur Oak	24	Dead	Removed-Exempt-Unhealthy 1)
5111	Bur Oak	22		Saved
5112	Bur Oak	18		Saved
5113	Bur Oak	24		Saved
5114	Bur Oak	20		Saved
5115	Red Oak	39	BD, Dead	Removed-Exempt-Unhealthy
5116	Bur Oak	18		Saved
5117	Bur Oak	22		Saved
5118	Eastern Red Cedar	7		Removed
5119	Bur Oak	27		Removed
5120	Bur Oak	26		Removed
5121	Bur Oak	24		Saved
5122	Bur Oak	19		Saved
5123	Bur Oak	16		Saved
5124	Bur Oak	17		Saved
5125	Bur Oak	21		Saved
5126	Bur Oak	13		Saved
5127	Bur Oak	16		Saved
5128	Bur Oak	20		Saved
5129	Bur Oak	18		Saved
5130	Bur Oak	27		Saved 1)
5131	Bur Oak	12		Saved
5132	Bur Oak	26		Saved
5133	Eastern Red Cedar	9		Removed
5134	Bur Oak	17		Saved
5135	Bur Oak	23		Removed
5136	Bur Oak	24		Removed
5137	Bur Oak	16		Removed
5138	Bur Oak	24		Removed
5139	Bur Oak	26		Removed
5140	Bur Oak	29		Removed
5141	Bur Oak	24	X	Removed
5142	Bur Oak	38		Removed
5143	Bur Oak	22		Removed
5144	Bur Oak	24		Removed
5145	Bur Oak	20		Saved 1)
5146	Bur Oak	19		Saved
5147	Bur Oak	24		Saved
5148	Bur Oak	29		Saved
5149	Bur Oak	28	PD	Removed-Exempt-Unhealthy 1)
5150	Bur Oak	19		Saved
5151	Bur Oak	18		Saved
5152	Bur Oak	28		Saved
5153	Red Oak	70	BD-35%	Saved-Exempt-Unhealthy
5154	Bur Oak	35		Removed
5155	Bur Oak	34		Saved
5156	Black Willow	28	BD-30%	Saved-Exempt-Unhealthy
5157	Bur Oak	37		Saved
5158	Bur Oak	39		Saved
5159	Basswood	39		Removed
5160	Bur Oak	42		Saved
5161	American Elm	12		Removed
5162	Bur Oak	32		Saved
5163	Eastern Red Cedar	7		Saved
5164	Eastern Red Cedar	7		Saved
5165	Ash	12	EAB	Saved-Exempt-Unhealthy
5166	Eastern Red Cedar	9	X	Saved
5167	Siberian Elm	12	Invasive	Saved-Exempt-Invasive
5168	Red Oak	32		Saved
5169	Eastern Red Cedar	6		Saved
5170	American Elm	12		Saved
5171	Bur Oak	30		Saved
5172	Basswood	29		Saved
5173	Siberian Elm	13	Invasive	Saved-Exempt-Invasive
5174	Sugar Maple	26		Saved
5175	Eastern Red Cedar	10		Saved
5176	Bur Oak	50	BD-10%	Saved
5177	Ash	30	BD-65% EAB	Saved-Exempt-Unhealthy
5178	Bur Oak	32		Saved
5179	Ash	13	EAB	Saved-Exempt-Unhealthy
5180	Eastern Red Cedar	5		Saved
5181	Bur Oak	30		Saved
5182	Bur Oak	40		Saved
5183	Bur Oak	34		Saved
5184	Eastern Red Cedar	7		Saved
5185	American Elm	12	BD, Dead	Removed-Exempt-Unhealthy
5186	American Elm	12	BD, Dead	Removed-Exempt-Unhealthy
5187	Boxelder	14		Removed
5188	American Elm	14		Saved
5189	Ash	37	EAB	Saved-Exempt-Unhealthy
5190	Basswood	30	X	Saved
5191	American Elm	20		Saved
5192	Bur Oak	74		Saved
5193	Basswood	22		Saved
5194	Eastern Red Cedar	13		Saved
5195	Eastern Red Cedar	6		Saved
5196	Basswood	30		Saved
5197	Basswood	36	X	Saved
5198	Eastern Red Cedar	7		Saved
5199	Eastern Red Cedar	6		Saved
5200	Eastern Red Cedar	9		Saved
5201	Eastern Red Cedar	11		Saved
5202	Eastern Red Cedar	21		Saved
5203	Basswood	37	X	Saved
5204	Basswood	21		Saved
5205	American Elm	12		Saved
5206	Red Oak	29		Saved
5207	Eastern Red Cedar	15		Removed
5208	Bur Oak	34		Saved
6001	Cottonwood	13		Offsite
6002	Cottonwood	12		Offsite
6003	Eastern Red Cedar	2		Offsite
6004	Eastern Red Cedar	2		Offsite
6005	Eastern Red Cedar	2		Offsite
6006	Eastern Red Cedar	1		Removed
6007	Boxelder	18		Offsite
6008	Boxelder	22		Offsite
6009	Boxelder	12	x	Saved
6010	American Elm	14		Offsite
6011	Ash	13	EAB	Offsite
6012	Black Willow	23	x	Offsite
6013	Black Willow	54		Offsite
6014	American Elm	12		Offsite
6015	Eastern Red Cedar	2		Saved
6016	Eastern Red Cedar	3		Saved
6017	Cottonwood	14		Offsite
6018	Cottonwood	15		Offsite
6019	Cottonwood	14		Offsite
6020	Boxelder	12		Saved
6021	Eastern Red Cedar	2		Saved
6022	Ash	12	EAB	Saved-Exempt-Unhealthy
6023	Ash	12	EAB	Saved-Exempt-Unhealthy
6024	Ash	13	EAB	Saved-Exempt-Unhealthy
6025	Eastern Red Cedar	6		Removed
6026	Eastern Red Cedar	5		Removed
6027	Eastern Red Cedar	4		Removed
6028	Eastern Red Cedar	1		Removed
6029	Eastern Red Cedar	8		Removed
6030	Eastern Red Cedar	2		Removed
6031	Eastern Red Cedar	5		Removed
6032	Eastern Red Cedar	7		Removed
6033	Eastern Red Cedar	3		Removed
6034	Eastern Red Cedar	2		Removed
6035	Eastern Red Cedar	7		Removed
6036	Eastern Red Cedar	7		Removed
6037	Eastern Red Cedar	10		Removed
6038	Eastern Red Cedar	3		Removed
6039	Eastern Red Cedar	3		Removed
6040	Eastern Red Cedar	2		Removed
6041	Boxelder	14	x	Offsite
6042	Boxelder	14		Offsite
6043	Boxelder	12		Offsite
6044	American Elm	12		Removed
6045	Ash	12	EAB	Removed-Exempt-Unhealthy
6046	Ash	15	EAB	Removed-Exempt-Unhealthy
6047	Ash	13	EAB	Removed-Exempt-Unhealthy
6048	Ash	15	EAB	Removed-Exempt-Unhealthy
6049	Ash	14	EAB	Removed-Exempt-Unhealthy
6050	Eastern Red Cedar	1		Removed
6051	Eastern Red Cedar	1		Removed
6052	Ash	15	EAB	Offsite
6053	Ash	12	EAB	Removed-Exempt-Unhealthy
6054	Eastern Red Cedar	4		Removed
6055	American Elm	4		Removed
6056	Ash	12	EAB	Removed-Exempt-Unhealthy
6057	Eastern Red Cedar	3		Removed
6058	Eastern Red Cedar	2		Removed
6059	Eastern Red Cedar	1		Removed
6060	Black Cherry	12		Removed
6061	Boxelder	12		Removed
6062	Ash	13	EAB	Removed-Exempt-Unhealthy
6063	American Elm	16		Offsite
6064	Boxelder	18	x	Offsite
6065	Ash	14	pd 40% trunk	Offsite
6066	Cottonwood	12		Removed

NOTE: 1) 5/24/22 SITE VISIT / FIELD REVIEW WITH CITY

CONTRACTOR: DOBOSZENSKI AND SONS

RECORD DRAWING: GRADING
CONFORMING TO CONSTRUCTION RECORDS.
BY Ben Passolt DATE 12/15/22
WESTWOOD PROFESSIONAL SERVICES

1" = 50'
0' 50' 100' 150'

N:\0024429.00\DWG\CIVIL\FINAL\FINAL GRADING\0024429S-TPP01.DWG

OAK CREEK

DESIGNED:	FDH II
CHECKED:	FDH II
DRAWN:	FDH III
HORIZONTAL SCALE:	###########
VERTICAL SCALE:	### OR ###

INITIAL ISSUE: 04/22/2022
REVISIONS:
05/24/22 CITY COMMENTS
06/21/22 WATERSHED COMMENTS
06/28/22 OAK CREEK DRIVE GRADE & PAD L1-2; B3
07/22/22 CCWMO REVIEW COMMENTS
07/26/22 CITY COMMENTS
08/01/22 WATERSHED COMMENTS
08/04/22 TRAIL GRADE REV
08/09/22 CITY REVIEW COMMENTS
08/25/22 REV HOUSE STYLE L5,B1
12/15/22 RECORD PLAN
09/19/22 CITY COMMENTS
08/29/22 CCWMO REVIEW COMMENTS

PREPARED FOR:

DR HORTON, INC. - MINNESOTA
20860 KENBRIDGE COURT, SUITE 100
LAKEVILLE, MINNESOTA 55044

I HEREBY CERTIFY THAT THIS PLAN WAS PREPARED BY ME OR UNDER MY DIRECT SUPERVISION AND THAT I AM A DULY LICENSED LANDSCAPE ARCHITECT UNDER THE LAWS OF THE STATE OF MINNESOTA

Nicholas Meyer

DATE: 09/19/22 LICENSE NO. 53774

OAK CREEK
CHASKA, MN

Westwood
Phone (952) 937-5150 12701 Whitewater Drive, Suite #300
Fax (952) 937-5822 Minnetonka, MN 55343
Toll Free (888) 937-5150 westwoodps.com
Westwood Professional Services, Inc.

TREE PRESERVATION PLAN & DATA

PROJECT NUMBER: 0024429.00

SHEET NUMBER: 19 OF 20

DATE: 09/19/22

© 2022 Westwood Professional Services, Inc.

Call 48 Hours before digging:
811 or call811.com
Common Ground Alliance

Native Seeding Legend

- WET MEADOWS S & W
  SEED MIX (34-271)
  TOTAL AREA (1.0 AC)
- STORMWATER NATIVE
  SEED MIX (33-261)
  TOTAL AREA (2.3 AC)
- MESIC PRAIRIE GENERAL
  SEED MIX (35-241)
  TOTAL AREA (4.9 AC)

* ALL DISTURBED AREAS TO BE SODDED UNLESS NOTED OTHERWISE

* DISTURBANCE IN COUNTY R.O.W. SHOULD BE RESEEDED WITH LOW MAINTENANCE TURF.

CONTRACTOR: DOBOSZENSKI AND SONS

RECORD DRAWING: GRADING
CONFORMING TO CONSTRUCTION RECORDS.
BY Ben Possolt DATE 12/15/22
WESTWOOD PROFESSIONAL SERVICES

N

1" = 100'

0' 100' 200' 300'

N:\0024429.00\DWG\CIVIL\FINAL\FINAL GRADING\0024429C-SEED.DWG

OAK CREEK

DESIGNED:	FDH II
CHECKED:	FDH II
DRAWN:	FDH III
HORIZONTAL SCALE:	99.999999'
VERTICAL SCALE:	20' OR 10'

INITIAL ISSUE: 04/22/2022

REVISIONS:

06/21/22	WATERSHED COMMENTS	08/01/22	WATERSHED COMMENTS
06/28/22	OAK CREEK DRIVE GRADE & PAD L1-2; B3	08/04/22	TRAIL GRADE REV
07/22/22	CCWMO REVIEW COMMENTS	08/09/22	CITY REVIEW COMMENTS
07/26/22	CITY COMMENTS	08/25/22	REV HOUSE STYLE L5,B1
		12/15/22	RECORD PLAN
		09/19/22	CITY COMMENTS
		08/29/22	CCWMO REVIEW COMMENTS

PREPARED FOR:

DR HORTON, INC. - MINNESOTA

20860 KENBRIDGE COURT, SUITE 100
LAKEVILLE, MINNESOTA 55044

I HEREBY CERTIFY THAT THIS PLAN WAS PREPARED BY ME OR UNDER MY DIRECT SUPERVISION AND THAT I AM A DULY LICENSED PROFESSIONAL ENGINEER UNDER THE LAWS OF THE STATE OF MINNESOTA.

Francis D. Hagen

DATE: 09/19/22 LICENSE NO. 53774

OAK CREEK

CHASKA, MN

Westwood

Phone (952) 937-5150
Fax (952) 937-5822
Toll Free (888) 937-5150

12701 Whitewater Drive, Suite #300
Minnetonka, MN 55343
westwoodps.com

Westwood Professional Services, Inc.

SEEDING PLAN

PROJECT NUMBER: 0024429.00

SHEET NUMBER: 20 OF 20

DATE: 09/19/22

REQUEST FOR ACTION
CHASKA PLANNING COMMISSION
04/12/2023

Subject: **Rear Building Addition — Variance Request to Deviate from the Bavaria Road Building Setback (Section 15.28.100.A)**

Applicant: Jimmy Son

Location: 1142 Rosemary Lane

Case No.: 2023-09

Synopsis: Applicant is requesting the approval of a variance request to deviate from the Bavaria Road building setback in order to build an addition on the rear portion of their home

Prepared By: Elizabeth Hanson

Recommendation: Motion to recommend denial to City Council

Background

The subject property at 1142 Rosemary Lane is par of the development known as Nickel Creek, which was previously called Stone Rose. The concept plan for Stone Rose was approved at the May 10, 2006, Planning Commission meeting and the March 19, 2007, City Council meeting.

On August 20, 2007, the rezoning (PRD-53; Ord. No. 808) and Preliminary Plat for Stone Rose was approved. In July of 2010, the developer of Stone Rose received approval of a revised Preliminary Plat for the subject property, which was then renamed to "Nickel Creek" and a Zoning Ordinance Amendment (Ord. No. 842) to Ordinance No. 808 in order to update the exhibits and new lot/block numbers of the plat. Both ordinances refer to PRD-47 (Ord. No. 785) to establish development standards (ie. setbacks).

In May of 2011, the Final Plat for the first phase of Nickel Creek (24 lots) was approved. In January of 2012, the Final Plat for the second phase of Nickel Creek (45 lots) was approved.

On April 15, 2013, the final plat for Nickel Creek 4th Addition (known as the third phase) was approved. This plat was approved for 46 lots, which includes 1142 Rosemary Lane. An outlot, Outlot A, was created in this plat to preserve significant trees. Within this outlot there are a number of significant trees, however, there are 3 significant bur oak trees (ranging in size from 29-31 caliper inches) that are located directly between 1142 Rosemary Lane and 1146 Rosemary Lane.

Existing Conditions

The property, 1142 Rosemary Lane, is legally described as Lot 8, Block 1 of Nickel Creek 4th Addition, and is approximately 0.27 acres (11,823 square feet) in size. The property currently

consists of a two-story single-family home with a small shed and attached deck in the rear yard. The rear yard directly abuts Bavaria Road. The home is currently setback 5 feet from the north property line, 13 feet from the south property line, and 127 feet from the centerline of Bavaria Road. The attached deck is 115 feet from the centerline. There are 3 significant bur oak trees (29-31 caliper inches) that are situated just north of this lot).

Land Use
The property, 1142 Rosemary Lane, is currently zoned PRD-53 (Planned Residential District) and is in the Nickel Creek 4th Addition. The PRD-53 zoning has the following setback requirements for 1142 Rosemary Lane:

- Front: 26 feet
- Rear: 30 feet
- Side: 5 feet
- Side, corner: 20 feet
- Bavaria Road: 125 feet from the centerline for buildings; 115 feet from centerline for attached decks

Bavaria Road Classification
Bavaria Road (between Pioneer Trail and 82nd Street) is currently classified as a major collector road within the overall transportation network. The City's 2040 comprehensive plan guides this section as being upgraded to an arterial roadway as Chaska and surrounding community growth occurs. Arterial roadways, and any County or State roads, require greater setbacks to accommodate existing and future lane widths, medians, trails and boulevards for safety and traffic operations. Bavaria Road requires a building setback of 125 feet from its centerline.

VARIANCE FACTS
In order for a variance to be granted, the applicant must provide a written statement containing the following:

- Conditions that create a hardship, *or practical difficulty,* (see definition below) that would prohibit reasonable development without a Variance;
- Conditions on the property that create a hardship, *or practical difficulty*, that are not present on similar sized lots in the same area and zoning district; and
- Relationships with abutting property that will not be adversely affected by the Variance.

Minnesota State Statue in Chapter 462.357, Subdivision 6, (2), defines the following: "Variances shall only be permitted when they are in harmony with the general purposes and intent of the ordinance and when the variances are consistent with the comprehensive plan. Variances may be granted when the applicant for the variance establishes that there are practical difficulties in complying with the zoning ordinance. "Practical difficulties," as used in connection with the granting of a variance, means that the property owner proposes to use the property in a reasonable manner not permitted by the zoning ordinance; the plight of the landowner is due to circumstances unique to the property not created by the landowner; and the variance, if granted, will not alter the essential character of the locality. Economic considerations alone do not constitute practical difficulties. Practical difficulties include, but are not limited to, inadequate access to direct sunlight for solar energy systems."

The general standards for approval of a variance are found in Section 15.08.080, of the Zoning Ordinance, which states the following:

"The City Council may grant variances from the literal provisions of this Ordinance where their strict enforcement would cause undue hardship because of circumstances unique to the individual property under consideration, and to grant such variances only when it is demonstrated that such actions will be in keeping with the spirit and intent of this Ordinance.

"Undue hardship" (*aka Practical Difficulties per state statute*) as used in connection with the granting of a variance means the property in question cannot be put to a reasonable use if used under conditions required by the official controls, the plight of the landowner is due to circumstances unique to his property not created by the landowner, and the variance, if granted, will not alter the essential character of the locality. Undue hardship also includes, but is not limited to, inadequate access to direct sunlight for solar energy systems.

Economic considerations alone shall not constitute an undue hardship if reasonable use for the property exists under the terms of this Ordinance. Variances shall be granted for earth-sheltered construction as defined herein when in harmony with this Ordinance.

The City Council may not permit as a variance any use that is not permitted under the Ordinance for property in the district where the affected person's land is located. The City Council may permit as a variance the temporary use of a one family dwelling as a two family dwelling. The City Council may impose conditions in the granting of a variance to insure compliance and to protect adjacent properties."

The following are some of the questions Staff asks with each variance request.

- The variance shall not impair the health, safety, comfort and general welfare of the public?
- The variance shall not be contrary to the intent and purpose of the Comprehensive Plan, Official Map or any ordinances of the City?
- Variances shall not allow a use in a district that is not otherwise allowed?
- The variance should not be greater than necessary to accomplish the landowner's objective?
- Are there alternative locations, development concepts or space requirements that would reduce or eliminate the request?
- The variance, if granted, would not alter the essential character of the locality (neighborhood)?
- Conforming to City Code, the property could not be put to a "reasonable" use?
- The variance would improve an existing non-conforming condition.
- The variance will not impair an adequate supply of light and air to adjacent property, or substantially increase the congestion of the public streets, or increase the danger of fire, or endanger the public safety, or substantially diminish or impair property values within the neighborhood?

STAFF EVALUATION

The applicant is requesting a variance from zoning ordinance Section 15.28.100.A which states:

"<u>Setback From Principal Roadway</u>. No building shall be located closer to the centerline of a public road than as established below:

<u>Minor Arterial</u>
- 125 feet each side (Audubon Road north of existing Highway 212 [County Road 17]) (Engler Boulevard [County Road 10]) (Lyman Boulevard [County Road 18]) (Pioneer Trail [County Road 14]) (Bavaria Road north of Pioneer Trail) (CR 140 from CR 61 to CR 11)

Setbacks for attached decks shall be ten (10) feet less than the requirement for buildings."

The applicant is proposing to add a rear building addition to their existing home for the purpose of an underground sport court that would encroach into the Bavaria Road building setback. The building addition shows a deviation of 12 feet into the Bavaria Road setback (113 feet from centerline). In essence, the applicant is proposing to add a building addition within the footprint of where the deck currently sits today.

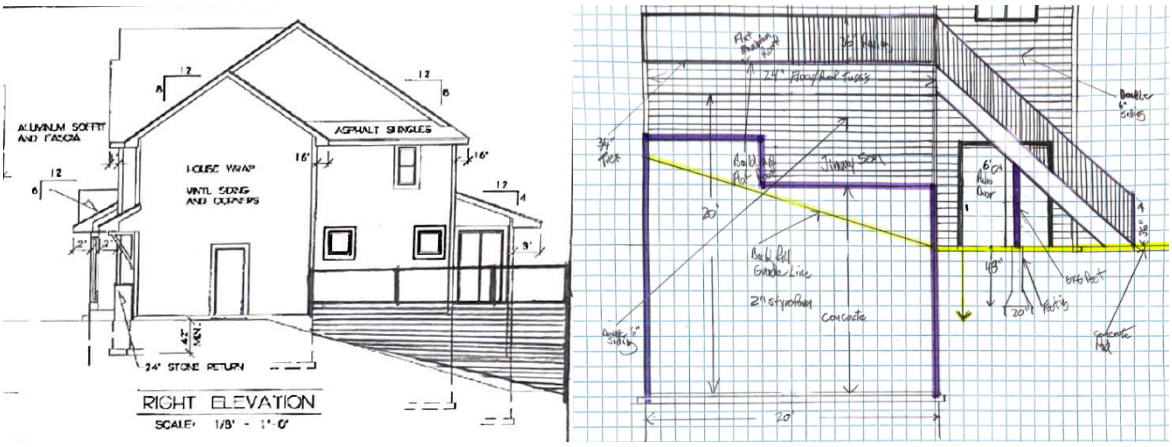

(Left: side (north elevation) Right: rear (west elevation))

As noted above, attached decks can encroach into the rear building setback up to 10 feet. In this instance the deck setback would be 115 from the centerline of Bavaria Road. It should be noted that the City allows up to 2-foot cantilevers into setbacks as long as the posts meet the required setback. The existing attached deck on this home meets this standard.

<u>Applicant's Statement</u>

<u>Conditions that create a hardship that would prohibit reasonable development without a Variance</u>
The applicant states that their home as is, is a beautifully constructed home. But over the course of the pandemic, they have continued to be situated more at home than they had ever imagined. The applicant's wife and the applicant almost exclusively work from home and the constant struggle to quarantine their kids when sicknesses arise from school/childcare has also weighed on them. With Minnesota winters as long as they are, and them being conservative with the uptick in not just covid, but RSV, the flu, and other illnesses, they are unable to adequately use community centers and gyms to maintain a healthy/active lifestyle. With RSV specifically, two out of three of their children have been especially affected, having to spend time hospitalized at Childrens in the Pediatric ICU due to an especially severe case. As a result,

especially in the winter, they try to minimize to the greatest extent possible unnecessary exposures in community settings. Because of this, they are requesting a variance against the setback on their rear property to construct an indoor gymnasium, that is of a minimal dimension to be put to use by not only their family, but others in the neighborhood when it's safe to do so, to live a healthy lifestyle, and continue to practice various sports activities that the kids (and the adults) use is an essential outlet to support their mental and physical health: Basketball, Volleyball, Baseball, Gymnastics, Ninja Warrior, pickle ball, badminton. Their intention is to build the sport court underneath their existing deck footprint and build down as to not alter the essential character of the neighborhood.

The impact of physical activity on mental health is well established and cannot be understated. On a very personal note, their family, especially in the last few years, have seen dealing with some serious grief/mental health challenges, due in part to the deaths of multiple immediate family members. Simply put, physical activity and taking care of their physical health is a fundamental part of their treatment and coping, and this sport court addition is absolutely critical to that effort.

Conditions on the property that create a hardship that are not present on similar sized lots in the same area and zoning district
The applicant states that many, if not most, similar sized homes and lots in their neighborhood and throughout the city are not as restrictive as theirs in terms of the rear setback regulations, which for their home requires a 125 foot setback from the center road line of Bavaria road and their property. Unfortunately, due to this rear setback, the applicant believes there are no practical alternative locations, development concepts or reasonable space requirements that would reduce or eliminate this request. The location of the sport court addition they have proposed is the most practical and reasonable location to build their desired sport court and is the only one that wouldn't require a very significant and costly change to their existing house (such as full modification/movement of an exterior wall).

Relationships with abutting property that will not be adversely affected by the Variance
The applicant states that because they have chosen to build toward the back of their home and requesting a variance against the setback, they will be adhering to the setback requirements of the side of our home, thus, not adversely affecting their relationship or spacing with their abutting neighbors.

Variance Standards & Staff Analysis

The variance shall not impair the health, safety, comfort and general welfare of the public?

The applicant believes they are being mindful of the requested variance to build their sport court toward the back of their private back yard, building down and within the current design of their deck so as to not be a burden to their neighbors, whom they have a great relationship with and are committed to maintaining. With the proper construction and engineering plans, they do not foresee impairment of the health and safety of the public, especially since it will be built in their private backyard that is fenced in and not accessible to the public.

From staff's perspective the proposed rear addition does not necessarily have a direct impairment on the health, safety, comfort and general welfare of the public, however indirectly, granting this variance would set a negative precedence (with no unique reasoning) that conflicts with similar properties in the area that have met the building setback. And therefore, the variance, if granted, would have an unfair advantage over other properties.

The variance shall not be contrary to the intent and purpose of the Comprehensive Plan, Official Map or any ordinances of the City?

The applicant believes that they are requesting a variance that is minor in scale of 10-15' from the back of their home to add a sport court underneath their current deck. They believe it is designed to not take up any more space than is needed and will follow the current look and feel of their home and neighborhood.

Staff's analysis is that the proposal is contrary to the Comprehensive Plan, Official Map and ordinances of the City. The proposal is contrary to the Comprehensive Plan. The 2040 Comprehensive Plan guides Bavaria Road to be a minor arterial roadway, which, per ordinance (Section 15.28.100.A), requires a certain building setback (125 feet from centerline). Setbacks are assigned to various roadways in the City ranging from collector roads up to state highways. Setbacks are based on the current and proposed volume and improvements of such roadways. Bavaria Road is currently a collector road, but is classified in the City's Comprehensive Plan as a future minor arterial. As such the setback that applies is consistent with the future minor arterial classification, and therefore is appropriate. The request for a variance from this building setback is contrary to the Comprehensive Plan and zoning ordinance of the City.

Variances shall not allow a use in a district that is not otherwise allowed?

The variance will not allow a use in the zoning district that is not otherwise allowed.

The variance should not be greater than necessary to accomplish the landowner's objective?

The applicant states that the variance will allow them to build a small indoor basketball court that will suffice as a gymnasium to be used by their family and neighborhood friends. It is similarly sized to other indoor sport courts in homes located in other neighborhoods that may be comparable to theirs (for example, Robert Thomas homes in The Harvest, Chaska).

In staff's opinion the variance proposal is greater than necessary to accomplish the landowner's objective. A proposal to add an indoor sport court is not a necessity for a home to be reasonably used. The building addition would total 20 feet high (~10 feet will show above ground, and remainder will be below) and roughly 567 square feet of area.

Are there alternative locations, development concepts or space requirements that would reduce or eliminate the request?

The applicant states there are no other practical alternative locations, development concepts or reasonable space requirements that would reduce or eliminate this request, particularly because the rearmost exterior wall of their home already sits in close proximity to the 125 foot setback.

They believe building to the side would almost assuredly require them to request an additional variance to the side setbacks between them and abutting neighbors, would alter the character of their house, and may cause an eye sore to their neighbors/the public.

In staff's perspective, the indoor sport court is not necessary to make the home usable. Additionally, there is space behind the garage and to the side of the home that could be added on while still meeting the required setback. Another concept to explore would be an outdoor sport court in the rear yard.

The variance, if granted, would not alter the essential character of the locality (neighborhood)?

The applicant states they have constructed their plans to minimize the effect this variance might have on relationships with abutting properties and the character of our neighborhood. More specifically, they propose to build this sport court beneath their existing deck, and as a result they expect this addition to be barely noticeable, with little to no impact on the look and character of the neighborhood.

In staff's opinion, the variance would alter the essential character of the locality. The proposal to add an addition encroaching into the building setback along Bavaria Road would set a negative precedence for other properties along Bavaria Road. Bavaria Road is classified as a minor arterial in the City's 2040 Comprehensive Plan and thus requires a setback of 125 feet from the centerline.

In addition, the area north of Pioneer Trail along Bavaria Road is primarily rural-type properties (RR-2 or PRD-R-LS), and cluster developments (Chevalle), and because of that they are spaced out and setback a great distance from Bavaria Road. The homes along Rosemary Lane are some of the closest homes to Bavaria Road as they are set right up to the 125 foot centerline setback. Allowing the variance would impede on that viewshed further.

Conforming to City Code, the property could not be put to a "reasonable" use?

The applicant states that they are in need of an alternative to gymnasiums and recreation centers due to the pandemic to remain active and healthy, especially during long Minnesota winters, they are not able to adequately use their home (as it is) to exercise and practice sports, which is a fundamental component of their health.

In staff's perspective, the property is already put to reasonable use conforming to the building setback. The property is currently being put to reasonable use having a single-family home, attached garage and accessory shed which is consistent with other homes in the neighborhood. The request to add an indoor sport court is not generally a use that is necessary for a property to be "reasonably" used.

The variance would improve an existing non-conforming condition.

There are no non-conformities that staff are aware of.

The variance will not impair an adequate supply of light and air to adjacent property, or substantially increase the congestion of the public streets, or increase the danger of fire, or endanger the public safety, or substantially diminish or impair property values within the neighborhood?

The applicant states that they have planned for their structure to be built down and underneath their deck as to not impair any supply of light and air to adjacent properties as well as dimmish or impair property values within the neighborhood; the construction will be barely noticeable. Because it would be built in their fenced-in private back yard, they will not be increasing any congestion to the public streets, increase fire danger or endanger public safety.

In staff's opinion, the variance would impair the public safety component of the road setback. The setback is put in place to provide adequate separation from higher used roads, and thus upholding the required setback would maintain proper safety measures.

FINDINGS

Staff believes there is not an undue hardship (practical difficulty) on the applicant, and therefore a variance should not be granted, for the following reasons:

1. The property in question can be put to a reasonable use under the current regulations and setbacks. The property currently has a home, attached garage, and accessory shed on the property. There are no unique physical constraints on the property which would put the applicant in a position of not reasonably using their property per this request.

2. The variance is greater than necessary to reasonably use the property since indoor sport courts are not a necessary use on a single-family property. A reasonable alternative is an outdoor sport court or building addition that meets setbacks.

3. The variance, if granted, will alter the essential character of the area. A rear building addition encroaching into the minimum building setback would set a negative precedence for other homes along Bavaria Road and alter the essential character of the area.

4. The variance, if granted, is contrary to the City's Comprehensive Plan and zoning ordinance (Section 15.28.100.A), which classifies Bavaria Road as a minor arterial and requires a 125 foot centerline setback.

PLANNING COMMISSION ACTION REQUESTED

Motion to recommend denial of the major variance request to encroach into the Bavaria Road setback twelve (12) feet for the purpose of an indoor sport court building addition (Zoning Ordinance 15.28.100.A), to the City Council based on the following findings:

FINDINGS:

1. The property in question can be put to a reasonable use under the current regulations and setbacks. The property currently has a home, attached garage, and accessory shed

on the property. There are no unique physical constraints on the property which would put the applicant in a position of not reasonably using their property per this request.

2. The variance is greater than necessary to reasonably use the property since indoor sport courts are not a necessary use on a single-family property. A reasonable alternative is an outdoor sport court or building addition that meets setbacks.

3. The variance, if granted, will alter the essential character of the area. A rear building addition encroaching into the minimum building setback would set a negative precedence for other homes along Bavaria Road and alter the essential character of the area.

4. The variance, if granted, is contrary to the City's Comprehensive Plan and zoning ordinance (Section 15.28.100.A), which classifies Bavaria Road as a minor arterial and requires a 125 foot centerline setback.

City of Chaska
Memorandum

To: **Planning Commission**
From: **Matt Clark, City Engineer**
Date: **April 4, 2023**
Subject: **1142 Rosemary Lane**

Bavaria Road between Pioneer Trail and 82nd Street currently is designated as a major collector road within the overall transportation network. The City's 2040 comprehensive plan guides this section as being upgraded to an arterial roadway as Chaska and surrounding community growth occurs. Arterial roads require greater setbacks for roadways to accommodate lane widths, medians, trails and boulevards for safety and traffic operations. With future County highway extensions planned and traffic patterns in the area projected to increase, the City is not able to modify the standards that were put in place with the original approvals.

CITY OF CHASKA LAND USE/DEVELOPMENT APPLICATION

DATE: 2/22/2023 PLANNING CASE NUMBER: 304480080

APPLICATION/REQUEST FOR:	X	APPLICATION FEE	PROCESSING FEE	DATE PAID	RECEIPT NUMBER
Planned Development Districts					
Concept Plan/Rezoning					
Preliminary Plat					
Final Plat (Account Codes A & C)					
Non PDD					
Concept Plan/Rezoning					
Preliminary Plat					
Final Plat					
Lot Consolidation/Division and Vacations (Account Codes A & C)					
Others					
Building/Site Plan Review					
Public Hearing Mailing List Fee					
Zoning/Comp Plan Amend.					
Other (Account Codes A & C)					
Permits					
Special (Conditional) Use Permit					
Variance		$198.00	$416.00		
Site Alteration Permit (HPC)					
Mining/Filling Permit (Account Codes B & C)					
Total Amount Due		$ 614.00 +	$ 125.00 +	Equals	$739.00

Location of Property: 1142 Rosemary Lane

Legal Description of Property: Block 001- Lot 008

Existing Zoning: PRD53 Use: Residential home

Description of Request:

Number of Acres: Lots Units

Owner Name: Jimmy Son Phone: 818-314-8593

Street: Rosemary Ln City: Chaska State: MN Zip: 55318

Applicant Name: Scott Corbin-Corbins LLC Phone: 612-270-1432

Street: 8850 Mccoll Dr City: Savage State: MN Zip: 55378

Property Owner Signature: Date: 3/6/2023

Applicant Signature: Date:
(if different than owner)

* Note: Time spent by the City's Planning, Engineering, Landscape Architect and/or Legal Consultants reviewing application materials will be billed directly with payment within 30 days of date of invoice.

**Account Codes for Office Use: A: 101-1710-3440 (Planning & Zoning Application Fees) B: 101-1710-3441 (Processing Fees)

*** S:\Work\Community Development\Forms

City of Chaska
Application for Building Permit

Today's Date: 2/13/2023 Permit Number: B_____

1. Lot: 8 Block: 1 Addition: NORTH CREEK FOURTH P.I.D._____

Site Address: 1142 ROSEMARY LN CHASKA MN 55318

2. Owner: *Name* JIMMY SON *Email* SON.JIMMY@GMAIL.COM *Phone* 818-314-8593

Address 1142 ROSEMARY LN *City* CHASKA *State* MN *Zip* 55318

3. Contractor: *Name* SCOTT CORBIN *Email* CORBINSLLC@GMAIL.COM *Phone* 612-270-1432

Address 8850 MCCOLL DR *City* SAVAGE *State* MN *Zip* 55378

4. Contact: *Name* ASHLEA ANDERSON *Email* CORBINSLLC@GMAIL.COM *Phone* 612-772-1082

5. Type of Work: New ☐ Addition ☑ Alteration ☐ Repair ☐ Move ☐ Demolition ☐

6. Describe Work: SPORT COURT

7. Estimated Value Including Labor: $80,000.00 Building Dept value: _____

8. Material Filed with Application: ☑ One set of Plans ☑ Certified Survey (Res.) ☐ Truss Specs
☑ Site Plan (Comm.) ☐ Energy Calculations ☐ Ventilations Forms (Res)

9. Special Conditions: _____

10. Contractor License#: BC760651 Lead Certification#: NAT-F220814-1

I hereby certify that the information contained herein is correct and agree to do the proposed work in accordance with provisions of the ordinances of the City of Chaska, and State Building codes. I further agree that any plans and specifications submitted herein shall become part of this permit application. This permit becomes invalid if work is suspended or abandoned for more than 180 days.

PRINT NAME: SCOTT CORBIN

SIGNATURE: _____ DATED: 2/13/2023

of: ☑ *Contractor* ☐ *Authorized Agent* ☐ *Owner*

Occupancy Group: A B E F H I M R S U I.R.C. Division: 1 2 3 4 A&A

PERMIT FEE SCHEDULE:

PERMIT FEE	$_____	**($60.00 Minimum)**	SAC	$_____
SURCHARGE	$_____		SEWER TAP FEE	$_____
PLAN CHECK FEE	$_____		SEWER HOOK-UP FEE	$_____
PENALTY	$_____		WATER HOOK-UP	$_____
OTHER	$_____		WATER TAP	$_____
TECHNOLOGY FEE	$ 5.00		SITE INSPECTION	$_____
			ESCROW ($2,500.00)	$_____
			TOTAL DUE	$_____

Approved By: _____ *Date:* _____ *Receipted in By:* _____ Check ☐ Cash ☐

Received By: _____ *Date:* _____ *Ch.#* _____ *$* _____ *Date:* _____

One City Hall Plaza, Chaska, MN 55318 / PH: (952) 448-9200 / Email: inspections@chaskamn.com

City of Chaska
Contractor Information Form

Contractor Business Name Corbins LLC

***Contractor Business Name is the name registered with the Department of Labor and Industry for the license/registration/bond.**

License/Registration/Bond Number: 1. BC760651 Expiration Date 3/31/2025

License/Registration/Bond Number: 2. _____ Expiration Date _____

License/Registration/Bond Number: 3. _____ Expiration Date _____

Lead Certification Number: NAT-F220814-1 Expiration Date 1/13/2026

Mailing Address: Street 8850 McColl Dr City Savage State MN Zip 55378

Physical Address: Street 8850 Mccoll Dr City Savage State 553 Zip 55378

Primary Contact: Name Ashlea Anderson

Email corbinsllc@gmail.com Phone 6127721082

*Provide any additional points of contact below

Point of Contact: Name Ashlea Anderson

Email Corbinsllc@gmail.com Phone 6127721082

Point of Contact: Name Scott Corbin

Email corbinsllc@gmail.com Phone 6122701432

Point of Contact: Name _____

Email _____ Phone _____

DEPARTMENT OF LABOR AND INDUSTRY

LICENSE/CERTIFICATE/REGISTRATION DETAIL

Class Type:	RESIDENTIAL BLDG CONTRACTOR	Number:	BC123456
Application No:	123456	Status:	ISSUED
Expire Date:	3/31/2023	Effect Date:	1/14/2022
Orig Date:	1/14/2022	Print Date:	1/17/2022
Enforcement Action:	NO		
Workplace Experience:	N/A		

EXAMPLE

Legal Contractor Business Name

Name:	ABC CONSTRUCTION LLC
Address:	123 ABC ST Chaska, MN 55318
Phone:	555-555-5555

1142 Rosemary Lane
Chaska, MN 55318

March 6, 2023

Carver County Board of Adjustment
600 E. 4th Street
Chaska, MN 55318

Dear Board of Adjustment Member:

We are requesting a variance for a reduced rear setback for our home at 1142 Rosemary Lane in Chaska, so that we can add an indoor sport court that will support the health of our young family.

Our responses to the narrative requirements are as follows:

- **Conditions that create a hardship that would prohibit reasonable development without a Variance:**
    - *Our home as is, is a beautifully constructed home. But over the course of the pandemic, we have continued to be situated more at home than we had ever imagined. My wife and I almost exclusively work from home and the constant struggle to quarantine our kids when sicknesses arise from school/childcare has also weighed on us. With Minnesota winters as long as they are, and us being conservative with the uptick in not just covid, but RSV, the flu, and other illnesses, we are unable to adequately use community centers and gyms to maintain a healthy/active lifestyle. With RSV specifically, two out of three of our children have been especially affected, having to spend time hospitalized at Childrens in the Pediatric ICU due to an especially severe case. As a result, especially in the winter, we try to minimize to the greatest extent possible unnecessary exposures in community settings. Because of this, we are requesting a variance against the setback on our rear property to construct an indoor gymnasium, that is of a minimal dimension to be put to use by not only our family, but others in the neighborhood when it's safe to do so, to live a healthy lifestyle, and continue to practice various sports activities that the kids (and us adults) use as an essential outlet to support our mental and physical health: Basketball, Volleyball, Baseball, Gymnastics, Ninja Warrior, pickle ball, badminton. Our intention is to build the sport court underneath our existing deck footprint and build down as to not alter the essential character of our neighborhood.*
    - *The impact of physical activity on mental health is well established and cannot be understated. On a very personal note, our family, especially in the last few years, has been dealing with some serious grief/mental health challenges, due in part to the deaths of multiple immediate family members. Simply put, physical activity and taking care of our physical health is a fundamental part of our treatment and coping, and this sport court addition is absolutely critical to that effort.*

- **Conditions on the property that create a hardship that are not present on similar sized lots in the same area and zoning district; and**
    - *Many, if not most, similar sized homes and lots in our neighborhood and throughout the city are not as restrictive as ours in terms of the rear setback regulations, which for our home requires a 125 foot setback from the center road line of Bavaria road and our property. Unfortunately, due to this rear setback, there are no practical alternative locations, development concepts or reasonable space requirements that would reduce or eliminate this request. The location of the sport court addition we have proposed is the*

most practical and reasonable location to build our desired sport court and is the only one that wouldn't require a very significant and costly change to our existing house (such as full modification/movement of an exterior wall).

- **Relationships with abutting property that will not be adversely affected by the Variance.**
  - *Because we have chosen to build toward the back of our home and requesting a variance against the setback, we will be adhering to the setback requirements of the side of our home, thus, not adversely affecting our relationship or spacing with our abutting neighbors.*

- **Addressing the following items:**

  1. **The variance shall not impair the health, safety, comfort and general welfare of the public?**
  - *We are being mindful of the requested variance to build our sport court toward the back of our private back yard, building down and within the current design of our deck so as to not be a burden to our wonderful neighbors, whom we have a great relationship with and are committed to maintaining. With the proper construction and engineering plans, we do not foresee impairment of the health and safety of the public, especially since it will be built in our private backyard that is fenced in and not accessible to the public.*

  2. **The variance shall not be contrary to the intent and purpose of the Comprehensive Plan, Official Map or any ordinances of the City?**
  - *We are requesting a minor variance of 10-15' from the back of our home to add our sport court underneath our deck, which shall not be contrary to the intent and purpose of the Comprehensive Plan, Official Map or any of the ordinances of the city. It is designed to not take up any more space than is needed and will follow the current look and feel of our home and neighborhood.*

  3. **Variances shall not allow a use in a district that is not otherwise allowed?**
  - *The variance will allow us to build an indoor sport court for our family's use. We are not intending to use it in a manner that is otherwise not allowed.*

  4. **The variance should not be greater than necessary to accomplish the landowner's objective?**
  - *The variance will allow us to build a small indoor basketball court that will suffice as a gymnasium to be used by our family and neighborhood friends. It is similarly sized to other indoor sport courts in homes comparable to ours (for example, Robert Thomas homes in The Harvest, Chaska).*

  5. **Are there alternative locations, development concepts or space requirements that would reduce or eliminate the request?**
  - *There are no other practical alternative locations, development concepts or reasonable space requirements that would reduce or eliminate this request, particularly because the rearmost exterior wall of our home already sits in close proximity to this 125 foot setback. Building to the side would almost assuredly require us to request an additional variance to the side setbacks between us and abutting neighbors, would alter the character of our house, and may cause an eye sore to our neighbors/the public.*

  6. **The variance, if granted, would not alter the essential character of the locality (neighborhood)?**

- *We have constructed our plans so as to minimize the effect this variance might have on relationships with abutting properties and the character of our neighborhood. More specifically, we propose to build this sport court beneath our currently existing deck, and as a result we expect this addition to be barely noticeable, with little to no impact on the look and character of our neighborhood.*

7. Conforming to City Code, the property could not be put to a "reasonable" use?

- *Because we are in need of an alternative to gymnasiums and recreation centers due to the pandemic to remain active and healthy, especially during long Minnesota winters, we are not able to adequately use our home (as it is) to exercise and practice sports, which is a fundamental component of our health.*

8. The variance would improve an existing non-conforming condition.

- *We are not aware of any non-conforming conditions of our home.*

9. The variance will not impair an adequate supply of light and air to adjacent property, or substantially increase the congestion of the public streets, or increase the danger of fire, or endanger the public safety, or substantially diminish or impair property values within the neighborhood?

- *We have planned for our structure to be built down and underneath our deck as to not impair any supply of light and air to adjacent properties as well as dimmish or impair property values within the neighborhood; the construction will be barely noticeable. Because it would be built in our fenced private back yard, we will not be increasing any congestion to the public streets, increase fire danger or endanger public safety.*

This project has been critical to us for many years, so much so that we planned to build another home (including investing thousands of dollars to draw up plans) elsewhere just so we could get a sport court, however we were unable to move forward with those plans because of the exorbitant cost, but also because over that time our family has become even more deeply and sincerely emmeshed with our neighbors and neighborhood. After having moved and lived on both coasts then settling in the Twin Cities, for the first time, we feel like we have a home and a *community* in the Nickel Creek neighborhood of Chaska. Us adults and our children have made close bonds and friendships within this close-knit community. This addition would allow for our young children and their neighborhood friends to play and practice for years to come. We have much support from our neighbors, as they are excited to partake as well in using the addition (when everyone is healthy!), especially when there are few alternatives during the harsh winter months that are as conveniently located as our own home.

We appreciate your consideration of this request. Please let us know if we can provide any further information to facilitate your review.

Sincerely,

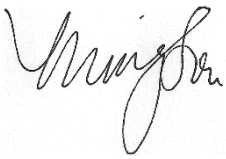

Nicole J. Son

Jimmy Son

1142 Rosemary Lane
Chaska, MN 55318

March 4, 2023

Carver County Board of Adjustment
600 E. 4th Street
Chaska, MN 55318

Dear Board of Adjustment Member:

We are requesting a variance for a reduced rear setback for our home at 1142 Rosemary Lane in Chaska, so that we can add an indoor sport court that will support the health of our young family.

The hardship we are encountering stems from the rear property line of our home, which borders Bavaria Road. According to our communication with the City, Bavaria Road falls under the "minor arterial in shoreland district" future functional class of road (as shown in the Roadway Systems Plan, Figure 4.13), which requires a 125 foot setback from centerline, per Carver County Code Section 152.034 Setbacks, Table D. Unfortunately, due to this rear setback, there are no practical alternative locations, development concepts or reasonable space requirements that would reduce or eliminate this request, particularly because the rearmost exterior wall of our home already sits in close proximity to this 125 foot setback. We are proposing a standard sized Sport Court, built such that it would extend approximately 105' from the centerline of Bavaria Road. We believe this 105' may fall within the provision for "Reduced setback" of "right-of-way plus 50 feet" outlined in Table D of 152.034. We have constructed our plans so as to minimize the effect this variance might have on relationships with abutting properties and the character of our neighborhood. More specifically, we propose to build this sport court beneath our currently existing deck, and as a result we expect this addition to be barely noticeable, with little to no impact on the look and character of our neighborhood.

The addition of a sport court to our home is needed in order to increase the health of our family, with the added benefit of providing a recreational area where we have the option of hosting our wonderful close community of neighbors. Conditions resulting from the Covid-19 pandemic have significantly decreased the physical and mental health of our family, due to decreases in physical activity and increased stress. This has further increased the importance of this sport court for our family, as we now spend much more time at home (both my husband and I now work from home almost exclusively), and we've faced increased challenges utilizing outside recreational/exercise facilities. Our three children range in age from 3 to 7, so this sport court will provide a much needed healthy outlet for fun and physical activity for the rest of their time at home, particularly during the winter months, which can be especially challenging with small kids. A fundamental requirement of a sport court for our family is the ability to play basketball, thus we have designed the size of the court to be a size reasonable for this use, and no greater.

We appreciate your consideration of this request. Please let us know if we can provide any further information to facilitate your review.

Sincerely,

Nicole J. Son

March 2, 2023

City of Chaska
One City Hall Plaza
Chaska, MN. 55318-1962

Re: Variance (Residential) – SUPPORT

Dear City of Chaska,

On behalf of the Son family, I, as an adjacent neighbor, would like to express support for granting the residential variance for their home addition.

We have spoken to the Son family to understand the construction plans for their addition and it does not pose risk, annoyance/disturbance to us. In-fact, the plans they have discussed with us seem to be the least intrusive of designs, which is much appreciated.

Your service, and dedication of your professional staff, are admired and much appreciated.

Sincerely,

Kevin Vickerman, Ph. D.
1138 Rosemary Ln.
Chaska, MN 55318

February 28, 2023

City of Chaska
One City Hall Plaza
Chaska, MN. 55318-1962

Re: Variance (Residential) – SUPPORT

Dear City of Chaska,

On behalf of the Son family the following neighbors and residents of the neighborhood of Nickel Creek would like to express support for granting the residential variance for their home addition.

We have spoken to the Son family to understand the construction plans for this addition. The residence is privately situated where the back of the house, and where the planned addition to be added will be, does not pose risk or disturbance to the rest of the neighborhood.

Your service, and dedication of your professional staff, are admired and much appreciated.

Sincerely,

Josh Lemoine	1182 Rosemary Ln	
Mike Hemer	1154 Rosemary Ln	
Chris Hrapsky	1177 Rosemary Ln.	
[illegible]	1176 Rosemary Ln	
Alexis McGuine	1181 Rosemary Lane	
Greg Larson	1157 Rosemary Lane	

EXISTING CONDITIONS

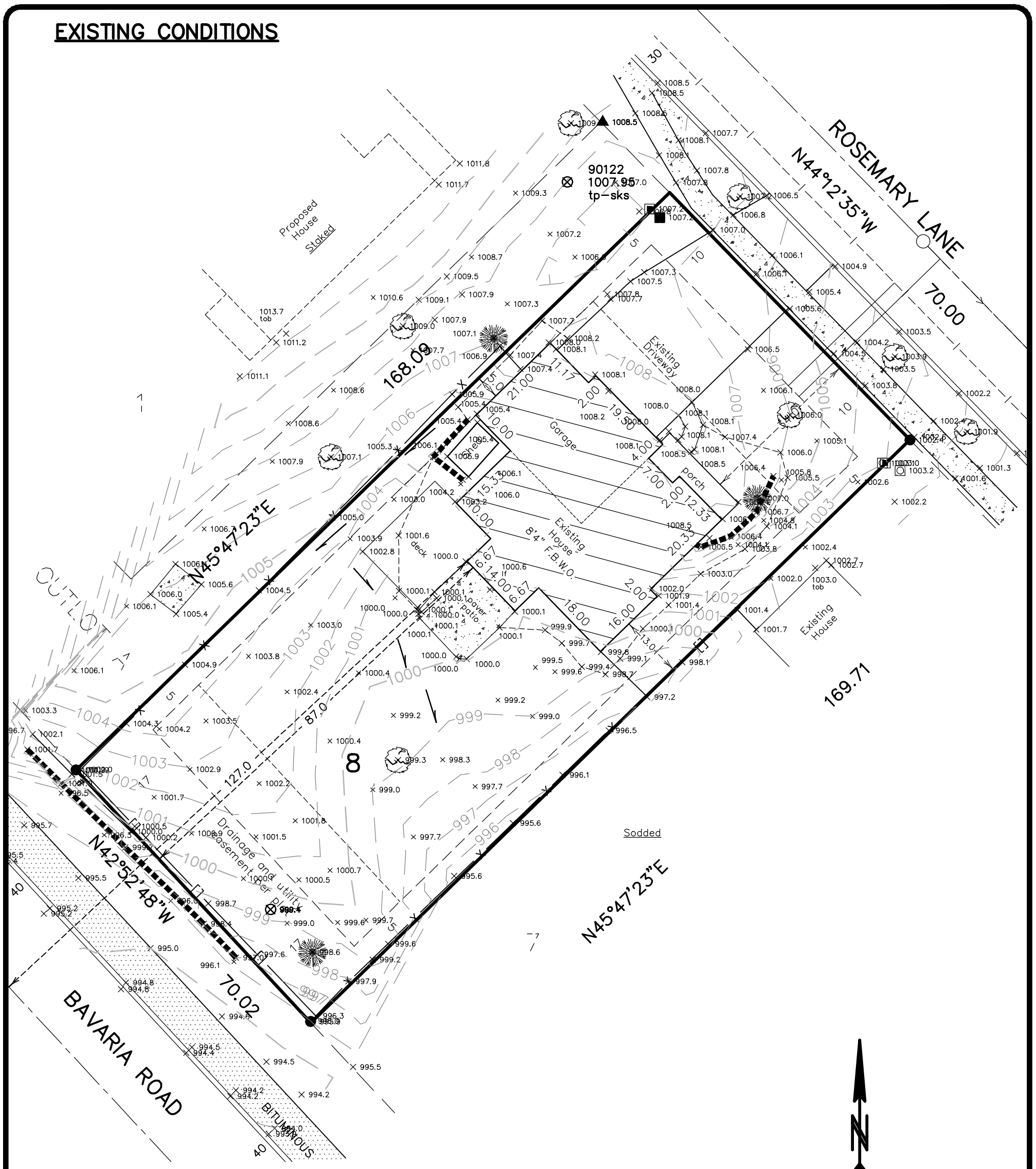

Denotes retaining wall designed and built by others.

Denotes existing tree C

Denotes existing tree D

Denotes service

Denotes television box

Denotes electric box

Denotes telephone box

X 000.00 Denotes existing elevation

(000.00) Denotes proposed elevation

Denotes drainage flow direction

Denotes spike

X Denotes fence (iron)

# Denotes fence (chain link)

[] Denotes fence (wood)

Service invert elevation 994.94 per plan by others

Lot area = 11823 SF
House area = 1814 SF
Porch area = 106 SF
Patio area = 33 SF
Driveway area = 900 SF
Total Impervious Area = 2853 SF
Impervious Coverage = 24.1%

Scale: 1" = 20'

We hereby certify to Key-Land Homes that this survey, plan or report was prepared by me or under my direct supervision, and that I am a duly licensed Land Surveyor under the laws of the State of Minnesota, dated 10/23/15.

Signed: Pioneer Engineering, P.A.

BY: _____

Peter J. Hawkinson, Professional Land Surveyor
Minnesota License No. 42299 email-phawkinson@pioneereng.com

Revisions:
1.) 10-26-15 Stake house
2.) client grade revisions

PIONEER engineering, P.A.
CIVIL ENGINEERS LAND PLANNERS LAND SURVEYORS LANDSCAPE ARCHITECTS

2422 Enterprise Drive
Mendota Heights, MN 55120

Ph. : (651) 681-1914
Fax: (651) 681-9488
www.pioneereng.com

Project # :123037000	Folder #: 7609	Drawn by: MTW

Lot 8, Block 1,
NICKEL CREEK FOURTH ADDITION
according to the recorded plat thereof
Carver County, Minnesota

Address: 1142 Rosemary Lane, Chaska, Minnesota
House Model: 3679-V Elevation: A
Buyer: Son

Property Exhibit for:
Corbins, LLC
8850 McColl Dr
Savage, MN 55378
Phone: (612) 297-3267

© Pioneer Engineering

PROPOSED CONDITIONS

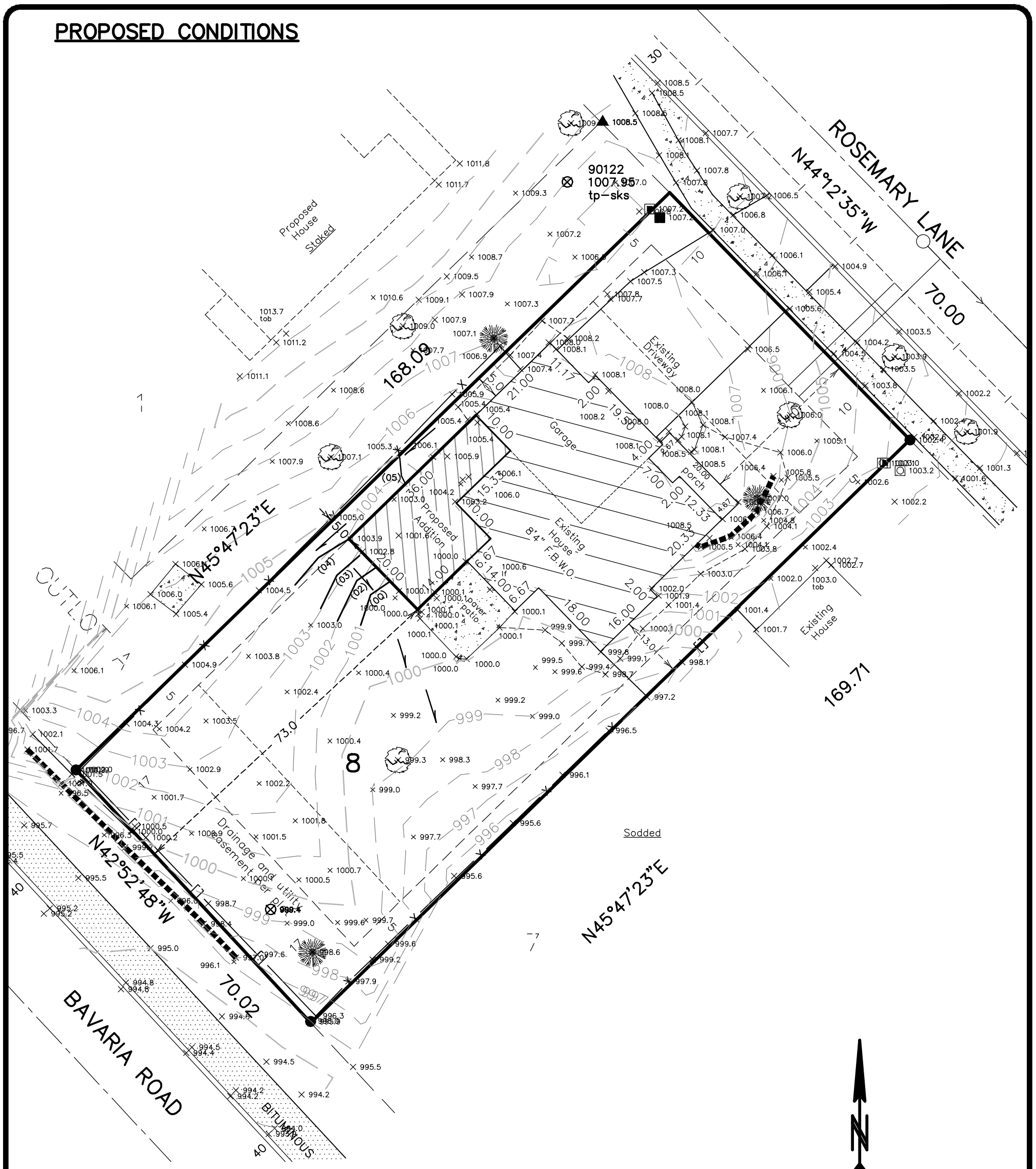

Denotes retaining wall designed and built by others.

Denotes existing tree C

Denotes existing tree D

Denotes service

Denotes television box

Denotes electric box

Denotes telephone box

X 000.00 Denotes existing elevation

(000.00) Denotes proposed elevation

Denotes drainage flow direction

Denotes spike

X Denotes fence (iron)

# Denotes fence (chain link)

[] Denotes fence (wood)

Service invert elevation 994.94 per plan by others

Lot area = 11823 SF
House area = 2381 SF
Porch area = 106 SF
Paver Patio area = 212 SF
Driveway area = 900 SF
Total Impervious Area = 3599 SF
Impervious Coverage = 30.4%

We hereby certify to Key-Land Homes that this survey, plan or report was prepared by me or under my direct supervision, and that I am a duly licensed Land Surveyor under the laws of the State of Minnesota, dated 10/23/15.

Signed: Pioneer Engineering, P.A.

BY: _____

Peter J. Hawkinson, Professional Land Surveyor
Minnesota License No. 42299 email-phawkinson@pioneereng.com

Revisions:
1.) 10-26-15 Stake house
2.) client grade revisions

PIONEER engineering, P.A.
CIVIL ENGINEERS LAND PLANNERS LAND SURVEYORS LANDSCAPE ARCHITECTS

2422 Enterprise Drive
Mendota Heights, MN 55120

Ph. : (651) 681-1914
Fax: (651) 681-9488
www.pioneereng.com

Project # :123037000	Folder #: 7609	Drawn by: MTW

Lot 8, Block 1,
NICKEL CREEK FOURTH ADDITION
according to the recorded plat thereof
Carver County, Minnesota

Address: 1142 Rosemary Lane, Chaska, Minnesota
House Model: 3679-V Elevation: A
Buyer: Son

Property Exhibit for:
Corbins, LLC
8850 McColl Dr
Savage, MN 55378
Phone: (612) 297-3267

© Pioneer Engineering

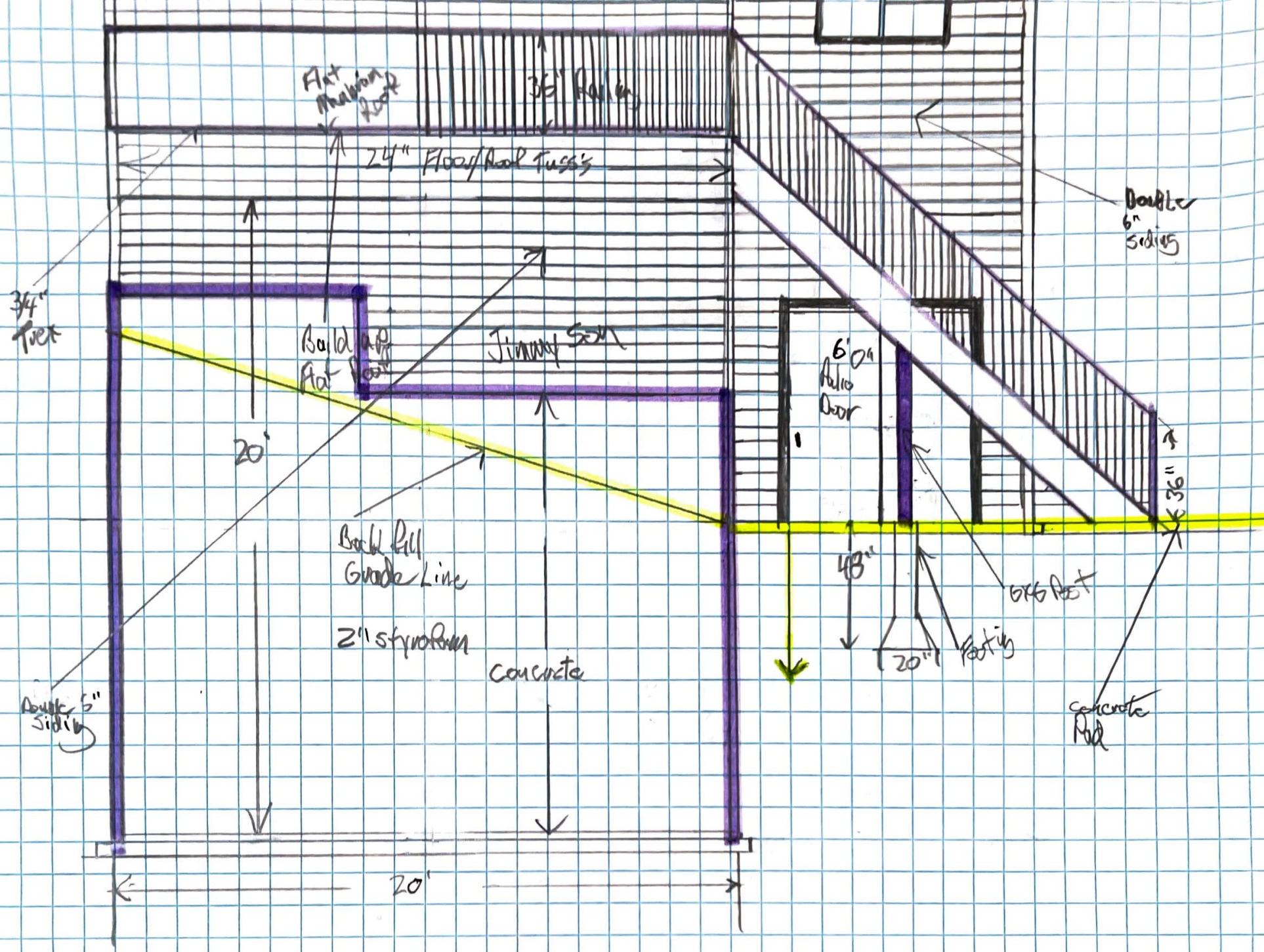
Flat Mansion Roof
36" Rafters
24" Floor/Roof Truss's
Double 6" Siding
34" Tiers
Build up Flat Roof
Jimmy Sam
6'0" Patio Door
20'
36"
Back fill Grade Line
48"
6x6 Post
2" styrofoam
Footing
20"
concrete
Double 5" Siding
concrete Pad
20'

2x12 stringers 12" O.C.

2x2 Brackets 4" O.C.

West Bay Rail 36"

Vinyl Siding To Match House

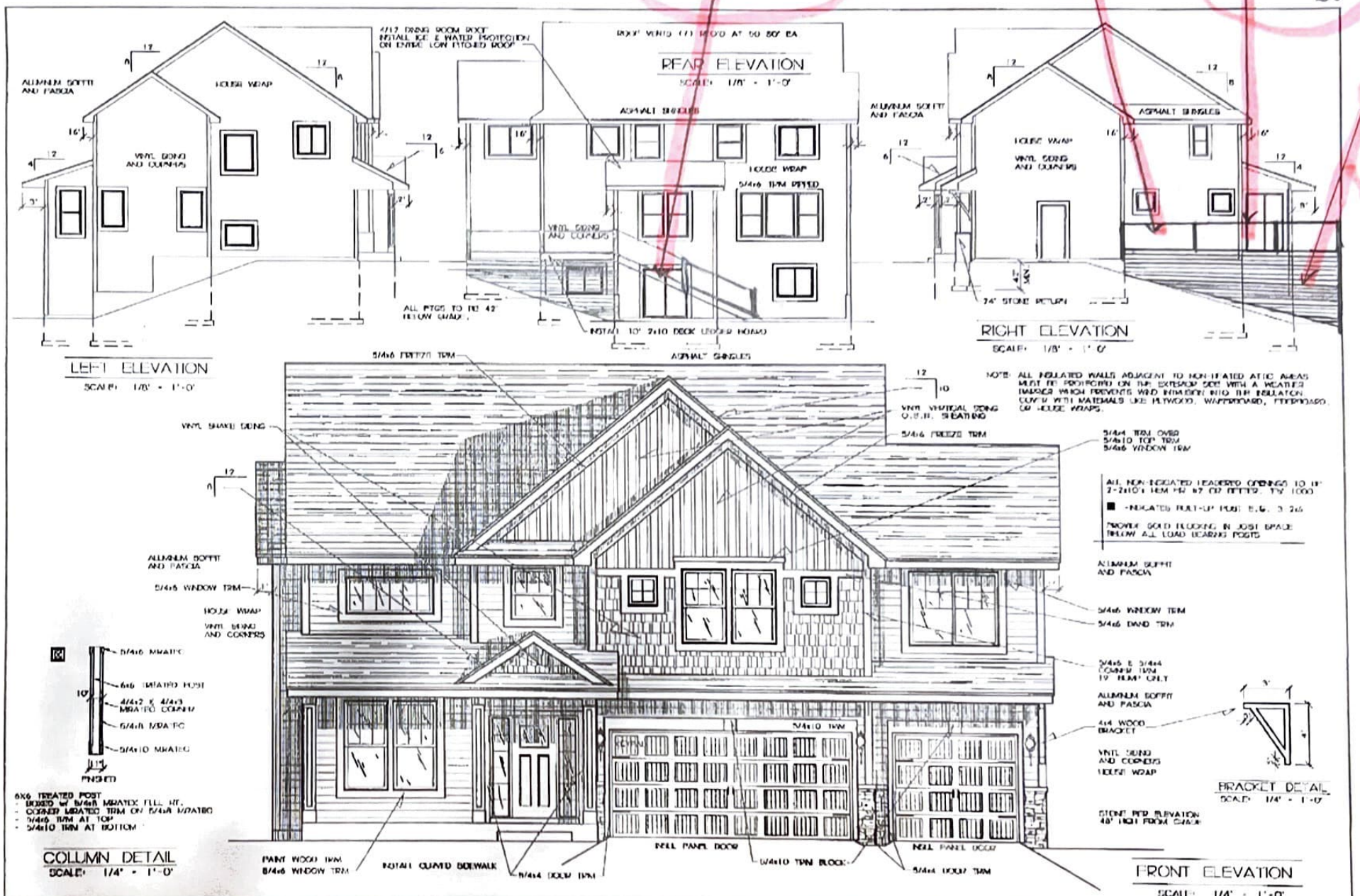

THESE PLANS AND PRINTS REMAIN THE EXCLUSIVE CONFIDENTIAL PROPERTY OF THE OWNER, AND MAY BE USED BY OTHERS ONLY FOR THE PURPOSES SPECIFICALLY AUTHORIZED BY THE OWNER.

UNAUTHORIZED COPYING OR REPRODUCTION OF ANY PORTION IS FORBIDDEN.

© COPYRIGHT 2008 BY KEYLAND HOMES
DESIGNER: ERIK J. CHRISTENSON

NOTE: ELEVATION DRAWINGS ARE FOR ILLUSTRATION PURPOSES ONLY. THEY ILLUSTRATE OUR STANDARD HOME ON A TYPICAL LOT. EXACT ELEVATION OF THE HOME TO BE CONSTRUCTED ON YOUR LOT WILL VARY DEPENDING UPON MANY FACTORS. SOME OF THE FACTORS THAT COMMONLY WILL AFFECT ELEVATION ARE THE TOPOGRAPHY OF THE LOT, THE MASTER GRADING PLAN FOR THE SUBDIVISION, NUMBER OF COURSES OF BLOCK IN BASEMENT, TYPE OF FLOOR JOISTS, HEIGHT OF FIRST FLOOR CEILING, ETC.

HOME FOR JIMMY & NIKKI BON

DRAWN BY	OCTOBER 21,	REVISED:	ELEVATION	PLAN #
STEVE	2016	11-13-15	A	3679-V

JOB ADDRESS
1142 ROSEMARY LN
CHASKA

KEYLAND HOMES

SHEET 1/6

REQUEST FOR ACTION
CHASKA PLANNING COMMISSION
04/12/23

Subject: **Ess Lot & Ernst Home (Chaska Yards) – Preliminary Site & Building Plan, Preliminary Plat, Zoning Ordinance Amendment (ZOA), and Variance**

Applicant: Carvery County CDA

Location: 217 Walnut Street and 211 Walnut Street

Case No.: 2023-01

Synopsis: Applicant seeks to obtain approval of a preliminary plan to construct 3 new housing units on 217 Walnut Street and rehab the Ernst Home for a total of 4 owner-occupied units

Prepared By: Elizabeth Hanson

Staff Recommendation: Motion to recommend approval

BACKGROUND

In the middle of 2014, the City approved and invested in the relocation of the Riedele House (Ernst House) from the Firemen's Park lot to the empty lot at 211 Walnut Street to help aid in the redevelopment efforts of Firemen's Park and preserve the historic home. The home has since been relocated and has been sitting vacant on this lot for some time.

In late 2014, a fire caused major damage to the Ess House at 217 Walnut Street, which is on the lot just north of the Ernst House. In 2015, the City stepped in to purchase it, with the express goal of saving the building. The City went through two grant cycles (2015 & 2016) with the State Historic Preservation Office (SHPO) in hopes of obtaining significant funds to help save the home. The City was unsuccessful in both of these grant applications and thus had no other option but to demolish the home, which was done in 2017.

In December 2018, a Concept Plan was approved for 7 residential rental units by Talle & Associates, Inc. In June 2019, a Preliminary Site & Building Plan, Preliminary Plat, and Rezoning (PRD-74) was approved for the same project. The project did not move forward from Preliminary approval, citing financing issues.

The City currently owns both parcels. The City has been marketing the Ess lot and Ernst Home for redevelopment so that the Ess lot can be built on and the Ernst House can be rehabbed.

In January 2022, Carver County CDA proposed a Concept Plan for a 4-unit owner-occupied project. The project consisted of 3 new housing units, and the rehabilitation of the Ernst House. The project was reviewed at the City's HPC meeting on January 4, 2022 and comments were received; a formal approval was not done at this time. The project was also reviewed and recommended approval by the Planning Commission (January 12, 2022) and ultimately approved by the City Council (January 24, 2022).

In February 2023, the preliminary plan was first reviewed by the Planning Commission. It was noted at the Planning Commission meeting that the applicant wished to split the site into separate lots for each unit, however, did not have a plat showing this at the time. They opted to withdraw their preliminary application, prior to City Council, so that they could work on the preliminary plat for the site. They also wanted to work on a solution that would eliminate the need for an HOA as the CDA did not want or could sustain the management of such. Tonight we are looking at a revised preliminary plat drawing that shows separate lots for each unit, plus the re-reviewal of the preliminary site & building plan, zoning ordinance amendment (ZOA) and a variance request to deviate from setbacks.

Changes Since Initial Preliminary Submittal
The following are changes that have occurred on the plans since the initial preliminary review in February 2023:

- **Lots**; the preliminary plat shows the creation of 5 separate lots:
    - 1 lot for each housing unit (4 total), and their respective garage and surface stall units
    - 1 lot for the City owned parking lot south of the Ess & Ernst sites
- **Common Areas Eliminated**; the common areas shown before (courtyard, shared gardens and yard games) have been eliminated. These areas have been transformed into private yard areas for each of the units. The reason to eliminate the common areas was due to the CDA not wanting to have an HOA on the site. Having an HOA would require more management on the CDA's end, which they feel they don't have adequate resources to do.
- **Fencing**; the fencing on the north side has been reoriented to go up to the north property line; this change was done to address a comment received at Planning Commission about providing sufficient yard space for Unit 2. As noted above, the elimination of the common areas also resulted in more yard space for each unit. There may be a minor change to the orientation of the fencing so that electric crews can access the utilities that exist on the north side. These changes will be reflected in the final plans.
- **Landscaping**; coniferous landscaping has been added to the north property line between Units 1 & 2 in response to a comment received at Planning Commission. Staff would argue that this coniferous layer be extended into Unit 3's yard to help screen the loading area of Von Hanson's.
- **Detached Garage**; the detached garage was slightly increased in size to include additional indoor storage.
- **Decks & Side Entrances**; Units 2 & 3 had their attached decks reoriented to the side of the homes so that yard access was more efficient. Unit 1 has also included a side entrance so that there is direct access to their yard.

PROJECT GOALS
The developer has identified the following goals below for this project:

- Build on the historic fabric of Downtown Chaska
- Provide high quality open spaces for residents
- Add high-quality housing to the town center to create new walkable housing option for residents

- Contribute to the historic preservation of the city's architectural heritage

CURRENT PROPOSAL

The applicant, Carver County CDA, is requesting approval of a Preliminary Site & Building Plan, Preliminary Plat, Zoning Ordinance Amendment (ZOA) to PRD-74, and Variance from the PRD Building Setbacks (Section 15.16.020.F.1) to (211 and 217 Walnut Street) incorporate four residential owner-occupied units: one unit in the renovated Ernst House with a private patio area, three new individual housing units with private yards, and a new detached garage. One garage and one surface parking space will be provided for each housing unit. These units will be brought into the Carver County Community Land Trust and sold as affordable housing units at 80% Area Median Income (AMI). Also included in the preliminary plan is the existing City-owned parking lot to the south of this site.

ADHERENCE WITH SECTION 15.16.020.F PLANNED RESIDENTIAL DEVELOPMENT DISTRICT DEVELOPMENT STANDARDS

- **Building Setbacks.** *Building setbacks from all property lines which form the perimeter of the total property in the PRD or from all exterior dedicated street right-of-way lines shall be at least 30 feet or the height of the building, whichever is greater. Minimum spacing between principal buildings shall be 25 feet.*
    - **Proposed: Building heights are lower than 30 feet, so 30 feet would apply for perimeter setbacks; the nearest setback to the property line which forms the perimeter of the total property is 7 feet 8 inches.**
    - **Proposed: The minimum spacing between the proposed buildings is 8 feet.**
    - ***Variance from Section 15.16.020.F.1 will be required***
- **Lot Coverage.** *The total ground area occupied by buildings in a PRD shall not exceed 20 percent of the total site area in the project. If the total project is to be staged over a period of time, open space shall be provided so that the ground coverage of any one stage shall not exceed 30 percent of the applicable site.*
    - **Proposed: 17.7% (4,567 square foot building divided by 25,775 square foot total site area)**
- **Floor Area Ratio (FAR).** *There shall be a maximum floor area ratio of 0.5. Floor area ratio shall be determined by dividing the sum total of the building floor area by the gross area of the total site.*
    - **Proposed: 0.32 (8,339 square foot floor area divided by 25,775 square foot gross area of the total site area)**

Adjacent properties

The site is bound on the north by commercial, to the west by an alleyway and commercial, the south by a city-owned parking lot, a residential building and commercial businesses, and the east by Walnut Street and residential.

Existing Conditions

The Ess lot (0.2 acres) and Ernst Home lot (0.2 acres) together are 0.4 acres in total. The Ess lot is currently vacant and used to house the Joseph Ess House. In 2014 a fire caused significant damage to the home and it was subsequently demolished in 2017. The Ernst Home was originally located on the Firemen's Park lot but was subsequently relocated to 211 Walnut

Street to aid in the redevelopment of the park. It has been sitting vacant on 211 Walnut Street since 2015. The City owned parking lot (0.2 acres) currently accesses off Walnut Street and the mid-block alley, and will remain as is.

Land Use

The two lots and City-owned parking lot are currently in the Planned Residential Development (PRD-74) zoning district, which was put in place with the previous Talle & Associates, Inc. project. This zoning district allows for multi-family residential, however, will be amended to reflect the new use and layout.

Layout/Transportation/Sidewalks

The new houses are organized around a small central open space. The ownership of this open space is shared by each of the new units. Both the new housing and the Ernst House will also have private yards, separated by low fences, to clearly define spaces that are for personal use. These yards will have room for small patios and amenities like grilles, tables, and chairs.

The site has a central walkway that connects the proposed Paseo to Walnut Street and provides access to all the units, including the Ernst House. At the east end, an entrance wall, steps, and landscaping will help define the sense of entry to the site and provide a small bank of locked boxes for mail delivery. At the west end, a walkway provides access to the garages and the garbage/recycling bins for residents.

Currently, the available vehicle access points for the property are in the rear from the alleyway via a small parking area; there is a detached garage also situated near the rear of the property that will provide an interior stall for each housing unit. The alleyway gains access from 3rd Street East, and from the City-owned parking lot to the south, however the 3rd street access will eventually be relocated to the parking lot just west of it when the paseo goes in.

Paseo

It should be noted that as a part of the Downtown Master Plan, the paseo concept was mentioned as a part of the alleyway in the rear of these lots. Specifically, *"Main Street" will be complemented by attractive "Town Center" cross-streets, as well as the Brick City Paseo paralleling it to the east and west.* The paseo concept was a plan to mitigate noise, buffer and provide a beautiful walk for pedestrians. The alleyway behind the businesses fronting Highway 41 was targeted as a paseo opportunity to give pedestrians an alternative versus walking down the busy highway. The paseo is planned to undergo implementation with the Highway 41 project happening this summer, however most of the work in this area is planned for 2024. A portion of that paseo design is included on the next page.

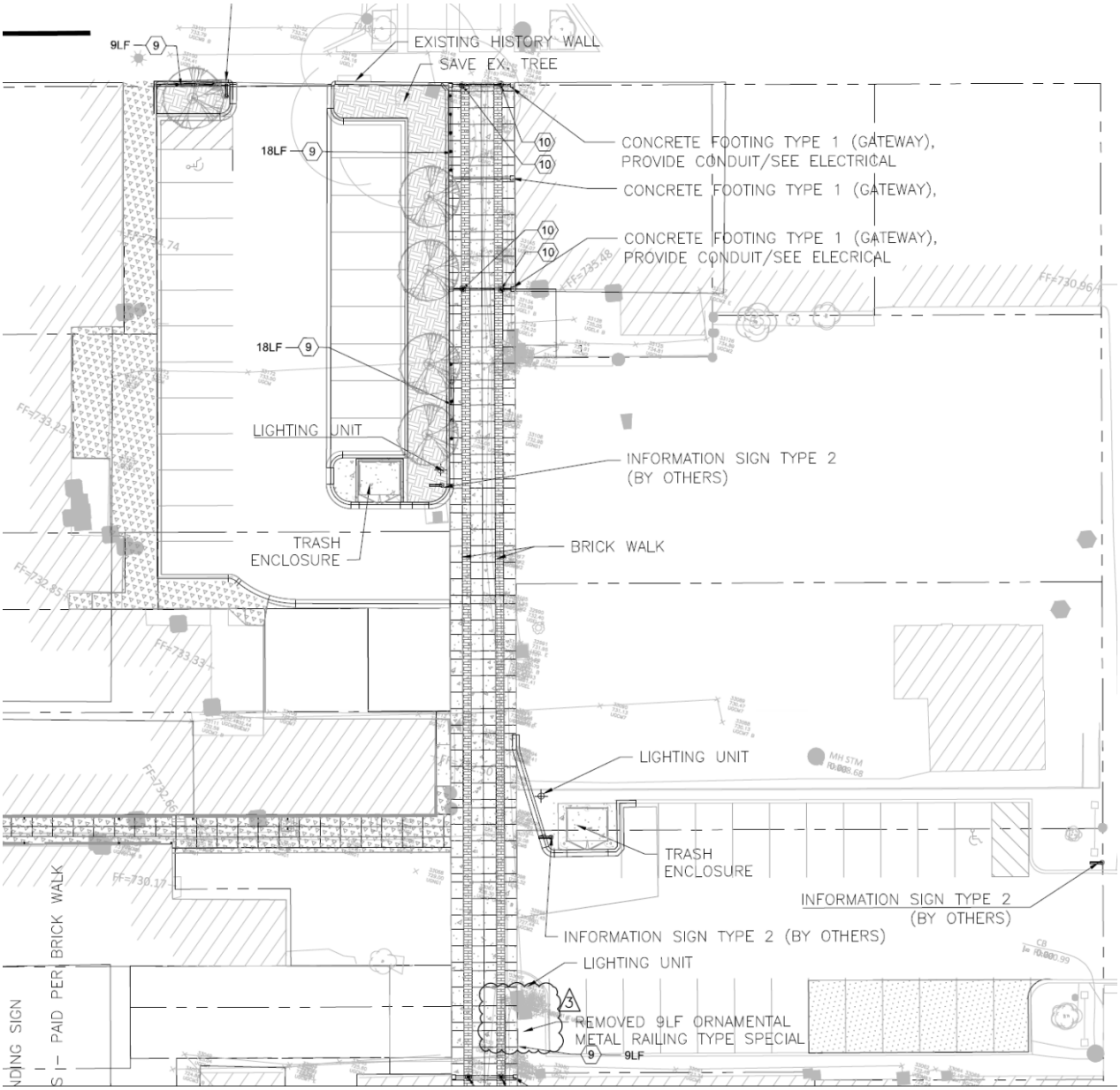

(Paseo design between 2nd Street E and 3rd Street E)

Because of this paseo concept, it will be important that the west side of this lot, which abuts the paseo, shows an appropriate edge. Currently the site plan is showing a landscaped edge on the west side, north of the pedestrian connection and parking area. The landscaping would include a mix of ornamental trees and shrubs. The private yard space adjacent to the paseo will include a decorative fence style for added interest. In addition, the detached garage facing the paseo will incorporate decorative garage doors. Additionally, it will be important that the applicant and City continue to coordinate between the paseo and Chaska Yards project edge so that grades match up adequately.

Utilities

Sewer and water utilities are available to serve the site.

Setbacks
The setbacks are defined by PRD-74. Namely, the front yard setback (east) is 10 feet. The rear yard setback shall be 20 feet. The side yard setback is 5 feet. Parking setbacks are 3 feet from property lines.

The project proposes to amend the current PRD-74 so the south property line setback is 3 feet, the north property line setback is 7 feet, and interior property line setbacks are 2 feet. The rear yard and front yard setbacks will remain the same. The reason the south property line setback has to change is due to the fact that the City has to move the south lot line so that the southern retaining wall is within City ownership. Fundamentally speaking, the location of the buildings and parking have not changed since February 2023, just the lot line.

As noted earlier in this report, the general PRD development standards require a 30 foot perimeter setback and a 25 foot building separation. A variance is being requested to deviate from these standards.

Architecture
The architecture of the new construction will be very important for this project as it is a site that is located in downtown Chaska and also a national district (Walnut Street Historic District).

<u>Ernst Home</u>
The Ernst Home will be relatively unchanged on the front and side exteriors with the exception of maintenance work that is greatly needed. The rear is proposing to include a one-story back entrance enclosed porch. The Historic Ernst Home that was moved to this site will be restored back to a single-family house. Currently the house has interior modifications that converted it to a commercial office structure and a rental unit on the second floor. These recent modifications will be removed and reconfigured to become a historic 3-bedroom house. The following are proposed maintenance work and changes on the home:

- The brick will be repaired, with appropriate mortar being installed and bricks chosen to match where they need to be replaced.
- The columns, cornice, dentils, balusters, and railings will be repaired where possible. Where elements are missing or too deteriorated for reuse, the historic elements will be used to fabricate replica pieces.
    - The porch roof is in severely deteriorated condition, it is expected that structural elements will be replaced, however, the configuration and trim will be matched.
    - The door that leads to the porch roof will be removed and replaced with a window. Looking at historic images it appears this was originally a window, later modified into a door. Due to safety concerns and, the need to add a code compliant guardrail in addition to the historic railing, access to this deck will be removed. Matching brick will be toothed in to fill the lower portion of the door opening.
- A back entrance was once installed on the house, however only the flashing from the roofing is the only indication of the historic configuration. No photos were found. A small back entrance porch will be added that compliments the details of the historic house.
- Historic windows will be repaired.

- More recent windows will be replaced with new windows to match the historic configuration.
- Exterior trim will be repaired.
- The interior will be reconfigured with new finishes/fixtures for a family.
- The design will maximize the retention of historic materials/configuration/finishes as part of the project.

New Housing Units

The new units are designed to be "respectful" to the historic Ernst Home. These units will be gabled roof units with lap siding (fiber cement). Brick is not used on these new buildings in order to keep costs down as well as not create a false sense of history. The new units will have two different floor plans, but their orientations shifted around the central open space. Unit 1 will be a two-story structure due to the more level grade along Walnut Street. Unit 1 also has a more formal entrance to the east to connect with the historic district along Walnut. Units 2 and 3 use the same plan, a modified split-level. These split-level plans take advantage of the sloped site along the north and west, providing entrances as the houses are set into the slope. But more importantly, the split level allows for compatibility with the Ernst house, so the height of the new structures on the higher areas of the lot do not dominate, but rather acts in concert with the historic house.

The exterior details will include:

- 4" lap siding.
- Simple, enlarged trim, including horizontal banding to break up the vertical dimension of the new units.
- Simple, built-up trim for the doors and windows, to create visual interest and shadow lines.
- Balustrades and railings with simple turned and routed shapes to create shadow lines and elements of decoration at the entrances.

The applicant states that the goal is to add interest and detail while not trying to replicate or create a false sense of historic detailing for the new units. They also want to avoid adding details that will create undue expense for the affordable units and potential long-term expense as the future homeowners maintain the property.

The floor plans will include:

- Two bedrooms, a shared bathroom, laundry, storage, and mechanical on the lower levels.
- A mid-level entrance out to the commons.
- A master bedroom/bathroom, kitchen, dining, living, guest powder room.
- The upper level will have vaulted ceilings over the stairs, kitchen, living, and dining areas.
- A multitude of storage spaces at the entries, in the living areas, bedrooms, and above the master bedroom under the pitched roof.

New Detached Garage

There is a detached garage proposed in the rear of the property that will house 4 parking stalls, plus 4 surface stalls. The garage is placed in the southwest corner of the site. This service

structure has a flat roof. The design of the structure includes the following as stated by the applicant:

- It fits into the context of downtown and is not precedence setting. Please see the attached map in the narrative:
    - Unlike other residential areas in the historic district, this is a unique site that shares an alley and block with commercial structures. This is very similar to the other facing block on Chestnut. Both blocks are noted in green on the map. It has a similar configuration of where a few residential structures back up to a block dominated by flat roof main street buildings. On both blocks the residential structures have pitched roofs and most of the other structures have flat roofs. In fact, the other block has no garages, we assume they park on the street. We feel the flat roof garage is appropriate in this context and differentiation of use as it already exists on another block downtown.
    - Also on the map, there are other structures in the historic district that have flat roof additions to their historic pitched roof structures. These are noted in blue.
    - There are two, including one that is a historic designated house, that has a flat roof garage. These are noted with a red circle.
- Another reason for the flat roof is because this garage is at the high point of the site; storm water control is critical. Instead of pitching more water into the alley, the flat roof directs stormwater much more efficiently by being able to go directly into the new storm water utilities on the site.
- A pitched roof would make the garage taller on this high/visually exposed point of the site. The intention is to reduce the scale of this utilitarian building on the site.
- Lastly, the flat roof provides an area for solar panels to deliver renewable energy to affordable housing units.

The HPC commented in February 2023 about the flat roof design. They concluded that the flat roof design is amenable and appropriate for the site. SHPO has also echoed these comments.

The elevation drawings for the new housing units have improved since Concept Plan. The design of the new units are more compatible with the Ernst Home in the following ways:

- Window openings are similar in scale and profiles
- The lap siding used will provide cohesiveness with other downtown residential properties and not overpower the Ernst Home's Chaska brick design
- Front porch/side decks will be included to bring a nod to the Ernst Home's front porch layout
- Trim detailing in the cornice, corners, mid-sections and on the windows will provide added interest and tie in historic elements

The color of the new units will be a dark gray color with white trim. The white trim will match the details of the Ernst Home well. The dark gray will significantly contrast with the Chaska brick, however, staff wonders if the color can still contrast but be more compatible. Staff would ask the applicant to explore lighter color options that provide contrast but are more cohesive to the surrounding area.

Landscaping & Fencing
The table below indicates the landscaping requirements for this site:

LANDSCAPING REQUIREMENTS & PROPOSED		
	Required	**Proposed**
Overstory Trees	22.25 caliper inches (9 trees)	62.5 caliper inches (21 trees)
Understory Trees	3	7
Shrubs	24	34

Landscaping meets the landscaping requirements for the site. A surplus of overstory and shrubs will be incorporated on the site to enhance the edges and communal areas. In sum, the landscaping proves to be acceptable. Since February 2023, the applicant has added 16 coniferous trees to the north property line in response to Planning Commission feedback received in February. Staff would advise that additional coniferous trees be added to the north side of Unit 3 to help screen the Von Hanson's loading area.

It should be noted that there are existing boulevard trees along Walnut Street. In the event that these trees are damaged or removed from construction of this site, they will need to be replaced.

In addition to landscaping, the housing units will have fencing to delineate the private yard spaces. The fence designs proposed will be a 4 foot decorative style fence. This type of fencing will also aid in enhancing some of the edges of the site, including the west edge facing the paseo. The fencing shown on Unit 1 shall be pulled back to the side elevation. This comment is also echoed by SHPO in their March 2023 letter.

Parking
The parking proposed will provide two parking spaces for each unit (one parking garage stall and one surface parking stall). In total, there will be 8 on-site parking stalls for 4 dwelling units. Staff finds that this meets the parking requirements for this type and size of use. Additional on-street parking is provided in front of the buildings.

Lighting
Lighting is shown in the form of wall packs and bollards. Wall packs are shown at the doors of each unit. Bollards will be used to illuminate the east-west connection from the paseo to Walnut Street. All lighting must meet the City's zoning ordinance section 15.28.250.

Shared Agreement
Ingress and egress for all units will be reserved through an access easement against the property, as well as deed covenant. The deed covenant would also require the owners to maintain the sidewalks, and driveways.

Preliminary Plat
The project is pursuing preliminary plat at this time. The preliminary plat shows the following lot layout:

- **Lot 1, Block 1**: Unit 1 house, yard, garage stall and surface stall (although this lot is non-contiguous, the County can place these "lots" in one PID)
- **Lot 2, Block 1**: Unit 2 house, yard, garage stall and surface stall (although this lot is non-contiguous, the County can place these "lots" in one PID)
- **Lot 3, Block 1**: Unit 3 house, yard, garage stall and surface stall
- **Lot 4, Block 1**: Unit 4 house, yard, garage stall and surface stall
- **Lot 5, Block 1**: City owned parking lot

Currently the existing Ernst House lot is showing to encroach into the City-owned parking lot to the south. The plat will correct this encroachment by pulling back the south lot line of Lot 4 to the north edge of the retaining wall. The City will own and maintain the south retaining wall. There are no outlots proposed.

Zoning Ordinance Amendment (ZOA)
The project is proposing to amend the PRD-74 zoning district, which is the current zoning for the property. As noted in the background of this report, the PRD-74 zoning was put in place with the former Talle & Associates project (Ernst Home Apartments). In that regard, the zoning reflects an old plan and thus will be updated to reflect what's currently proposed. The following are proposed changes to the ordinance:

- Update the approving graphic exhibits to reflect the current project
- Include updated setbacks for the north, south and interior property lines for buildings and parking
- Include building separation

Please note the changes that are being sought in the PRD-74 ordinance are to reflect the new preliminary plat layout. The locations of buildings and parking are not fundamentally changing from February 2023 when this was first reviewed, rather just the orientation of proposed lot lines.

Variance to Section 15.16.020.F.1 (PRD Building Setbacks)

Variance Facts
In order for a variance to be granted, the applicant must provide a written statement containing the following:

- Conditions that create a hardship, *or practical difficulty,* (see definition below) that would prohibit reasonable development without a Variance;
- Conditions on the property that create a hardship, *or practical difficulty*, that are not present on similar sized lots in the same area and zoning district; and
- Relationships with abutting property that will not be adversely affected by the Variance.

Minnesota State Statue in Chapter 462.357, Subdivision 6, (2), defines the following: "Variances shall only be permitted when they are in harmony with the general purposes and intent of the ordinance and when the variances are consistent with the comprehensive plan. Variances may be granted when the applicant for the variance establishes that there are practical difficulties in complying with the zoning ordinance. "Practical difficulties," as used in connection with the

granting of a variance, means that the property owner proposes to use the property in a reasonable manner not permitted by the zoning ordinance; the plight of the landowner is due to circumstances unique to the property not created by the landowner; and the variance, if granted, will not alter the essential character of the locality. Economic considerations alone do not constitute practical difficulties. Practical difficulties include, but are not limited to, inadequate access to direct sunlight for solar energy systems."
The general standards for approval of a variance are found in Section 15.08.080, of the Zoning Ordinance, which states the following:

"The City Council may grant variances from the literal provisions of this Ordinance where their strict enforcement would cause undue hardship because of circumstances unique to the individual property under consideration, and to grant such variances only when it is demonstrated that such actions will be in keeping with the spirit and intent of this Ordinance.

"Undue hardship" (*aka Practical Difficulties per state statute*) as used in connection with the granting of a variance means the property in question cannot be put to a reasonable use if used under conditions required by the official controls, the plight of the landowner is due to circumstances unique to his property not created by the landowner, and the variance, if granted, will not alter the essential character of the locality. Undue hardship also includes, but is not limited to, inadequate access to direct sunlight for solar energy systems.

Economic considerations alone shall not constitute an undue hardship if reasonable use for the property exists under the terms of this Ordinance. Variances shall be granted for earth-sheltered construction as defined herein when in harmony with this Ordinance.

The City Council may not permit as a variance any use that is not permitted under the Ordinance for property in the district where the affected person's land is located. The City Council may permit as a variance the temporary use of a one family dwelling as a two family dwelling. The City Council may impose conditions in the granting of a variance to insure compliance and to protect adjacent properties."

The following are some of the questions Staff asks with each variance request.

- The variance shall not impair the health, safety, comfort and general welfare of the public?
- The variance shall not be contrary to the intent and purpose of the Comprehensive Plan, Official Map or any ordinances of the City?
- Variances shall not allow a use in a district that is not otherwise allowed?
- The variance should not be greater than necessary to accomplish the landowner's objective?
- Are there alternative locations, development concepts or space requirements that would reduce or eliminate the request?
- The variance, if granted, would not alter the essential character of the locality (neighborhood)?
- Conforming to City Code, the property could not be put to a "reasonable" use?
- The variance would improve an existing non-conforming condition.
- The variance will not impair an adequate supply of light and air to adjacent property, or substantially increase the congestion of the public streets, or increase the danger of fire,

or endanger the public safety, or substantially diminish or impair property values within the neighborhood?

Details of Variance Request

The applicant is requesting a variance from zoning section 15.28.120.F.1. which relates to Building Setbacks and Building Separation on PRD sites. The code states as follows: *Building setbacks from all property lines which form the perimeter of the total property in the PRD or from all exterior dedicated street right-of-way lines shall be at least 30 feet or the height of the building, whichever is greater. Minimum spacing between principal buildings shall be 25 feet.* Based on this code section, the subject property would need to provide a 30 foot setback from the perimeter of the PRD area, which includes the City owned parking lot site. The site plan shows the lowest perimeter setback of 7 feet 8 inches on the north perimeter property line, 12.5 feet on the east perimeter property line, 20 feet on the west perimeter property line, and over 70 feet from the south perimeter property line. In addition, the minimum building spacing proposed is 8 feet. Therefore, a variance will need to be obtained from zoning section 15.28.120.F.1 for building setbacks and building separation.

Applicant Statement

The property owner states that the practical difficulty lies in the fact that placing PRD requirements on these small lots makes their development extremely difficult. By looking at the exhibit on the next page, one can see that the building setbacks and separation applied would only make it feasible for one unit to locate on the property. It would also negate the allowance for a detached structure. The density of these lots following PRD requirements creates less density than historically existed on this site with homes and outbuildings. Doing so, would create a negative impact on the integrity of the National Walnut Street Historic District. The PRD setbacks and building separation are also contrary to the layout and configuration of other downtown lots in the area. The variance request will not alter the essential character of the locality, rather adhering strictly to code will alter the character of the locality in a negative way. By allowing a variance to the Building Setback and Building Separation, the plan will better integrate into the neighborhood and better follow the historic configuration of these lots, which is important for the integrity of the national historic district. In addition, the variance request:

- Will not impair the health, safety, comfort and general welfare of the public in this area. The density and configuration proposed is typical for this area of Chaska.
- Will not be contrary to the intent and purpose of the Comprehensive Plan, Official Map or any ordinances of the City as the proposal only reinforces the Comprehensive Plan's zoning density and planning for this area.
- Will not alter the essential character of the neighborhood as denser lots were historically developed here.
- Will not impair an adequate supply of light and air to adjacent property. The new units are low and the adjacent properties to the north have few windows. The windows that do exist will not be blocked as the units will be set back from these walls.
- Will provide the required number of off-street parking as required by code and not increase parking congestion on the streets or public parking lots.
- Will most likely increase the property values on the neighborhood as the current lot is vacant with a vacant historic structure that needs significant repair.

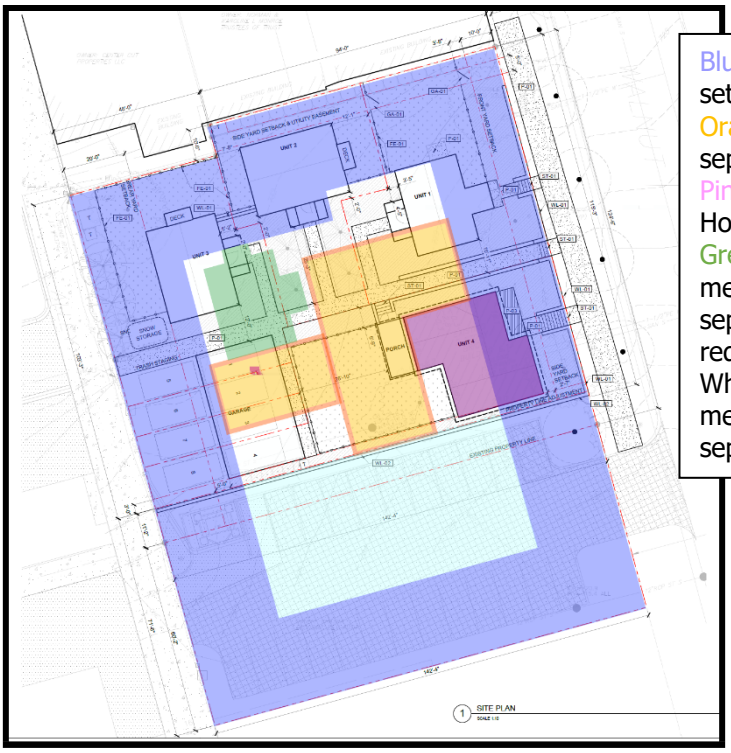

Blue: 30ft perimeter setback
Orange: 25ft building separation
Pink: existing Ernst House
Green: new unit meeting setback and separation requirements
White: buildable area meeting setbacks and separation

<u>Variance Standards and Staff Analysis</u>

<u>Finding 1</u>. *Conditions that create a hardship, or practical difficulty, that would prohibit reasonable development without a Variance;*

The request to deviate from the building setbacks and building separation is due to the difficulty and unreasonableness of meeting such requirements. As shown above, the site would not achieve a layout and density that is common in downtown Chaska if the setbacks and building separation were strictly applied. The historic Ernst Home that sits on the property, has essentially established the limited layout of the PRD setback and building separation requirements. The Ernst Home was a part of a greater community initiative to redevelop Firemen's Park. The Ernst Home was relocated from the Firemen's Park area and situated in downtown to help facilitate this redevelopment project while also preserving the important history that the Ernst Home encompasses, and provide a positive contribution to the National Walnut Street Historic District. The location of the Ernst Home mimicked the location of the former home that existed on its parcel before it was demolished, which was also important to maintain the streetscape for the nationally designated Walnut Street Historic District. Overall, the difficulties that exist on the site and per the PRD regulations are not something that were created by the applicant.

The proposed development would easily meet the setback and building separation requirement on a 3-acre+ site that is more commonly found outside of downtown. Downtown is unique in terms of the varying lot sizes and setbacks that are found through the commercial and residential areas. This site in particular is unique in that it contains commercial and residential in one block. The regulations are proving to show that they are not compatible with downtown's configuration and density. Variances exist in order to provide flexibility for exactly this scenario.

As noted by staff findings, the requested variance is reasonable in light of the practical difficulties in complying with the ordinance. Staff finds that the 1st finding is met.

Finding 2. *Conditions on the property that create a hardship, or practical difficulty, that are not present on similar sized lots in the same area and zoning district;*
The proposed use of the property is reasonable and consistent with the general purpose and intent of the comprehensive plan and zoning ordinance. The Comprehensive Plan guides this area for Downtown Mixed Use, which allows for a variety of uses from commercial to residential. Residential uses are allowed densities between 12-40 units per net acre. The project proposes a density of 6.6 units an acre so it's less than what this site calls for. The applicant proposes to develop the subject property into residential homes, which is a reasonable use that is consistent with the general purpose and intent of both the Comprehensive Plan and the established zoning. The intent of the PRD building setbacks and building separation is to create spread out, less dense neighborhoods. This intent does not fit the downtown fabric. In addition, the Comprehensive Plan references the Downtown Master Plan in terms of how the area will develop. The historic Ernst Home was a part of a downtown catalyst site to redevelop Firemen's Park. The Ernst Home was relocated to its current site in downtown so that it coud be preserved. The proposal this evening is consistent with the objective to preserve the Ernst Home and meet the requirements of the historic district as established and reviewed by the Heritage Preservation Commission and the State Historic Preservation Office (SHPO).

As noted by staff findings, the proposed use is consistent with, and meets the general purpose and intent of, the comprehensive plan and zoning ordinances by allowing the construction of residential homes on the subject property while also providing a configuration that is suitable and compatible with downtown Chaska. The proposed use also meets the objective to preserve the Ernst Home and make it usable once again; which is imperative for its longevity. Staff finds that the 2nd finding is met.

Finding 3. *Relationships with abutting property that will not be adversely affected by the Variance.*
The proposed use will not alter the essential character of the locality, and will not adversely affect the abutting properties. The PRD setbacks and building separation are contrary to the layout and configuration of other downtown lots in the area. The variance request will not alter the character of the locality, rather adhering strictly to code will alter the character of the locality in a negative way. By allowing a variance to the Building Setback and Building Separation, the plan will better integrate into the neighborhood and better follow the historic configuration of these lots, and as a result will provide a more positive impact on the neighboring properties.

As noted by staff findings, the building setbacks and building separation provided by the applicant's proposed site plan does not conflict with the essential character of the locality rather it mimics and fits with the overall context. Staff finds that the 3rd finding is met.

The variance shall not impair the health, safety, comfort and general welfare of the public?

The variance will not impair the health, safety, comfort and general welfare of the public. The proposal is designed to emulate the context of downtown and the historic district it is locating in. The setbacks and building separation proposed are in harmony with both those contexts. Adhering strictly to the setbacks and building separation would impair the general context to which it locates in. Resultingly, the Ernst Home is at risk of not being used and properly maintained. The national Walnut Street Historic District would also be at risk of losing its integrity with a historic Ernst Home in a risky position, and a vacant district lot not being filled in.

The variance shall not be contrary to the intent and purpose of the Comprehensive Plan, Official Map or any ordinances of the City?

The variance is consistent with the objectives of the Comprehensive Plan, and Downtown Master Plan. The proposal allows the continuation of the Firemen's Park redevelopment project that sought to preserve the historic Ernst Home. The proposal to add more housing units to this area will allow the Ernst Home to be occupied once again.

Variances shall not allow a use in a district that is not otherwise allowed?

The variance will not allow a use in the zoning district that is not otherwise allowed.

The variance should not be greater than necessary to accomplish the landowner's objective?

The variance is not greater than necessary to accomplish the landowner's objective. The setbacks proposed are greater than what is found on this block, and for downtown Chaska.

Are there alternative locations, development concepts or space requirements that would reduce or eliminate the request?

There are no alternative concepts that would eliminate the request. The alternatives would be to place a building in the middle of the site that would conflict with the streetscape of the national historic district and the Ernst Home.

The variance, if granted, would not alter the essential character of the locality (neighborhood)?

The variance would not alter the essential character of the locality, in fact, it would align and enhance the essential character of the locality. The proposal to add additional housing units to this site will allow the Ernst Home to be used, and maintained, once again, and it will fill in a historic streetscape that has been vacant for 6+ years.

Conforming to City Code, the property could not be put to a "reasonable" use?

Conforming to City Code, the property could not be put to reasonable use. As noted in the above exhibit, the property would have to place a building in the middle of the site and be setback from the streetscape. This would be contrary to the layout of downtown and the national Walnut Street Historic District.

The variance would improve an existing non-conforming condition.

There are no non-conformities that staff are aware of.

The variance will not impair an adequate supply of light and air to adjacent property, or substantially increase the congestion of the public streets, or increase the danger of fire, or endanger the public safety, or substantially diminish or impair property values within the neighborhood?

The variance will enhance property values within this block by filling in an otherwise vacant site, and allowing the Ernst Home to be used and maintained once again. Parking can be accommodated on site.

Accordingly, staff recommends that the Planning Commission move to recommend that the City Council approve the requested variance to reduce the perimeter building setback to 7 feet 8 inches, and the building separation to 8 feet.

Variance Findings

Staff believes there is an undue hardship (practical difficulty) on the applicant, and therefore a variance should be granted, for the following reasons:

1. The property in question cannot be put to reasonable use under the current setbacks and building separation. The property currently is vacant on the north side and contains the historic Ernst Home on the south side. The unique physical constraint on the property comes from the existing Ernst Home which has set a precedence for the setback from the streetscape (Walnut Street), plus establishes a significant building separation limitation on the vacant lot to the north. The national Walnut Street Historic District would be severely hampered if the vacant area is not filled in, and the Ernst Home is not occupied.

2. Characteristics unique to the property and not created by the applicant present practical difficulties in complying with the zoning ordinance. Specifically, the existing placement of the historic Ernst Home, which was a part of a larger community objective to preserve the building and facilitate a downtown redevelopment site (Firemen's Park). The national Walnut Street Historic District also emphasizes the importance of a consistent streetscape. Adhering to the PRD building setbacks and building separation would conflict with such emphasis.

3. The proposed use of the property is reasonable and consistent with the general purpose and intent of the comprehensive plan, downtown master plan and zoning ordinance. The Comprehensive Plan guides this area to be Downtown Mixed Use, which promotes a density of 12-40 units per net acre for residential uses. The project will be 6.6 units per net acre and create a configuration that will be harmonious with the surrounding context and national historic district. The proposal will further reinforce the Downtown Master Plan's redevelopment project of Firemen's Park in providing a use that will save the Ernst Home.

4. The proposed use, if granted, will not alter the essential character of the locality because the reduction in the setback and building separation will allow the site to provide a configuration and density that is consistent with downtown Chaska and necessary for the national Walnut Street Historic District. The essential character will be negatively altered if a variance is not granted.

HPC Meeting February 7, 2023 and SHPO Comments
The City and applicant conducted a Heritage Preservation Commission meeting on Tuesday, February 7, 2023. A Site Alteration Permit (SAP) was approved by HPC at that time. In sum, the HPC were favorable of the layout proposed, and were happy with the changes done to the new housing units. They also stated that the flat roof on the detached garage was a suitable application to help with scaling down the building compared to the Ernst Home. SHPO also echoed this comment in their latest letter.

In addition to the HPC, the State Historic Preservation Office (SHPO) has provided comments on the current project. Comments were provided shortly after Concept Plan approval in 2022, and updated comments were provided on March 27, 2023. The March 2023 comment letter is attached in the packet. It provides analysis related to the design of Unit 1 (unit facing Walnut St), fence location, retaining wall design, and the detached garage. The applicant will be required to submit another formal application for their review, which they will need to do after Preliminary Plan approvals have been received.

Deadline for Agency Action
The City of Chaska received the complete application for this request on Monday, March 13, 2023. Pursuant to Minnesota State Statutes the City is to act on this request by **Friday, May 12th, 2023 (60 days)**, however the City can provide the petitioner with a written letter for an additional 60-day review period for further review if so needed. This additional review period can extend to Tuesday, July 11th, 2023. The City may, with the petitioner's consent, extend the review period beyond the Tuesday, July 11th, 2023 date for an additional 60 days. Lastly, if the City denies the petitioners request "… it must state in writing the reasons for the denial at the time it denies the request."

<u>PLANNING COMMISSION ACTION REQUESTED:</u>
Motion to recommend to City Council approval of the Preliminary Site & Building Plan and Preliminary Plat for 4 housing units on the Ess Lot and Ernst Home (Chaska Yards), subject to the following conditions:

1. **Approvals shall be based on the following graphic exhibits:**
    a. **Narrative (pgs 1-8), prepared by MacDonald & Mack, dated March 13, 2023 and March 29, 2023**
    b. **Aerial Exhibit, prepared by MacDonald & Mack, dated March 10, 2023**
    c. **Existing Conditions, prepared by MacDonald & Mack, dated March 10, 2023**
    d. **Selective Site Demolition and Erosion Control Plan, prepared by MacDonald & Mack, dated March 13, 2023**
    e. **Site Plan, prepared by MacDonald & Mack, dated March 10, 2023**
    f. **Preliminary Plat, prepared by MacDonald & Mack, dated March 10, 2023**
    g. **Landscape Plan, prepared by MacDonald & Mack, dated March 10, 2023**

h. **Overlay Plan, prepared by MacDonald & Mack, dated March 10, 2023**
i. **Grading, Drainage and Erosion Control Plan, prepared by MacDonald & Mack, dated March 13, 2023**
j. **Utility Plan, prepared by MacDonald & Mack, dated March 13, 2023**
k. **Paving and Geometric Plan, prepared by MacDonald & Mack, dated March 13, 2023**
l. **Turning Movement Analysis, prepared by MacDonald & Mack, dated March 13, 2023**
m. **Civil Details (pgs 1-3), prepared by MacDonald & Mack, dated March 13, 2023**
n. **Storm Water Plan, prepared by MacDonald & Mack, dated March 10, 2023**
o. **Photometric Plan, prepared by Pulse, dated December 20, 2022**
p. **Chaska Yards – Concept Renderings (pgs 1-17), prepared by MacDonald & Mack, dated March 10, 2023**
q. **Chaska Yards – Fencing Spec, prepared by MacDonald & Mack, dated March 10, 2023**
r. **Ernst House – Building Elevations, prepared by MacDonald & Mack**
s. **Ernst House – Floor Plan, prepared by MacDonald & Mack**
t. **Chaska Yards – Unit Elevations, prepared by MacDonald & Mack**
u. **Chaska Yards – Floor Plans, prepared by MacDonald & Mack**
v. **Chaska Yards – Garage, prepared by MacDonald & Mack**

2. **Adherence with the City Engineers Memo dated April 5, 2023.**
3. **Adherence with the SHPO letter dated March 27, 2023.**
4. **Provision of 360-degree architecture be provided on the west and south facades of the detached garage by way of landscaping or architectural details.**
5. **Provision that mechanical equipment will be fully screened from view.**
6. **Provision of decorative garage doors to be used on the detached garage.**
7. **Compliance with applicable zoning requirements, in particular Chapter 15.28 (Special Regulations).**
8. **Provision that building code is adhered to for all buildings.**
9. **Provision to explore lighter color options for the new housing units, and to be addressed at final submittal.**
10. **Provision that any existing boulevard trees damaged or removed from this project be replaced prior to issuance of a Certificate of Occupancy.**
11. **Provision that the fence height does not exceed 4 feet and to obtain a fence permit prior to installation.**
12. **Provision that Unit 1's eastern fence is pulled back to be in line with the side elevation, and to be shown on the final plans.**
13. **Provision of continued coordination between the applicant and City regarding the project edge and paseo edge matching up adequately.**
14. **Provision of continued coordinate with the Engineering Department related to utility connections to the site.**
15. **Coordination with and approval by the Engineering Department on an adequate construction traffic plan.**
16. **Provision of a drainage & utility easement approved by the Engineering Department on the south property line to encompass the retaining wall, and to be shown on the final plat.**
17. **Provision of additional coniferous trees added to the north property line of Unit 3, and to be addressed at final submittal.**
18. **Provision of a shared maintenance agreement for the garage and sidewalks is established prior to issuance of a building permit.**

19. **Provision of adequate cross access easements for shared walkways and driveways to be established prior to issuance of a building permit.**

Motion to recommend approval of the Zoning Ordinance Amendment to PRD-74.

Motion to recommend approval of the Variance to Section 15.16.020.F.1. PRD Building Setbacks and Building Separation to reduce the Building Setback from 30 feet to 7 feet 8 inches and the building separation from 25 feet to 8 feet, based on the staff report and the following findings:

1. **The property in question cannot be put to reasonable use under the current setbacks and building separation. The property currently is vacant on the north side and contains the historic Ernst Home on the south side. The unique physical constraint on the property comes from the existing Ernst Home which has set a precedence for the setback from the streetscape (Walnut Street), plus establishes a significant building separation limitation on the vacant lot to the north. The national Walnut Street Historic District would be severely hampered if the vacant area is not filled in, and the Ernst Home is not occupied.**

2. **Characteristics unique to the property and not created by the applicant present practical difficulties in complying with the zoning ordinance. Specifically, the existing placement of the historic Ernst Home, which was a part of a larger community objective to preserve the building and facilitate a downtown redevelopment site (Firemen's Park). The national Walnut Street Historic District also emphasizes the importance of a consistent streetscape. Adhering to the PRD building setbacks and building separation would conflict with such emphasis.**

3. **The proposed use of the property is reasonable and consistent with the general purpose and intent of the comprehensive plan, downtown master plan and zoning ordinance. The Comprehensive Plan guides this area to be Downtown Mixed Use, which promotes a density of 12-40 units per net acre for residential uses. The project will be 6.6 units per net acre and create a configuration that will be harmonious with the surrounding context and national historic district. The proposal will further reinforce the Downtown Master Plan's redevelopment project of Firemen's Park in providing a use that will save the Ernst Home.**

4. **The proposed use, if granted, will not alter the essential character of the locality because the reduction in the setback and building separation will allow the site to provide a configuration and density that is consistent with downtown Chaska and necessary for the national Walnut Street Historic District. The essential character will be negatively altered if a variance is not granted.**

City of Chaska
Memorandum

To: **Planning Commission**
From: **Matt Clark, City Engineer**
Date: **February 8, 2023**
Subject: **Chaska Yards Preliminary Plat**

The Chaska Yards site is bounded by Walnut Street on the east and a city alleyway (future paseo) on the west. Coordination with the TH 41/CSAH 61 Downtown Chaska project will be important from a construction access and phasing standpoint. Access to the site via Walnut street will be restricted during the highway closure.

The site utility plans propose connections to the sanitary sewer and water mains that exist within Walnut Street and are readily available to be connected. Connections to city utilities will not be available until TH 41 is reopened to through traffic which is planned for the fall of 2023. The final construction plans will need to be coordinated with the City utility departments.

Stormwater will be routed through the site from the west and will need to be finalized in partnership with the TH 41 / CSAH 61 project. An easement will be required for any storm sewer pipes that carry public drainage.

CITY OF CHASKA

ORDINANCE NO.

MOTION BY COUNCILMEMBER _____, SECOND BY COUNCILMEMBER _____

AN ORDINANCE AMENDING ZONING ORDINANCE NO. 966 (PRD-74) WITHIN THE CITY OF CHASKA

THE CITY COUNCIL OF THE CITY OF CHASKA DO ORDAIN:

Section I. Zoning Ordinance Amendment. The boundaries of the Zoning Districts as established by Ordinance No. 966 (PRD-74) and as shown on the Zoning Map of Chaska, Minnesota are hereby amended as follows:

The following described real estate is hereby amended and zoned to Planned Residential District No. 74 (PRD-74) for all of Block 1 of the recorded plat of Chaska Yards.

The following graphic exhibits shall serve as the general guide for development of the Chaska Yards area:

i. **Aerial Exhibit, prepared by MacDonald & Mack, dated March 10, 2023**
ii. **Existing Conditions, prepared by MacDonald & Mack, dated March 10, 2023**
iii. **Selective Site Demolition and Erosion Control Plan, prepared by MacDonald & Mack, dated March 13, 2023**
iv. **Site Plan, prepared by MacDonald & Mack, dated March 10, 2023**
v. **Preliminary Plat, prepared by MacDonald & Mack, dated March 10, 2023**
vi. **Landscape Plan, prepared by MacDonald & Mack, dated March 10, 2023**
vii. **Overlay Plan, prepared by MacDonald & Mack, dated March 10, 2023**
viii. **Grading, Drainage and Erosion Control Plan, prepared by MacDonald & Mack, dated March 13, 2023**
ix. **Utility Plan, prepared by MacDonald & Mack, dated March 13, 2023**
x. **Paving and Geometric Plan, prepared by MacDonald & Mack, dated March 13, 2023**
xi. **Turning Movement Analysis, prepared by MacDonald & Mack, dated March 13, 2023**
xii. **Civil Details (pgs 1-3), prepared by MacDonald & Mack, dated March 13, 2023**
xiii. **Storm Water Plan, prepared by MacDonald & Mack, dated March 10, 2023**

xiv. **Photometric Plan, prepared by Pulse, dated December 20, 2022**
xv. **Chaska Yards – Concept Renderings (pgs 1-17), prepared by MacDonald & Mack, dated March 10, 2023**
xvi. **Chaska Yards – Fencing Spec, prepared by MacDonald & Mack, dated March 10, 2023**
xvii. **Ernst House – Building Elevations, prepared by MacDonald & Mack**
xviii. **Ernst House – Floor Plan, prepared by MacDonald & Mack**
xix. **Chaska Yards – Unit Elevations, prepared by MacDonald & Mack**
xx. **Chaska Yards – Floor Plans, prepared by MacDonald & Mack**
xxi. **Chaska Yards – Garage, prepared by MacDonald & Mack**

Section II. **PRD-74 District regulations.** Permitted uses and regulations applicable to the PRD-74 District shall be as follows:

A. Intent

The intent of PRD-74 is to create a unique and qualitative residential development that recognizes, complements and utilizes the downtown historic context and its services.

B. Permitted Uses

Permitted uses shall be the following:

1. Lot 1, Block 1, Chaska Yards
a) Detached single-family

2. Lot 2, Block 1, Chaska Yards
a) Detached single-family

3. Lot 3, Block 1, Chaska Yards
a) Detached single-family

4. Lot 4, Block 1, Chaska Yards
a) Detached single-family

5. Lot 5, Block 1, Chaska Yards
a) Public parking lot

C. Accessory Uses

Customary accessory uses incidental to the foregoing principal use, including but not limited to the following:

1. Off street parking and loading facilities as regulated by Section 15.28.030 of the zoning ordinance.

2. Lots 1-4, Block 1, Chaska Yards: One Monument Sign with the following regulations:
    a. Maximum 12 square feet in area
    b. Maximum 6 feet in height
    c. No internal illumination
    d. Setback 10 feet from property lines

D. Building Setbacks & Building Separation

1. Minimum building setbacks shall be as follows:

    a. Front (east) Setback: 10 feet
    b. Rear (west) Setback: 20 feet
    c. Side (south) Setback: 3 feet
    d. Side (north) Setback: 7 feet
    e. Interior Lot Lines: 2 feet

2. Minimum parking setbacks shall be as follows:

    a. All Property Lines: 3 feet

3. Minimum building separation shall be as follows:
    a. 8 feet

Section III. Effective Date. This Ordinance shall be in full force and effect from and after its date of passage, adoption, and publication according to law.

Passed and adopted by the City Council of the City of Chaska, Minnesota this 17th day of April, 2023.

_____
Mark Windschitl, Mayor

Attest:_____
Deputy Clerk

March 27, 2023 **VIA E-MAIL**

Todd Grover
MacDonald & Mack Architects
400 South Fourth Street, Suite 712
Minneapolis MN 55415

RE: Riedele (Ernst) House Site/Proposed Chaska Yards Housing Project
211 – 217 Walnut Street North
Chaska, Carver County
SHPO Number: 2022-0683

Dear Mr. Grover,

Thank you for continuing consultation with our office regarding the above-referenced project. Information received in our office via e-mail on February 13 and March 14, 2023 has been reviewed pursuant to the responsibilities given the State Historic Preservation Office by the Minnesota Historic Sites Act (Minn. Stat. 138.665-666) and the Minnesota Field Archaeology Act (Minn. Stat. 138.40).

We last wrote to you on April 11, 2022 providing comments on the 30% design phase for the proposed project. We appreciate the fact that the design team has taken into consideration the comments and recommendations we provided at that time and incorporated into a subsequent design phase.

We have now completed a review of your letter dated February 13, 2023, a submission which included the following documentation described as 60% design phase:

- Chaska Yards Concept Renderings (22 pages, dated 1/18/2023); and
- Chaska Yards at the Historic Ess Site 60% Percent Drawings (4 sheets, dated 12/6/2022).

Subsequent to the February 13th submittal, in response to request for more information from our office, you submitted updated site plan drawings (dated 3/13/2023) and updated renderings and floor plans for the new units (dated 3/10/2023).

We have taken the listed documentation (above) into consideration as part of our review.

We continue to understand that the project proponent, Carver County, will utilize State Housing Infrastructure Funds to construct the project. The proposed project, which will involve rehabilitation of the existing Riedele (Ernst) House at 211 Walnut Street and construction of three new housing units on the adjacent vacant lot, is located within and has the potential to affect the **Walnut Street Historic District**, a designated historic property which is listed in the National Register of Historic Places (NRHP). Accordingly, the proposed project is an undertaking subject to review and consultation under Minn. Stat. 138.665, Subd. 2.

We appreciate the extensive narrative description as provided in you February 13th letter with responses to comments we provided in April 2022 at the 30% design stage, and design modifications to the project since our previous review. As you are aware, in order for our office to agree that the proposed state-funded undertaking will not adversely affect the designated historic district, we must reach agreement regarding the proposed design's consistency with the Secretary of the Interior's *Standards for the Rehabilitation of Historic Buildings* (Standards) and associated guidelines. This review for consistency with the Standards applies to both the rehabilitation of the Riedele (Ernst) House and adjacent new construction within the historic district boundary.

Based upon our review of the 60% project plans/renderings submitted on February 13th and the updated design-related materials we received on March 14th, we agree that the overall historic building rehabilitation and new construction plan has been designed consistent with the Standards; however, additional details (such as windows, siding, etc.) will need to be more clearly defined in order to fully understand the overall effect. We make the following recommendations as you move forward in subsequent design phases:

- For the door facing Walnut Street on Unit 1, we agree that a half-glazed door may be an improvement; however, at a minimum the two sidelites should have a bottom rail that matches the height of the door's bottom rail.
- Removal of the upper deck single lite sliding glass doors is a great improvement to the compatibility of the front façade of Unit 1.
- From the drawings received 3/14/23 it appears that Unit 1 is no longer a split level. Please share comparable elevation drawings of the Ernst with the new designs to illustrate compatibility in height.
- The new designs appear to have eliminated the window well at Unit 1. Please confirm that is the case and submit a basement plan for this unit or other means to illustrate.
- Staff recommends pulling the fence back to be even with the front elevation on unit 1.
- Can the overall height of the retaining wall be reduced? Could an earth bank be used in some locations instead of block retaining?
- Staff agrees that the flat roof is least visually intrusive of the garage options we have seen previously. By necessity the garage is rather large, so the reduction in visible size is welcomed.

Please consider the comments provided in this letter. We look forward to subsequent consultation with you and others as the design for the proposed Chaska Yards project proceeds. Feel free to contact me at (651) 201-3290 or if you have any questions regarding our review of this project or would like to discuss next steps.

Sincerely,

Sarah J. Beimers

Sarah J. Beimers
Environmental Review Program Manager

Cc via email:
Chuck Swanson, Carver County CDA
Elizabeth Hanson, City of Chaska

MACDONALD & MACK
ARCHITECTS

3101 East Franklin Avenue Minneapolis MN 55406
P 612.341.4051 • F 612.337.5843 • www.mmarchltd.com

Stuart MacDonald Robert Mack Todd Grover Angela Wolf Scott

March 13, 2023

Elizabeth Hanson, AICP
City Planner
City of Chaska
One City Hall Plaza
Chaska, MN 55138

RE: Preliminary Site Plan Review – Chaska Yards at the Historic Ess Site

Thank you for the opportunity to submit this Preliminary Site Plan for the Ernst House Site in Downtown Chaska. Working with the Carver County CDA our team of MacDonald & Mack Architects, Close Associates, Damon Farber, and BKBM are excited about this affordable housing development that will transform this site in the local and national historic district to be a vital part of the community. These four units will be brought into the Carver County Community Land Trust and sold to households at 80% AMI.

The goal of this project is to build on the unique historic fabric of Downtown Chaska. With its overlapping national and local historic districts, it contains a rich collection of commercial and residential structures that have evolved through 165-years of development. This collection of affordable houses on the Historic Ess site will utilize the moved Ernst House and add 3 more houses to the site. These structures are designed to be compatible and complimentary to the Ernst House and the context of the historic district. By building on and adding to this central site of the City, we will be striving to meet the mission of the City to enhance and maintain the high quality of life while respecting its historic roots.

Carver County CDA will be using State Housing Infrastructure Funds, which will require State Historic Preservation Office review. We have met with SHPO and received their 30% review comments which have been shared with the City of Chaska. We hope to submit this same package to SHPO and receive review comments in early December for their 60% review.

The Concept Plan approval was contingent upon showing more details of the connection to the paseo, better descriptions of the exterior detailing of the new units and addressing setbacks. These are all addressed in the information below and attached.

Historic Development

This site was the historic location of the Ess House. Several years ago, the Ernst House was moved to this site and alongside the Ess House with the intention to fill the empty space in the historic district. After the loss of the Ess House to fire, the empty site was prime for a revived life. Our proposal now offers an opportunity to add residential use back to the site. As part of the process, and to best respond to the existing and historic density of the site, we carefully developed a concept that best fits the historic setting. This was done by looking at historic documentation (Sanborn maps and historic images) and overlaying them with the changes that have occurred in time to ensure the development is compatible.

Existing Site Narrative

The site is bordered on the north by the backsides of several commercial structures that front onto East 3rd St. These rear elevations are utilitarian, with few windows, a dumpster behind the westerly structure (Von Hanson's Meats), "volunteer" trees and bushes, and signs of deferred maintenance. The site design will respond to the buildings with screening.

To the east, the site fronts onto N. Walnut Street and has clear views of a large 3+ story apartment building with single family homes to its south. Existing street trees will eventually help mitigate the scale of the apartment building, which seems out of character with surrounding residences.

To the south, the site overlooks a city-owned parking lot and rooftops of commercial buildings fronting onto E. 2nd St. Views of side and rear walls that form the west side of the alley as it descends to 2nd are also part of the viewshed. In addition to these immediate elements, there are distant views of apartment buildings and more distant treetops. The openness to the south allows plentiful sunlight into the site and provides welcome opportunities for community gardening, play areas and gathering spaces.

To the west, the site faces onto the alley and rear elevations of commercial buildings (some with second story uses) and parking lots that serve them. Power lines and poles run along the east side of the alley and feed buildings on both sides. The parking lots are not well organized or maintained and present an unsightly view. The proposed Paseo plan could significantly improve the character of the space, but screening to minimize the impact of the alley and parking lots is still desirable. Planned garages and fencing will help mitigate the alley's impact.

In addition to the overhead power lines along the west edge of the site, there are underground utilities that will need to be further vetted, including an apparent underground gas line (which may need to be relocated; the survey only identifies a small warning sign), an existing 12" storm sewer line (that may be partially abandoned and doesn't interfere with proposed plans), subgrade utility lines to the Ernst House from Walnut, and subgrade utility stubs from Walnut to the site of the former Ess House.

The site drops relatively gently from the northwest corner to the southeast corner, allowing for ample opportunities to intercept surface water and manage it on-site. In addition, the open portion of the south side of the site (west of the Ernst House) could accommodate a well field for geothermal heating, should it be feasible. The relative flatness of the site also provides the opportunity to have new housing units and the Ernst House relate well to each other to create a "sense of community" within the development. An east-west walkway through the site is planned to primarily serve immediate residents and their guests, although the walk could also allow periodic use by non-residents.

Chaska Yards Site Concept

The new houses are organized around a small central open space. The ownership of this open space is shared by each of the new units. Both the new housing and the Ernst House will also have private yards, separated by low fences, to clearly define spaces that are for personal use. These yards will have room for small patios and amenities like grilles, tables, and chairs.

The site has a central walkway that connects the proposed Paseo to Walnut Street and provides access to all the units, including the Ernst House. At the east end, an entrance wall, steps, and landscaping will help define the sense of entry to the site and provide a small bank of locked boxes for mail delivery. At the west end, a low gate from the Paseo will reinforce that the interior site is not a public space but may occasionally be traversed by visitors. The walkway provides access to the garages and the

garbage/recycling bins for residents. Access to the sidewalks will be covered by a shared use agreement.

The concept of defensible space is integral to the site layout, establishing clear transitions between public, semi-public, and private spaces on the site. This "hierarchy" creates a safer environment for residents and reinforces the concept of "eyes on the street," a proven, passive approach to enhancing site security.

The frontage along Walnut borrows from the private houses across Walnut and elsewhere in the community: houses typically are located with a common setback that aligns with neighboring houses, with side yards between houses. On this site, the new house fronting onto Walnut is designed to match the setback of the Ernst House yet show deference to the larger, historic home with simpler massing and details. The central walk intersects with walks that go to both the Ernst House and the new house, establishing a symmetry between the two. Along the public sidewalk, a limestone wall, composed of stone blocks that are available on-site, will further define the site edge and provide an elegant elevation to street.

A primary goal of the project is to provide high quality open spaces for residents. To reduce the footprint of parking we located the second parking stall for each unit in front of the garages. The garage is also extended to the east to provide each unit a space to store bikes, lawn mowers, tools, or a small work area. The alternative is to introduce an east-west drive isle and parking lot that prevents the formation of communal open spaces on site. We will continue to analyze how these spaces will work with the Paseo, knowing that design is still in early phases of development to ensure these two spaces function as planned. There is also on-street parking along Walnut that could be used by residents and visitors. Walnut is not a commercial street and should not have the same parking demand that other streets have in the district.

The site will be divided into 4 private lots with the center sidewalk and the garage sidewalk falling under a shared use agreement.

Ernst House Concept

The Historic Ernst house that was moved to this site will be restored back to a single-family house. Currently the house has interior modifications that converted it to a commercial office structure and a rental unit on the second floor. These recent modifications will be removed and reconfigured to become a historic 3-betroom house:

- The brick will be repaired, with appropriate mortar being installed and bricks chosen to match where they need to be replaced.
- The columns, cornice, dentils, balusters, and railings will be repaired where possible. Where elements are missing or too deteriorated for reuse, the historic elements will be used to fabricate replica pieces.
    - The porch roof is in severely deteriorated condition, it is expected that structural elements will be replaced, however, the configuration and trim will be matched.
    - The door that leads to the porch roof will be removed and replaced with a window. Looking at historic images it appears this was originally a window, later modified into a door. Due to safety concerns and, but also the need to add a code compliant guardrail in addition to the historic railing, access to this deck will be removed. Matching brick will be toothed in to fill the lower portion of the door opening.

- A back entrance was once installed on the house, however only the flashing from the roofing is the only indication of the historic configuration. No photos were found. A small back entrance porch will be added that compliments the details of the historic house.
- Historic windows will be repaired.
- More recent windows will be replaced with new windows to match the historic configuration.
- Exterior trim will be repaired.
- The interior will be reconfigured with new finishes/fixtures for a family.
- The design will maximize the retention of historic materials/configuration/finishes as part of the project.

New Housing Concept

The new units will have two different floor plans. Unit 1 will be a two-story structure due to the more level grade along Walnut Street. Unit 1 also has a more formal entrance to the east to connect with the historic district along Walnut. Units 2 and 3 use the same plan, a modified split-level. These split-level plans take advantage of the sloped site along the north and west, providing entrances as the houses are set into the slope. But more importantly, the split level allows for compatibility with the Ernst house, so the height of the new structures on the higher areas of the lot do not dominate, but rather acts in concert with the historic house.

The Secretary of the Interior's Standards and Chaska's Preservation Design Manual for New Construction Considerations emphasize that the design of new buildings in Historic Districts need to respect their older neighbors with similar massing, opening orientation, and materials but also be "of their time". It seemed appropriate for the new houses on this site to be slightly smaller, shorter than the existing/historic Ernst House in deference to its size and history. The proposed project development:

- Reflects the current and historic rhythm that was on this site and along the street with openings between buildings and reestablishing the visual continuity of the street.
- Creates a density of structures like when the Ess House and outbuildings occupied the site.
- The scales of the new houses are shorter than the Ernst house, again, giving deference to the historic structures in the district.
- Pitched roofs are on the dominant house form to reflect the typical residential forms found in the district.

As we begin to look at the exterior details of the house, we have found several baseline characteristics of the historic district that we used to understand the direction and detailing the new units:

- The more decorative ornamentation was typically found on the larger houses that fronted City Square. The smaller houses in the broader historic district used much simpler elements.
- In addition, the details found on newer houses or additions to historic houses were typically simpler than the historic structures.
- The predominant siding material used in the district when newer houses or additions were built is horizontal lap siding. This offers a distinct differentiation between the original, historic brick buildings and reflects more recent changes.
- Shutters were infrequently used. Even the historic photos of the Ernst House show that shutters were never installed on that house. Adding shutters to this site would be inappropriate.
- The porch detailing on the Ernst House is original (as noted above) but is still very simple. Any decorative detailing on the new units must not overpower the limited detailing on the historic house.
- The window and door trim on the Ernst House is original, and very simple.

To reinforcing the new units' respectful role (as an affiliated group of structures around Ernst), we are proposing the exterior details include:

- 4" lap siding.
- Simple, enlarged trim, including horizontal banding to break up the vertical dimension of the new units.
- Simple, built-up trim for the doors and windows, to create visual interest and shadow lines.
- Balustrades and railings with simple turned and routed shapes to create shadow lines and elements of decoration at the entrances.
- Since we want to keep these units as affordable as possible, and as we refine these details, we will work with our contractor to identify designs that be efficient and inexpensive to build.
    - The goal is to add interest and detail while not trying to replicate or create a false sense of historic detailing for the new units.
    - We also want to avoid adding details that will create undue expense for the affordable units and potential long-term expense as the future homeowners maintain the property.

The floor plans will include:

- Two bedrooms, a shared bathroom, laundry, storage, and mechanical on the lower levels.
- A mid-level entrance out to the center of the site with access to the share use sidewalk.
- A master bedroom/bathroom, kitchen, dining, living, guest powder room.
- The upper level will have vaulted ceilings over the stairs, kitchen, living, and dining areas.
- A multitude of storage spaces at the entries, in the living areas, bedrooms, and above the master bedroom under the pitched roof.

The garage is placed in the southwest corner of the site. This service structure has a flat roof. This is a deliberate move for a few reasons:

- It fits into the context of downtown and is not precedence setting. Please see the attached map:
    - Unlike other residential areas in the historic district, this is a unique site that shares an alley and block with commercial structures. This is very similar to the other facing block on Chestnut. Both blocks are noted in green on the map. It has a similar configuration of where a few residential structures back up to a block dominated by flat roof main street buildings. On both blocks the residential structures have pitched roofs and most of the other structures have flat roofs. In fact, the other block has no garages, we assume they park on the street. We feel the flat roof garage is appropriate in this context and differentiation of use as it already exists on another block downtown.
    - Also on the map, there are other structures in the historic district that have flat roof additions to their historic pitched roof structures. These are noted in blue.
    - There are two, including one that is a historic designated house, that has a flat roof garage. These are noted with a red circle.
- Another reason for the flat roof is because this garage is at the high point of the site; storm water control is critical. Instead of pitching more water into the alley, the flat roof directs stormwater much more efficiently by being able to go directly into the new storm water utilities on the site.
- A pitched roof would make the garage taller on this high/visually exposed point of the site. The intention is to reduce the scale of this utilitarian building on the site.
- Lastly, the flat roof provides an area for solar panels to deliver renewable energy to affordable housing units.

One focus of the development is to incorporate sustainable practices into all design efforts. As the design progresses, we will endeavor to include:

- A highly insulated envelope using structural insulated panels (SIPs).
- Geothermal heating and cooling, if possible.
- Solar panels on the flat roof of the garage.
- Storm water management and potential reuse on-site.
- Material durability analysis for changing climates.
- Sustainable materials, finishes, and construction practices.

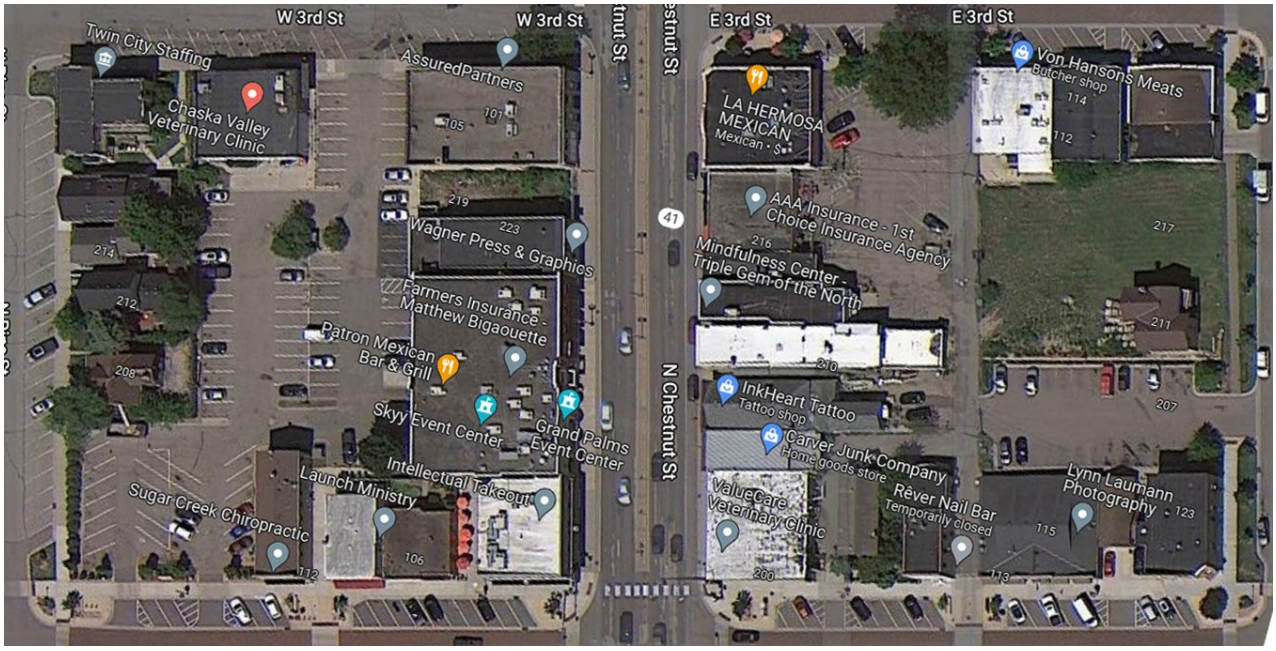

MACDONALD & MACK
ARCHITECTS

3101 East Franklin Avenue Minneapolis MN 55406
P 612.341.4051 • F 612.337.5843 • www.mmarchltd.com

Stuart MacDonald Robert Mack Todd Grover Angela Wolf Scott

March 29, 2023

Elizabeth Hanson, AICP
City Planner
City of Chaska
One City Hall Plaza
Chaska, MN 55138

RE: Preliminary Site Plan Review – Chaska Yards at the Historic Ess Site – Additional Information

Ms. Hanson,

Thank you for your letter of March 20, 2023 requesting a few additional pieces of information for the Chaska Yards submittal. Below and attached is the information requested.

Shared Agreement Explanation

Ingress and egress for all units will be reserved through an easement against the property, as well as a deed covenant. The deed covenant would also require unit owners to maintain the sidewalks. We would also include sidewalk maintenance responsibilities in the ground leases with the CDA.

Building Setback (15.16.020.F.1) Variance:

In the Building Setbacks (15.16.020.F.1) section it notes that setbacks at the perimeter need to be at least 30′ or the heights of the buildings. Most of the houses are under 30′, so the minimum 30′ was used to calculate the setbacks. Additionally, the section notes that the minimum spacing between principal buildings shall be 25′. We have diagramed these measurements on the attached site plan:

- Blue – 30′ setback
- Light blue – area occupied by the City parking lot
- Purple – the current Ernst/Riedele House
- Orange – 25′ setbacks from the Ernst/Riedele House
- Green – The one of the units placed on the site (note, with the additional 25′ setback, only one unit could be placed on the site)

As diagramed, the setbacks and existing conditions create a hardship for the development of these lots. The lots are currently zoned as a C-3 which allows for a very dense development. However, placing PRD requirements on these small lots makes their development extremely difficult. In fact, the density of these lots following PRD requirements creates less density than historically existed on this site. By allowing a variance to the Building Setback, the plan will better integrate into the neighborhood and better follow the historic configuration of these lots. In addition, the proposed plan:

- Will not impair the health, safety, comfort and general welfare of the public in this area. A denser block typical for this area of Chaska.

- Will not be contrary to the intent and purpose of the Comprehensive Plan, Official Map or any ordinances of the City as it only reinforces the C3 zoning density and planning for this area.
- Will not alter the essential character of the neighborhood as denser lots were historically developed here.
- Will not impair an adequate supply of light and air to adjacent property. The new units are low and the adjacent properties to the north have few windows. The windows that do exist will not be blocked as the units will be set back from these walls.
- Will provide the required number of off-street parking as required by code and not increase parking congestion on the streets or public parking lots.
- Will most likely increase the property values on the neighborhood as the current lot is vacant with a vacant structure that needs significant repair.

Lot Coverage (15.16.020.F.2) Variance:

Please see the attached plan showing the lot PRD. No variance needed.

- The full square footage of the lots currently is: 25,775 sf
- The square footage of the area occupied by buildings is: 4,567 (including the garage)
- This is a coverage of 17.7%

Preliminary Plat - Updated

See attached plan showing the adjacent lot and setback dimensions for each building from their respective property lines. As noted above, the lot coverage is 17.7%

Detached Garage Plans

See attached for the garage plans showing a garage door facing west and a personnel door facing east to the shared walkway.

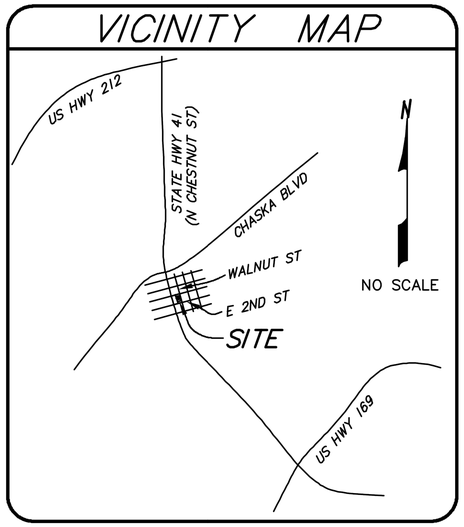

1 AERIAL EXHIBIT

SCALE 1:10

0 10 20 40

SCALE: 1" = 10'-0"

NORTH

MACDONALD & MACK
ARCHITECTS
3101 East Franklin Avenue Minneapolis, MN 55406
P 612.341.4051 - F 612.237.5843 - www.mmarchitd.com

DAMON FARBER
LANDSCAPE ARCHITECTS
310 S 4th Ave Suite 7050
Minneapolis, MN 55415
P 612.332.3382

CHASKA YARDS AT THE HISTORIC ESS SITE
Carver County Community Development Authority
217 Walnut Street North, Chaska, Minnesota 55318

DRAWN BY AM DATE 12/06/2022 REVISION 03/10/2023

AERIAL EXHIBIT

L001

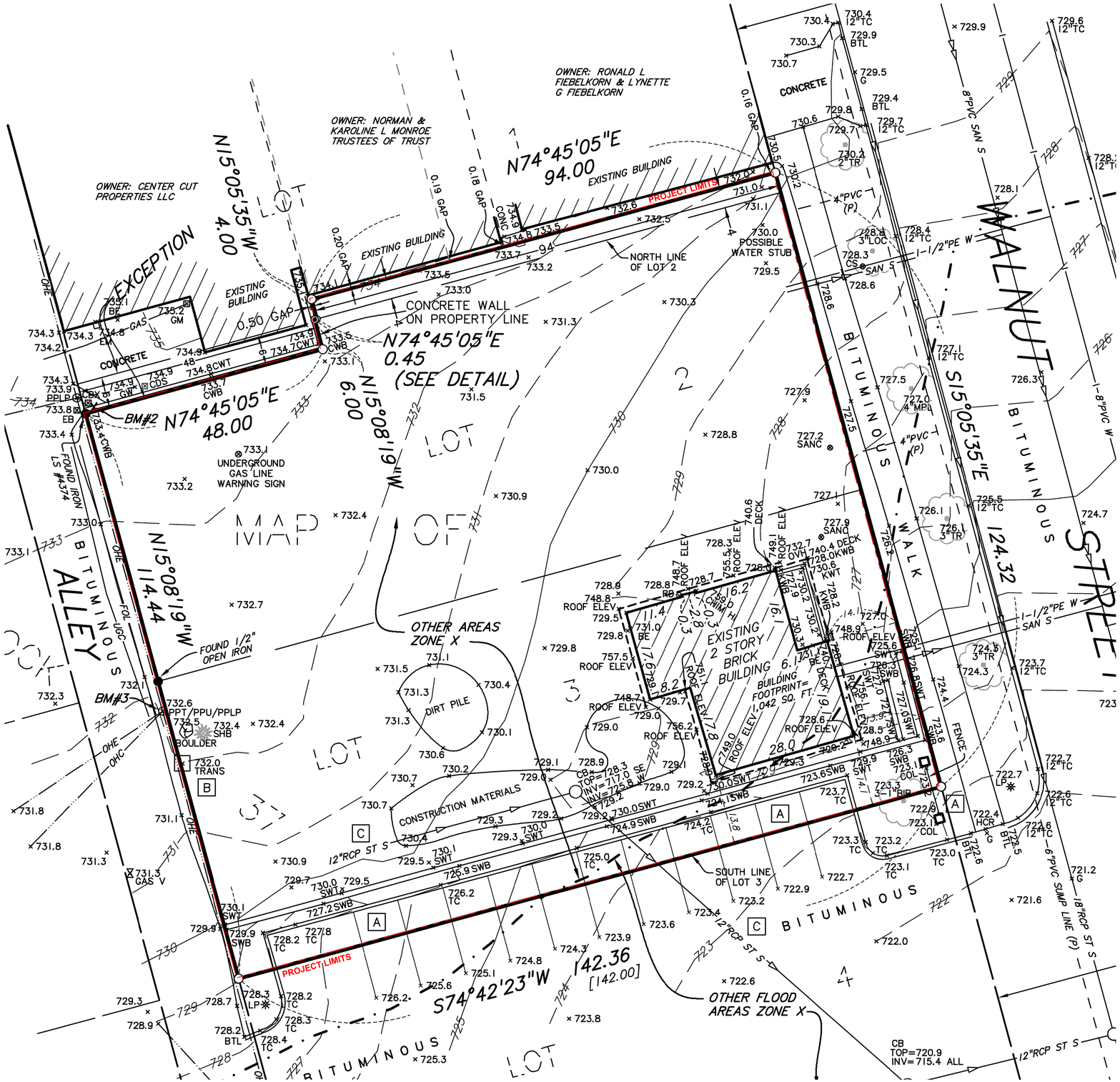

1 EXISTING CONDITIONS

SCALE 1:10

SCALE: 1" = 10'-0"

NORTH

LEGEND

○ Denotes iron monument set marked with P.L.S. No. 44890

● Denotes found iron monument

◉ Denotes 1.17 inch diameter copper magnetized marker with disc cap affixed stamped LS–44890 set

BE	Denotes building entrance
BTL	Denotes beavertail curb
CB	Denotes catch basin
CBX	Denotes communication box
CDS	Denotes civil defense siren
CHIM HI	Denotes chimney height
COL	Denotes building column
CONC	Denotes concrete
CS	Denotes curb stop
CWB	Denotes concrete wall base
CWT	Denotes concrete wall top
EB	Denotes electric box
EM	Denotes electric meter
FOL	Denotes fiber optic line
G	Denotes gutter
GAS V	Denotes gas valve
GM	Denotes gas meter
GW	Denotes guy wire
HCR	Denotes disabled ramp
HYD	Denotes fire hydrant
INV	Denotes structure invert
KWB	Denotes keystone wall top
LP	Denotes light pole
OHC	Denotes overhead communication line
OHE	Denotes overhead electric line
OVH	Denotes overhang
(P)	Denotes per plan
PPLP	Denotes power and light pole
PPT	Denotes power pole with transformer
PPU	Denotes power pole with underground utility
PVC	Denotes polyvinylchloride pipe
RCP	Denotes reinforced concrete pipe
RD	Denotes roof drain
ROOF ELEV	Denotes roof elevation
SAN	Denotes sanitary manhole
SAN S	Denotes sanitary sewer
SANC	Denotes sanitary cleanout
ST S	Denotes storm sewer
SWB	Denotes stone wall base
SWT	Denotes stone wall top
TC	Denotes top of concrete curb
TRANS	Denotes transformer
UGC	Denotes underground communication line
W	Denotes water line
BIR	Denotes Birch tree
LOC	Denotes Locust tree
MPL	Denotes Maple tree
SHB	Denotes shrub
TR	Denotes deciduous tree

MACDONALD & MACK ARCHITECTS
3101 East Franklin Avenue Minneapolis, MN 55406
P 612.341.4051 - F 612.237.5843 - www.mmarchitd.com

DAMON FARBER LANDSCAPE ARCHITECTS
310 S 4th Ave Suite 7050
Minneapolis, MN 55415
P 612.332.3382

CHASKA YARDS AT THE HISTORIC ESS SITE
Carver County Community Development Authority
217 Walnut Street North, Chaska, Minnesota 55318

DRAWN BY	AM	DATE	12/06/2022	REVISION	03/10/2023

EXISTING CONDITIONS

L002

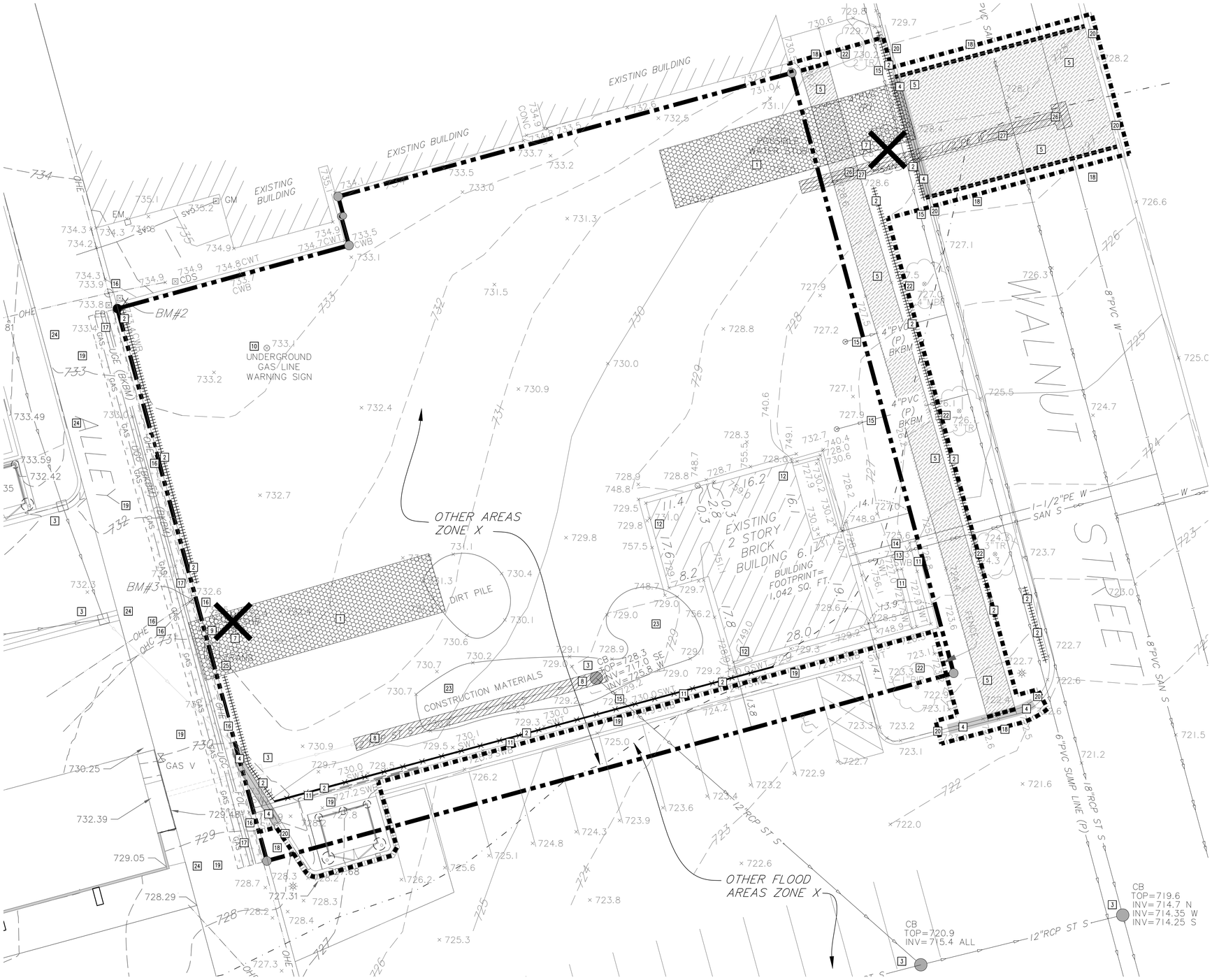

1 C100 SELECTIVE SITE DEMOLITION AND EROSION CONTROL PLAN
1" = 10'

NOTE:
EXISTING SMALL UTILITIES TO REMAIN. SMALL UTILITIES ARE IN THE PROCESS OF RELOCATION AS PART OF THE CITY PASEO PROJECT. ESTIMATE OF CURRENT UNDERGROUND UTILITY LOCATIONS PROVIDED BY CHASKA ELECTRIC. GSOC DESIGN LOCATE AND SURVEY TO BE COMPLETED PRIOR TO CONSTRUCTION DOCUMENTS. CONTRACTOR TO CONTACT GSOC TO CONFIRM LOCATION OF SMALL UTILITIES PRIOR TO CONSTRUCTION.

GENERAL NOTES:

1. CONCRETE CURB AND GUTTER REMOVAL, PAVEMENT REMOVAL, AND UTILITY REMOVAL LIMITS ARE TO BE COORDINATED WITH THE CITY OF CHASKA AND UTILITY OWNER.
2. THE CONTRACTOR SHALL DEVELOP AND IMPLEMENT A TRAFFIC CONTROL PLAN WHILE WORKING WITHIN THE RIGHT-OF-WAY. THE TRAFFIC CONTROL PLAN SHALL BE APPROVED BY THE CITY ENGINEERING DEPARTMENT PRIOR TO STREET ENCROACHMENT.
3. CONTRACTOR SHALL VISIT THE SITE PRIOR TO BIDDING AND REVIEW ALL CONSTRUCTION DOCUMENTS AND GEOTECHNICAL REPORTS. NO ADDITIONAL COMPENSATION WILL BE ALLOWED FOR ITEMS THAT SHOULD HAVE BEEN ANTICIPATED BY PERFORMING THE ABOVE.
4. THE CONSTRUCTION ENTRANCE INDICATED ON THE PLAN IS SHOWN IN AN APPROXIMATE LOCATION. PRIOR TO START OF CONSTRUCTION, THE CONTRACTOR IS TO COORDINATE WITH THE CITY OF CHASKA FOR THE EXACT CONSTRUCTION ENTRANCE LOCATION.

ABBREVIATIONS

BM	Benchmark
BS	Bottom of Step
CB	Catch Basin
CONC	Concrete
CWB	Concrete Wall Bottom
CWT	Concrete Wall Top
ELEV	Elevation
EX	Existing
FFE	Finished Floor Elevation
INV	Invert
LFE	Lower Floor Elevation
MAX	Maximum
MH	Manhole
MIN	Minimum
PVC	Polyvinyl Chloride
RCP	Reinforced Concrete Pipe
STRM	Storm Sewer Structure
SWB	Stone Wall Bottom
SWT	Stone Wall Top
W.O.	Washout

PROPOSED PLAN SYMBOLS

- CONSTRUCTION LIMITS
- SEDIMENT CONTROL LOG
- PROPERTY LINE
- SAWCUT LINE (APPROX.)
- CONSTRUCTION ENTRANCE
- BITUMINOUS REMOVAL
- CONCRETE REMOVAL
- PIPE REMOVAL
- CURB REMOVAL
- ESTIMATE LOCATION OF JOINT UTILITY TRENCH
- TREE REMOVAL

N

10' 5' 0 10' 20'
SCALE 1" = 10'

NOTE:
STORM SEWER INLETS NOT SHOWN ON PLAN MAY RECEIVE RUNOFF FROM CONSTRUCTION ACTIVITIES. INSTALL INLET SEDIMENT PROTECTION PER DETAILS 4/C500, 5/C500, AND 6/C500 ON ALL STORM INLETS THAT MAY RECEIVE RUNOFF.

NOTE:
CONTRACTOR SHALL VISIT THE SITE PRIOR TO BIDDING TO OBTAIN CLEAR UNDERSTANDING OF THE FULL SCOPE OF TREE, UNDER BRUSH, AND OTHER VEGETATION CLEARING THAT NEEDS TO OCCUR.

NOTE:
PRIOR TO THE START OF CONSTRUCTION, THE CONTRACTOR SHALL POTHOLE AND DETERMINE THE LOCATION AND ELEVATION OF EXISTING UNDERGROUND UTILITIES. CONTACT CIVIL ENGINEER IF EXISTING UTILITIES TO REMAIN WILL BE IMPACTED BY PROPOSED WORK.

*NOTE: CONSTRUCTION LIMITS ARE ANTICIPATED TO BE PROPERTY LINE UNLESS OTHERWISE SHOWN.

KEYED NOTES

KEYED NOTES ARE DENOTED BY NO ON PLAN.

1. INSTALL CONSTRUCTION ENTRANCE. REFER TO DETAIL 1/C500. CONSTRUCTION ACCESS SHALL DEPEND ON SCHEDULING OF CITY PROJECTS. CONTRACTOR TO COORDINATE WITH CITY ENGINEER AND RECEIVE ALL NECESSARY PERMITS FOR CONSTRUCTION ACCESS OFF OF WALNUT AND THROUGH THE PASEO.
2. INSTALL PERIMETER EROSION CONTROL. REFER TO DETAILS 2/C500 AND 3/C500.
3. INSTALL INLET SEDIMENT PROTECTION. REFER TO DETAILS 4/C500, 5/C500, AND 6/C500.
4. REMOVE CURB AND GUTTER IN ITS ENTIRETY TO THE APPROXIMATE EXTENTS SHOWN. SAWCUT AND REMOVE AT NEAREST JOINT.
5. SAWCUT AND REMOVE BITUMINOUS PAVEMENT IN ITS ENTIRETY TO THE EXTENTS SHOWN.
6. SAWCUT AND REMOVE CONCRETE PAVEMENT IN ITS ENTIRETY TO THE APPROXIMATE EXTENTS SHOWN.
7. REMOVE TREE IN ITS ENTIRETY INCLUDING STUMP.
8. REMOVE STORM SEWER PIPES AND STRUCTURES IN THEIR ENTIRETY TO THE EXTENTS SHOWN.
9. REMOVE BOULDER.
10. CONTRACTOR SHALL FIELD VERIFY EXISTING GAS LINE AND CONTACT CITY, CIVIL ENGINEER, AND UTILITY OWNER WITH FINDING. CONTRACTOR SHALL COORDINATE RELOCATION WITH CITY, CIVIL ENGINEER, AND UTILITY OWNER.
11. EXISTING RETAINING WALL TO REMAIN. PROTECT AT ALL TIMES.
12. EXISTING BUILDING TO REMAIN. PROTECT AT ALL TIMES.
13. EXISTING SANITARY SEWER SERVICE TO REMAIN. PROTECT AT ALL TIMES.
14. EXISTING WATER SERVICE TO REMAIN. PROTECT AT ALL TIMES.
15. EXISTING STORM SEWER TO REMAIN. PROTECT AT ALL TIMES.
16. EXISTING POWER POLE, OVERHEAD ELECTRICAL LINE, AND OVERHEAD COMMUNICATION LINES TO BE REMOVED BY OTHERS.
17. EXISTING UNDERGROUND UTILITY LINES TO REMAIN. PROTECT AT ALL TIMES. JOINT TRENCH FOR COMCAST, LUMEN TELEPHONE, AND CENTERPOINT GAS. CONTRACTOR TO CONTACT GSOC TO CONFIRM LOCATION OF SMALL UTILITIES.
18. EXISTING BITUMINOUS ASPHALT TO REMAIN. PROTECT AT ALL TIMES.
19. EXISTING CONCRETE TO REMAIN. PROTECT AT ALL TIMES.
20. EXISTING CONCRETE CURB TO REMAIN. PROTECT AT ALL TIMES.
21. EXISTING BITUMINOUS ASPHALT TO REMAIN. PROTECT AT ALL TIMES.
22. EXISTING TREE TO REMAIN. PROTECT AT ALL TIMES.
23. REMOVE EXISTING CONSTRUCTION MATERIALS.
24. EXISTING UNDERGROUND CHASKA ELECTRIC LINE TO REMAIN. PROTECT AT ALL TIMES. CONTRACTOR TO CONTACT GSOC TO CONFIRM LOCATION OF SMALL UTILITIES.
25. TRANSFORMER TO BE REMOVED BY OTHERS.
26. REMOVE EXISTING WATER SERVICE. CUT OUT SERVICE CORP AND 4-FT OF MAINLINE. REFER TO UTILITY PLAN FOR REPAIR OF MAINLINE.
27. REMOVE EXISTING SANITARY SEWER SERVICE. CUT SEWER SERVICE 2-FT FROM MAINLINE. CAP.

DEMOLITION AND REMOVAL NOTES:

1. CONTRACTOR SHALL FOLLOW ALL CITY OF CHASKA STANDARDS AND SPECIFICATIONS.
2. PRIOR TO START OF ANY CONSTRUCTION ACTIVITY, ALL EROSION AND SEDIMENT CONTROL MEASURES ARE TO BE INSTALLED BY THE CONTRACTOR AND INSPECTED BY THE CITY OF CHASKA AND LOWER MINNESOTA RIVER WATERSHED DISTRICT. PERIMETER SEDIMENT PROTECTION SHALL BE INSTALLED ALONG THE CONTOUR.
3. IT IS THE CONTRACTOR'S RESPONSIBILITY TO ASCERTAIN THE LOCATION OF ALL EXISTING UTILITIES. THE CONTRACTOR SHALL VERIFY THE LOCATION, ELEVATION AND MARK ALL EXISTING UTILITIES 48 HOURS BEFORE CONSTRUCTION STARTS. THE ENGINEER, ARCHITECT, OR OWNER DOES NOT GUARANTEE THAT ALL THE UTILITIES ARE MAPPED, OR, IF MAPPED, ARE SHOWN CORRECTLY. CONTACT COPHER STATE ONE CALL AT 651-454-0002 FOR FIELD LOCATING EXISTING UTILITIES. CONTACT UTILITY OWNER IF DAMAGE OCCURS DUE TO CONSTRUCTION.
4. PRIOR TO START OF CONSTRUCTION, THE CONTRACTOR IS TO CLEARLY IDENTIFY IN THE FIELD THE WETLAND PERIMETERS THAT ARE NOT TO BE IMPACTED SO THAT NO ENCROACHMENT OCCURS. AFTER THE PERIMETERS ARE CLEARLY MARKED IN THE FIELD, THE CONTRACTOR SHALL CONTACT LOWER MINNESOTA RIVER WATERSHED DISTRICT TO CONFIRM AND APPROVE NO ENCROACHMENT LIMITS.
5. THERE MAY BE MISCELLANEOUS ITEMS TO BE REMOVED THAT ARE NOT IDENTIFIED ON THESE PLANS. THE CONTRACTOR SHALL VISIT THE SITE AND REVIEW THE DOCUMENTS TO OBTAIN A CLEAR UNDERSTANDING OF THE INTENDED SCOPE OF WORK.
6. REMOVE ALL GAS AND ELECTRIC LINES UNDER PROPOSED BUILDING FOOTPRINT. COORDINATE DISCONNECTION OF EACH UTILITY WITH THE UTILITY OWNER.
7. ANY UTILITIES NOT INDICATED FOR REMOVAL OR ABANDONMENT ARE TO BE PROTECTED AT ALL TIMES.
8. EXISTING CONCRETE PAVEMENT AND CURB AND GUTTER SHOWN TO BE REMOVED WITHIN THE SCOPE OF THE PROJECT SHALL BE REMOVED FROM THE SAW CUT LINES TO THE NEAREST JOINT.
9. THE BACKGROUND INFORMATION WAS PREPARED BY SUNDE LAND SURVEYING, (952) 881-2455.
10. ALL WORK IN THE PUBLIC RIGHT OF WAY IS TO BE COORDINATED WITH THE CITY OF CHASKA. ROADWAY REPAIRS, BOULEVARD REPAIRS, AND TRAFFIC CONTROL ARE TO BE PER CITY OF CHASKA STANDARDS AND SPECIFICATIONS.

MACDONALD & MACK ARCHITECTS
3101 East Franklin Avenue Minneapolis, MN 55406
P 612.341.4051 - F 612.237.5843 - www.mmarchitd.com

Plans, and the ideas, specifications, or designs contained in these plans and specifications are the property of MacDonald & Mack Architects and shall not be used by others without written consent of the Architect of Record.

Sheet 1 of 1 Sheets
Job # 2021-0

BKBM ENGINEERS
6120 Earle Brown Dr., Suite 700
Minneapolis, MN 55340
Phone: (763) 843-0420
Fax: (763) 843-0421
www.bkbm.com

CHASKA YARDS AT THE HISTORIC ESS SITE
Carver County Community Development Authority
217 Walnut Street North, Chaska, Minnesota 55318

DRAWN BY: MH CHECKED BY: GRD DATE: 02/13/2023 REVISION:

SELECTIVE SITE DEMOLITION AND EROSION CONTROL PLAN

C100

MATERIALS SCHEDULE

SYMBOL	FENCE & GUARDRAIL DESCRIPTION	QTY
FE-01	FENCE TYPE 01 - 4' HGT WOOD SLAT FENCE	322 LF

SYMBOL	GATE DESCRIPTION	QTY
GA-01	GATE TYPE 01 - TIMBER GATE	2

SYMBOL	PAVING DESCRIPTION	QTY
P-01	PAVING TYPE 01 - CONCRETE	2,591 SF
P-03	PAVING TYPE 03 - DECKING	93 SF

SYMBOL	STAIRS DESCRIPTION	QTY
ST-01	STAIR TYPE 01 - CIP STAIRS	

SYMBOL	WALL DESCRIPTION	QTY
WL-01	WALL TYPE 01 - LIMESTONE WALL TO MATCH EXISTING	206 LF
WL-02	WALL TYPE 02 - EXISTING LIMESTONE WALL	141 LF

1 PARKING STALL

T TRANSFORMER

SITE INFORMATION

SITE AREA: 17,230 SQ FT

1 SITE PLAN

SCALE 1:10

0 10 20 40

SCALE: 1" = 10'-0"

NORTH

MACDONALD & MACK ARCHITECTS
3101 East Franklin Avenue Minneapolis, MN 55406
P 612.341.4051 - F 612.237.5843 - www.mmarchitd.com

DAMON FARBER LANDSCAPE ARCHITECTS
310 S 4th Ave Suite 7050
Minneapolis, MN 55415
P 612.332.7592

CHASKA YARDS AT THE HISTORIC ESS SITE
Carver County Community Development Authority
217 Walnut Street North, Chaska, Minnesota 55318

DRAWN BY	AM	DATE	12/06/2022	REVISION	03/10/2023

SITE PLAN

L110

PRELMINARY PLAT

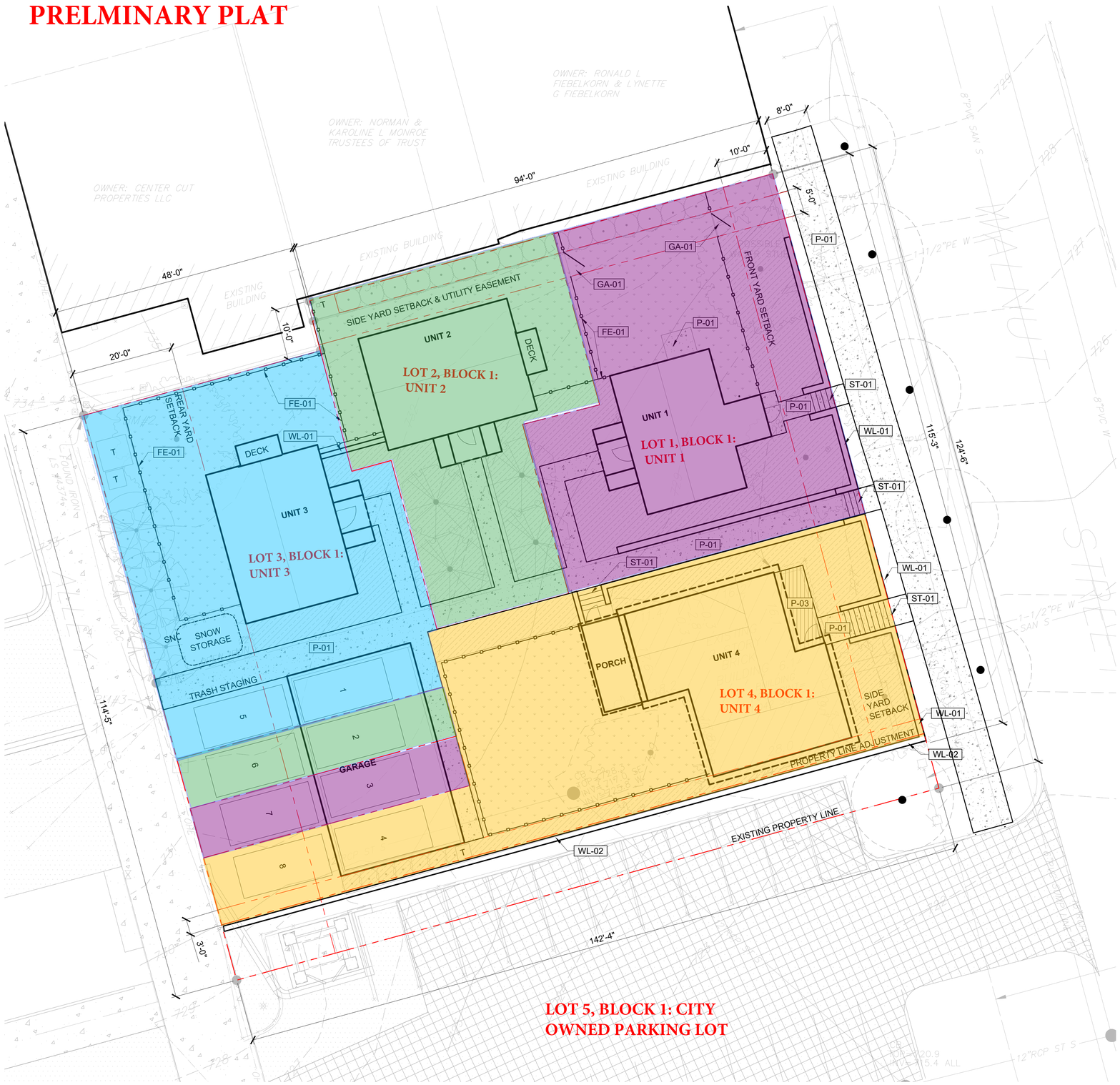

MATERIALS SCHEDULE

SYMBOL	FENCE & GUARDRAIL DESCRIPTION	QTY
FE-01	FENCE TYPE 01 - 4' HGT WOOD SLAT FENCE	322 LF

SYMBOL	GATE DESCRIPTION	QTY
GA-01	GATE TYPE 01 - TIMBER GATE	2

SYMBOL	PAVING DESCRIPTION	QTY
P-01	PAVING TYPE 01 - CONCRETE	2,591 SF
P-03	PAVING TYPE 03 - DECKING	93 SF

SYMBOL	STAIRS DESCRIPTION	QTY
ST-01	STAIR TYPE 01 - CIP STAIRS	

SYMBOL	WALL DESCRIPTION	QTY
WL-01	WALL TYPE 01 - LIMESTONE WALL TO MATCH EXISTING	206 LF
WL-02	WALL TYPE 02 - EXISTING LIMESTONE WALL	141 LF

1 PARKING STALL

T TRANSFORMER

SITE INFORMATION

SITE AREA: 17,230 SQ FT

1 SITE PLAN

SCALE 1:10

0 10 20 40

SCALE: 1" = 10'-0"

NORTH

MACDONALD & MACK ARCHITECTS
3101 East Franklin Avenue Minneapolis, MN 55406
P 612.341.4051 - F 612.237.5843 - www.mmarchitd.com

DAMON FARBER LANDSCAPE ARCHITECTS
310 S 4th Ave Suite 7050
Minneapolis, MN 55415
P 612.332.7592

CHASKA YARDS AT THE HISTORIC ESS SITE
Carver County Community Development Authority
217 Walnut Street North, Chaska, Minnesota 55318

DRAWN BY	AM	DATE	12/06/2022	REVISION	03/10/2023

SITE PLAN

L110

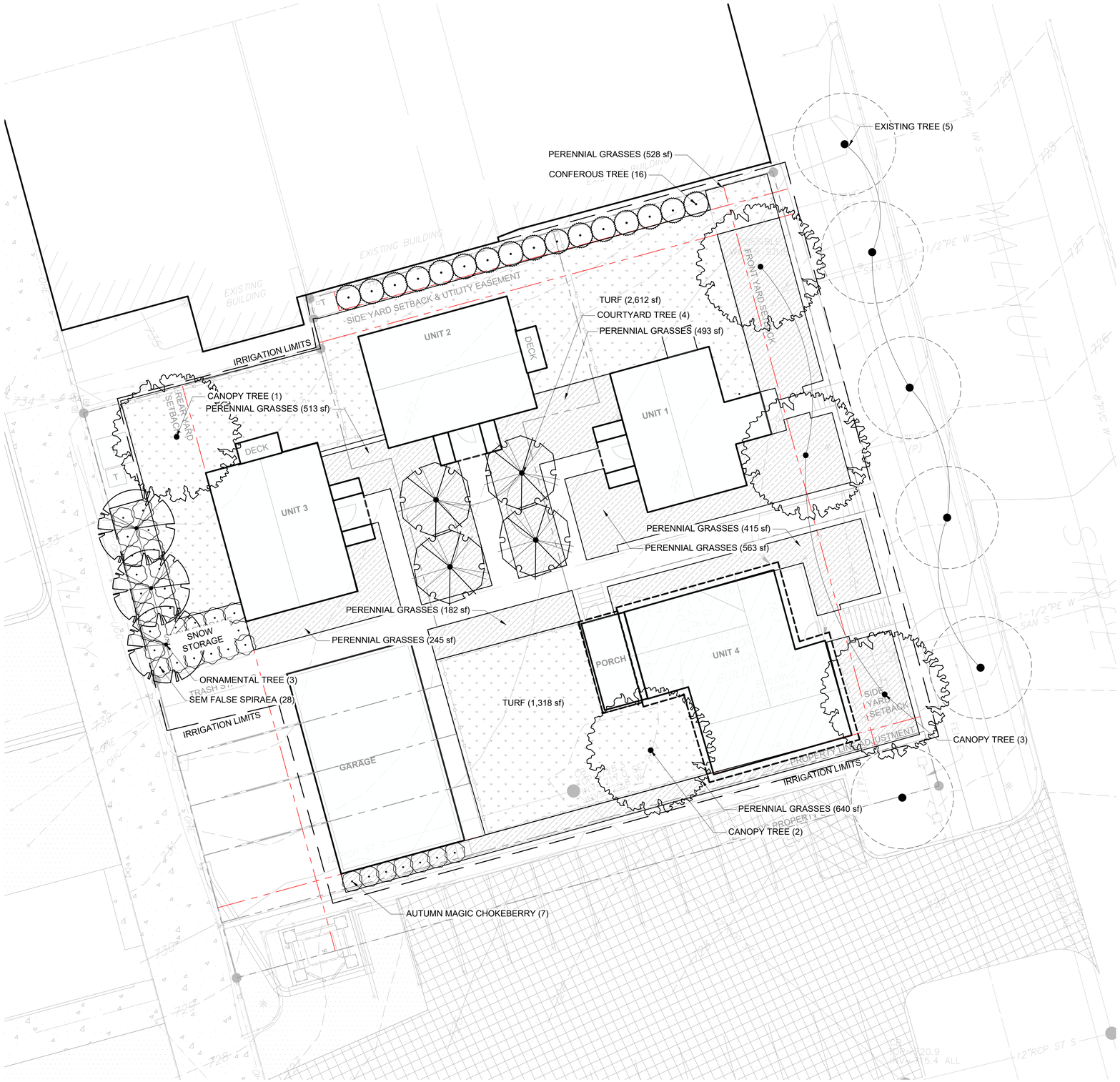

CONCEPT PLANT SCHEDULE

	CANOPY TREE 2.5" CAL WHITE OAK -	5
	EXISTING TREE -	6
	ORNAMENTAL TREE 2" CAL SERVICEBERRY -	3
	COURTYARD TREE 2" CAL QUAKING ASPEN -	4
	CONFEROUS TREE 6` HGT HOLMSTRUP ARBORVITAE -	16
	AUTUMN MAGIC CHOKEBERRY ARONIA MELANOCARPA `AUTUMN MAGIC` - #5 - 48" OC -	7
	SEM FALSE SPIRAEA SORBARIA SORBIFOLIA `SEM` - #3 - 48" O.C. -	28
	PERENNIAL GRASSES -	3,580 SF
	TURF SOD -	3,819 SF

OVERSTORY TREE PLANTING REQUIREMENTS

TREE CAL INCH SHOULD EQUAL GROSS SQ FT OF HOMES DIVIDED BY 320.

UNIT 1: 1,340 SF
UNIT 2: 1,340 SF
UNIT 3: 1,340 SF
UNIT 4: 3,100 SF

TOTAL: 7,120 SF
REQUIRED CAL INCH: 22.25

PROPOSED CAL INCH: 62.5 (22.5 DECIDUOUS , 40 CONIFEROUS)

SHRUB PLANTING REQUIREMENTS

THE NUMBER OF SHRUBS SHALL BE EQUAL TO ONE (1) SHRUB PER THIRTY (30) FEET OF SITE PERIMETER OR ONE (1) SHRUB PER THREE-HUNDRED (300) SQUARE FEET OF BUILDING FOOTPRINT, WHICHEVER IS GREATER.

SITE PERIMETER: 515 LF
REQUIRED # OF SHRUBS: $\frac{515}{30}$ =18

TOTAL AREA OF BUILDING: 7,120 SF
REQUIRED # OF SHRUBS: $\frac{7120}{300}$ =24

PROPOSED # OF SHRUBS: 34

UNDERSTORY TREE PLANTING REQUIREMENTS

THE NUMBER OF UNDERSTORY TREES SHALL BE EQUAL TO TWENTY-FIVE (25) PERCENT OF THE REQUIRED NUMBER OF OVERSTORY TREES.

REQUIRED OVERSTORY CAL INCH: 22.25
REQUIRED UNDERSTORY CAL INCH: 5.5

PROPOSED UNDERSTORY CAL INCH: 6

USABLE OPEN SPACE REQUIREMENTS

SUFFICIENT, USABLE OPEN SPACE SHALL BE PROVIDED FOR MULTI-FAMILY RESIDENTIAL BUILDING SITES. FOR SITES UNDER 43,560 SQUARE FEET (1 ACRE) IN GROSS SITE AREA, A MINIMUM OF 10% OF THE GROSS SITE AREA SHALL BE SHARED OPEN SPACE BUT IN NO CASE BE LESS THAN 2,500 SQUARE FEET IN SIZE; THE MINIMUM DIMENSIONS FOR SUCH OPEN SPACES SHALL BE 50 FEET IN LENGTH AND 50' IN WIDTH.

SITE AREA: 15,930 SF

REQUIRED USABLE OPEN SPACE: 1,593 SF

PROPOSED USABLE OPEN SPACE: 4,870 SF

1 LANDSCAPE PLAN
SCALE 1:10

0 10 20 40
SCALE: 1" = 10'-0"

NORTH

MACDONALD & MACK ARCHITECTS
3101 East Franklin Avenue Minneapolis, MN 55406
P 612.341.4051 - F 612.237.5843 - www.mmarchitect.com

DAMON FARBER LANDSCAPE ARCHITECTS
310 S 4th Ave Suite 7050
Minneapolis, MN 55415
P 612.332.3382

CHASKA YARDS AT THE HISTORIC ESS SITE
Carver County Community Development Authority
217 Walnut Street North, Chaska, Minnesota 55318

DRAWN BY	DATE	REVISION
AM	12/06/2022	03/10/2023

LANDSCAPE PLAN

L130

OVERLAY PLAN

THIS PLAN INCLUDES A COMPOSITE OF THE SITE PLAN, LANDSCAPE PLAN, AND UTILITY PLAN. REFER TO INDIVIDUAL PLANS FOR ADDITIONAL INFORMATION.

1 OVERLAY PLAN

SCALE 1:10

0 10 20 40

SCALE: 1" = 10'-0"

NORTH

MACDONALD & MACK ARCHITECTS
3101 East Franklin Avenue Minneapolis, MN 55406
P 612.341.4051 - F 612.237.5843 - www.mmarchitect.com

DAMON FARBER LANDSCAPE ARCHITECTS
310 S 4th Ave Suite 7050
Minneapolis, MN 55415
P 612.332.3382

CHASKA YARDS AT THE HISTORIC ESS SITE
Carver County Community Development Authority
217 Walnut Street North, Chaska, Minnesota 55318

DRAWN BY AM DATE 12/06/2022 REVISION 03/10/2023

OVERLAY PLAN

L190

PASEO DESIGN NOTES:

1. BACKGROUND INFORMATION STANTEC DESIGN DATED 03-04-2022 FOR THE TH 41 CSAH 61 IMPROVEMENTS IS SHOWN.
2. AN ALTERNATIVE DESIGN FOR THE STORMWATER CONNECTION TO THIS SITE IS PROPOSED IN THIS PLAN.

NOTE:
EXISTING SMALL UTILITIES TO REMAIN. SMALL UTILITIES ARE IN THE PROCESS OF RELOCATION AS PART OF THE CITY PASEO PROJECT. ESTIMATE OF CURRENT UNDERGROUND UTILITY LOCATIONS PROVIDED BY CHASKA ELECTRIC. GSOC DESIGN LOCATE AND SURVEY TO BE COMPLETED PRIOR TO CONSTRUCTION DOCUMENTS. CONTRACTOR TO CONTACT GSOC TO CONFIRM LOCATION OF SMALL UTILITIES PRIOR TO CONSTRUCTION.

1
C200
GRADING, DRAINAGE, AND EROSION CONTROL PLAN
1" = 10'

ABBREVIATIONS	
BM	Benchmark
BS	Bottom of Step
CB	Catch Basin
CONC	Concrete
CWB	Concrete Wall Bottom
CWT	Concrete Wall Top
ELEV	Elevation
EX	Existing
FFE	Finished Floor Elevation
INV	Invert
LFE	Lower Floor Elevation
MAX	Maximum
MH	Manhole
MIN	Minimum
PVC	Polyvinyl Chloride
RCP	Reinforced Concrete Pipe
STRM	Storm Sewer Structure
SWB	Stone Wall Bottom
SWT	Stone Wall Top
W.O.	Washout

*NOTE: CONSTRUCTION LIMITS ARE ANTICIPATED TO BE PROPERTY LINE UNLESS OTHERWISE SHOWN.

APPROXIMATE DISTURBED AREA IS **0.32** ACRES

NOTE:
STORM SEWER INLETS NOT SHOWN ON PLAN MAY RECEIVE RUNOFF FROM CONSTRUCTION ACTIVITIES. INSTALL INLET SEDIMENT PROTECTION PER DETAILS 4/C5.0, 5/C5.0, AND 6/C5.0 ON ALL STORM INLETS THAT MAY RECEIVE RUNOFF.

PROPOSED PLAN SYMBOLS

CONSTRUCTION LIMITS	
SEDIMENT CONTROL LOG	
PROPERTY LINE	
SAWCUT LINE (APPROX.)	
PROPOSED CONTOUR	732
DRAIN TILE	
STORM SEWER	
RETAINING WALL	
PROPOSED EASEMENT	
FUTURE PROPERTY LINE	
PROPOSED FENCE	
CATCH BASIN	
MANHOLE	
EROSION CONTROL BLANKET (TEMPORARY)	
ROCK CONSTRUCTION ENTRANCE	
DRAINAGE FLOW ARROW	
RETAINING WALL SPOT ELEVATION	TW 30.00 / BW 28.00
SPOT ELEVATION	29.50
SOIL BORING	SB-1
CONCRETE WASHOUT AREA	CONCRETE W.O. AREA

N

10' 5' 0 10' 20'
SCALE 1" = 10'

RETAINING WALL NOTES:

1. ALL TOP AND BOTTOM ELEVATIONS CORRESPOND TO THE RESPECTIVE GRADE ELEVATIONS ON EACH SIDE OF THE WALL.
2. THE BOTTOM ELEVATION IS THE ELEVATION OF THE LOW-GRADE SIDE OF THE WALL, NOT THE ELEVATION OF THE BURIED BLOCK COURSE.
3. ALL RETAINING WALLS SHALL HAVE PROTECTIVE FENCING AT THE TOP WHERE THE VERTICAL HEIGHT EXCEEDS 48 INCHES. REFER TO LANDSCAPE PLANS AND SPECIFICATIONS.
4. STACKED LIMESTONE WALL BY LANDSCAPE ARCHITECT.

WALKWAY NOTES:

1. GRADING CONTRACTOR IS TO COORDINATE WITH PAVING CONTRACTOR SO THAT ALL STEPS AND LANDINGS ARE SLOPED PER CODE.
2. ALL SIDEWALK LONGITUDINAL AND TRANSVERSE SLOPES ARE TO BE PER CODE.

KEYED NOTES

KEYED NOTES ARE DENOTED BY [NO] ON PLAN.

[1] INSTALL ROCK CONSTRUCTION ENTRANCE. REFER TO DETAIL **1/C5.0**.

[2] INSTALL PERIMETER EROSION CONTROL. REFER TO DETAILS **2/C5.0 AND 3/C5.0**.

[3] INSTALL INLET SEDIMENT PROTECTION. REFER TO DETAILS **4/C5.0, 5/C5.0, AND 6/C5.0**.

[4] APPROXIMATE LOCATION OF TEMPORARY CONTAINED CONCRETE WASH OUT BIN. REFER TO THE MINNESOTA'S NPDES/SDS GENERAL STORMWATER PERMIT FOR CONSTRUCTION ACTIVITY FOR MORE DETAILS. SELF CONTAINED CONCRETE WASHOUTS ON CONCRETE DELIVERY TRUCKS IS AN ACCEPTABLE ALTERNATIVE TO ON-SITE CONTAINMENT.

[5] EXACT LOCATION OF GAS SERVICE IS NOT KNOWN. PRIOR TO THE START OF CONSTRUCTION, THE CONTRACTOR SHALL POTHOLE AND DETERMINE THE EXACT LOCATION AND ELEVATION OF EXISTING GAS LINE. CONTACT CIVIL ENGINEER AND OWNER WITH FINDINGS.

GRADING NOTES:

1. THE CONTRACTOR SHALL VISIT THE SITE, REVIEW ALL CONSTRUCTION DOCUMENTS, AND FIELD VERIFY THE EXISTING CONDITIONS PRIOR TO BIDDING. NO ADDITIONAL COMPENSATION WILL BE GIVEN FOR WORK THAT COULD HAVE BEEN IDENTIFIED BY A SITE VISIT OR CONSTRUCTION DOCUMENT REVIEW.
2. THE BACKGROUND INFORMATION WAS PREPARED BY SUNDE LAND SURVEYING. CONTACT (952) 881-2455.
3. IT IS THE CONTRACTOR'S RESPONSIBILITY TO ASCERTAIN THE LOCATION OF ALL EXISTING UTILITIES. THE CONTRACTOR SHALL VERIFY THE LOCATION, ELEVATION AND MARK ALL EXISTING UTILITIES 48 HOURS BEFORE CONSTRUCTION STARTS. THE ENGINEER, ARCHITECT, OR OWNER DOES NOT GUARANTEE THAT ALL THE UTILITIES ARE MAPPED, OR, IF MAPPED, ARE SHOWN CORRECTLY. CONTACT GOPHER STATE ONE CALL AT 651-454-0002 FOR FIELD LOCATING EXISTING UTILITIES. CONTACT UTILITY OWNER IF DAMAGE OCCURS DUE TO CONSTRUCTION.
4. PROTECT ALL EXISTING STRUCTURES AND UTILITIES WHICH ARE NOT SCHEDULED FOR REMOVAL.
5. NOTIFY CITY BUILDING INSPECTOR BEFORE TRENCHING AND EXCAVATION WORK COMMENCES. THE CONTRACTOR SHALL OBTAIN ALL APPLICABLE PERMITS PRIOR TO START OF CONSTRUCTION.
6. ALL SPOT ELEVATIONS SHOWN AS 30.00, FOR EXAMPLE, ARE TO BE UNDERSTOOD TO MEAN 730.00.
7. ALL SPOT ELEVATIONS ALONG THE CURB-LINE INDICATE THE ELEVATION OF THE GUTTER, UNLESS NOTED OTHERWISE.
8. NO LANDSCAPED SLOPES ARE TO EXCEED 3:1 (3 FEET HORIZONTAL TO 1 FOOT VERTICAL) UNLESS NOTED OTHERWISE.
9. ACCESSIBLE PARKING AREAS SHALL NOT HAVE SLOPES IN ANY DIRECTION THAT EXCEED 2%.
10. PROVIDE POSITIVE DRAINAGE FROM BUILDINGS AT ALL TIMES.
11. ALL DEBRIS CREATED IN THE PROCESS OF CLEARING AND GRADING THE SITE SHALL BE REMOVED FROM THE SITE. THIS INCLUDES TREES AND SHRUBS. UNDER NO CIRCUMSTANCES SHALL THIS TYPE OF MATERIAL BE BURIED OR BURNED ON THE SITE.
12. THE CONTRACTOR MAY STRIP AND SALVAGE TOPSOIL FOR POTENTIAL RE-SPREADING ON THE SITE, IF APPROVED BY THE LANDSCAPE ARCHITECT AND/OR SPECIFICATIONS. SIX INCHES OF TOPSOIL – AFTER COMPACTION – SHALL BE RE-SPREAD PRIOR TO SEEDING AND MULCHING. EXCESS TOPSOIL MAY BE REMOVED FROM THE SITE PROVIDED THERE IS ADEQUATE TOPSOIL REMAINING TO PROPERLY FINISH THE SITE AS NOTED ABOVE. THE TOPSOIL STRIPPING, STOCKPILING, AND RE-SPREADING SHALL BE DONE IN ACCORDANCE WITH, AND NOTED ON, THE APPROVED GRADING PLAN AND SPECIFICATIONS. THE CONTRACTOR SHALL REFER TO THE LANDSCAPE DRAWINGS AND SPECIFICATIONS FOR ANY SPECIAL TOPSOIL OR PLANTING REQUIREMENTS.
13. ALL GRADING OPERATIONS SHALL BE CONDUCTED IN A MANNER TO MINIMIZE THE POTENTIAL FOR SITE EROSION. EROSION CONTROL MEASURES SHALL BE INSTALLED TO PREVENT SEDIMENT FROM RUNNING OFF ONTO ADJACENT PROPERTIES. ANY DAMAGE TO ADJACENT PROPERTIES MUST BE CORRECTED AND RESTORED AS SOON AS PERMISSION IS GRANTED FROM THE ADJACENT PROPERTY OWNER(S).
14. IF CONSTRUCTION OF THE SITE WORK PROCEEDS THROUGH THE WINTER MONTHS, ANY DISTURBED AREAS OUTSIDE THE BUILDING FOOTPRINTS ARE TO BE MINIMALLY STABILIZED PRIOR TO MARCH 1, AS FOLLOWS: AREAS PLANNED TO RECEIVE PAVEMENTS ARE TO HAVE CLASS 5 BASE INSTALLED; ALL OTHER DISTURBED AREAS ARE TO BE SEEDED, STRAW MULCH PLACED, AND DISC-ANCHORED.
15. WINTER MULCHING:
    - 15.A. SNOW MULCHING SHALL BE DEFINED AS MULCH MATERIAL SPREAD OVER THE TOP OF SNOW SO THAT THE MULCH MELTS THROUGH THE SNOW AND STICKS TO THE EXPOSED SOILS.
    - 15.B. FROZEN GROUND MULCHING SHALL BE DEFINED AS MULCH MATERIAL SPREAD OVER FROZEN GROUND. MULCH MATERIALS THAT DO NOT REQUIRE DISC-ANCHORING INTO THE SOIL MAY BE PLACED WITHOUT MODIFICATION. MULCH MATERIALS THAT REQUIRE DISC-ANCHORING MAY BE ANCHORED WITH HYDRAULIC SOIL STABILIZERS OR MAY BE FROZEN TO THE SOIL BY APPLYING WATER AT A RATE OF 2000 GALLONS PER ACRE OVER THE MULCH AS A SUBSTITUTION FOR DISC-ANCHORING.
16. THE CONTRACTOR SHALL LIMIT THE DISTURBED AREA AS MUCH AS POSSIBLE.

EROSION CONTROL NOTES:

1. ALL EROSION CONTROL FACILITIES SHALL BE INSTALLED PRIOR TO ANY SITE GRADING OPERATIONS. THE CITY ENGINEERING DEPARTMENT MUST BE NOTIFIED UPON COMPLETION OF THE INSTALLATION OF THE REQUIRED EROSION CONTROL FACILITIES AND PRIOR TO ANY GRADING OPERATION BEING COMMENCED. THE CONTRACTOR IS RESPONSIBLE FOR SCHEDULING A PRE-CONSTRUCTION GRADING MEETING ON-SITE WITH THE CITY. IF DAMAGED OR REMOVED DURING CONSTRUCTION, ALL EROSION CONTROL FACILITIES SHALL BE RESTORED AND IN PLACE AT THE END OF EACH DAY.
2. ANY EROSION CONTROL FACILITIES DEEMED NECESSARY BY THE CITY; BEFORE, DURING OR AFTER THE GRADING ACTIVITIES, SHALL BE INSTALLED AT THEIR REQUEST.
3. NO DEVIATIONS SHALL BE MADE FROM THE ELEVATIONS SHOWN ON THE APPROVED GRADING PLAN WITHOUT PRIOR APPROVAL FROM THE CIVIL ENGINEER.
4. SOILS TRACKED FROM THE SITE BY MOTOR VEHICLES OR EQUIPMENT SHALL BE CLEANED DAILY FROM PAVED ROADWAY SURFACES, OR MORE FREQUENTLY IF REQUESTED BY CITY, THROUGHOUT THE DURATION OF CONSTRUCTION.
5. DUST CONTROL MEASURES SHALL BE PERFORMED PERIODICALLY WHEN CONDITIONS REQUIRE AND/OR AS DIRECTED BY THE CITY.
6. ALL EROSION CONTROL MEASURES SHALL BE USED AND MAINTAINED FOR THE DURATION OF SITE CONSTRUCTION. IF CONSTRUCTION OPERATIONS OR NATURAL EVENTS DAMAGE OR INTERFERE WITH THESE EROSION CONTROL MEASURES, THEY SHALL BE RESTORED TO SERVE THEIR INTENDED FUNCTION AT THE END OF EACH DAY OR AS SOON AS FIELD CONDITIONS ALLOW ACCESS.
7. ALL AREAS DISTURBED DURING CONSTRUCTION SHALL BE RESTORED AS SOON AS POSSIBLE. ANY AREAS WHICH HAVE BEEN FINISHED GRADED OR AREAS THAT HAVE BEEN DISTURBED AND FOR WHICH GRADING OR SITE BUILDING CONSTRUCTION OPERATIONS ARE NOT ACTIVELY UNDERWAY SHALL BE SEEDED AND MULCHED AS SET FORTH IN THE FOLLOWING PARAGRAPHS WITHIN 7 DAYS:
    - A. ALL SEEDED AREAS SHALL BE EITHER MULCHED AND DISC-ANCHORED OR COVERED BY FIBROUS BLANKETS TO PROTECT SEEDS AND LIMIT EROSION. TEMPORARY STRAW MULCH SHALL BE DISC-ANCHORED AND APPLIED AT A UNIFORM RATE OF NOT LESS THAN TWO TONS PER ACRE AND NOT LESS THAN 80% COVERAGE.
    - B. IF THE GRADED AREA IS ANTICIPATED TO BE RE-DISTURBED/DEVELOPED WITHIN SIX MONTHS, PROVIDE A TEMPORARY VEGETATIVE COVER CONSISTING OF MINNESOTA DEPARTMENT OF TRANSPORTATION (MNDOT) SEED MIXTURE 21-111 (OATS), OR 21-112 (WINTER WHEAT), AT A RATE OF 100 POUNDS PER ACRE.
    - C. IF GRADED AREA WILL NOT BE DEVELOPED FOR A PERIOD GREATER THAN SIX MONTHS, PROVIDE A SEMI-PERMANENT VEGETATIVE COVER OF SEED MIXTURE MNDOT 22-112 AT A RATE OF 40 POUNDS PER ACRE.
    - D. GRADING BONDS OR THE EQUIVALENT SECURITIES SHALL BE RETAINED UNTIL TURF HAS GERMINATED AND SURVIVED A 60-DAY GROWING PERIOD.
    - E. UNLESS SPECIFIED ELSEWHERE WITHIN THE CONSTRUCTION DOCUMENTS (I.E. ARCHITECTURAL SITE PLAN OR LANDSCAPE PLAN), PERMANENT TURF RESTORATION SHALL CONSIST OF SOD.
    - F. MULCH, HYDROMULCH, AND TACKIFIERS MAY NOT BE USED FOR STABILIZATION IN SWALES OR DRAINAGE DITCHES UNLESS THE LONGITUDINAL SLOPE IS LESS THAN 2 PERCENT.
    - G. RUNOFF SHALL BE PREVENTED FROM ENTERING ALL STORM SEWER CATCH BASINS PROVIDING THEY ARE NOT NEEDED DURING CONSTRUCTION. WHERE STORM SEWER CATCH BASINS ARE NECESSARY FOR SITE DRAINAGE DURING CONSTRUCTION, SEDIMENT PROTECTION DEVICES AS DETAILED SHALL BE INSTALLED AND MAINTAINED AROUND ALL CATCH BASINS UNTIL THE TRIBUTARY AREA TO THE CATCH BASIN IS RESTORED.
11. GRADING ACTIVITIES PROPOSED TO BEGIN AFTER OCTOBER 15 WILL REQUIRE AN APPROVED PHASING SCHEDULE. THE AREA OF LAND THAT THE CITY WILL ALLOW TO BE DISTURBED AT THIS TIME OF YEAR WILL BE SEVERELY LIMITED. THE CITY WILL ALSO REQUIRE ADDITIONAL EROSION CONTROL DEVISES, I.E., TEMPORARY SEDIMENT BASINS, DORMANT SEEDING AND HIGH RATES OF APPLICATION OF BOTH SEED AND MULCH.
12. TO MINIMIZE EROSION, ALL 3:1 SLOPES SHALL BE COVERED WITH A MN/DOT 3885 CATEGORY 20 STRAW EROSION CONTROL BLANKETS OR STAKED SOD.
13. ACCUMULATION OF ALL SEDIMENT OCCURRING IN STORM SEWERS, ALLEYS, AND CURB LINES SHALL BE REMOVED PRIOR TO, DURING AND AFTER COMPLETION OF GRADING ACTIVITIES.
14. EROSION CONTROL ITEMS AND DEVICES SHALL BE REMOVED ONLY AFTER THE AREA HAS RECEIVED FINAL STABILIZATION OR AS DIRECTED BY THE CITY.

MACDONALD & MACK ARCHITECTS
3101 East Franklin Avenue Minneapolis MN 55406
P 612.341.4051 • F 612.337.5843 • www.mmarchltd.com

BKBM ENGINEERS
6120 Earle Brown Dr., Suite 700
Minneapolis, MN 55340
Phone: (763) 843-0420
Fax: (763) 843-0421
www.bkbm.com

I hereby certify that this plan, specification, or report was prepared by me or under my direct supervision and that I am a duly Licensed Professional Engineer under the laws of the State of Minnesota.
Joel W. Maier
03/13/2023 #19181

CHASKA YARDS AT THE HISTORIC ESS SITE
Carver County Community Development Authority
217 Walnut Street North, Chaska, Minnesota 55318

DRAWN BY: WH CHECKED BY: GKD DATE: 03/13/2023 REVISION:

GRADING, DRAINAGE, AND EROSION CONTROL PLAN

C200

PASEO DESIGN NOTES:

1. BACKGROUND INFORMATION STANTEC DESIGN DATED 03-04-2022 FOR THE TH 41 CSAH 61 IMPROVEMENTS IS SHOWN.
2. AN ALTERNATIVE DESIGN FOR THE STORMWATER CONNECTION TO THIS SITE IS PROPOSED IN THIS PLAN.

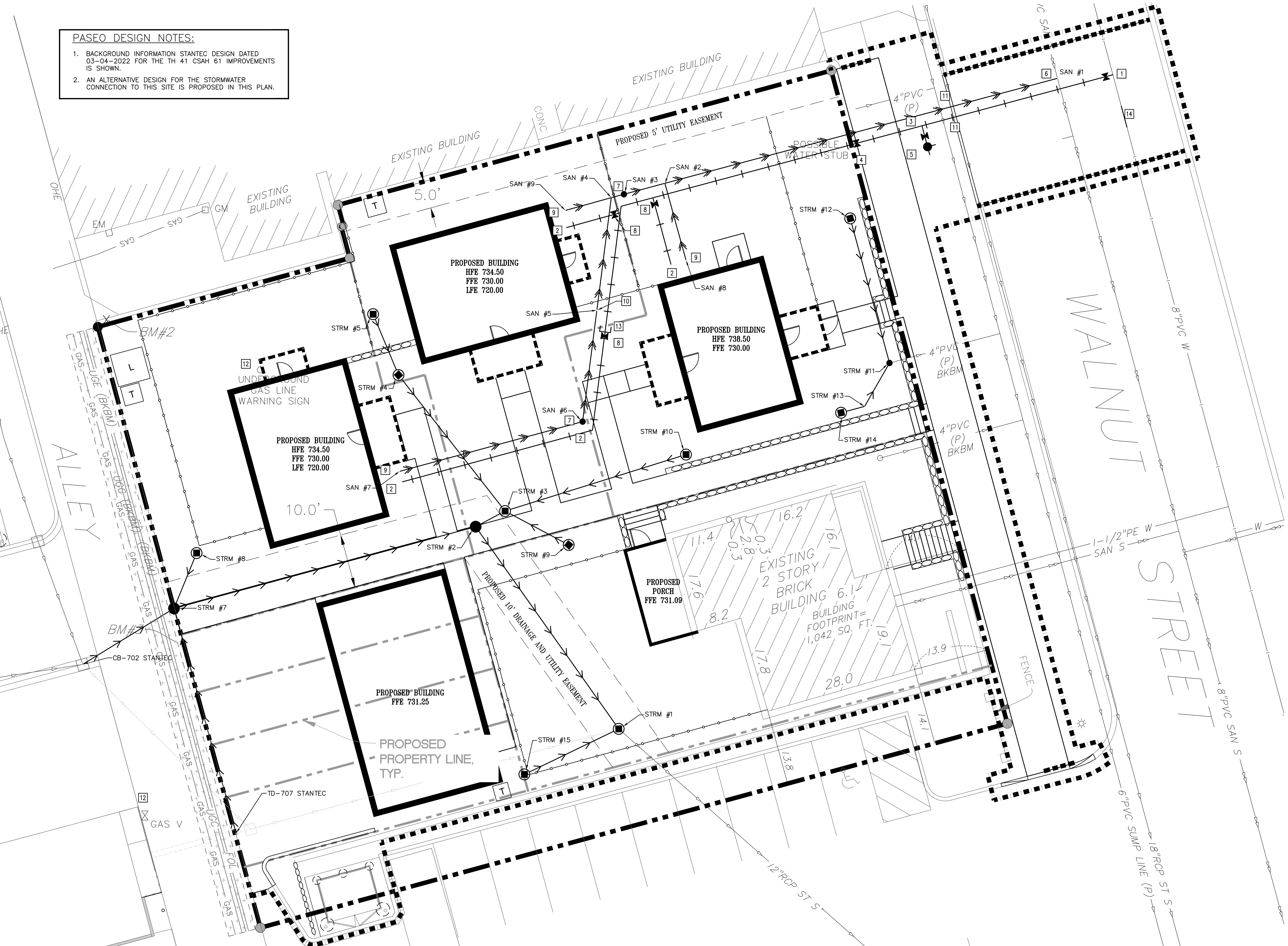

1 / C300 UTILITY PLAN 1" = 10'

ABBREVIATIONS	
BLDG	Building
BM	Benchmark
CB	Catch Basin
CONC	Concrete
ELEV	Elevation
EX	Existing
FFE	Finished Floor Elevation
HDPE	High Density Polyethylene
INV	Invert
MAX	Maximum
MH	Manhole
MIN	Minimum
PE	Polyethylene
PVC	Polyvinyl Chloride
RCP	Reinforced Concrete Pipe
RD	Roof Drain

NOTE: PRIOR TO THE START OF CONSTRUCTION, THE CONTRACTOR SHALL POTHOLE AND DETERMINE THE LOCATION AND ELEVATION OF EXISTING UNDERGROUND UTILITIES. CONTACT CIVIL ENGINEER IF EXISTING UTILITIES TO REMAIN WILL BE IMPACTED BY PROPOSED WORK.

UTILITY NOTES FOR WORK IN PUBLIC RIGHT-OF-WAY:

1. FOLLOW ALL CITY OF CHASKA STANDARDS AND SPECIFICATIONS.
2. PRIOR TO CONSTRUCTION, CONTRACTORS ARE TO COORDINATE ALL WORK WITHIN RIGHT-OF-WAY AND OBTAIN ALL APPLICABLE PERMITS.

PROPOSED PLAN SYMBOLS

CONSTRUCTION LIMITS
PROPERTY LINE
SAWCUT LINE (APPROX.)
SANITARY SEWER
WATER PIPE
STORM SEWER
RETAINING WALL
PROPOSED EASEMENT
FUTURE PROPERTY LINE
PROPOSED FENCE
GATE VALVE, OR CURB BOX AND STOP
FIRE HYDRANT
CLEANOUT
CATCH BASIN
MANHOLE

N

10' 5' 0 10' 20'
SCALE 1" = 10'

KEYED NOTES

KEYED NOTES ARE DENOTED BY [NO] ON PLAN.

1. INSTALL 8-INCH BY 8-INCH TEE AND GATE VALVE.
2. STUB 1.5-INCH PE WATER SERVICE TO BUILDING. STUB WITHIN 5-FEET OF BUILDING. **COORDINATE EXACT LOCATION AND INVERT ELEVATION WITH MECHANICAL CONTRACTOR PRIOR TO THE START OF CONSTRUCTION.**
3. INSTALL 8-INCH BY 6-INCH TEE.
4. INSTALL 8-INCH GATE VALVE.
5. INSTALL 6-INCH GATE VALVE AND HYDRANT.
6. CONTRACTOR SHALL CONNECT TO EXISTING 8-INCH PVC SANITARY SEWER WITH 8-INCH PVC WYE.
7. INSTALL SANITARY SEWER CLEAN OUT. REFER TO DETAIL 3/C5.1. REFER TO SEWER TABLE FOR ADDITIONAL FITTINGS AT THIS LOCATION.
8. INSTALL 2-INCH CORPORATION STOP AND BOX.
9. LOCATION OF PROPOSED SANITARY SEWER SERVICE. STUB WITHIN 5-FEET OF BUILDING. REFER TO SANITARY SEWER TABLE FOR INVERT ELEVATIONS AND PIPE SIZES. **COORDINATE EXACT LOCATION AND INVERT ELEVATION WITH MECHANICAL CONTRACTOR PRIOR TO THE START OF CONSTRUCTION.**
10. INSTALL 8-INCH BY 4-INCH PVC REDUCER.
11. CONTRACTOR SHALL SUPPORT EXISTING PUBLIC AND SMALL UTILITIES DURING WORK ITEMS THAT UNDERMINE EXISTING UTILITIES.
12. PRIOR TO THE START OF CONSTRUCTION, THE CONTRACTOR SHALL POTHOLE AND DETERMINE THE EXACT LOCATION AND ELEVATION OF EXISTING GAS LINE. CONTACT CIVIL ENGINEER, ARCHITECT, AND OWNER WITH FINDINGS.
13. INSTALL 8-INCH PLUG.
14. INSTALL 4-FT OF NEW 8-INCH WATERMAIN.

STORM SEWER TABLE

STRUCTURE ID	STRUCTURE DIMENSION (INCHES)	NEENAH CASTING TYPE	RIM ELEVATION	INVERT ELEVATION(S)	PIPE LENGTH, DIAMETER, SLOPE & NEXT UPSTREAM STRUCTURE
CB-702 STANTEC	CB-702 STANTEC	NA		NE = 727.13	--------
STRM #1	48" CB MH	R-2390	729.75	SE = 717.00 NW = 722.57 SW = 725.71	-------- 46 L.F. OF 12" RCP @ 2.04%, STRM #2 19 L.F. OF 8" PVC @ 1.00%, STRM #15
STRM #2	48" MH	R-1733	729.48	SE = 723.50 W = 725.36 NE = 723.50	-------- 57 L.F. OF 12" PVC @ 1.00%, STRM #7 6 L.F. OF 10" PVC @ 1.44%, STRM #3
STRM #3	48" CB MH	R-3067	729.11	SW = 723.59 NW = 724.60 SE = 723.88 E = 823.59	-------- 32 L.F. OF 8" PVC @ 3.62%, STRM #4 13 L.F. OF 8" PVC @ 3.55%, STRM #9 35 L.F. OF 4" PVC @ 1.00%, STRM #10
STRM #4	ADS Yard Drain	8" DURACAST IN-LINE GRATE	729.75	SE = 725.75 NW = 726.80	-------- 12 L.F. OF 8" PVC @ 1.00%, STRM #5
STRM #5	ADS Yard Drain	8" DURACAST IN-LINE GRATE	733.00	SE = 726.92	--------
STRM #7	48" MH	R-1733	731.60	E = 725.93 SW = 726.55 S = 725.94 N = 727.23	-------- 20 L.F. OF 12" RCP @ 2.93%, CB-702 STANTEC 43 L.F. OF 8" PVC @ 0.95%, TD-707 STANTEC 11 L.F. OF 8" PVC @ 2.47%, STRM #8
STRM #8	ADS Yard Drain	8" DURACAST IN-LINE GRATE	731.50	S = 727.50	--------
STRM #9	48" CB MH	R-2390	728.85	NW = 724.35	--------
STRM #10	ADS Yard Drain	4" DURACAST IN-LINE GRATE	824.79	W = 823.94	--------
STRM #11	4" CO	R-2390	728.95	E = 723.56 N = 724.00 SW = 723.56	-------- 28 L.F. OF 4" PVC @ 0.50%, STRM #12 9 L.F. OF 4" PVC @ 1.00%, STRM #13
STRM #12	ADS Yard Drain	4" DURACAST IN-LINE GRATE	728.50	S = 724.14	--------
STRM #13	4" PVC 45 DEGREE BEND	NA		NE = 723.65 W = 723.65	-------- 4 L.F. OF 4" PVC @ 4.24%, STRM #14
STRM #14	ADS Yard Drain	4" DURACAST IN-LINE GRATE	728.80	E = 723.84	--------
STRM #15	ADS Yard Drain	8" DURACAST IN-LINE GRATE	729.90	NE = 725.90	--------
TD-707 STANTEC	16" TRENCH DRAIN STANTEC	NA		N = 726.35	--------

SANITARY SEWER TABLE

STRUCTURE ID	STRUCTURE DIMENSION (INCHES)	NEENAH CASTING TYPE	RIM ELEVATION	INVERT ELEVATION(S)	PIPE LENGTH, DIAMETER, SLOPE & NEXT UPSTREAM STRUCTURE
SAN #1	8" PVC WYE CONNECTION TO SAN MAIN	NA		W = 716.05	75 L.F. OF 8" PVC @ 2.00%, SAN #2
SAN #2	8" BY 4" PVC WYE	NA		E = 717.54 W = 717.54 S = 717.54	-------- 8 L.F. OF 8" PVC @ 2.00%, SAN #3 16 L.F. OF 4" PVC @ 44.10%, SAN #8
SAN #3	8" PVC 45 DEGREE BEND & CO	NA	730.85	E = 717.70 W = 717.70	-------- 2 L.F. OF 8" PVC @ 2.00%, SAN #4
SAN #4	8" BY 4" PVC WYE	NA		E = 717.75 S = 717.75 W = 717.75	-------- 21 L.F. OF 8" PVC @ 1.04%, SAN #5 9 L.F. OF 4" PVC @ 4.15%, SAN #9
SAN #5	8" BY 4" PVC REDUCER	NA		N = 717.97 S = 717.97	-------- 21 L.F. OF 4" PVC @ 1.04%, SAN #6
SAN #6	8" PVC 45 DEGREE BEND & CO	NA	729.52	N = 718.18 W = 718.18	-------- 35 L.F. OF 4" PVC @ 1.04%, SAN #7
SAN #7	Sanitary Sewer Service Connection	NA		E = 718.54	--------
SAN #8	Sanitary Sewer Service Connection	NA		N = 724.00	--------
SAN #9	Sanitary Sewer Service Connection	NA		E = 718.11	--------

UTILITY NOTES:

1. CONTRACTOR SHALL FOLLOW ALL CITY OF CHASKA STANDARDS AND SPECIFICATIONS.
2. COORDINATE SERVICE CONNECTION LOCATIONS AT THE BUILDING WITH THE MECHANICAL CONTRACTOR PRIOR TO CONSTRUCTION. NO ADDITIONAL COMPENSATION WILL BE ALLOWED FOR UNCOORDINATED WORK.
3. COORDINATE UTILITY INSTALLATION WITH STRUCTURAL PRIOR TO START OF CONSTRUCTION. UTILITIES SHALL NOT BE INSTALLED WITHIN THE ZONE OF INFLUENCE OF ANY STRUCTURAL ELEMENTS. NO ADDITIONAL COMPENSATION WILL BE PROVIDED FOR UNCOORDINATED WORK.
4. ALL SEWER SERVICE CONNECTIONS WITH LESS THAN 5 FEET OF COVER OVER THE TOP OF PIPE SHALL BE INSULATED. INSULATION SHALL BE INSTALLED FROM THE CONNECTION OF THE SERVICE AT THE BUILDING TO THE POINT WHICH THE SERVICE ATTAINS 5 FEET OF COVER. CONTRACTOR SHALL OBTAIN WRITTEN PERMISSION FROM ARCHITECT OR ENGINEER PRIOR TO INSTALLATION OF INSULATION.
5. PROTECT ALL EXISTING STRUCTURES AND UTILITIES WHICH ARE NOT SCHEDULED TO BE REMOVED.
6. ALL WATER MAINS SHALL BE DUCTILE IRON PIPE, CLASS 52, UNLESS NOTED OTHERWISE.
7. ALL WATER MAIN SHALL HAVE A MINIMUM DEPTH OF COVER OF 7.5 FEET OVER TOP OF WATER MAIN.
8. PROVIDE THRUST BLOCKING ON ALL WATER MAIN PER CITY OF CHASKA. PROVIDE MECHANICAL JOINT RESTRAINTS ON ALL BENDS, VALVES, TEES, PLUGS, AND HYDRANT LEADS.
9. SANITARY SEWER PIPING SHALL BE SCHD 40 PVC UNLESS NOTED OTHERWISE.
10. STORM SEWER PIPING SHALL BE SCHD 40 POLY VINYL CHLORIDE (PVC), UNLESS NOTED OTHERWISE. ALL STORM SEWER PIPE THAT IS EXTENDED TO THE BUILDING FOR ROOF DRAIN SERVICES IS TO BE SCHEDULE 40 PVC. PVC PIPE AND FITTINGS SHALL CONFORM TO THE REQUIREMENTS OF ASTM D3034 (ASTM D2665 FOR SCHEDULE 40).
11. CONTRACTORS SHALL COORDINATE ALL WORK WITH GAS, ELECTRIC, TELEVISION AND TELEPHONE COMPANIES PRIOR TO START OF CONSTRUCTION.
12. WHERE PROPOSED GRADE OVER EXISTING SMALL UTILITIES IS PROPOSED TO BE LOWERED, CONTRACTOR SHALL COORDINATE WITH UTILITY OWNER FOR THE LOWERING OF THE EXISTING UTILITY TO PROVIDE THE MINIMUM COVER REQUIRED AT NO ADDITIONAL COST TO THE OWNER.
13. ALL PORTIONS OF THE STORM SEWER SYSTEM LOCATED WITHIN 10-FEET OF THE BUILDING OR WATER SERVICE LINE SHALL BE TESTED IN ACCORDANCE WITH MN PLUMBING CODE. PIPING MATERIAL SHALL BE SCHEDULE 40 PVC.
14. ALL JOINTS AND CONNECTIONS IN THE STORM SEWER SYSTEM SHALL BE GAS TIGHT OR WATER TIGHT IN ACCORDANCE TO MN PLUMBING CODE. APPROVED RESILIENT RUBBER JOINTS MUST BE USED TO MAKE WATER TIGHT CONNECTIONS TO MANHOLES, CATCH BASINS, AND OTHER STRUCTURES. RESILIENT WATER-STOP GROUTING RINGS ARE AN ACCEPTABLE ALTERNATIVE. CEMENT MORTAR JOINTS ARE PERMITTED ONLY FOR REPAIRS AND CONNECTIONS OF EXISTING LINES CONSTRUCTED WITH SUCH JOINTS.

MACDONALD & MACK ARCHITECTS
3101 East Franklin Avenue Minneapolis MN 55406
P 612.341.4051 • F 612.337.5843 • www.mmarchltd.com

I hereby certify that this plan, specification, or report was prepared by me or under my direct supervision and that I am a duly Licensed Professional Engineer under the laws of the State of Minnesota.
Joel W. Maier
03/13/2023 #19181

BKBM ENGINEERS
6120 Earle Brown Dr., Suite 700
Minneapolis, MN 55340
Phone: (763) 843-0420
Fax: (763) 843-0421
www.bkbm.com

CHASKA YARDS AT THE HISTORIC ESS SITE
Carver County Community Development Authority
217 Walnut Street North, Chaska, Minnesota 55318

DRAWN BY: WH CHECKED BY: GKD DATE: 03/13/2023 REVISION:

UTILITY PLAN

C300

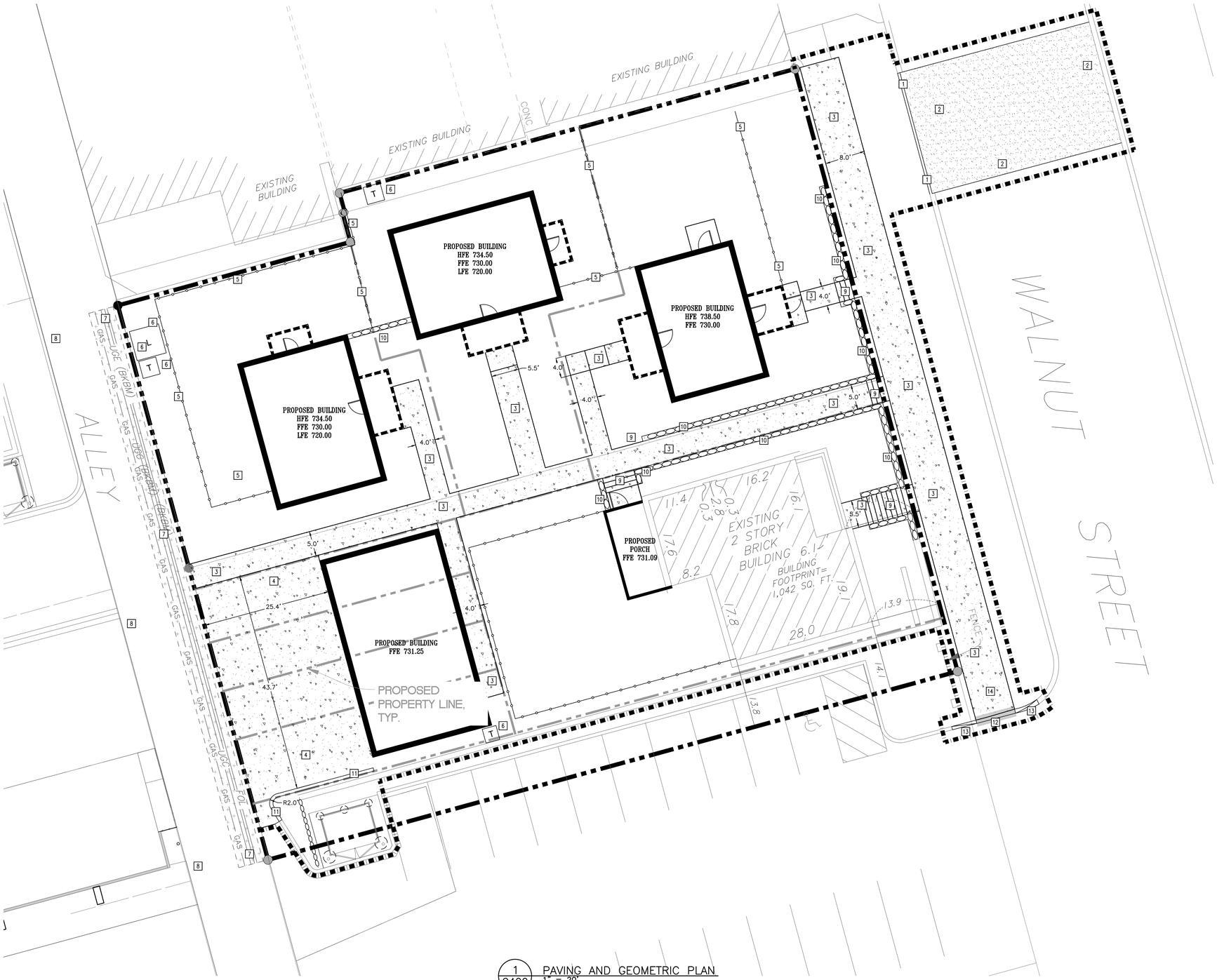

1 / C400 PAVING AND GEOMETRIC PLAN
1" = 20'

ABBREVIATIONS	
FFE	Finished Floor Elevation
LFE	Lower Floor Elevation
MAX	Maximum
MIN	Minimum
R	Radius
TYP.	Typical
MNMUTCD	Minnesota Manual on Uniform Traffic Control Devices

PROPOSED PLAN SYMBOLS

- CONSTRUCTION LIMITS
- PROPERTY LINE
- RETAINING WALL
- FUTURE PROPERTY LINE
- PROPOSED FENCE
- FLAT CURB
- BITUMINOUS PAVEMENT
- CONCRETE PAVEMENT/SIDEWALK
- JOINT UTILITY TRENCH
- CHASKA ELECTRICAL TRENCH

N

10' 5' 0 10' 20'
SCALE 1" = 10'

KEYED NOTES

KEYED NOTES ARE DENOTED BY NO ON PLAN.

1. INSTALL MODIFIED B612 MODIFIED PARKBOARD VERTICAL CONCRETE CURB AND GUTTER. REFER TO DETAIL 5/C501.
2. INSTALL BITUMINOUS PAVEMENT. REFER TO DETAIL 6/C501.
3. INSTALL CONCRETE WALK. REFER TO DETAIL 6/C501.
4. INSTALL CONCRETE PAVEMENT. REFER TO DETAIL 7/C501.
5. INSTALL FENCE. REFER TO ARCHITECTURAL PLANS AND DETAILS.
6. APPROXIMATE LOCATION OF ELECTRICAL AND COMMUNICATION BOXES. REFER TO SMALL UTILITY PLANS FOR EXACT LOCATIONS.
7. JOINT TRENCH FOR COMCAST, LUMEN TELEPHONE, AND CENTERPOINT GAS. CONTRACTOR TO CONTACT GSOC TO CONFIRM LOCATION OF SMALL UTILITIES.
8. EXISTING UNDERGROUND CHASKA ELECTRIC TRENCH. CONTRACTOR TO CONTACT GSOC TO CONFIRM LOCATION OF SMALL UTILITIES.
9. INSTALL CONCRETE STEPS. REFER TO DETAIL 8/C501.
10. DRY STACKED LIMESTONE WALL. REFER TO LANDSCAPE ARCHITECT'S DRAWING
11. INSTALL CURB WALL. REFER TO DETAIL 2/C502.
12. INSTALL FLAT CURB SECTION. REFER TO DETAIL 3/C502.
13. INSTALL NOSE DOWN CURB SECTION. REFER TO DETAIL 4/C502.
14. INSTALL MNDOT PEDESTRIAN CURB RAMP. REFER TO DETAIL 5/C502 AND GRADING PLAN.

PAVING NOTES:

1. CONTRACTOR SHALL FOLLOW ALL CITY OF CHASKA STANDARDS AND SPECIFICATIONS.
2. ALL DIMENSIONS ARE TO FACE OF CURB UNLESS NOTED OTHERWISE.
3. ALL CURB AND GUTTER IS TO BE B612 CONCRETE CURB AND GUTTER UNLESS NOTED OTHERWISE.
4. NO SIDEWALK IS TO HAVE MORE THAN A 2% CROSS SLOPE OR MORE THAN A 5% LONGITUDINAL SLOPE.
5. REFER TO ARCHITECTURAL PLANS FOR PROPOSED BUILDING LAYOUT.
6. FOLLOW ALL CITY OF CHASKA RULES, REGULATIONS, AND SPECIFICATIONS WHEN WORKING IN PUBLIC RIGHT OF WAY.
7. REFER TO STRUCTURAL PLANS FOR STOOP DETAILS. ALL WALKS ARE TO BE CENTERED ON THE DOORS.
8. INSTALL APPROPRIATE EXPANSION MATERIAL WHERE CONCRETE IS ADJACENT TO BUILDING FACE.
9. ALL EXPANSION AND ISOLATION JOINTS SHALL BE SEALED PER SPECIFICATIONS.
10. MATCH NEW PAVEMENT, CURB AND GUTTER, AND SIDEWALK INTO EXISTING. NO ABRUPT GRADE TRANSITIONS OR PONDING OF WATER WILL BE ALLOWED.
11. SAWCUT EXISTING PAVEMENT, SIDEWALK, AND CURB AND GUTTER TO NEAREST JOINT. COORDINATE REMOVAL LIMITS WITH SITE DEMOLITION CONTRACTOR AND CONSTRUCTION MANAGER.

MACDONALD & MACK ARCHITECTS
3101 East Franklin Avenue Minneapolis, MN 55406
P 612.341.4051 · F 612.237.5843 · www.mmarchitd.com

Plans, and the ideas, designs, arrangements and plans represented by these documents are the property of MacDonald & Mack Architects and shall not be used in whole or in part for any purpose or project other than that for which they are prepared.

Issue Date	Job #	Scale
03/13/2023	2021-02	1" = 20'

BKBM ENGINEERS
6120 Earle Brown Dr.,
Suite 700
Minneapolis, MN 55340
Phone: (763) 843-0420
Fax: (763) 843-0421
www.bkbm.com

CHASKA YARDS AT THE HISTORIC ESS SITE
Carver County Community Development Authority
217 Walnut Street North, Chaska, Minnesota 55318

DRAWN BY: WH CHECKED BY: CKD DATE: 03/13/2023 REVISION:

PAVING AND GEOMETRIC PLAN

C400

C401 TURNING MOVEMENT ANALYSIS
1" = 20'

ABBREVIATIONS	
FFE	Finished Floor Elevation
LFE	Lower Floor Elevation
MAX	Maximum
MIN	Minimum
R	Radius
TYP.	Typical
MNMUTCD	Minnesota Manual on Uniform Traffic Control Devices

PROPOSED PLAN SYMBOLS
CONSTRUCTION LIMITS
PROPERTY LINE
RETAINING WALL
FUTURE PROPERTY LINE
PROPOSED FENCE
FLAT CURB
BITUMINOUS PAVEMENT
CONCRETE PAVEMENT/SIDEWALK
JOINT UTILITY TRENCH
CHASKA ELECTRICAL TRENCH

VEHICLE COLORS	
BLUE	FRONT TIRES
GREEN	VEHICLE BODY
BLACK	REAR TIRES

N

10' 5' 0 10' 20'

SCALE 1" = 10'

MACDONALD & MACK ARCHITECTS
3101 East Franklin Avenue Minneapolis, MN 55406
P 612.341.4051 - F 612.237.5843 - www.mmarchitect.com

Plans, and the ideas, specifications, or designs contained in these plans are the exclusive property of MacDonald & Mack Architects and shall not be used in whole or in part without written permission of the Architect of Record.

Set # 2 Issue 4/13/22

BKBM ENGINEERS
6120 Earle Brown Dr.,
Suite 700
Minneapolis, MN 55340
Phone: (763) 843-0420
Fax: (763) 843-0421
www.bkbm.com

CHASKA YARDS AT THE HISTORIC ESS SITE
Carver County Community Development Authority
217 Walnut Street North, Chaska, Minnesota 55318

DRAWN BY: WH CHECKED BY: GKD DATE: 03/17/2022 REVISION:

TURNING MOVEMENT ANALYSIS

C401

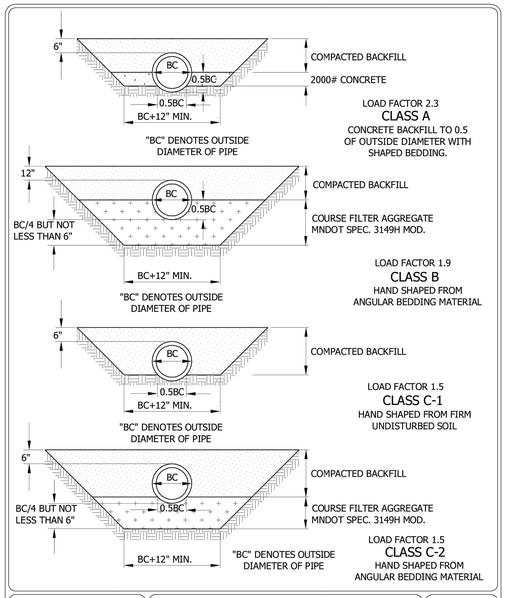

Stantec
2335 Highway 36 W
St. Paul, MN 55113
www.stantec.com

BEDDING METHODS FOR RCP OR DIP

CHASKA, MINNESOTA

LAST REVISION: MARCH 2001

PLATE NO. GEN-6

7 C500 PIPE BEDDING
NOT TO SCALE

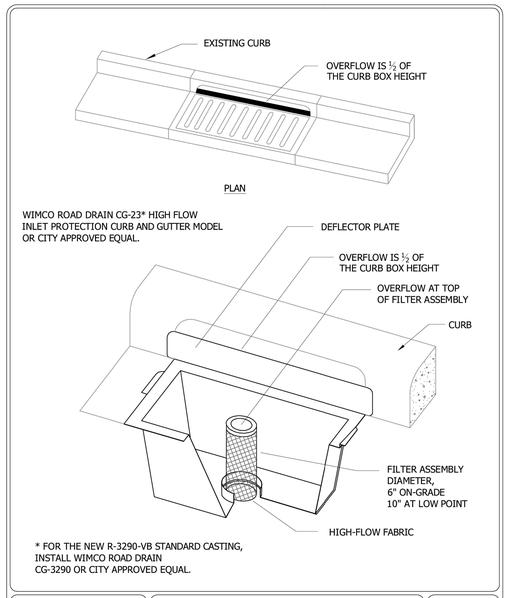

Stantec
2335 Highway 36 W
St. Paul, MN 55113
www.stantec.com

INLET PROTECTION - CATCH BASIN INSERT AFTER CURB CONSTRUCTION

CHASKA, MINNESOTA

LAST REVISION: APRIL 2008

PLATE NO. ERO-4B

5 C500 INLET PROTECTION
NOT TO SCALE

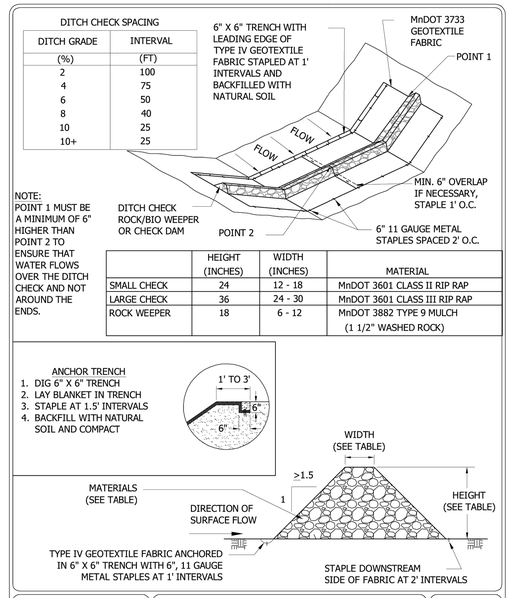

	HEIGHT (INCHES)	WIDTH (INCHES)	MATERIAL
SMALL CHECK	24	12 - 18	MnDOT 3601 CLASS II RIP RAP
LARGE CHECK	36	24 - 30	MnDOT 3601 CLASS III RIP RAP
ROCK WEEPER	18	6 - 12	MnDOT 3882 TYPE 9 MULCH (1 1/2" WASHED ROCK)

Stantec
2335 Highway 36 W
St. Paul, MN 55113
www.stantec.com

DITCH CHECK / WEEPER SIZING AND MATERIALS

CHASKA, MINNESOTA

LAST REVISION: APRIL 2008

PLATE NO. ERO-5

3 C500 BIO LOG
NOT TO SCALE

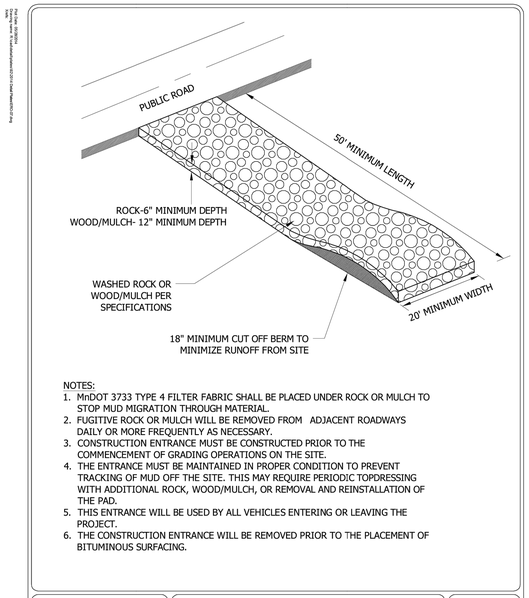

NOTES:
1. MnDOT 3733 TYPE 4 FILTER FABRIC SHALL BE PLACED UNDER ROCK OR MULCH TO STOP MUD MIGRATION THROUGH MATERIAL.
2. FUGITIVE ROCK OR MULCH WILL BE REMOVED FROM ADJACENT ROADWAYS DAILY OR MORE FREQUENTLY AS NECESSARY.
3. CONSTRUCTION ENTRANCE MUST BE CONSTRUCTED PRIOR TO THE COMMENCEMENT OF GRADING OPERATIONS ON THE SITE.
4. THE ENTRANCE MUST BE MAINTAINED IN PROPER CONDITION TO PREVENT TRACKING OF MUD OFF THE SITE. THIS MAY REQUIRE PERIODIC TOPDRESSING WITH ADDITIONAL ROCK, WOOD/MULCH, OR REMOVAL AND REINSTALLATION OF THE PAD.
5. THIS ENTRANCE WILL BE USED BY ALL VEHICLES ENTERING OR LEAVING THE PROJECT.
6. THE CONSTRUCTION ENTRANCE WILL BE REMOVED PRIOR TO THE PLACEMENT OF BITUMINOUS SURFACING.

Stantec
2335 Highway 36 W
St. Paul, MN 55113
www.stantec.com

ROCK CONSTRUCTION ENTRANCE

CHASKA, MINNESOTA

LAST REVISION: APRIL 2008

PLATE NO. ERO-7

1 C500 CONSTRUCTION ENTRANCE
NOT TO SCALE

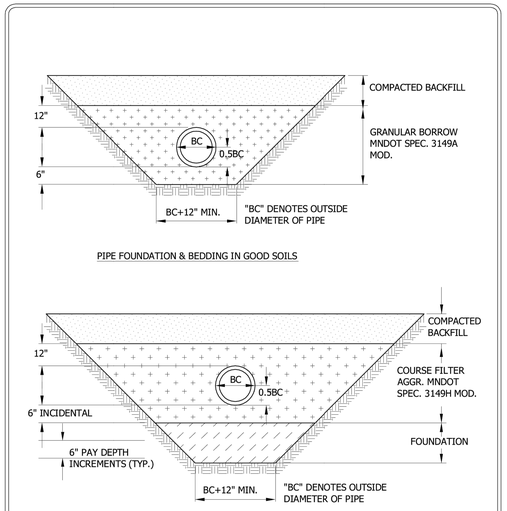

Stantec
2335 Highway 36 W
St. Paul, MN 55113
www.stantec.com

BEDDING METHODS FOR PVC

CHASKA, MINNESOTA

LAST REVISION: MARCH 2008

PLATE NO. GEN-7

8 C500 PVC PIPE BEDDING
NOT TO SCALE

DEVICES TO BE INSTALLED IMMEDIATELY UPON INSTALLATION OF CONCRETE STRUCTURE CONE OR TOP SLAB.

DEVICES SHOWN ARE AS MANUFACTURED BY WIMCO. MODEL NO. OF UNIT SHOWN: RD 27.

OTHER APPROVED INLET PROTECTION DEVICES FOR BEEHIVE CASTINGS ARE:
- ROYAL ENTERPRISES - MODEL NO 27 INFRASAFE SEDIMENT CONTROL BARRIER - DG.
- PRE MANUFACTURED UNIT BY CIRCLE "H" ENTERPRISES.

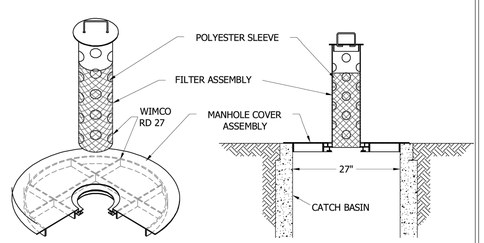

Stantec
2335 Highway 36 W
St. Paul, MN 55113
www.stantec.com

INLET PROTECTION BEEHIVE CASTING

CHASKA, MINNESOTA

LAST REVISION: APRIL 2008

PLATE NO. ERO-4C

6 C500 INLET PROTECTION
NOT TO SCALE

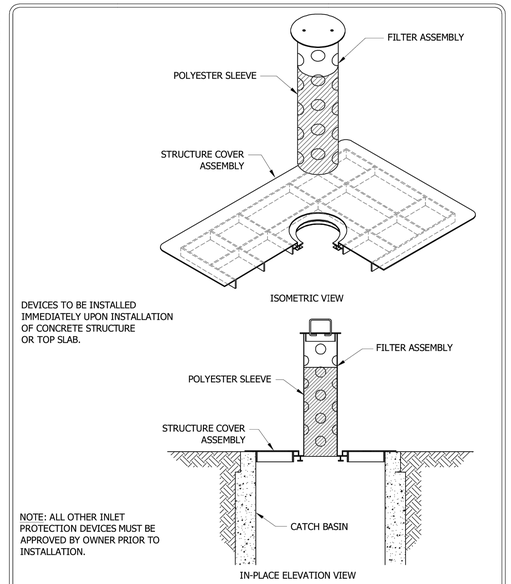

Stantec
2335 Highway 36 W
St. Paul, MN 55113
www.stantec.com

INLET PROTECTION FOR CATCH BASIN BEFORE CURB CONSTRUCTION

CHASKA, MINNESOTA

LAST REVISION: APRIL 2008

PLATE NO. ERO-4A

4 C500 INLET PROTECTION
NOT TO SCALE

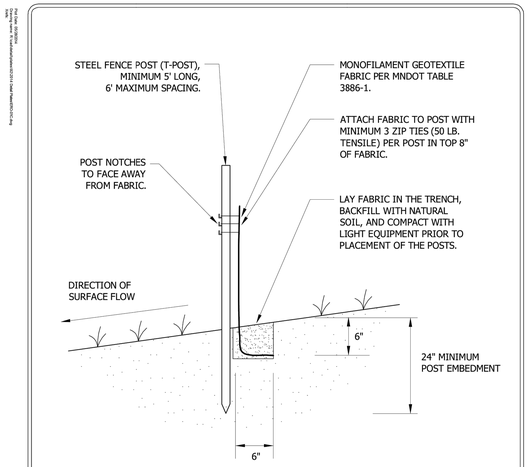

NOTES:
1. SPLICING WILL BE MADE AT OPPOSING SILT FENCE POSTS BY PLACING POSTS AND SILT FENCE NEXT TO EACH OTHER AND ROTATING 360°.
2. SILT FENCE IS MACHINE SLICED TYPE SILT FENCE THAT IS HAND INSTALLED IN AREAS INACCESSIBLE TO EQUIPMENT DUE TO SPACE LIMITATIONS, WET SOILS, STEEP SLOPES, ETC.

Stantec
2335 Highway 36 W
St. Paul, MN 55113
www.stantec.com

SILT FENCE STANDARD

CHASKA, MINNESOTA

LAST REVISION: APRIL 2008

PLATE NO. ERO-1C

2 C500 SILT FENCE
NOT TO SCALE

MacDonald & Mack Architects
3101 East Franklin Avenue Minneapolis, MN 55406
P 612.341.4051 - F 612.237.5843 - www.mmarchitd.com

Plans and/or Specs as specified herein or shown on the drawings are the property and shall remain the property of the Architect whether the project for which they are intended is executed or not. Reproduction or publication of these plans and specifications without the express written consent of the Architect is prohibited.

BKBM ENGINEERS
6120 Earle Brown Dr., Suite 700
Minneapolis, MN 55340
Phone: (763) 843-0420
Fax: (763) 843-0421
www.bkbm.com

CHASKA YARDS AT THE HISTORIC ESS SITE
Carver County Community Development Authority
217 Walnut Street North, Chaska, Minnesota 55318

DATE: 03/13/2023 REVISION:
DRAWN BY: WH CHECKED BY: GBD

CIVIL DETAILS

C500

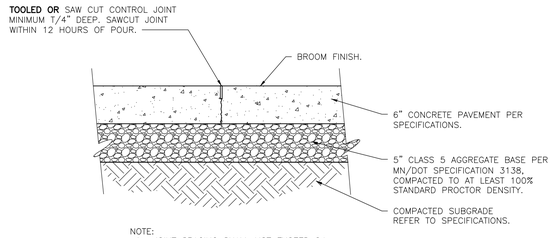

NOTE:
1: JOINT SPACING SHALL NOT EXCEED 24 TIMES THE PAVEMENT THICKNESS WITH A MAXIMUM OF 12 FEET.

7 / C501 CONCRETE PAVEMENT
NOT TO SCALE

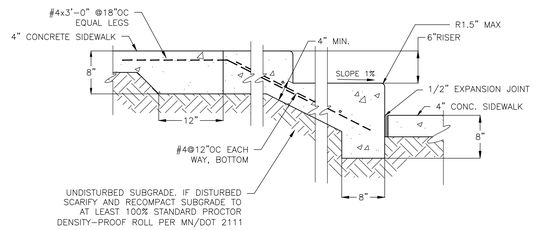

1. ALL REBAR TO BE EPOXY COATED.
2. ALL REBAR TO BE COVERED BY 2" CONCRETE.
3. CONCRETE SURFACING TO BE MEDIUM BROOM FINISH PERPENDICULAR TO PEDESTRIAN CIRCULATION.
4. REFER TO GRADING PLAN FOR NUMBER OF STAIRS AND HEIGHT.

8 / C501 CONCRETE STEP
NOT TO SCALE

6 / C501 STREET SECTION
NOT TO SCALE

PLOT DATE: 03/07/2023
NAME: Kevin.Fischer
TIME:
DWG: C:\PW\Stantec\ACCDOCS\CHASKA YARDS AT THE HISTORIC ESS SITE\22139310\Civil\Plans\C501.dwg

CONCRETE MATERIALS AS FOLLOWS:
3F52 - MANUAL PLACEMENT
3F32 - SLIP FORM PLACEMENT

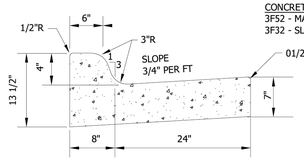

MND0T B424

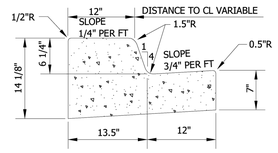

B612 MODIFIED PARKBOARD

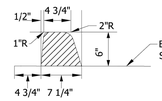

TYPE "D" STANDARD SECTION 6" MACHINCE LAID CURB

Stantec
2335 Highway 36 W
St. Paul, MN 55113
www.stantec.com

NON STARDARD CURB AND GUTTER
CHASKA, MINNESOTA

LAST REVISION: APRIL 2016
PLATE NO. STR-1A

5 / C501 INLET PROTECTION
NOT TO SCALE

PLOT DATE: 03/07/2023
NAME: Kevin.Fischer
TIME:
DWG: C:\PW\Stantec\ACCDOCS\CHASKA YARDS AT THE HISTORIC ESS SITE\22139310\Civil\Plans\C501.dwg

NOTE:
CLEANOUT CAP SHALL BE THREADED MALLEABLE IRON (GALVANIZED)

NOTE:
ENCLOSE LONG SWEEP BEND OR COMBINATION WYE IN CONCRETE AS SHOWN.

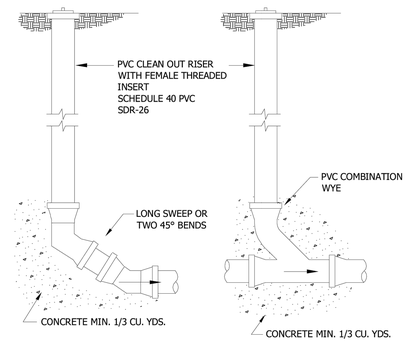

END OF LINE CLEANOUT

IN LINE CLEANOUT

NOTE:
CLEANOUT IS REQUIRED FOR EVERY 100 FEET OF SERVICE LENGTH.

NOTE:
1. IF CLEAN OUT IS IN DRIVEWAY, CONTRACTOR MUST INSTALL FORD A-1 CASTING, MARKED WITH "SEWER" ON LID.
2. IF VALVE BOX IS IN ROADWAY, CONTRACTOR MUST INSTALL TOP SECTION OF A VALVE BOX WITH LID MARKED "SEWER".

Stantec
2335 Highway 36 W
St. Paul, MN 55113
www.stantec.com

SERVICE LINE CLEANOUTS
CHASKA, MINNESOTA

LAST REVISION: MARCH 2001
PLATE NO. SER-4

3 / C501 SERVICE LINE CLEANOUT
NOT TO SCALE

PLOT DATE: 03/07/2023
NAME: Kevin.Fischer
TIME:
DWG: C:\PW\Stantec\ACCDOCS\CHASKA YARDS AT THE HISTORIC ESS SITE\22139310\Civil\Plans\C501.dwg

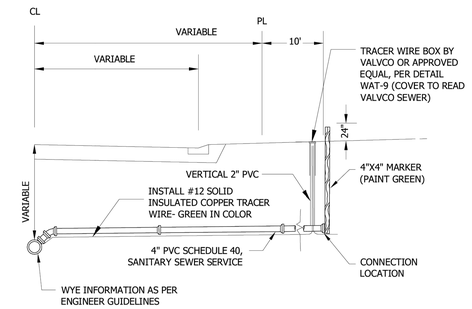

NOTES:
1. SEWER SERVICES, 4" SCHEDULE 40 PVC SEWER PIPE
2. SLOPE - 1/4" PER FOOT MINIMUM.
3. PIPE JOINTS SHALL BE NON GASKETED, SOLVENT WELD TYPE.
4. ALL PIPE SHALL BE BEDDED IN GRANULAR BORROW 3149.2B1 EXCEPT THE LAST TEN FEET WHERE COARSE FILTER AGGREGATE (3149.2H) AGGREGATE WILL BE REQUIRED.
5. BENDS OF 45° OR LESS SHALL BE USED WITHIN THE LAST 5' OF THE SERVICE IF THE DEPTH OF THE SERVICE WOULD EXCEED 10'.
6. NO SERVICE RISERS LESS THAN 3 FEET SHALL BE PERMITTED.
7. A SEPARATE TRACER WIRE WILL EXTEND FROM THE FINISH GRADE AT TRACER WIRE BOX AND FOLLOW SEWER SERVICE TO STRUCTURE FOUNDATION. TRACER WIRE FROM BOX TO FOUNDATION BY OTHERS.
8. FOR DEPTHS GREATER THAN 22', SERVICE PIPE SHALL BE C900 FROM MAIN TO CONNECTION, WITH TRANSITION FITTING FROM C900 TO SCH 40 INSTALLED AT CONNECTION LOCATION.

Stantec
2335 Highway 36 W
St. Paul, MN 55113
www.stantec.com

SEWER SERVICE CONNECTION
CHASKA, MINNESOTA

LAST REVISION: APRIL 2016
PLATE NO. SER-1

1 / C501 SANITARY SEWER CONNECTION
NOT TO SCALE

PLOT DATE: 03/07/2023
NAME: Kevin.Fischer
TIME:
DWG: C:\PW\Stantec\ACCDOCS\CHASKA YARDS AT THE HISTORIC ESS SITE\22139310\Civil\Plans\C501.dwg

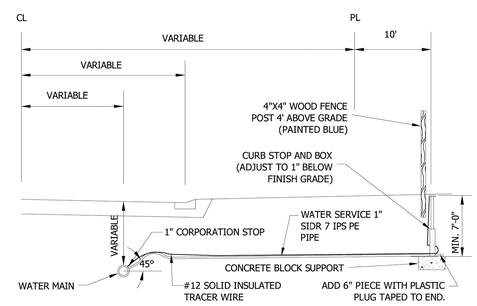

PVC WATER MAIN
STAINLESS STEEL
SERVICE SADDLE
SMITH-BLAIR 372 OR
APPROVED EQUAL

NOTE: FOR SERVICES LARGER THAN 1" A TAPPING SLEEVE IS REQUIRED. ROCKWELL TYPE 230, FULL CIRCLE, WITH TAP THREADED FOR APPROPRIATE SIZE COPPER CORPORATION STOP. (OR EQUAL)

CORPORATION STOP	CURB STOP	CURB BOX
MUELLER B25009N	MUELLER B25222N	MUELLER H-10300-N OR H-10302-N
FORD FB1001-4Q	FORD B66444MQ	FORD EM2-75-56R-NL OR EM2-75-57R-NL
A.Y. MCDONALD 74704B	A.Y. MCDONALD 76104	A.Y. MCDONALD 75615 OR 75614

NOTES:
1. CURB BOX SHALL HAVE A STATIONARY ROD.
2. CURB BOX SHALL EXTEND FROM 78" TO 90".
3. ALL PIPE SHALL BE BEDDED IN GRANULAR BORROW 3149.2B1 EXCEPT THE LAST TEN FEET WHERE COARSE FILTER AGGREGATE (3149.2H) WILL BE REQUIRED.
4. IF CURB STOP IS IN DRIVEWAY, CONTRACTOR MUST INSTALL A FORD A-1 CASTING, MARKED WITH "WATER" ON LID.
5. CURB BOX LID SHALL BE MUELLER #89375 "TW" OR EQUAL.
6. ALL BRASS FITTINGS SHALL BE "NO LEAD BRASS".
7. PIPE INSERT STIFFENERS REQUIRED FOR FITTING CONNECTIONS.
8. HDPE SERVICE PIPE SHALL BE MANUFACTURED BY ENDOPURE OR BLUE ULTRA PIPE.

Stantec
2335 Highway 36 W
St. Paul, MN 55113
www.stantec.com

WATER SERVICE CONNECTION
HDPE PIPE
CHASKA, MINNESOTA

LAST REVISION: MARCH 2016
PLATE NO. SER-2A

4 / C501 WATER SERVICE CONNECTION
NOT TO SCALE

PLOT DATE: 03/07/2023
NAME: Kevin.Fischer
TIME:
DWG: C:\PW\Stantec\ACCDOCS\CHASKA YARDS AT THE HISTORIC ESS SITE\22139310\Civil\Plans\C501.dwg

PVC PIPE
BED AND ENCASE IN SELECT GRANULAR, TYPICAL PVC APPLICATION.

SERVICE RISERS FOR SEWER MAINS LESS THAN 22' SHALL BE SCHEDULE 40 PVC (SOLVENT WELD JOINTS).
FOR DEPTHS GREATER THAN 22', SERVICE PIPE SHALL BE C900 FROM MAIN TO CONNECTION WITH TRANSITION FITTING FROM C900 TO SCH 40 INSTALLED AT CONNECTION LOCATION.

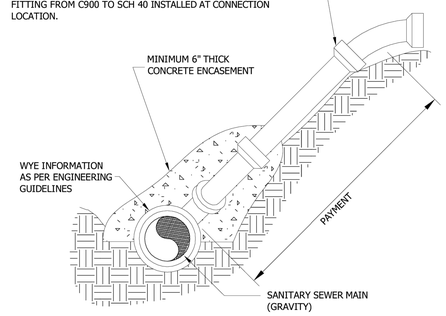

Stantec
2335 Highway 36 W
St. Paul, MN 55113
www.stantec.com

SERVICE RISER
CHASKA, MINNESOTA

LAST REVISION: MARCH 2016
PLATE NO. SER-3

2 / C501 SANITARY SERVICE RISER
NOT TO SCALE

MACDONALD & MACK ARCHITECTS
3101 East Franklin Avenue Minneapolis, MN 55406
P 612.341.4051 · F 612.337.3843 · www.mmarchitd.com

Plans, specifications, reports, and data prepared for this project are intended solely for use on this project in accordance with agreement between Client and Consultant. Any other use or reuse is prohibited without the express written consent of the Consultant.

BKBM ENGINEERS
6120 Earle Brown Dr., Suite 700
Minneapolis, MN 55340
Phone: (763) 843-0420
Fax: (763) 843-0421
www.bkbm.com

CHASKA YARDS AT THE HISTORIC ESS SITE
Carver County Community Development Authority
217 Walnut Street North, Chaska, Minnesota 55318

DATE: 03/13/2023 REVISION:
DRAWN BY: MH CHECKED BY: CAD

CIVIL DETAILS

C501

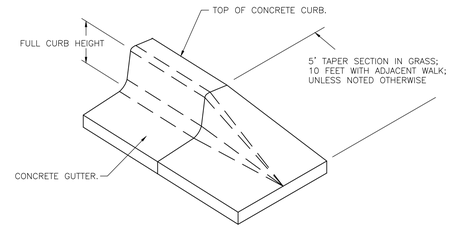

4 C502 NOSE-DOWN CURB SECTION
NOT TO SCALE

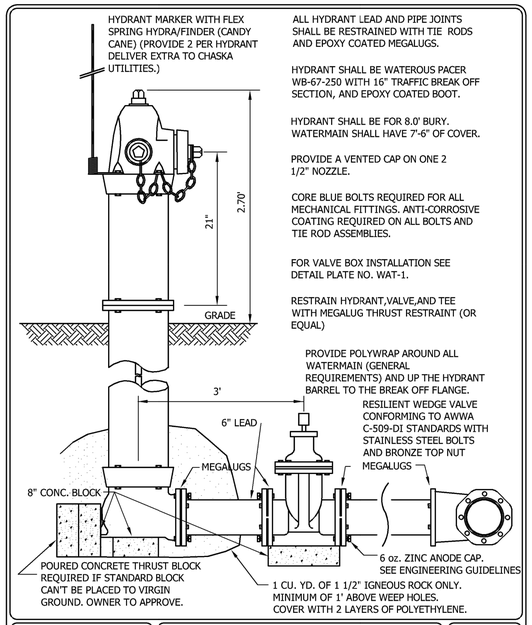

ALL HYDRANT LEAD AND PIPE JOINTS SHALL BE RESTRAINED WITH TIE RODS AND EPOXY COATED MEGALUGS.

HYDRANT SHALL BE WATEROUS PACER WB-67-250 WITH 16" TRAFFIC BREAK OFF SECTION, AND EPOXY COATED BOOT.

HYDRANT SHALL BE FOR 8.0' BURY. WATERMAIN SHALL HAVE 7'-6" OF COVER.

PROVIDE A VENTED CAP ON ONE 2 1/2" NOZZLE.

CORE BLUE BOLTS REQUIRED FOR ALL MECHANICAL FITTINGS. ANTI-CORROSIVE COATING REQUIRED ON ALL BOLTS AND TIE ROD ASSEMBLIES.

FOR VALVE BOX INSTALLATION SEE DETAIL PLATE NO. WAT-1.

RESTRAIN HYDRANT,VALVE,AND TEE WITH MEGALUG THRUST RESTRAINT (OR EQUAL)

PROVIDE POLYWRAP AROUND ALL WATERMAIN (GENERAL REQUIREMENTS) AND UP THE HYDRANT BARREL TO THE BREAK OFF FLANGE.

RESILIENT WEDGE VALVE CONFORMING TO AWWA C-509-D1 STANDARDS WITH STAINLESS STEEL BOLTS AND BRONZE TOP NUT

Stantec
733 Marquette Ave Suite 1000
Minneapolis, MN 55402
www.stantec.com

WATEROUS PACER HYDRANT AND VALVE INSTALLATION

CHASKA, MINNESOTA

LAST REVISION: MARCH 2019

PLATE NO. WAT-2

1 C502 WATEROUS PACER HYDRANT AND VALVE INSTALLATION
NOT TO SCALE

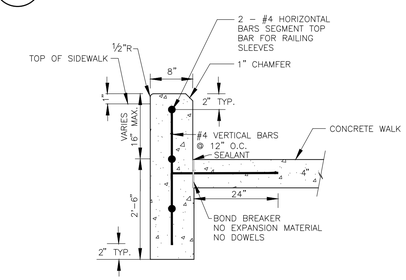

2 C502 6-INCH WIDE CURB WALL
NOT TO SCALE

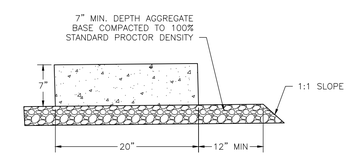

NOTE:

1. CURB SECTION IS TO SLOPE TOWARD PARKING LOT PER GRADING PLAN. TRANSITION INTO B612 CURBING USING NOSE-DOWN CURB SECTION.

3 C502 FLAT CURB/CONCRETE EDGER
NOT TO SCALE

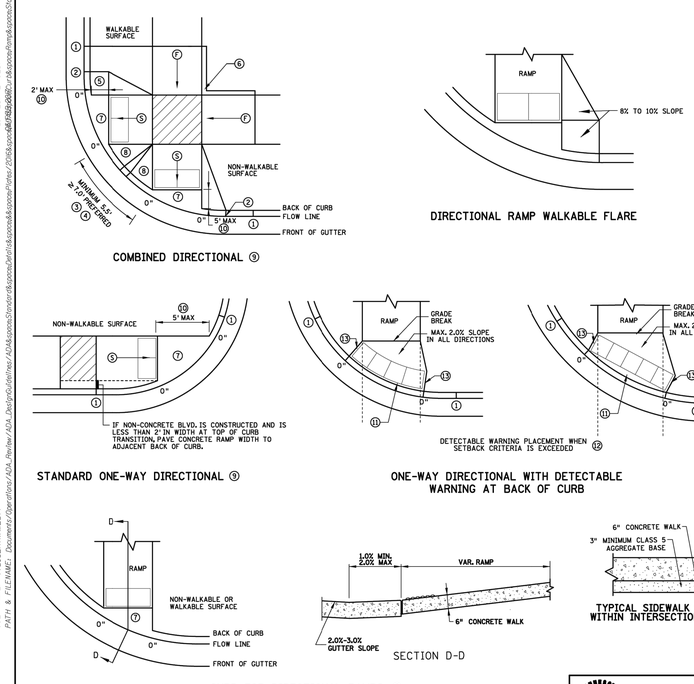

NOTES:

LANDINGS SHALL BE LOCATED ANYWHERE THE PEDESTRIAN ACCESS ROUTE (PAR) CHANGES DIRECTION, AT THE TOP OF RAMPS THAT HAVE RUNNING SLOPES GREATER THAN 5.0%, AND IF THE APPROACHING WALK IS INVERSE GRADE.

INITIAL CURB RAMP LANDINGS SHALL BE CONSTRUCTED WITHIN 15' FROM THE BACK OF CURB, WITH 6' FROM THE BACK OF CURB BEING THE PREFERRED DISTANCE, ONLY APPLICABLE WHEN THE INITIAL RAMP RUNNING SLOPE IS OVER 5.0%.

SECONDARY CURB RAMP LANDINGS ARE REQUIRED FOR EVERY 30" OF VERTICAL RISE WHEN THE LONGITUDINAL SLOPE IS GREATER THAN 5.0%.

CONTRACTION JOINTS SHALL BE CONSTRUCTED ALONG ALL GRADE BREAKS WITHIN THE PAR. 1/4" DEEP VISUAL JOINTS SHALL BE USED AT THE TOP GRADE BREAK OF CONCRETE FLARES ADJACENT TO WALKABLE SURFACES.

ALL GRADE BREAKS WITHIN THE PAR SHALL BE PERPENDICULAR TO THE PATH OF TRAVEL. THUS BOTH SIDES OF A SLOPED WALKING SURFACE MUST BE EQUAL LENGTH.

TO ENSURE INITIAL RAMPS AND INITIAL LANDINGS ARE PROPERLY CONSTRUCTED, LANDINGS SHALL BE CAST SEPARATELY. FOLLOW SIDEWALK REINFORCEMENT DETAILS ON SHEET 6 AND THE ADA SPECIAL PROVISION (PROSECUTION OF WORK).

TOP OF CURB SHALL MATCH PROPOSED ADJACENT WALK GRADE.

WHEN THE BOULEVARD IS 4' WIDE OR LESS, THE TOP OF CURB TAPER SHALL MATCH THE RAMP SLOPES TO REDUCE NEGATIVE BOULEVARD SLOPES FROM THE TOP BACK OF CURB TO THE PAR.

ALL RAMP TYPES SHOULD HAVE A MINIMUM 3' LONG RAMP LENGTH.

4' MINIMUM WIDTH OF DETECTABLE WARNING IS REQUIRED FOR ALL RAMPS. DETECTABLE WARNINGS SHALL CONTINUOUSLY EXTEND FOR A MIN. OF 24" IN THE PATH OF TRAVEL. DETECTABLE WARNING TO COVER ENTIRE WIDTH OF SHARED-USE PATH AND THE ENTIRE PAR WIDTH OF THE WALK. DETECTABLE WARNING SHOULD BE 6" LESS THAN THE PAR/PATH WIDTH. ARC LENGTH OF RADIAL DETECTABLE WARNINGS SHOULD NOT BE GREATER THAN 20 FEET.

RADIAL DETECTABLE WARNINGS SHALL BE SETBACK 3" MINIMUM TO 6" MAXIMUM FROM THE BACK OF CURB. SEE NOTES (10) & (11) FOR INFORMATION REGARDING RECTANGULAR DETECTABLE WARNING PLACEMENT.

(1) MATCH FULL CURB HEIGHT.
(2) 3" HIGH CURB WHEN USING A 3' LONG RAMP
4" HIGH CURB WHEN USING A 4' LONG RAMP.
(3) 3" MINIMUM CURB HEIGHT (5.5' MIN. DISTANCE REQUIRED BETWEEN DOMES)
4" PREFERRED (7' MIN. DISTANCE REQUIRED BETWEEN DOMES).
(4) THE "BUMP" IN BETWEEN THE RAMPS SHOULD NOT BE IN THE PATH OF TRAVEL FOR COMBINED DIRECTIONAL RAMPS. IF THIS OCCURS MODIFY THE RAMP LOCATION OR SWITCH RAMP TO A FAN/DEPRESSED CORNER.
(5) WHEN USING CONCRETE PAVED FLARES ON THE OUTSIDE OF DIRECTIONAL RAMPS, AND ADJACENT TO A WALKABLE SURFACE, DIRECTIONAL RAMP FLARES SHOULD BE USED. SEE THE DETAIL ON THIS SHEET.
(6) GRADING SHALL ALWAYS BE USED WHEN FEASIBLE. V CURB, IF USED, SHALL BE PLACED OUTSIDE THE SIDEWALK LIMITS WHEN RIGHT OF WAY ALLOWS. WHEN ADJACENT TO PARKING LOTS, CONCRETE OR BITUMENOUS TAPERS SHOULD BE USED OVER V CURB TO REDUCE TRIPPING HAZARDS AND FACILITATE SNOW & ICE REMOVAL.
(7) MAX. 2.0% SLOPE IN ALL DIRECTIONS IN FRONT OF GRADE BREAK AND DRAIN TO FLOW LINE. SHALL BE CONSTRUCTED INTEGRAL WITH CURB AND GUTTER.
(8) 8% TO 10% WALKABLE FLARE.
(9) PLACE DOMES AT THE BACK OF CURB WHEN ALLOWABLE SETBACK CRITERIA IS EXCEEDED.
(10) FRONT EDGE OF DETECTABLE WARNING SHALL BE SET BACK 2' MAXIMUM WHEN ADJACENT TO WALKABLE SURFACE, AND 5' MAXIMUM WHEN ADJACENT TO NON-WALKABLE SURFACE WITH ONE CORNER SET 3" FROM BACK OF CURB. A WALKABLE SURFACE IS DEFINED AS A PAVED SURFACE ADJACENT TO A CURB RAMP WITHOUT RAISED OBSTACLES THAT COULD MISTAKENLY BE TRAVERSED BY A USER WHO IS VISUALLY IMPAIRED.
(11) RECTANGULAR DETECTABLE WARNINGS MAY BE SETBACK UP TO 9" FROM THE BACK OF CURB WITH CORNERS SET 3" FROM BACK OF CURB. IF 9" SETBACK IS EXCEEDED USE RADIAL DETECTABLE WARNINGS.
(12) FOR DIRECTIONAL RAMPS WITH THE DETECTABLE WARNINGS PLACED AT THE BACK OF CURB, THE DETECTABLE WARNINGS SHALL COVER THE ENTIRE WIDTH OF THE WALK/PATH. THIS ENSURES A DETECTABLE EDGE AND HELPS ELIMINATE THE CURB TAPER OBSTRUCTING THE PATH OF PEDESTRIAN TRAVEL.
(13) THE CONCRETE WALK SHALL BE FORMED AND CONSTRUCTED PERPENDICULAR TO THE BACK OF CURB. MAINTAIN 3" BETWEEN EDGE OF DOMES AND EDGE OF CONCRETE.
(14) TO BE USED FOR ALL DIRECTIONAL RAMPS, EXCEPT WHERE DOMES ARE PLACED ALONG THE BACK OF CURB.

LEGEND

THESE LONGITUDINAL SLOPE RANGES SHALL BE THE STARTING POINT. IF SITE CONDITIONS WARRANT, LONGITUDINAL SLOPES UP TO 8.3% OR FLATTER ARE ALLOWED.

(S) INDICATES PEDESTRIAN RAMP - SLOPE SHALL BE BETWEEN 5.0% MINIMUM AND 8.3% MAXIMUM IN THE DIRECTION SHOWN AND THE CROSS SLOPE SHALL NOT EXCEED 2.0%.
(P) INDICATES PEDESTRIAN RAMP - SLOPE SHALL BE GREATER THAN 2.0% AND LESS THAN 5.0% IN THE DIRECTION SHOWN AND CROSS SLOPE SHALL NOT EXCEED 2.0%.
LANDING AREA - 4' X 4' MIN. (5' X 5' MIN. PREFERRED) DIMENSIONS AND MAX 2.0% SLOPE IN ALL DIRECTIONS. LANDING SHALL BE FULL WIDTH OF INCOMING PARS.
X" CURB HEIGHT

REVISION:
APPROVED: JANUARY 23, 2017
OPERATIONS ENGINEER

MINNESOTA DEPARTMENT OF TRANSPORTATION
STATE DESIGN ENGINEER
REVISED:
APPROVED: 1-23-2017

PEDESTRIAN CURB RAMP DETAILS

STANDARD PLAN 5-297.250 | 2 OF 6

5 C502 MNDOT PEDESTRIAN CURB RAMP
NOT TO SCALE

PLOTTED: REVISED:
DISTRICT 1, DISTRICT *
USER NAME: $$$USERNAME$$$
PATH & FILENAME: Documents=Operations=A20L Review=A20L Design=Utilities=A20A Design=Standards=Approved=Standard=Approved=Ped=Ped
FILE NAME: $$$FILENAME$$$

MACDONALD & MACK ARCHITECTS
3101 East Franklin Avenue Minneapolis, MN 55406
P 612.341.4051 - F 612.237.5843 - www.mmarchitect.com

Plans, specs, and other documents, designs, arrangements and other work products indicated on this sheet are instruments of service for use solely with respect to this project. All reproductions must bear the notice of the law of copyright.

BKBM ENGINEERS
6120 Earle Brown Dr., Suite 700
Minneapolis, MN 55340
Phone: (763) 843-0420
Fax: (763) 843-0421
www.bkbm.com

CHASKA YARDS AT THE HISTORIC ESS SITE
Carver County Community Development Authority
217 Walnut Street North, Chaska, Minnesota 55318

DRAWN BY: NH | CHECKED BY: CKD | DATE: 03/13/2023 | REVISION:

CIVIL DETAILS

C502

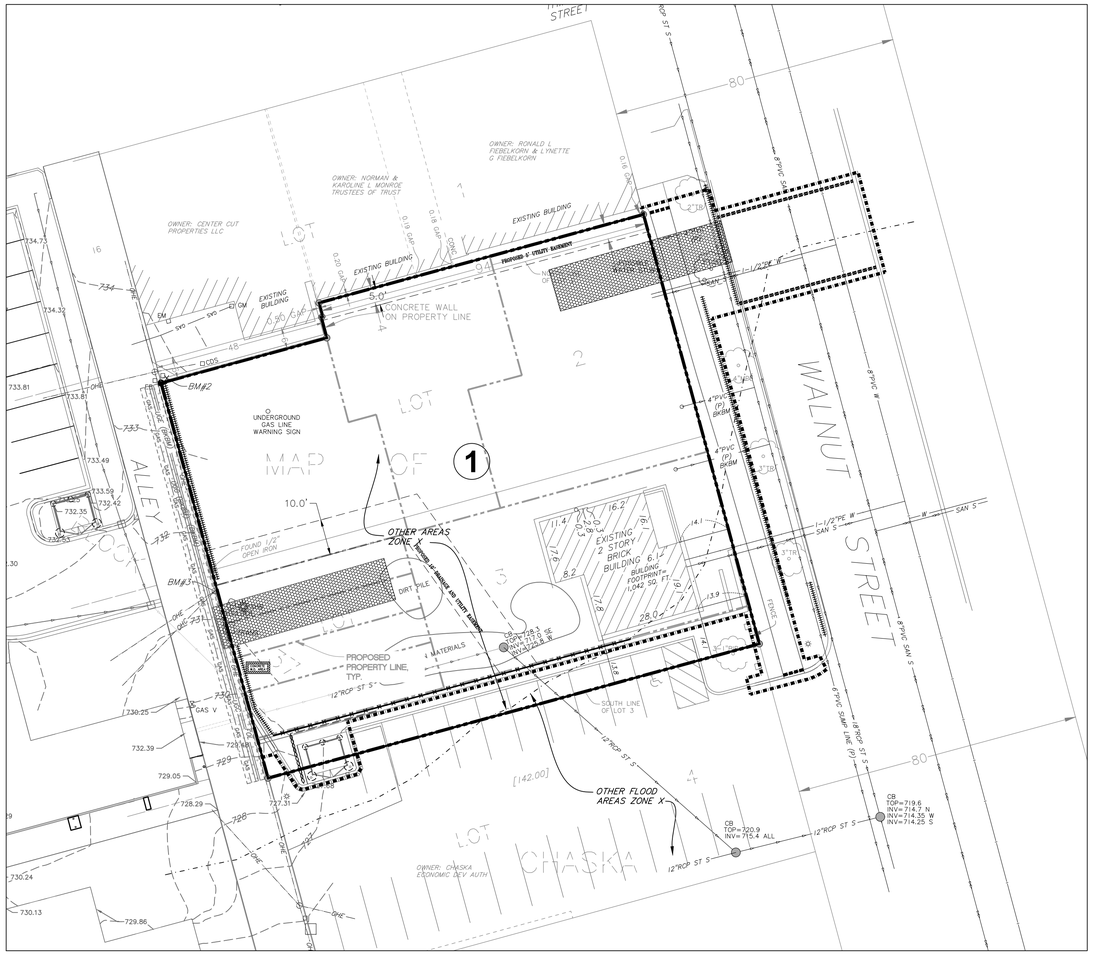

1 C600 EXISTING CONDITIONS
1"=20'

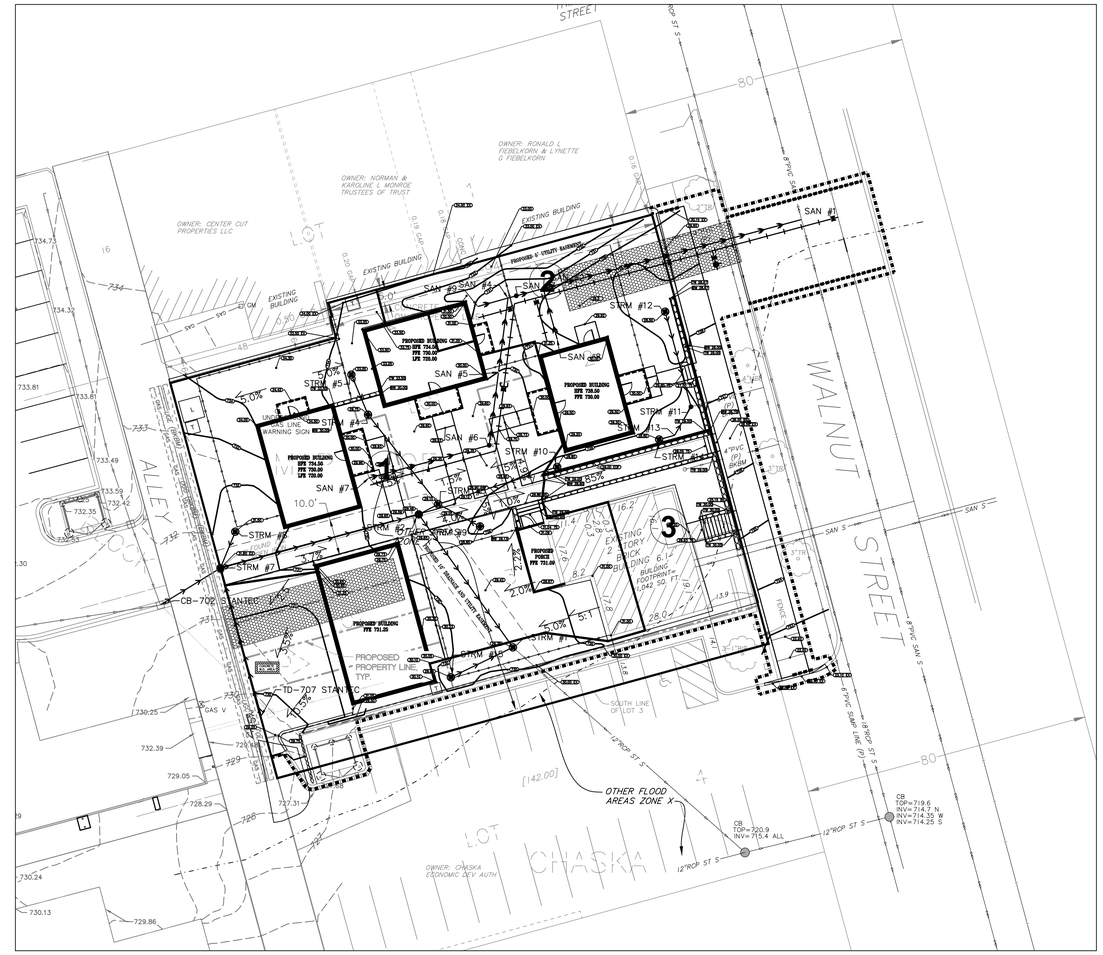

2 C600 PROPOSED CONDITIONS
1"=20'

EXISTING DRAINAGE AREAS							
DRAINAGE AREA	IMPERVIOUS AREA (ACRES)	PERVIOUS AREA (ACRES)	TOTAL AREA (ACRES)	Q OUT (CFS) STORM EVENT			ROUTING
				2-YEAR (2.86")	10-YEAR (4.24")	100-YEAR (7.32")	
1	0.03	0.36	0.40	0.31	0.85	2.41	OVERLAND FLOW TO CITY RIGHT OF WAY
TOTAL	0.03	0.36	0.40	0.31	0.85	2.41	

STORMWATER RUNOFF SUMMARY			
	2-YR STORM (2.86") RUNOFF (CFS)	10-YR STORM (4.24") RUNOFF (CFS)	100-YR STORM (7.32") RUNOFF (CFS)
EXISTING SITE	0.31	0.85	2.41
PROPOSED SITE	0.93	1.60	3.27

PROPOSED DRAINAGE AREAS							
DRAINAGE AREA	IMPERVIOUS AREA (ACRES)	PERVIOUS AREA (ACRES)	TOTAL AREA (ACRES)	Q OUT (CFS) STORM EVENT			ROUTING
				2-YEAR (2.86")	10-YEAR (4.24")	100-YEAR (7.32")	
1	0.10	0.11	0.20	0.44	0.78	1.63	12" RCP STORM SEWER WITHIN SOUTHERN PARKING LOT
2	0.02	0.06	0.08	0.11	0.22	0.53	EXISTING 4" PVC STORM LATERAL
3	0.09	0.03	0.12	0.38	0.60	1.11	OVERLAND FLOW TO CITY ROW
TOTAL	0.21	0.19	0.40	0.93	1.60	3.27	

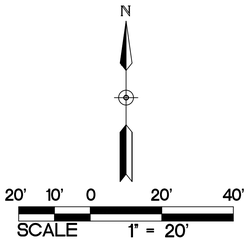

PROJECT NARRATIVE

THE EXISTING SITE IS LOCATED WITHIN THE DOWNTOWN CHASKA AREA, AND WAS FORMERLY DEVELOPED AS SINGLE FAMILY HOUSING. THE SITE IS 0.40 ACRES, CONSISTING OF ONE SINGLE FAMILY RESIDENCE AND COMPRISED OF 0.36 ACRES OF PERVIOUS GREEN SPACE. THE LOT HAS BEEN PREPARED FOR FUTURE DEVELOPMENT, CLEAR AND WITH EXISTING STORMWATER INFRASTRUCTURE. THE SITE HAS TWO POSSIBLE STORM SEWER CONNECTIONS, AN EXISTING 12 INCH RCP AND TWO EXISTING 4 INCH PVC LATERALS THAT CONNECT TO A 6 INCH PVC HEADER. DEVELOPMENT STATUS, EXISTING INFRASTRUCTURE, AND OTHER INFORMATION

UNDER THE PROPOSED PROJECT, THE SITE WOULD BE REDEVELOPED TO INCLUDE THREE NEW SINGLE FAMILY HOMES, RETAINING WALLS, SHARED AND PRIVATE YARD SPACE, WALKWAYS, PATIOS, AND A SHARED GARAGE. THE IMPROVEMENTS SHALL INCREASE THE AMOUNT OF IMPERVIOUS FROM 0.04 ACRES TO 0.21 ACRES. STORMWATER RUNOFF SHALL BE COLLECTED BY NYOPLAST CATCH BASINS THAT WILL CONVEY RUNOFF TO THE CITY STORMWATER SYSTEM VIA THE EXISTING 12 INCH RPC OR THE 4 INCH PVC LATERALS. SEE THE PROPOSED DRAINAGE AREAS TABLE ANT FIGURE 2/C6.0 FOR A SUMMARY OF THE STORMWATER RUNOFF UNDER THE PROPOSED PROJECT.

VICINITY MAP
CHASKA, MINNESOTA

MACDONALD & MACK ARCHITECTS
3101 East Franklin Avenue Minneapolis, MN 55406
P 612.341.4051 - F 612.237.3843 - www.mmarchitect.com

Plans and/or the data, specifications, or other documents or electronic data prepared by us are intended for a single purpose and for a specific project. Any other use or reuse requires our written consent.

BKBM ENGINEERS
6120 Earle Brown Dr.,
Suite 700
Minneapolis, MN 55340
Phone: (763) 843-0420
Fax: (763) 843-0421
www.bkbm.com

CHASKA YARDS AT THE HISTORIC ESS SITE
Carver County Community Development Authority
217 Walnut Street North, Chaska, Minnesota 55318

DRAWN BY: WH CHECKED BY: GKD DATE: 03/13/2023 REVISION:

STORM WATER PLAN

C600

Luminaire Schedule							
Symbol	Qty	Label	Arrangement	LLF	Description	Arr. Watts	Lum. Lumens
	7	LT-01A	Single	0.900	RAGNI 900 KASSIO-8L-350mA-3000K-T3 BOLLARD	10.5	957
	3	LT-01B	Back-Back	0.900	RAGNI 900 KASSIO-8L-350mA-3000K-T3 TWIN BOLLARD	21	957
	9	LT-02	Single	0.900	LIGMAN LEW-30011-T3-W30 WALL MOUNT AT 8FT	13.8	1376

Calculation Summary							
Label	CalcType	Units	Avg	Max	Min	Avg/Min	Max/Min
SITE GROUND	Illuminance	Fc	0.88	23.7	0.0	N.A.	N.A.

TYPE LT-01A

TYPE LT-01B

TYPE LT-02

Plan View
Scale: 1 inch= 20 Ft.

GENERAL NOTES:

A. PULSE PRODUCTS DOES NOT ASSUME RESPONSIBILITY FOR THE INTERPRETATION OF THIS CALCULATION OR COMPLAINCE TO THE LOCAL, STATE, OR FEDERAL LIGHTNG CODES OR ORDINANCES.

B. LIGHTING LAYOUT IS NOT INTENDED FOR CONSTRUCTION DOCUMENTS BUT ONLY TO ILLUSTRATE THE PERFORMANCE OF THE PRODUCT.

C. ALL READINGS/CALCULATIONS SHOWN ARE SHOWN ON OBJECTS/SURFACES.

PULSE never ordinary

#	Date	Comments

Revisions

Drawn By: SANDY
Checked By: ROB C, ARLIN
Date:12/20/2022
Scale: AS NOTED

CHASKA YARDS

PAGE 1 OF 1

CHASKA YARDS
context plan

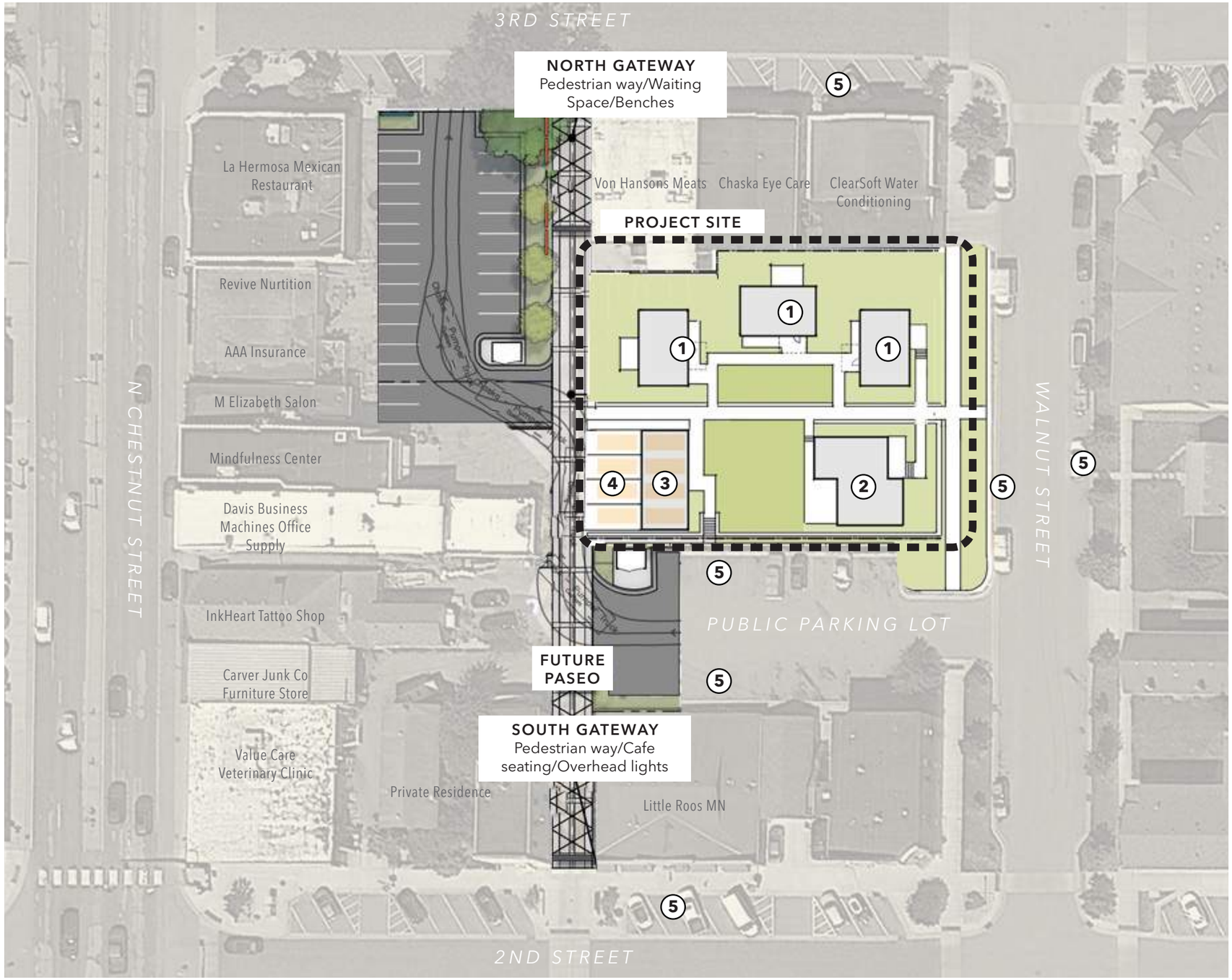

1. PROPOSED HOUSING UNITS
2. HISTORIC ERNST HOUSE (RENOVATED)
3. GARAGE
4. ON SITE PARKING
5. EXISTING PUBLIC PARKING

   -Public parking removed off Chesnut St with hwy 41 reconstruction

0 25 50 75 FT

CHASKA YARDS
existing conditions plan

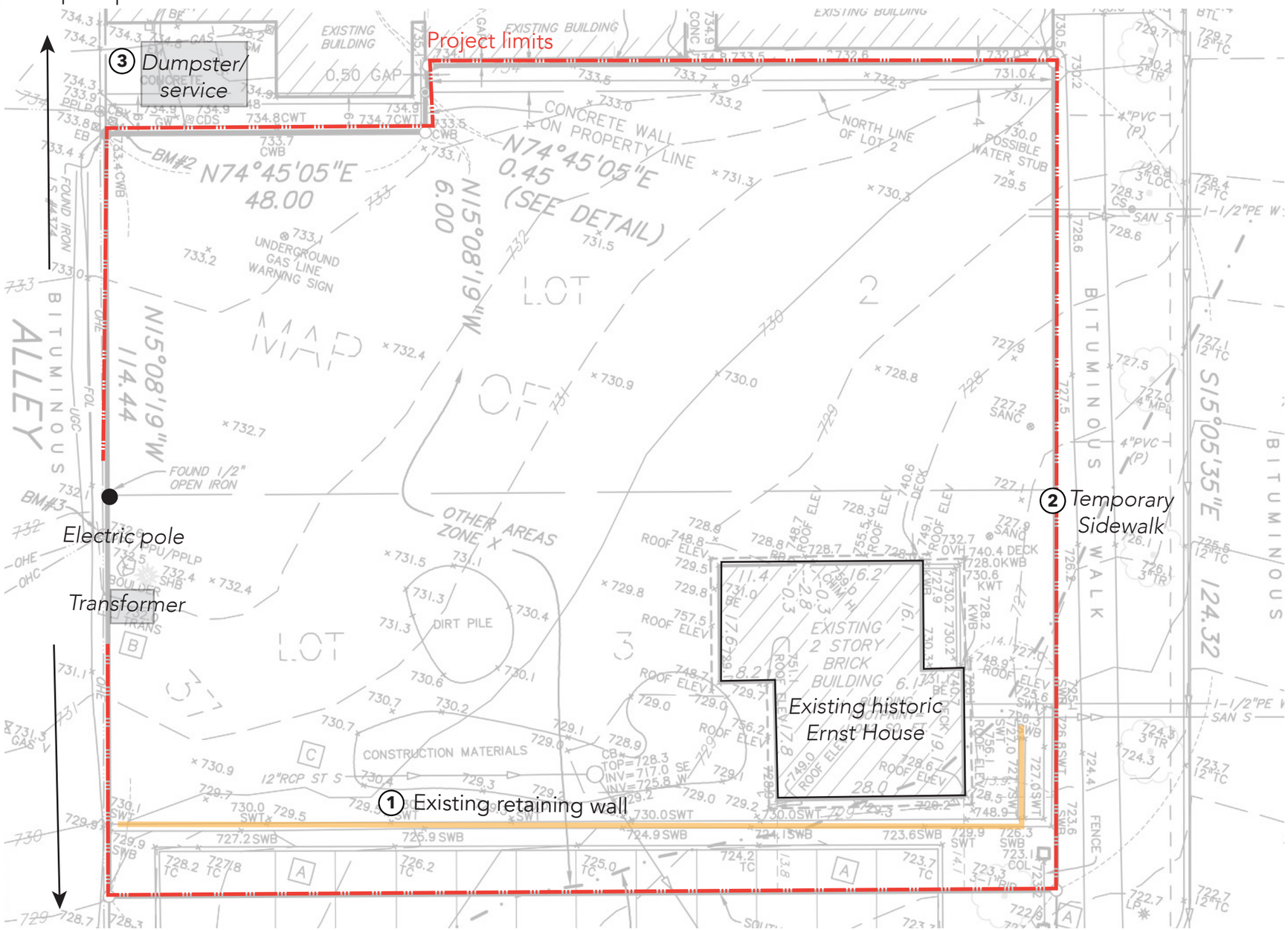

0 10 20 30 FT

CHASKA YARDS
site forces plan

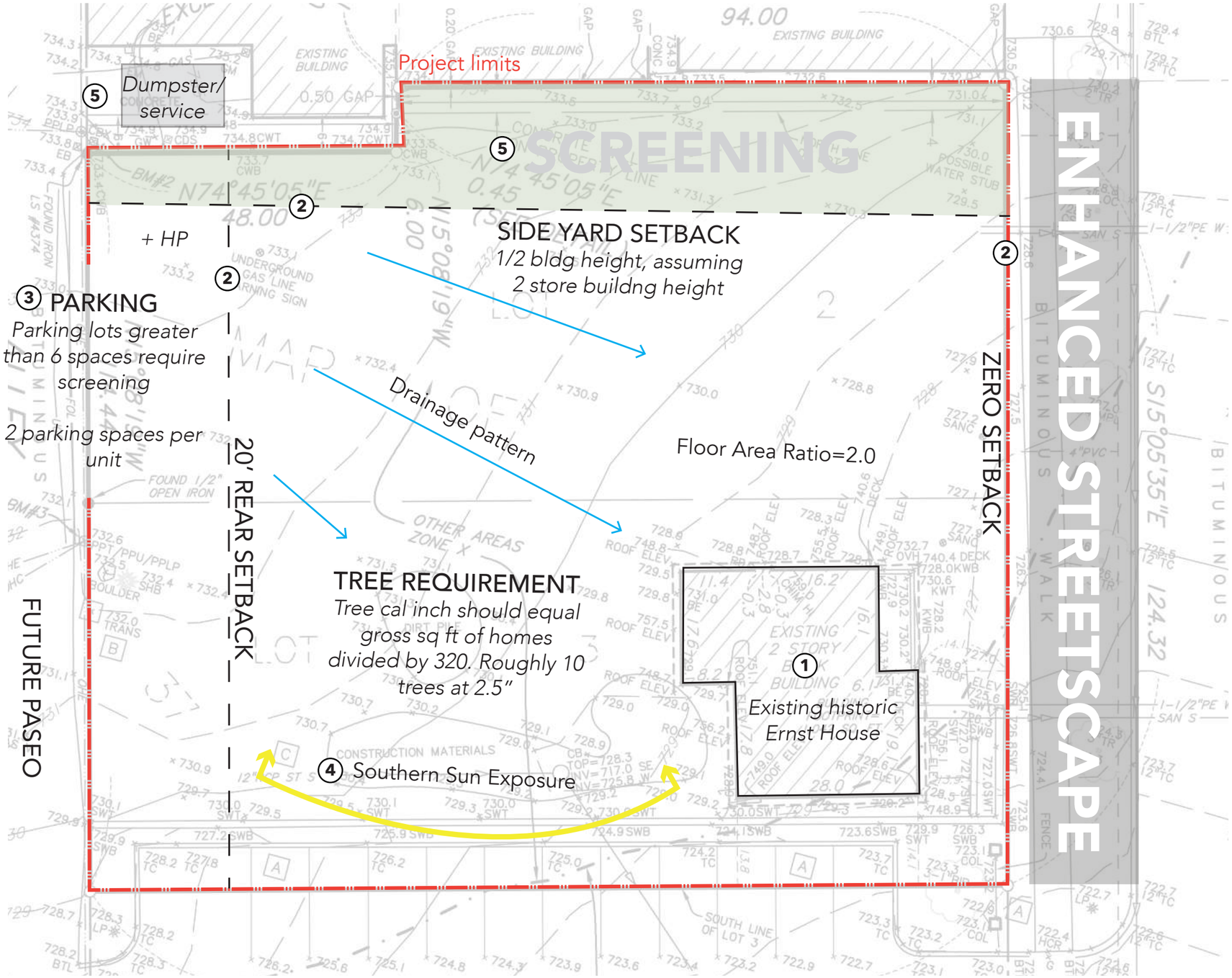

1. HISTORIC ERNST HOUSE
2. SETBACK REQUIREMENTS
3. PARKING REQUIREMENTS (8 STALLS)
4. SOUTHERN EXPOSURE UTILIZED FOR COMMONS
5. SCREEN ADJACENT STRUCTURES

0 10 20 30 FT

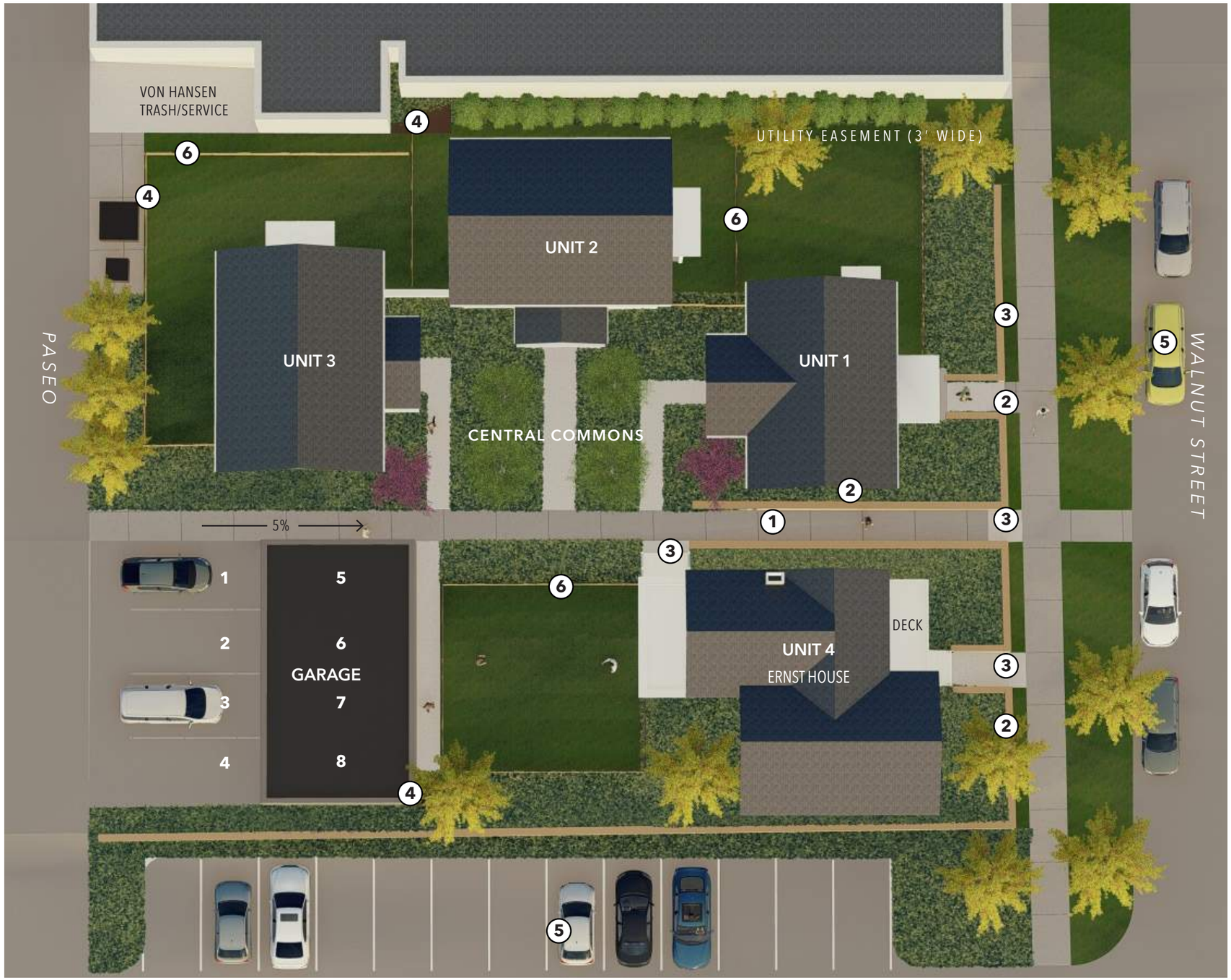

CHASKA YARDS
site plan

1. CENTRAL WALKWAY
2. LIMESTONE RETAINING WALL
3. STAIRS
4. TRANSFORMERS
5. EXISTING PUBLIC PARKING
6. FENCING

0 10 20 30 FT

CHASKA YARDS
southwest birdseye view

CHASKA YARDS
southeast birdseye view

CHASKA YARDS
northeast birdseye view

CHASKA YARDS
northwest birdseye view

CHASKA YARDS
walnut street birdseye view

CHASKA YARDS
walnut street view

CHASKA YARDS
walnut street frontage

CHASKA YARDS
walnut street frontage

CHASKA YARDS
commons birdseye view

CHASKA YARDS
commons eye level view

CHASKA YARDS
commons eye level view

CHASKA YARDS
paseo view - looking north

CHASKA YARDS
paseo view - looking south

CHASKA YARDS
fencing specifications: custom cedar

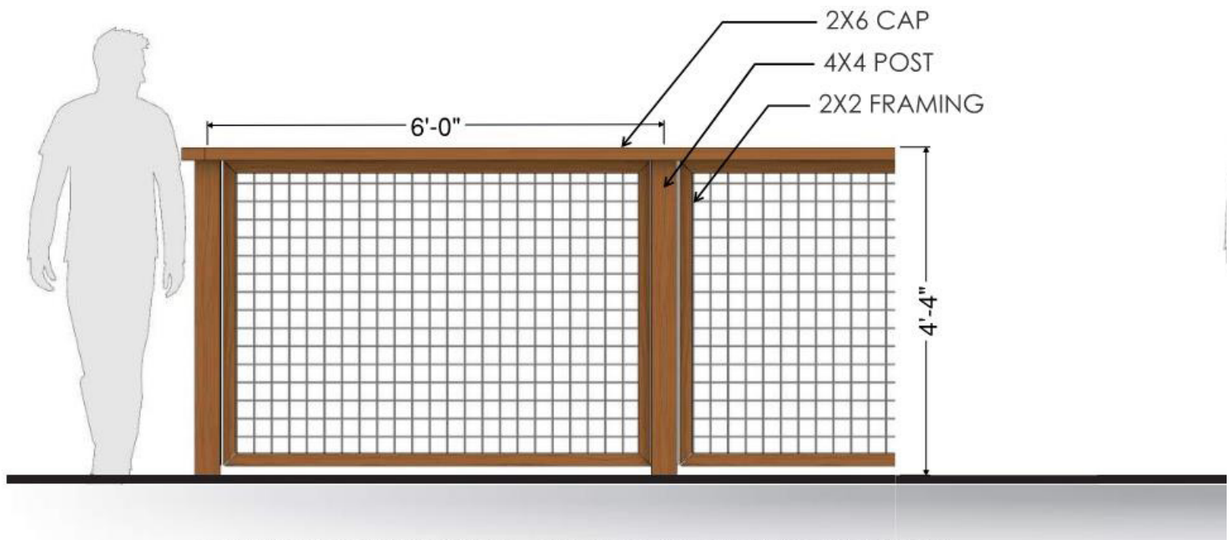

ELEVATION @ FENCE TYPE 1 - CEDAR & GALVANIZED WIRE MESH
1/2"=1'

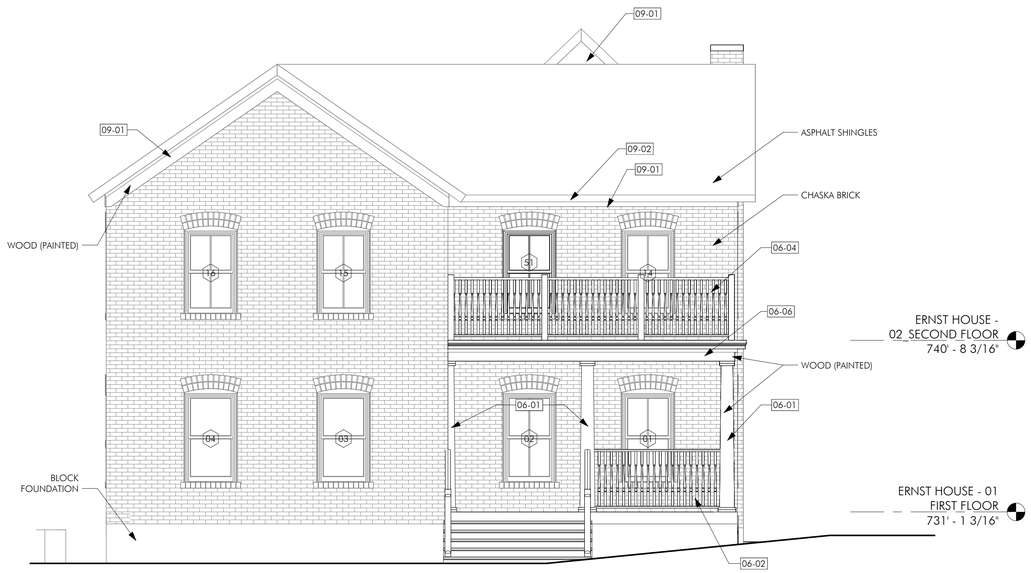

1 | ERNST HOUSE - EAST ELEVATION
A201 | 1/4" = 1'-0"

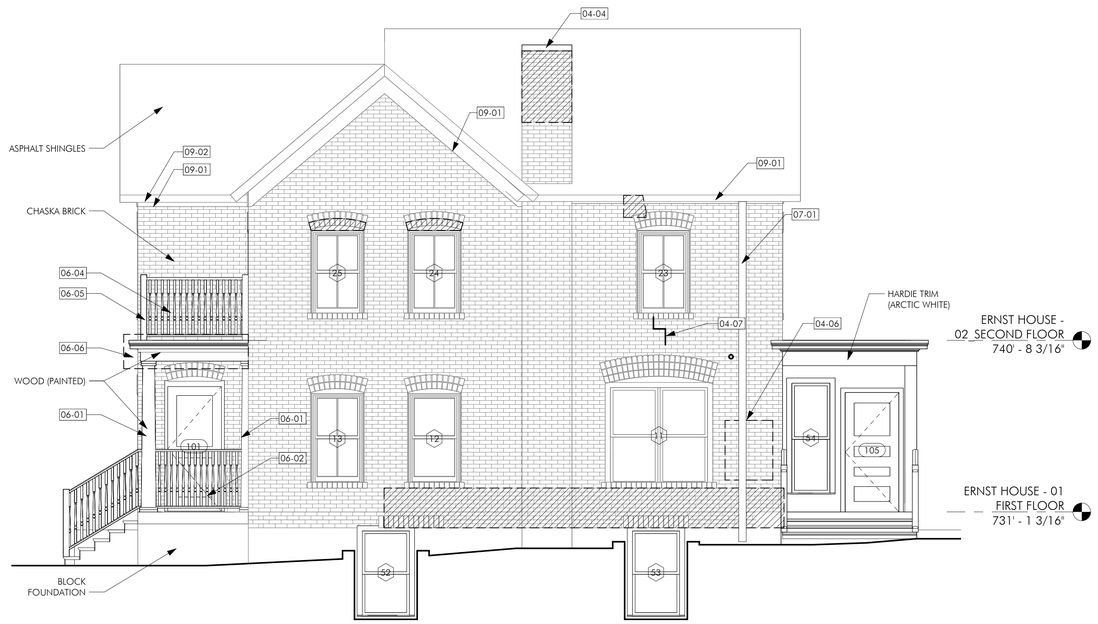

2 | ERNST HOUSE - NORTH ELEVATION
A201 | 1/4" = 1'-0"

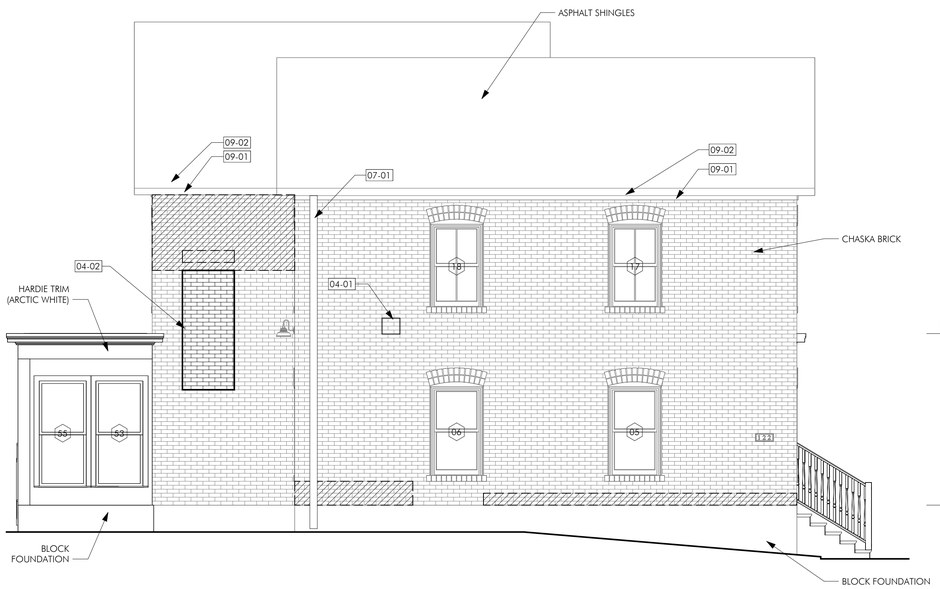

3 | ERNST HOUSE - SOUTH ELEVATION
A201 | 1/4" = 1'-0"

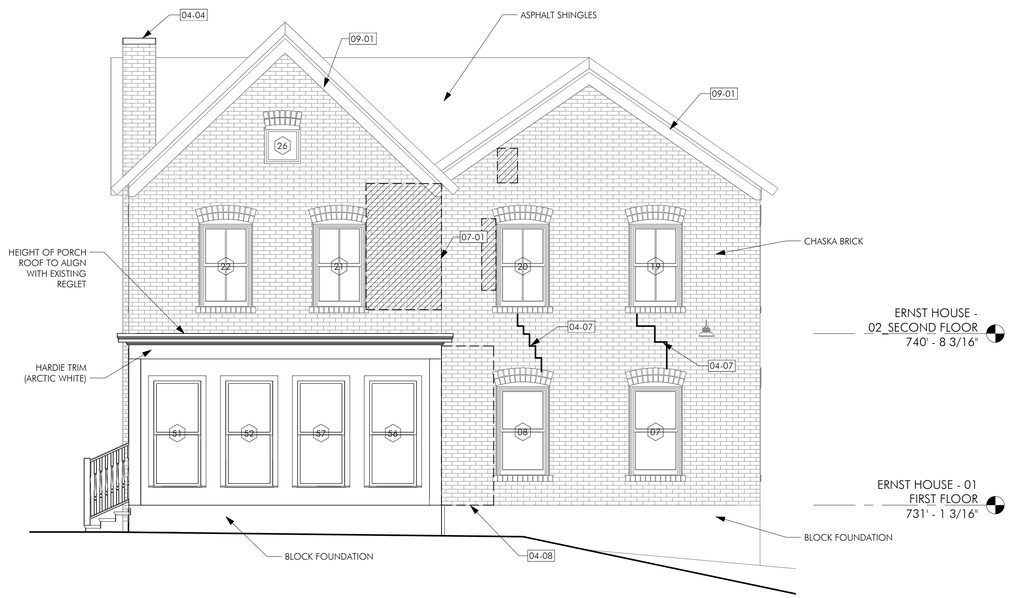

4 | ERNST HOUSE - WEST ELEVATION
A201 | 1/4" = 1'-0"

SHEET NOTES

1. PLEASE REFER TO G000 FOR GENERAL NOTES AND SPECIAL REQUIREMENTS.
2. ALL MEASUREMENTS TAKEN FROM FINISH FACE OF WALLS.

WORK ON ENTIRE HOUSE
1. CLEAN MASONRY WITH GENTLEST MEANS POSSIBLE. REMOVE LOOSE PAINT.

KEYNOTES

04-01	REMOVE EXISTING MORTAR FILLED HOLE. INSTALL BRICK TO MATCH EXISTING.
04-02	RECONSTRUCT WALL AT DOOR REMOVAL.
04-04	INSTALL CONCRETE CHIMNEY CAP.
04-06	FILL HOLES RESULTING FROM REMOVED METER BOXES.
04-07	REPAIR CRACK IN MASONRY.
04-08	REMOVE PAINT WITH GENTLEST MEANS POSSIBLE.
06-01	INSTALL SALVAGED PORCH COLUMNS SURROUNDS AND PILASTERS. REPAIR AS NEEDED TO MATCH EXISTING, USE CONSOLIDANT. SCRAPE AND REPAINT.
06-02	INSTALL PORCH RAILING. PAINT.
06-04	INSTALL BALCONY BALUSTRADE TO MATCH EXISTING. PAINT.
06-05	INSTALL BALCONY POST. PAINT.
06-06	REMOVE DETERIORATED MEMBERS OF PORCH CEILING. REPLACE STRUCTURE AS NEEDED. INSTALL NEW WOOD FASCIA, CROWN MOLDING, AND DENTILS. PAINT.
07-01	PROVIDE DOWNSPOUT.
09-01	SCRAPE AND REPAINT WOOD TRIM AT CORNICE AND SOFFIT OF HOUSE OR PORCH.
09-02	SCRAPE AND REPAINT EXISTING GUTTERS.

LEGEND

MASONRY CRACK
REPOINT BRICK

MacDonald & Mack ARCHITECTS

Having verified field this plan, specification, or report was prepared by me or under my direct supervision and that I am a duly Registered Architect under the Laws of the State of Minnesota.

Date 22-01-18 License 25893

CHASKA YARDS AT THE HISTORIC ESS SITE
Carver County Community Development Authority
217 Walnut Street North, Chaska, Minnesota 55318

DATE	REVISION
22-01-18	

DRAWN BY

ERNST HOUSE - BUILDING ELEVATIONS

A201

CHASKA YARDS
Ernst House

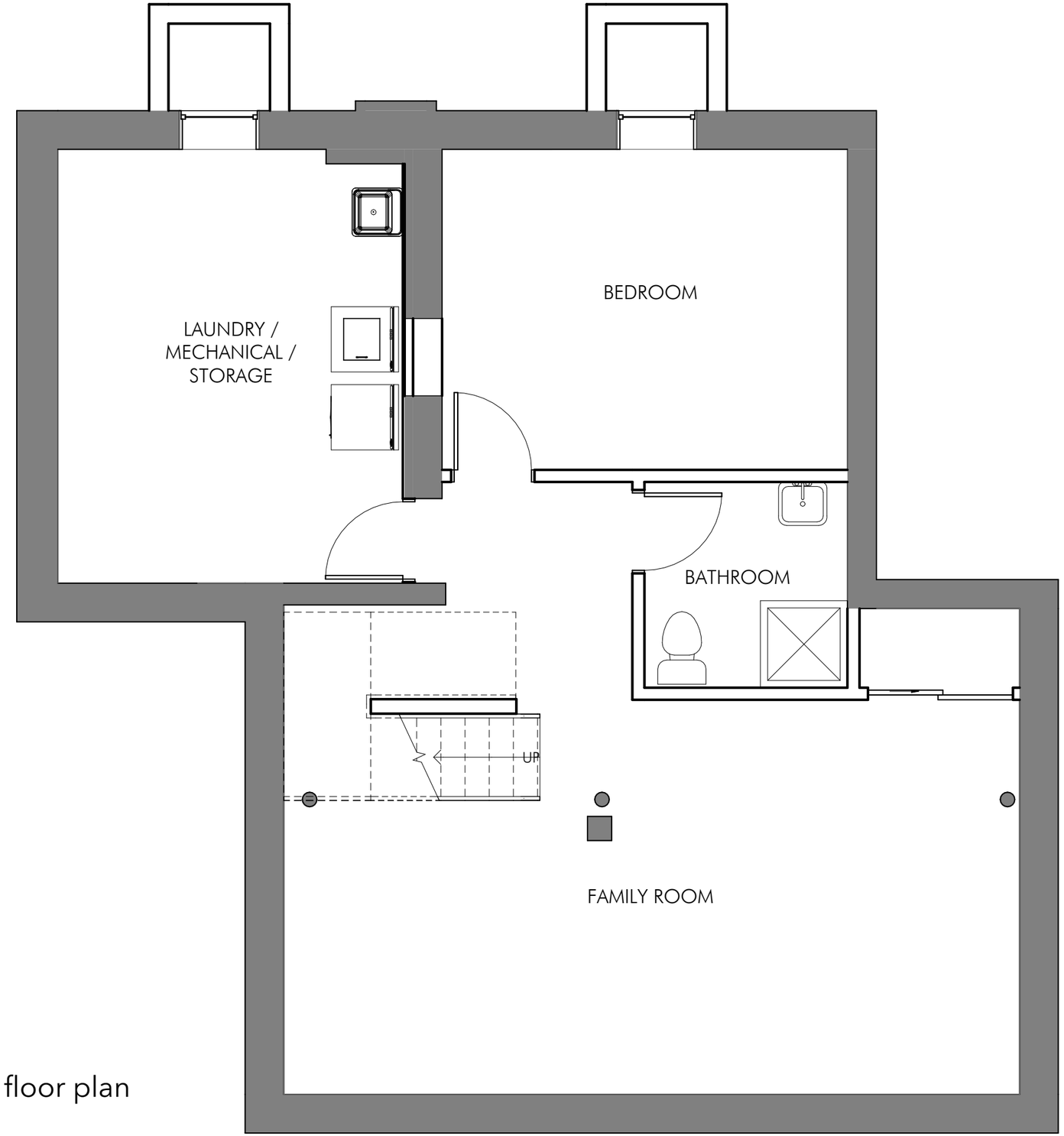

basement floor plan

CHASKA YARDS
Ernst House

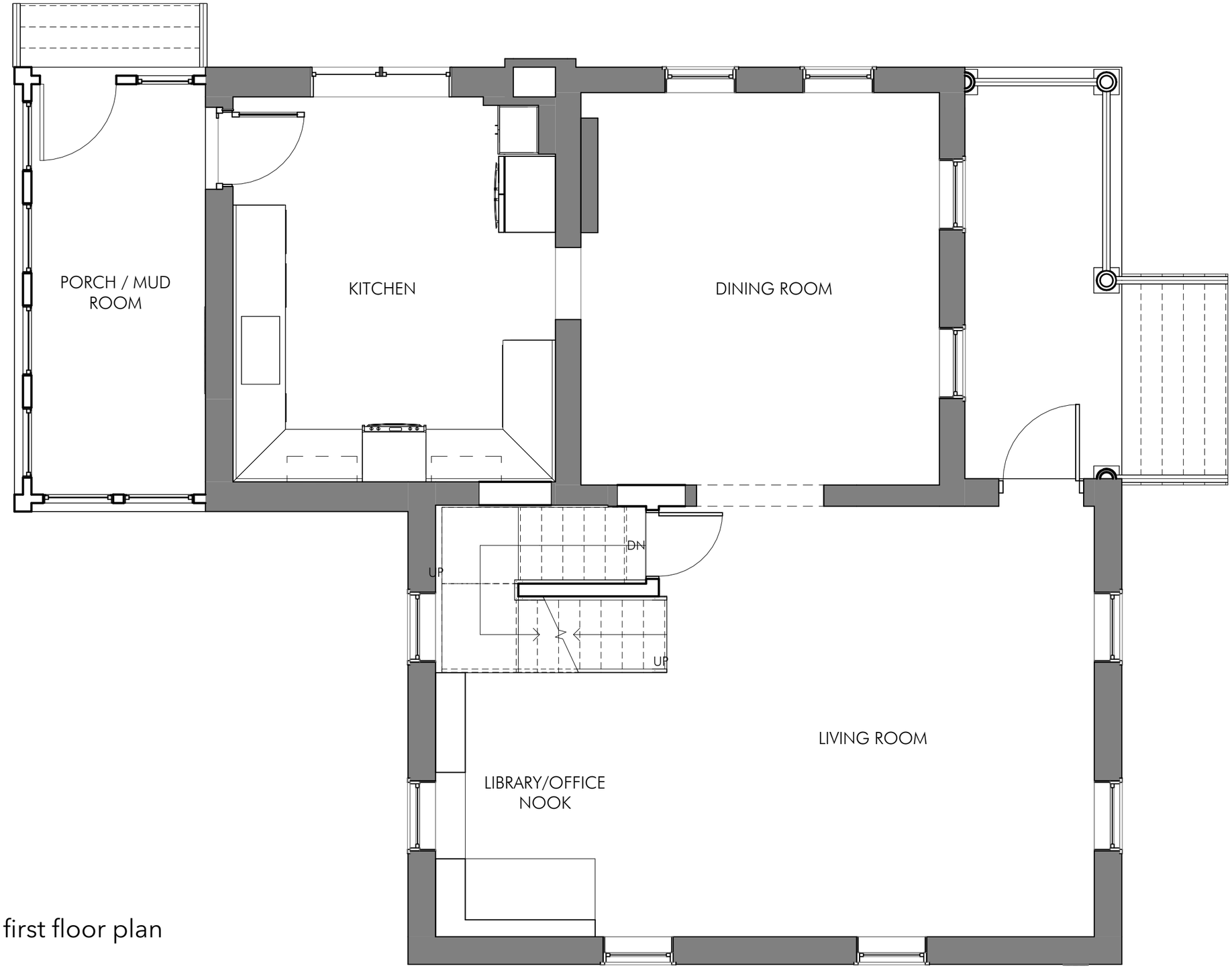

first floor plan

CHASKA YARDS
Ernst House

second floor plan

SHEET NOTES

TYPICAL ALL UNITS:
- WINDOWS: MARVIN INTEGRITY WINDOWS
- DOORS: TBD
- GARAGE DOORS: AMARR - Carriage Court - CC4000 - Pinetop - Closed Square - White

1 A251 CHASKA YARDS - Unit 1 - EAST ELEVATION
1/4" = 1'-0"

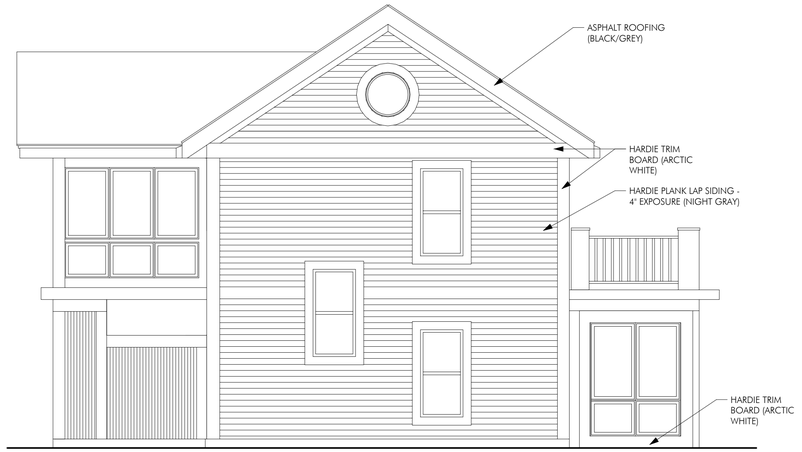

4 A251 CHASKA YARDS - Unit 1 - SOUTH ELEVATION
1/4" = 1'-0"

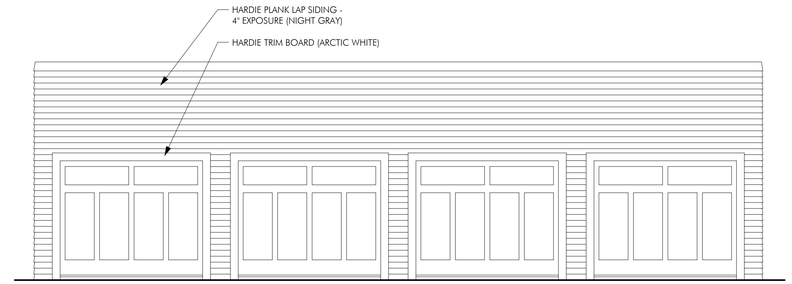

9 A251 CHASKA YARDS - Garage - WEST ELEVATION
1/4" = 1'-0"

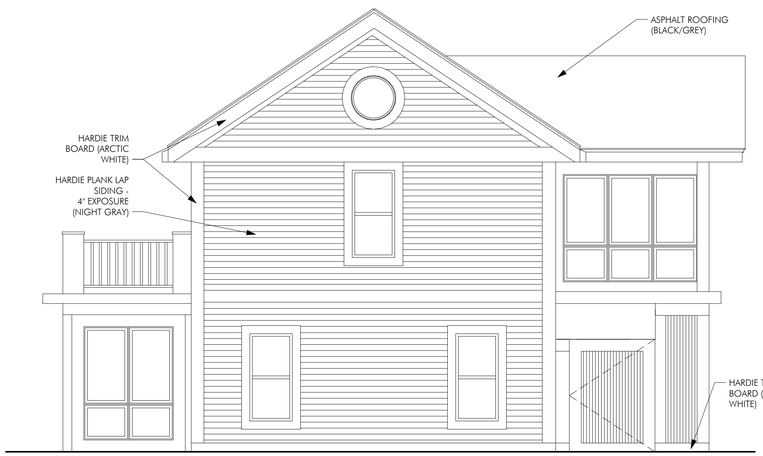

3 A251 CHASKA YARDS - Unit 1 - NORTH ELEVATION
1/4" = 1'-0"

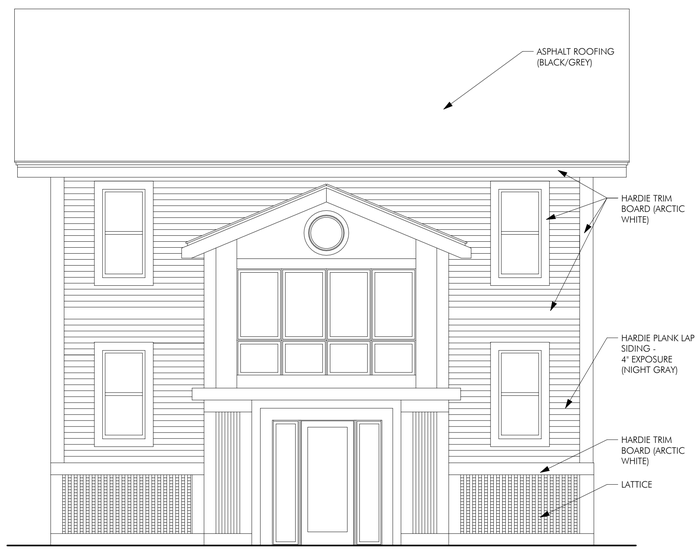

5 A251 CHASKA YARDS - Unit 2&3 - A ELEVATION
1/4" = 1'-0"

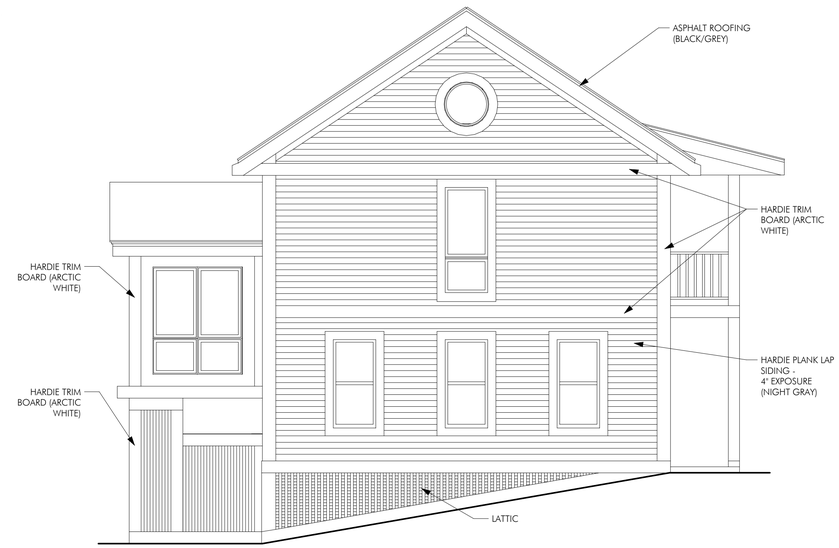

6 A251 CHASKA YARDS - Unit 2&3 - B ELEVATION
1/4" = 1'-0"

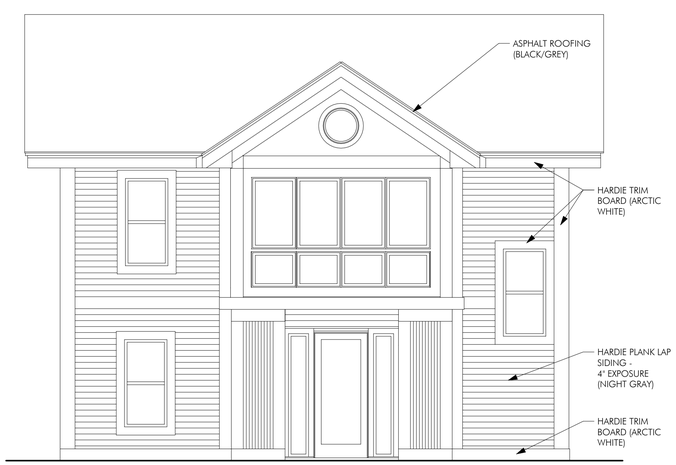

2 A251 CHASKA YARDS - Unit 1 - WEST ELEVATION
1/4" = 1'-0"

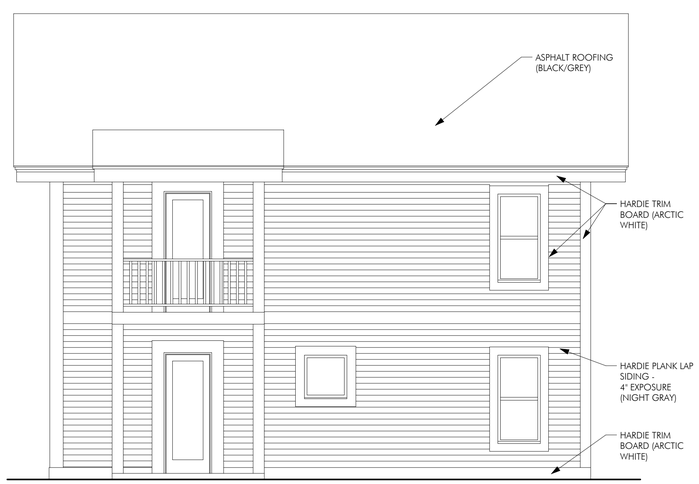

7 A251 CHASKA YARDS - Unit 2&3 - C ELEVATION
1/4" = 1'-0"

8 A251 CHASKA YARDS - Unit 2&3 - D ELEVATION
1/4" = 1'-0"

MacDonald & Mack ARCHITECTS

Hardie siding that the plans, specifications, or report have prepared by me or under my direct supervision and that I am a duly Licensed Architect under the laws of the State of Minnesota.

Date Reg #

CHASKA YARDS AT THE HISTORIC ESS SITE
Carver County Community Development Authority
217 Walnut Street North, Chaska, Minnesota 55318

DRAWN BY dr DATE 23.01.18 REVISION

CHASKA YARDS - UNIT - ELEVATIONS

A251

CHASKA YARDS
Unit 1

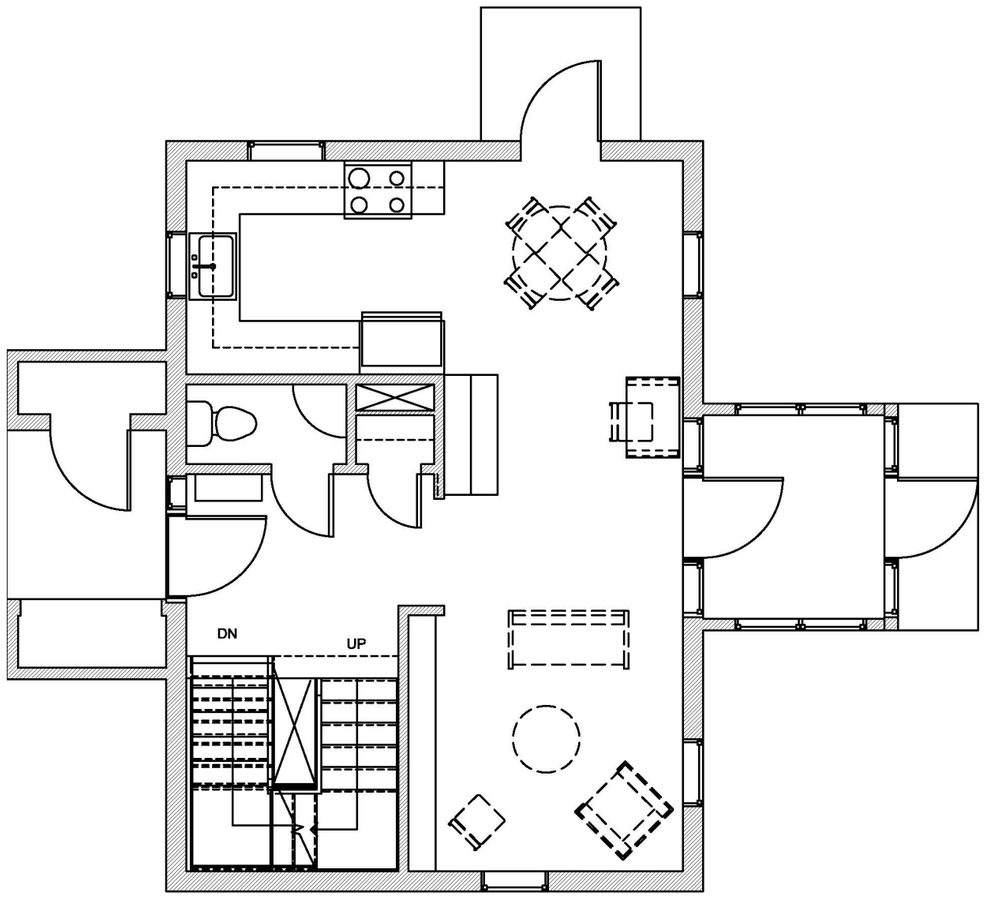

main level floor plan

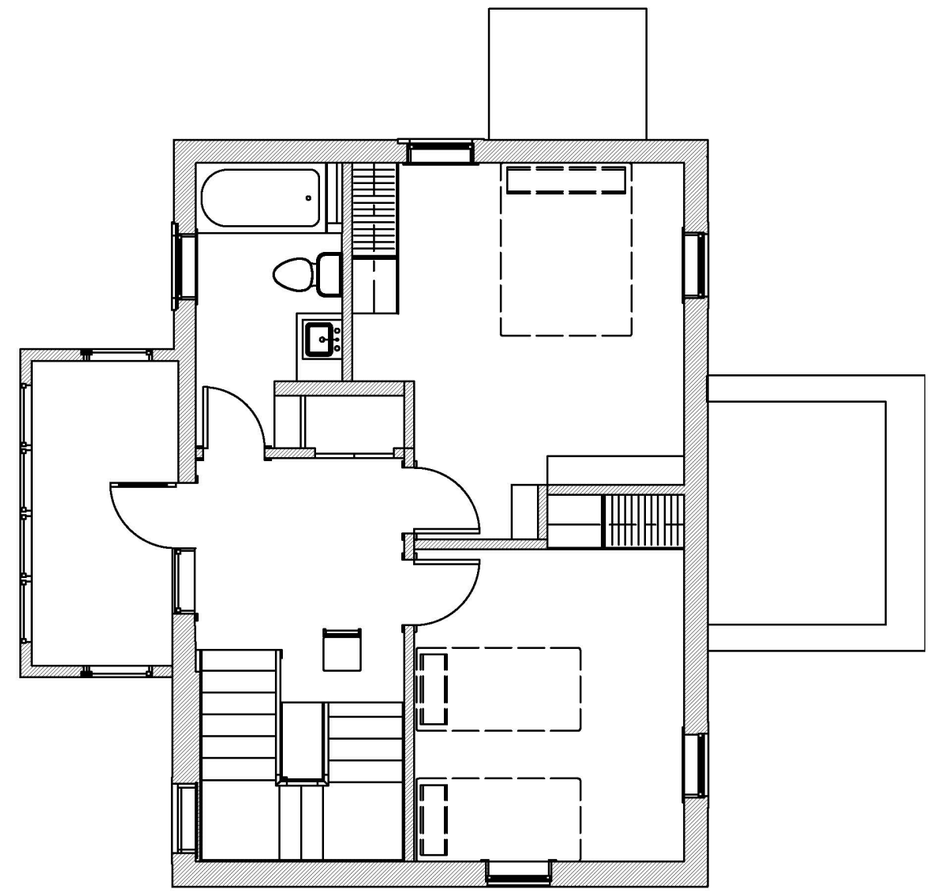

upper level floor plan

CHASKA YARDS
Unit 2&3

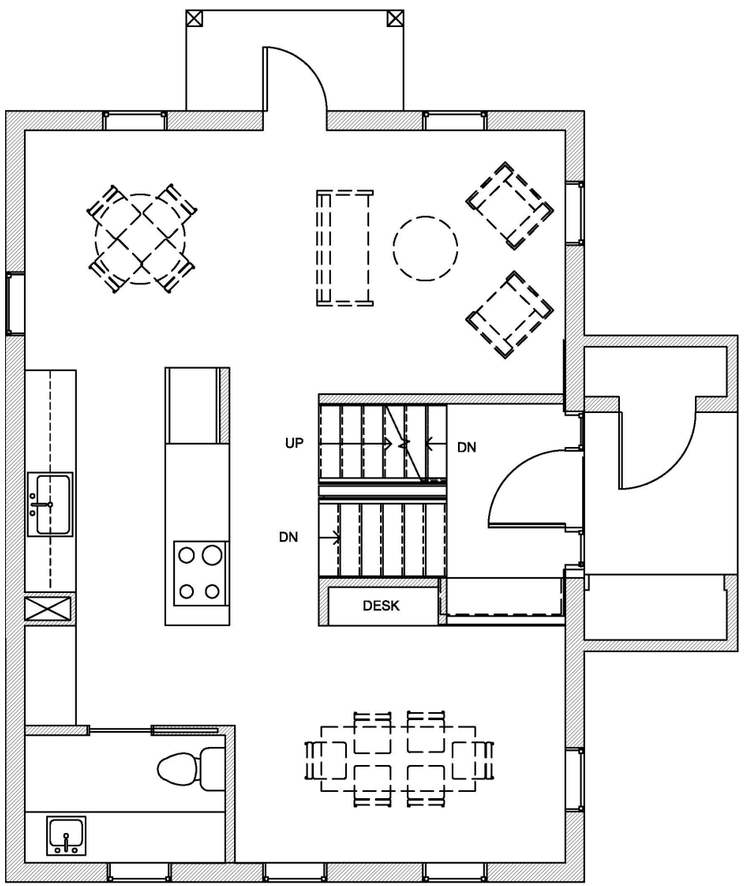

main level floor plan

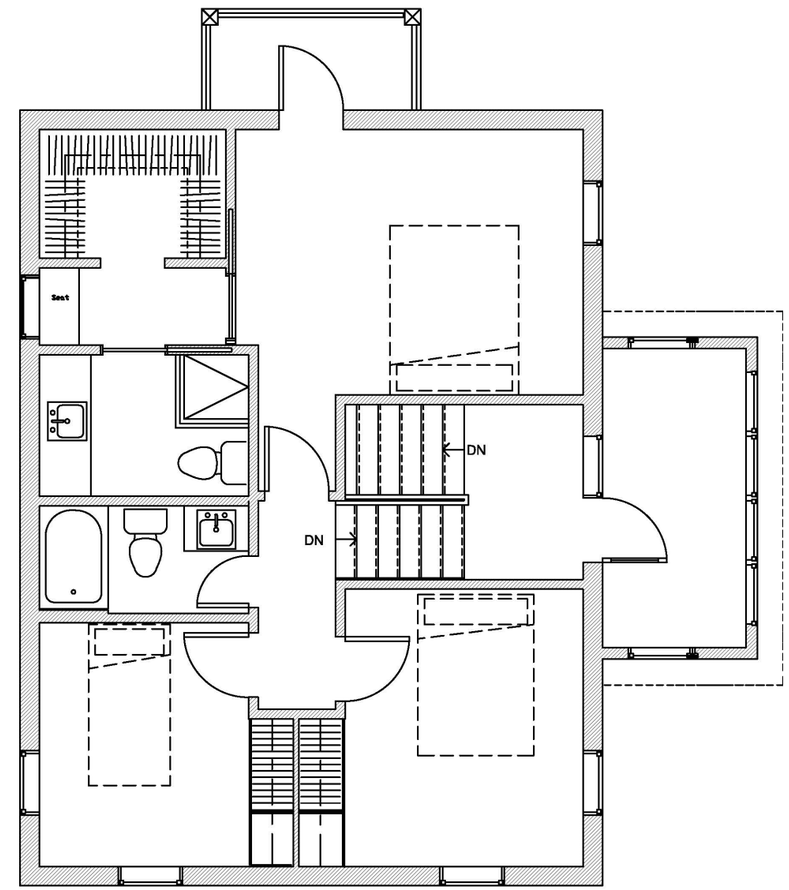

upper level floor plan

CHASKA YARDS
Garage

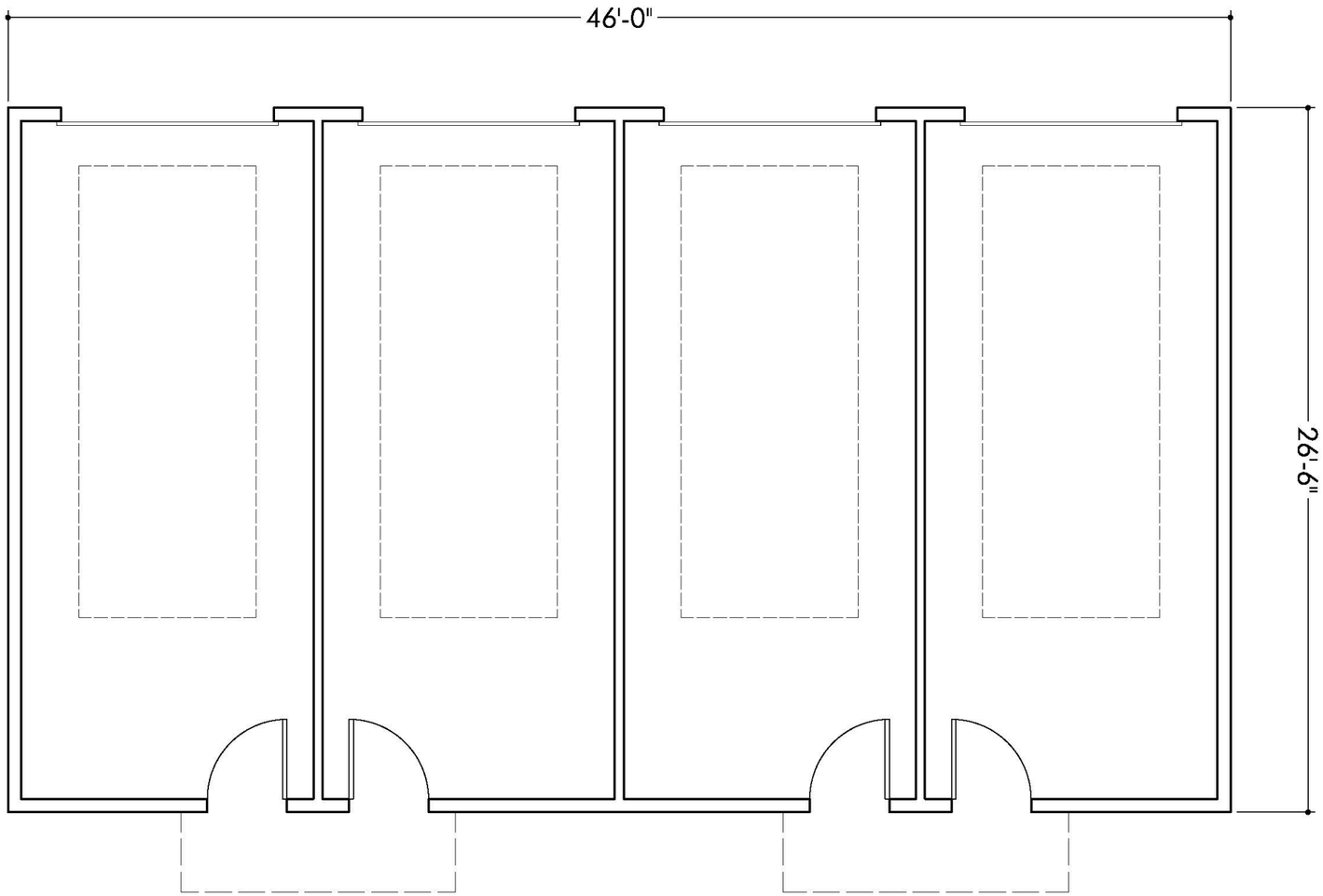

foor plan

MATERIALS SCHEDULE

SYMBOL	FENCE & GUARDRAIL DESCRIPTION	QTY
FE-01	FENCE TYPE 01 - 4' HGT WOOD SLAT FENCE	322 LF

SYMBOL	GATE DESCRIPTION	QTY
GA-01	GATE TYPE 01 - TIMBER GATE	2

SYMBOL	PAVING DESCRIPTION	QTY
P-01	PAVING TYPE 01 - CONCRETE	2,591 SF
P-03	PAVING TYPE 03 - DECKING	93 SF

SYMBOL	STAIRS DESCRIPTION	QTY
ST-01	STAIR TYPE 01 - CIP STAIRS	

SYMBOL	WALL DESCRIPTION	QTY
WL-01	WALL TYPE 01 - LIMESTONE WALL TO MATCH EXISTING	206 LF
WL-02	WALL TYPE 02 - EXISTING LIMESTONE WALL	141 LF

1 PARKING STALL

T TRANSFORMER

SITE INFORMATION

SITE AREA: 17,230 SQ FT

1 SITE PLAN

SCALE 1:10

0 10 20 40

SCALE: 1" = 10'-0"

NORTH

MACDONALD & MACK ARCHITECTS
3101 East Franklin Avenue Minneapolis, MN 55406
P 612.341.4051 - F 612.237.5843 - www.mmarchitd.com

DAMON FARBER LANDSCAPE ARCHITECTS
310 S 4th Ave Suite 7050
Minneapolis, MN 55415
P 612.332.7592

CHASKA YARDS AT THE HISTORIC ESS SITE
Carver County Community Development Authority
217 Walnut Street North, Chaska, Minnesota 55318

DRAWN BY	AM	DATE	12/06/2022	REVISION	03/10/2023

SITE PLAN

L110

REQUEST FOR ACTION
CHASKA PLANNING COMMISSION
04/12/2023

Subject: **3740 Chestnut Street (former Treehouse site) – Concept Plan**

Applicant: Audrius Asakenas

Location: 3740 Chestnut Street

Case No.: P.C. No. 2023-11

Synopsis: The applicant is requesting approval of the Concept Plan for an industrial building at 3740 Chestnut Street

Prepared By: Elizabeth Hanson

Staff Recommendation: Motion to recommend approval

BACKGROUND
The site at 3740 Chestnut Street was the former Treehouse site since 1991. Treehouse specialized in providing a safe space for teens to use and build relationships. They have since vacated the site and sold the property to Audrius Asakenas who plans to redevelop.

Project Goals
The identified goals for this project include the following:

- Provide business and employment opportunities for family-owned and start-up entrepreneurs within the city of Chaska.
- Provide the ability for small businesses to start and then expand their business elsewhere in the Chaska area so a new start-up can utilize the same space and continue the growth cycle.
- Develop an under-utilized site to a job sustaining and taxable benefit for the city of Chaska.
- Develop the site by utilizing the natural topography and environmental amenities to create a project that complements the surrounding area.
- Uphold the small-town value initiative of the city by being a locally owned family business supporting families and businesses in Chaska and the surrounding area.

Neighborhood Meeting
The City of Chaska requires neighborhood meetings prior to a Concept Plan application being submitted with the city per zoning ordinance Section 15.08.120. The purpose of this is *to provide an opportunity for informal communication between applicants, occupants, and owners of nearby properties that may be affected by a proposed development application, educate the occupants and owners about the proposed development application, receive comments and address concerns about the proposed development application, incorporate feedback and input into development proposals*

wherever possible, and proactively resolve conflicts and outstanding issues, where possible.

The applicant conducted a neighborhood meeting on Tuesday, February 7th from 5:30pm-7:00pm. Meeting notices were mailed to the property owners within 500 feet of the site. No one showed up to the meeting.

Per City staff request, the applicant reached out individually to some of the tenants within Pondview to establish a dialogue. To date, the applicant has received responses from River Valley Dance and Edwards Sales. It appears the responses received were supportive of the project (attached in the packet). The applicant also plans to reach out to TEL directly.

Zoning & Comprehensive Plan
Currently, the site is zoned Open (O), which is a "holding zone" until it develops and a proper zoning district can be put in place.

The Comprehensive Plan guides this piece of property for Industrial, which allows for the following: "*Lots or parcels guided for buildings and associated office, administrative and truck service facilities for the following activities: manufacturing, fabrication, assembly, processing, packaging, compounding or storage of materials, goods and products. Also included are scientific research, investigation, testing, experimentation, wholesaling (except live animals), contractors, goods movement facilities, communication, and utilities.*"

The proposal to add an industrial building is consistent with the Comprehensive Plan's guidance for the site.

Existing Conditions
The site is located on the north side of Chaska. The site is 2.18 acres and contains a single-family home, detached garage, and scattering of trees. The site currently shares highway access with the Pondview development to the south.

Adjacent properties
The site is bounded on the south by Pondview (industrial); the north by land owned by TEL; the east by Highway 41 (Chestnut Street); and the west by Big Woods Lake.

CURRENT REQUEST
The applicant and property owner, Audrius Asakenas, is requesting Concept Plan approval for the construction of a multi-tenant office/warehouse/manufacturing building totaling approximately 16,000 square feet in size and one-story tall. This facility is set up to provide space for 8 tenants with square footage around 1,900.

Anticipated Tenants
The tenants anticipated are typically small, emerging businesses that don't require a lot of space. Most of these companies are transitioning from working out of their homes or even self-storage spaces, and are in need of larger spaces. The tenants this building is targeted for will range in uses including small production operations, manufacturing,

product distribution or professional services that need space for equipment. They typically use their own vehicles or a business van or truck. All business activities will be conducted in the building or off site. The property owner states that they will not allow outdoor storage or vehicle repair businesses as tenants.

This building and anticipated tenants will be similar to Chaska Tech Center that was approved in 2022 off of Fire Lane and Chaska Boulevard near downtown Chaska.

Site Layout
The site is situated on the west side of Highway 41. The proposed building is situated in the middle of the site with parking and drive aisles circling around it. The vehicle circulation is cut off on the west side of the site due to wooded steep slope setbacks. It is a rectangular building with garage doors oriented on the north and south sides of the building. Access to the site will be gained from the existing shared access on Highway 41.

Building Location/Design
The location of the building sits near the middle of the site. The location anticipates the highway 41 setback to the east and wooded steep slope setbacks to the west. The building is rectangular and will be one-story tall (approximately 38 feet at its tallest point). The building will total approximately 16,000 square feet and provide 8 total tenant spaces. Garage and pedestrian doors will be oriented on the north and south sides of the building. Each tenant will have separate signage above their space. It is unclear if these signs will be cohesive. Staff would advise the applicant to create a sign plan to indicate the type of signs that will be used. This will be needed at preliminary submittal.

The proposed building will be constructed with masonry/stone base, EIFs, aluminum wood-look siding, glass, and overhead metal doors. The applicant states the materials chosen were to emulate a more neutral/natural look to match the surrounding context.

The City of Chaska has certain building design and material requirements for industrial buildings. A portion of it is stated as follows:

"Industrial and warehouse buildings shall use at least two (2) different Class I materials and shall be composed of at least thirty (30) percent Class I material, and at least one (1) Class II materials and be composed of at least thirty (30) percent Class II materials; and not more than forty (40) percent of Class III materials."

Building Materials	
Class I	Masonry (Natural Stone) and Glass (% unknown)
Class II	EIFs, Aluminum Siding (% unknown)
Class III	None
CLASS I REQUIRED	30%; two different materials
CLASS II REQUIRED	30%; one material

PROVIDED	Unknown

The applicant will have to provide in the preliminary how they meet the Building Design and Materials ordinance for industrial buildings.

In order to be classified as a Class I material, any brick used needs to be a full modular face brick. Or if stone is used it must be a natural stone. The applicant will have to indicate that on their elevation plans in the preliminary submittal.

The overall building provides a variety of material applications. In staff's opinion, it appears that the elevations read too "piece-meal" and the materials do not capture a cohesive design. Staff would advise the applicant to further explore additional design elements on the building that could help harmoniously blend the building materials more. Also, the applicant should look into the color palette of the building materials used that show how the building will fit into Chaska. This shall be addressed during their preliminary submittal.

Additionally, because this building will be a multi-tenant building with multiple storefronts, it will be important that the front doors used on the west, south and east facades are decorative, or provide for some interest (i.e. glazing and paneling). Plain, gray, metal doors do not appear to fit in with the rest of the building, nor provide an articulated front façade. The same can be said for the eight overhead doors on the north and south facades. These doors, since they will be highly visible, shall also be decorative. The applicant will be required to provide for decorative front doors and overhead doors that are oriented on the south and north facades during their preliminary submittal.

Setbacks
The required setbacks for the site are as follows:

BUILDING SETBACKS	
Direction	**Setback**
Highway 41	150 feet from centerline
Big Woods Lake	50 feet from edge
Wooded Steep Slope	50 feet
Interior Property Lines	15 feet

PARKING SETBACKS	
Direction	**Setback**
Highway 41	90 feet from centerline
Wooded Steep Slope	50 feet from edge
Interior Property Lines	5 feet

Parking/Access/Circulation
44 parking spaces (20 initial installation; 24 proof of parking) are proposed as a part of this project. The following chart summarizes the overall parking demand on the site, based on the approximated sizes of the conceptual uses.

Uses	Approx. Size	Code Req.	Est. Parking Req.
Manufacturing	16,000 sf	1ps/350sf	46 parking spaces
[redacted]		**REQUIRED**	**46 parking spaces**
[redacted]		**PROVIDED**	**44 parking spaces**

According to this table the applicant is not meeting the required amount of parking spaces needed for the use of the site. The site plan will need to show how it meets parking in the preliminary submittal.

The access into the site will be from a shared access at Highway 41. This access is shared with the southern Pondview buildings/tenants. A shared access easement will be required across the highway 41 access (if there isn't one already) to allow for this site and the adjoining sites to have full use of this access. This easement will need to be recorded at time of final plat recording.

MnDOT and City staff are currently working with all property owners who share the access to determine a project to improve safety at the development entrance. Conversations surrounding this topic are still ongoing.
The TEL property (3455 Lyman Blvd) directly abuts the northern side of this site. There appears to be buildable land on the TEL property that is situated immediately north of 3740 Chestnut Street. Because of this it will be important that this site preserve access through their site so that TEL can access this area. Staff notes this due to the access restrictions that exist on Highway 41, and it appears the south side of the TEL property can only obtain vehicle access out to the highway through 3740 Chestnut Street's site.

The applicant states that the site will mostly consist of employees and business vehicles. Due to the nature of the targeted businesses, it is expected that small trucks will be utilized by the businesses for shipping and deliveries, with the largest trucks being no more than 30 feet in length.

The site provides dead end parking on the west sides of the site. Staff would argue that this layout provides poor circulation for users but also emergency vehicles. It is unclear how the site would be able to accommodate a fire truck. The site plan will need to show a fire truck turning exhibit at preliminary submittal.

Landscaping & Tree Preservation
The table below indicates the landscaping requirements for this site and how the applicant meets or does not meet them:

LANDSCAPING REQUIREMENTS & PROPOSED		
	Required	**Proposed**
Overstory Trees	50 caliper inches (18 trees)	unknown
Understory Trees	5	unknown
Shrubs	53	unknown

The applicant will have to show in their preliminary submittal how they meet these requirements.

Planting islands will be required in the parking lot areas. The planting islands will need to take up at least 10% of the total parking area and be at least 10 feet wide. This will need to be shown on the landscape plan at preliminary submittal.

The site is currently wooded, and it appears that wooded steep slopes exist on the west side. This area will need to be evaluated with City staff to determine the delineations of wooded steep slopes. In addition, it will be important for the applicant to evaluate tree preservation on the site, where possible. Significant trees such as oaks and maples should be given higher priority for preservation, if present.

Lighting
Any lighting proposed for this plan should be fully screened and face downward. The applicant will have to show in their preliminary submittal how they meet the City's lighting ordinance.

Utilities
A watermain exists along the Highway 41 and is available for connection while public gravity sanitary sewer is not. By code the property does not require a connection to City sewer as it falls outside the distance threshold for available public sewer. Gravity sewer does exist in the area and would need to be explored further to serve the property should the applicant wish to pursue the option. The details of sewer extensions would be more understood should this be a part of the preliminary process.

Stormwater
The applicant will work with the City to determine the drainage necessities for the site.

Deadline for Agency Actions
The City of Chaska received the complete application for this request on Tuesday, March 7, 2023. Pursuant to Minnesota State Statutes the City must act on this request by Saturday, May 6, 2023 (60 days), however the City can provide the petitioner with written reasons for an additional 60-day review period, which would extend to a deadline of **Wednesday, July 5, 2023 (120 days)**. The City may with the petitioner's consent extend the review period beyond the Wednesday, July 5, 2023 date. Lastly, if the City denies the petitioners request "… it must state in writing the reasons for the denial at the time it denies the request."

PLANNING COMMISSION ACTION REQUESTED:

Motion to recommend approval to the City Council of the Concept Plan for 3740 Chestnut Street, subject to the following conditions:

1. **Approvals shall be based on the following graphic exhibits:**
    a. **Project Narrative (pgs 1-4)**
    b. **Aerial Exhibit, submitted by Moore Engineering, Inc.**
    c. **Site Exhibit (pg 1), submitted by Moore Engineering, Inc., dated January 16, 2023**
    d. **GIS Slope Analysis, submitted by Moore Engineering, Inc., dated December 14, 2022**
    e. **Existing Conditions (pg 3), submitted by Moore Engineering, Inc., dated February 21, 2023**
    f. **Future Conditions (pg 4), submitted by Moore Engineering, Inc., dated February 21, 2023**
    g. **Concept Development Plan (pg 5), submitted by Moore Engineering, Inc., dated January 23, 2023**
    h. **Turning Movements, submitted by Moore Engineering, Inc.**
    i. **Schematic Floor Plan (pg SD01), submitted by Thielen & Green, dated January 20, 2023**
    j. **Schematic Elevations (pg SD02), submitted by Thielen & Green, dated January 20, 2023**
2. **Adherence with the Engineers Memo dated April 4, 2023.**
3. **Compliance with the MnDOT memo when made available.**
4. **Provision/modification of any drainage and utility easements as required by the City Engineer in the course of their review.**
5. **Provision of easements for the shared access (vehicular cross access easements) and utilities (utility easements) that service this lot, to be recorded with the plat.**
6. **Coordination with the City Engineer with regard to utilities, grading and drainage.**
7. **Installation of all site lighting at a 0 degree angle with the light source fully concealed.**
8. **Provision of a material board to be submitted at preliminary submittal.**
9. **Utilization of modular face brick or natural stone as a Class I material.**
10. **No exterior storage will be permitted.**
11. **Provision of a wooded steep slope field walk with staff to determine the wooded steep slope delineations prior to preliminary submittal.**
12. **Provision of a 50 foot building/parking setback and a 30 foot no grade/no mow setback from the edge of 18% wooded steep slopes.**
13. **Provision of hydrant placement needs to accommodate City standards for hydrant placement and fire code standards.**
14. **Provision to submit Utility and Site Plan As-Builts prior to issuing a building permit.**
15. **Any and all building signage shall be submitted separately, meet the sign ordinance, and shall obtain sign permits prior to installation.**
16. **Provision that signage for all tenants to use similar signing methods and design.**
17. **Provision of a sign plan to be submitted at preliminary.**
18. **Provision of a storm water management plan meeting City and Carver County WMO standards.**

19. **Compliance with applicable zoning requirements, in particular Section 15.28 (Special Regulations).**
20. **Provision that all mechanical equipment will be fully screened from view.**
21. **Compliance with Section 15.28.120 Building Design/Materials and Site Design.**
22. **Provision to further explore more building design elements in line with the context of Chaska, and to be addressed at preliminary submittal.**
23. **Provision to further explore more design methods to allow a more cohesive look with the material applications, and to be addressed at preliminary submittal.**
24. **Provision to further explore design methods on the east façade so it can read like a "front" façade, and to be addressed at preliminary submittal.**
25. **Coordination with Electric Department on service locations.**
26. **Provision of decorative front doors and overhead doors on the south and north facades, and to be shown on the elevations and as specs at preliminary submittal.**
27. **Provision that planting islands are provided in the parking lot areas that meet Section 15.28.070.E.4 and to be shown on the landscape plans at preliminary submittal.**
28. **Provision of a tree preservation plan to be submitted at preliminary.**
29. **Provision of a fire truck turning exhibit to be submitted at preliminary.**
30. **Provision of a truck turning exhibit showing back-ups from overhead doors**
31. **Provision to further explore vehicle circulation through the site, and the elimination of dead-end parking lots, and to be addressed at preliminary submittal.**
32. **Preservation of a vehicle access for the northern TEL property through the 3740 Chestnut Street site, and to be shown at preliminary submittal.**
33. **Provision of irrigation for the landscaped and sodded areas of the site.**

City of Chaska
Memorandum

To: **Planning Commission**
From: **Alex Mollenkamp, Assistant City Engineer**
Date: **April 4, 2023**
Subject: **3740 Chestnut Street Concept Plan**

The concept plan for 3740 Chestnut Street proposes a new small business center north of the Pondview business development area between Peavey Road and Lyman Boulevard. The existing topography drains from east to west with a central area being relatively flat with a berm located near the highway. The western edge of the site consists of steep wooded slopes extending down to the lake. The site plan will require a storm water management plan that meet City, county, and state standards. It will be important the site plan considers how stormwater will be managed while protecting the lake and integrity of the slopes neighboring the lake.

In terms of City utilities, watermain exists along the Highway 41 and is available for connection while public gravity sanitary sewer is not. By code the property does not require a connection to City sewer as it falls outside the distance threshold for available public sewer. Gravity sewer does exist in the area and would need to be explored further to serve the property should the applicant wish to pursue the option. The details of sewer extensions would be more understood should this be a part of the preliminary process.

The site has access off Highway 41 via a shared driveway with the parcels to the south. MnDOT and City staff are currently working with all property owners who share the access to determine a project to improve safety at the development entrance. The property owner has been informed of and is encouraged to participate in the ongoing discussions to consider modifying the access onto the highway.

CONCEPT PLAN NARRATIVE
3740 CHESTNUT STREET

We are proposing the development of the 2.18-acre site as a small entrepreneurial business center. It is our intent to develop the site with a single, 1-story building that provides individual warehouse/manufacturing space with a small office for local business tenants.

Neighborhood Meeting

A neighborhood meeting was held at the site on Tuesday February 7th from 5:30 to 7:00 pm. Meeting notices were mailed to the property owners within 500 feet of the site on January 26, 2023. The invitation included a description of the project and the proposed site plan. At the meeting location we created a packet of information that included maps of the surrounding area, site plan, site plan with topography, concept architectural design and potential building layout plus turning radius for typical delivery vehicles. We received no attendees at the meeting and received no communication from the invitees or anyone else. We confirmed with city staff that staff did not receive any communication for the project as well.

Per city staff request we have reached out individually to the tenant businesses within the Pondview buildings to the south of our site. We will provide the city with updates on our efforts and the correspondence that we receive. As of this time we have contacted all of the Pondview tenants and received responses from River Valley Dance and Edwards Sales (attached email) I also talked personally with Precision Heating and Cooling. All responses received were supportive of the project. We recently received contact information for the property to the north (TEL) and will be reaching out to them regarding the project.

Understanding of Place & Site Forces

The site is unique as it is an industrial guided site that is just over two-acres with minimal disturbance, except for a single-family structure and driveway. Its natural amenities of rolling topography and trees adjacent to an open water basin add to the site's unique characteristics and charm. The site slopes east to west with a relatively flat open area in the central portion of the site that extends northward into the neighboring property. This central flat area provides for a natural building location with little impact to trees. The existing home is in this area. A vegetated berm exists along the eastern edge of the site providing screening and buffer from County Road 41. The highpoint of the berm is in the northeast corner of the site sloping downward west and south where it flattens out at the shared driveway. The shared driveway provides access to the home and the Pondview business buildings to the south. The only public visibility from 41 into the site is from this access point.

The western portion of the property consists of a vegetated slope extending down to the water's edge. The slope is approximately 145 feet in depth and consists of varied trees and underbrush. Portions of the slope will be over 18%, thus requiring additional setbacks and preservation. The slope extends to the north and south creating a natural corridor along the water. The city owns the slope to the south of the site plus the land across the water which provides a publicly protected natural area. With natural slopes falling east to west it is expected that stormwater ponding will be toward the southwestern area of the site taking advantage of natural drainage patterns.

Beyond our property lines we have four distinctive neighboring uses. To the west is the above-mentioned slope and water's edge. The land to the north is vacant and undisturbed. The site features of this land generally mimic our own with a flat central portion that slopes down to the west and up to the east where it creates a berm along County Road 41. The land to the east is County Road 41 with a fully developed business park beyond. To the south are the Pondview business buildings. The buildings are located in the central portion of the site with parking to the east and a vegetative slope to the west.

The development pattern in this area is generally prescribed by County Road 41 to the east and the protected slope and water body to the west. By placing buildings in the central flat area of the sites you are minimizing tree loss and grading plus taking advantage of the natural screening of the eastern berm and the vista views to the west.

Like Pondview, it is expected that building placement will take advantage of the views to the west with the building design to incorporate the natural grades. The parking lot will likely be to the eastern side due to setbacks and favorable street access. We expect that this same development pattern will happen to the north of our site. It is our intent to talk with the property owner to the north to see if there are opportunities to work together on shared grading and/or access to minimize the need of retaining walls and pavement for parking and circulation.

Utility Services

Outside of the natural forces that will be utilized to shape this project another force is the location of city sewer services. There are no public sewer lines available to the site. The closest public line is south near the Peavey Road intersection or to the east along Peavey Road. There is a private sewer line along the west side of the southerly Pondveiw building, but not abutting our site. Another private line exists east of County Rd 41. Access to these lines will require private agreements. Without access to the existing private lines we will need to work with the city on a public service or some type of future connection with the property to the north. For temporary services we will be evaluating the existing on-site sewer system to determine if it can be utilized, or if a new system is required. City water is available from a public line along County Road 41.

Grading and Stormwater Ponding

The project site slopes east to west with an elevation change pf 52 feet. The proposed building will be constructed in the central area of the site, where the current house exists. The central area is relatively flat with a grade change of approximately 12 feet. The western side consists of slopes over 18% and we will be providing the necessary setback and erosion controls to protect the slope and water body. The concept plan shows a projected top of 18% slope based on GIS mapping and LIDAR contours. The top of slope will need to be field verified by city staff. A vegetative berm exists along the eastern edge providing natural screening from County Road 41. Retaining walls will likely be needed on the interior side of the easterly berm and along the north property line. The height and length of the walls will be determined once the floor elevation and building pad location is approved.

Working with the natural slopes of the site we are proposing ponding along the southern edge of the site. Depending on soils conditions and stormwater requirements the pond may need to extend along the west side of the building site and/or placed underground.

Parking and Turning Movement

Vehicle traffic will mostly consist of employees and business vehicles. Due to the nature of the targeted businesses, it is expected that small trucks will be utilized by the businesses for shipping and deliveries, with the largest trucks being no more than 30-feet in length. The parking plan shows the placement and distribution of the stalls in a manner to serve each of the proposed tenant spaces. Drive isles are 24 feet with additional width in front of tenant bay doors. Sidewalks are shown to provide pedestrian access to each tenant space.

To minimize grading near the western slope we are proposing not to have a loop driveway around the building, preferring to keep the natural grades along the west undisturbed. We are showing turn-around stubs for trucks and emergency vehicles to maneuver and turn around at the south and north ends of the building. Once a topographical survey and city determination of the 18% slope are complete, we will be able to better define the circulation patterns within the site.

Other circulation consideration include utilizing a proof-of parking plan, thus reducing the number of stalls to approximately 20. This allows the potential to minimize pavement and runoff in addition to increasing landscape and traffic maneuverability. Another consideration is connecting our parking and traffic circulation with the property owner to the north. By extending an access to the north property we can minimize future curb cuts onto County Road 41 and possibly share parking and vehicle circulation.

Building Tenants

The targeted tenant is a small business operator with few employees. The typical business will likely be a former home-occupation business that is expanding and needs a slightly larger place away from a residential neighborhood. The type of work generally consists of small production operations, manufacturing, product distribution or professional services that need space for equipment. They typically use their own vehicles or a business van or truck. All business activities will be conducted in the building or off site. We are not allowing outdoor storage or vehicle repair businesses as tenants.

Chaska's Core Strategies

The proposed project reinforces Chaska's Mission Statement to be the Best Small Town in Minnesota by implementing the pertinent principles of the city's Core Strategies. The key elements that are brought forward in the plan are **providing local small business entrepreneurship opportunities to an area guided for employment while encompassing environmentally sensitive surroundings.**

The site is currently underutilized per the city's comprehensive plan and long-range planning. The site is guided industrial, a land use that promotes the expansion of employment and tax base opportunities. However, it is currently zoned Open Development and is occupied by a single-unit residential home formally utilized by the school district. There are no jobs associated with the site and it provides minimal tax revenue. The proposed use will generate small business opportunities for family operations and entrepreneurs from the local area to serve the local area. The core business model is to provide space that allows for limited manufacturing, production, warehousing, distribution operations with a small office space. As these businesses grow it is anticipated they will expand their operation to another area of the city allowing a new entrepreneur to start-up a small business in Chaska to serve Chaska.

Due to the developmental and environmental complexities we believe a small development project can harmoniously nestle into the site with limited vehicle impact and public visibility. In compliance with city wetland and slope setbacks any building and parking will be 145 feet from the edge of the western waterbody. This will allow for the preservation of the trees and slope along the site's western edge thus keeping a large natural wildlife corridor and views. We will be encouraging tenants to take advantage of the natural amenities by providing a gazebo and trail on the west side of the building where employees can take time to enjoy the beauty of the area.

The style of building itself is compatible to the natural setting as a one-story single building. The building materials will consist of neutral colors and materials to match the natural surroundings with an asphalt shingled roof. We plan to provide small tenant signs, with an address at each of the tenant doors and possibly a monument sign at the site entrance with tenant names. A detailed sign plan will be submitted with the future site plan.

The west side of the building will be screened by the natural corridor and 145-foot setback. The north and east side will be below the natural grade and partially screened by a future retaining wall and an existing berm along the eastern edge of the site. The land to the north is vacant. The south side will transition into the neighboring Pondview business center which it currently shares a driveway access.

The small-town values most emphasized by this project is the purchase by a Chaska resident who wanted to start a small business to serve the local area. The owner, Audrius Asakenas, settled in the area with his wife and two children because they believed Chaska was the best place to raise a family and grow a business. They hope that this project can support others who want to make Chaska home for their families and businesses as well.

Project Goals and Guiding Principles

The guiding principles brought forward in the plan is to provide local small business entrepreneurship opportunities to an area guided for employment while encompassing environmentally sensitive surroundings. The project goals are:

- Provide business and employment opportunities for family-owned and start-up entrepreneurs within the city of Chaska.
- Provide the ability for small businesses to start and then expand their business elsewhere in the Chaska area so a new start-up can utilize the same space and continue the growth cycle.
- Develop an under-utilized site to a job sustaining and taxable benefit for the city of Chaska.
- Develop the site by utilizing the natural topography and environmental amenities to create a project that complements the surrounding area.
- Uphold the small-town value initiative of the city by being a locally owned family business supporting families and businesses in Chaska and the surrounding area.

We look forward to sharing our proposed project with you and are excited to bring this opportunity to the city.

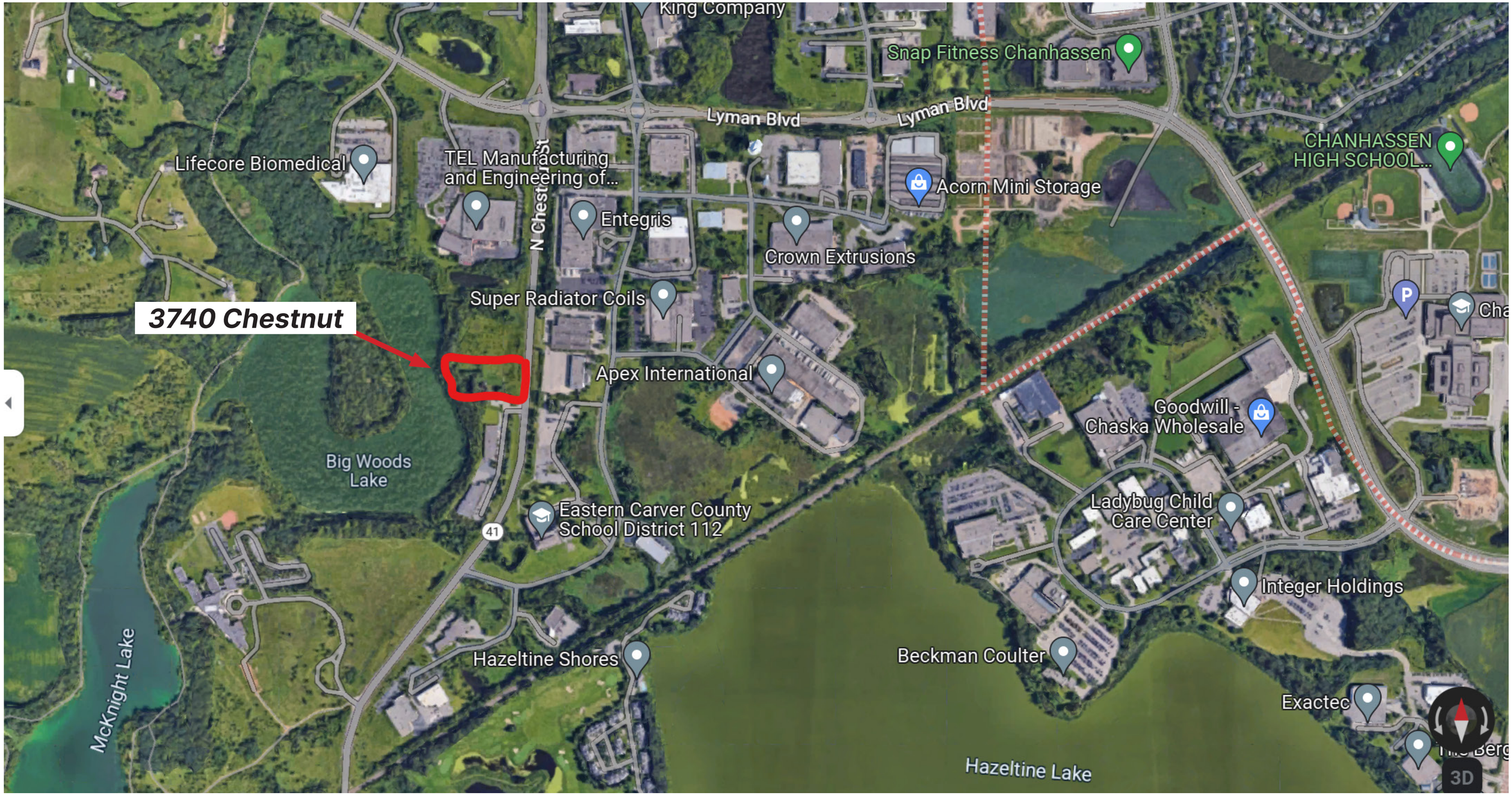

3740 Chestnut
Chaska, Minnesota 55318

moore engineering, inc.

FILE LOCATION: R:\Projects\22000\22900\22983\CIVIL\PRESENTATION\22983_SiteExhibit_9.dwg

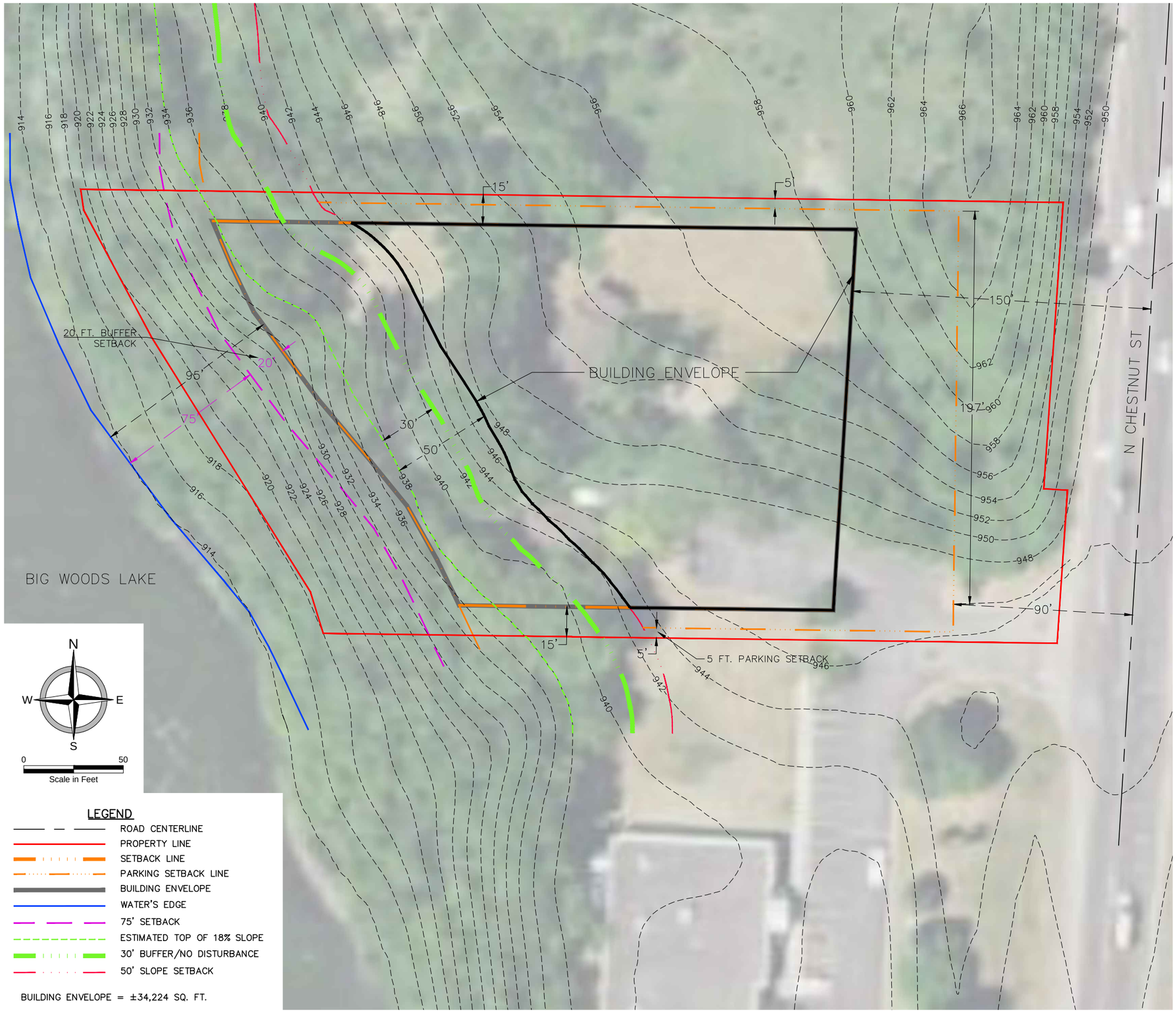

LEGEND

- ROAD CENTERLINE
- PROPERTY LINE
- SETBACK LINE
- PARKING SETBACK LINE
- BUILDING ENVELOPE
- WATER'S EDGE
- 75' SETBACK
- ESTIMATED TOP OF 18% SLOPE
- 30' BUFFER/NO DISTURBANCE
- 50' SLOPE SETBACK

BUILDING ENVELOPE = ±34,224 SQ. FT.

PRELIMINARY

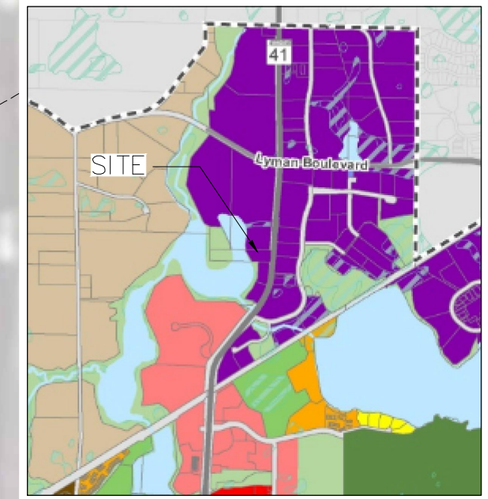

COMP PLAN

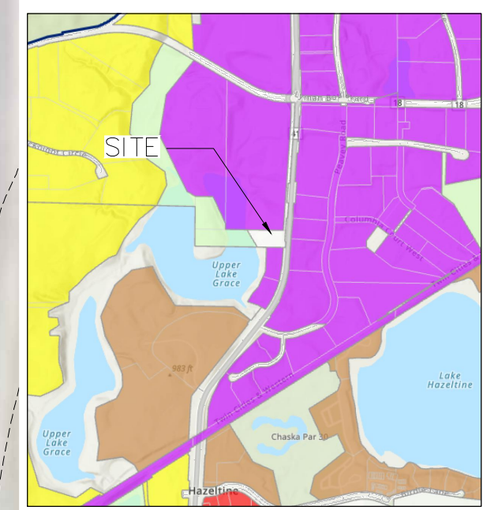

ZONING MAP

moore engineering, inc.

SITE EXHIBIT
DUE DILIGENCE
3740 N CHESTNUT ST
CHASKA, CARVER COUNTY, MINNESOTA
SITE 9

DATE:	01.16.23
REV DATE:	----
REV NUM:	----
RECORD:	----
PROJECT No.	22983
MANAGER:	TG
DESIGNER:	----
DRAFTER:	LFB
REVIEWER:	----

1

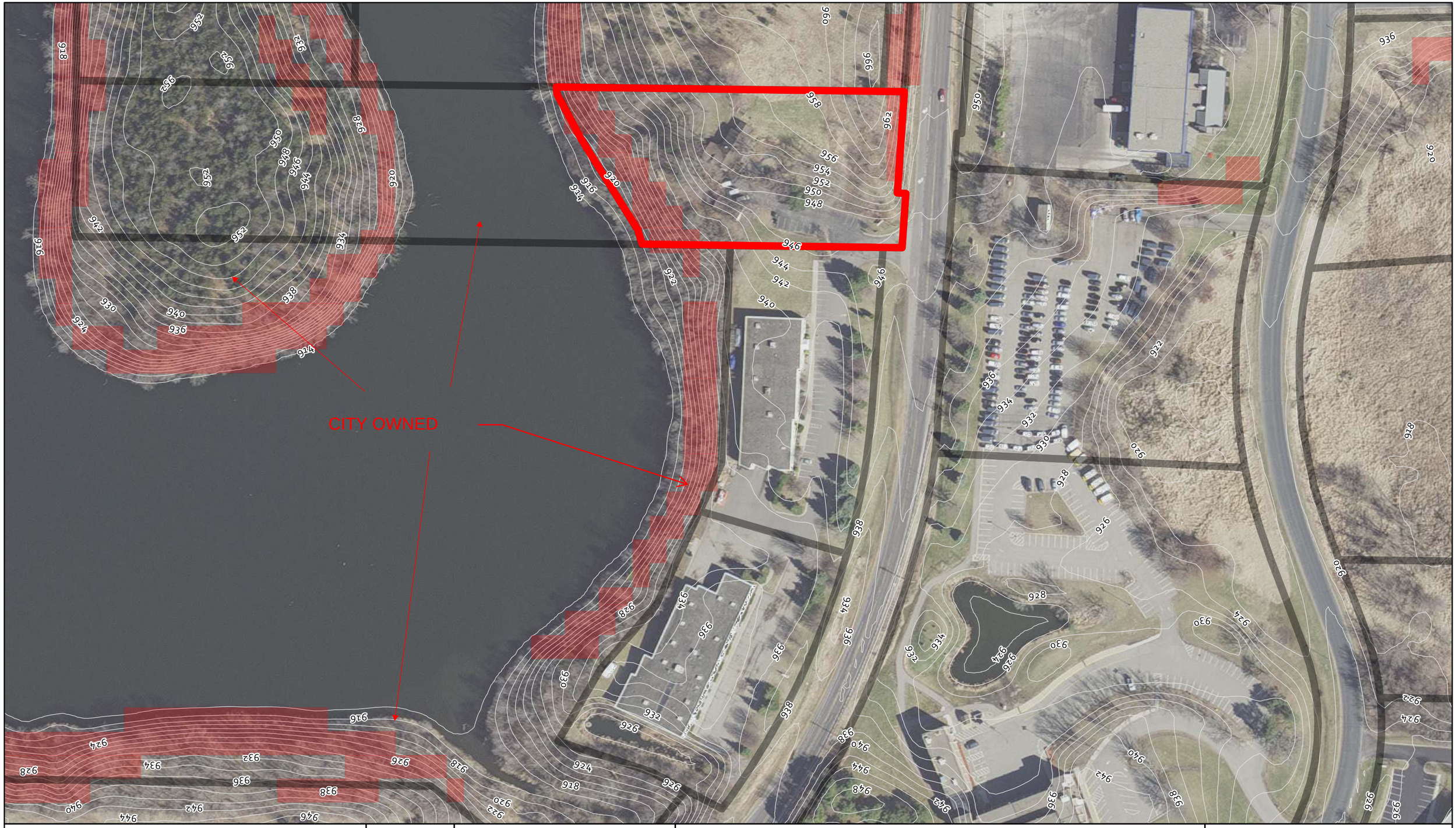

CHASKA, CARVER COUNTY, MINNESOTA
PID #300210200

Created By: GIS Date Created: 12/14/22 Date Saved: 12/19/22 Date Plotted: N/A Date Exported: 12/19/22
Plotted By: CN Parcel Date: N/A Aerial Image: 2019 County NAIP SIDS Elevation Data: Lidar
Horizontal Datum: NAD 1983 HARN Adj MN Carver Feet Vertical Datum: NAVD1988
Q:\Projects\22000\22900\22983 EfimShukalovich ChaskaMN 3740NChestnutSt\000-Miscellaneous\09-Project Management (R1)\01-GIS\10_ArcPro\10_ArcPro.aprx

N
W E
S

Map Scale: 1:1,500

0 55 110 220 Feet

Legend

GIS SLOPE ANALYSIS Source: Digital Elevation Model from USGE TNM Download V2, nationalmap.gov

- Parcel Boundary #300210200
- Parcel Boundary
- Contours 2 ft
- Slope 18% or higher

moore engineering, inc.

FILE LOCATION: R:\Projects\22000\22900\22983\CIVIL\PRESENTATION\22983_ExistingConditions.dwg

EXISTING CONDITIONS

PROJECT CONTEXT MAP – GOOGLE EARTH AERIAL (N.T.S.)

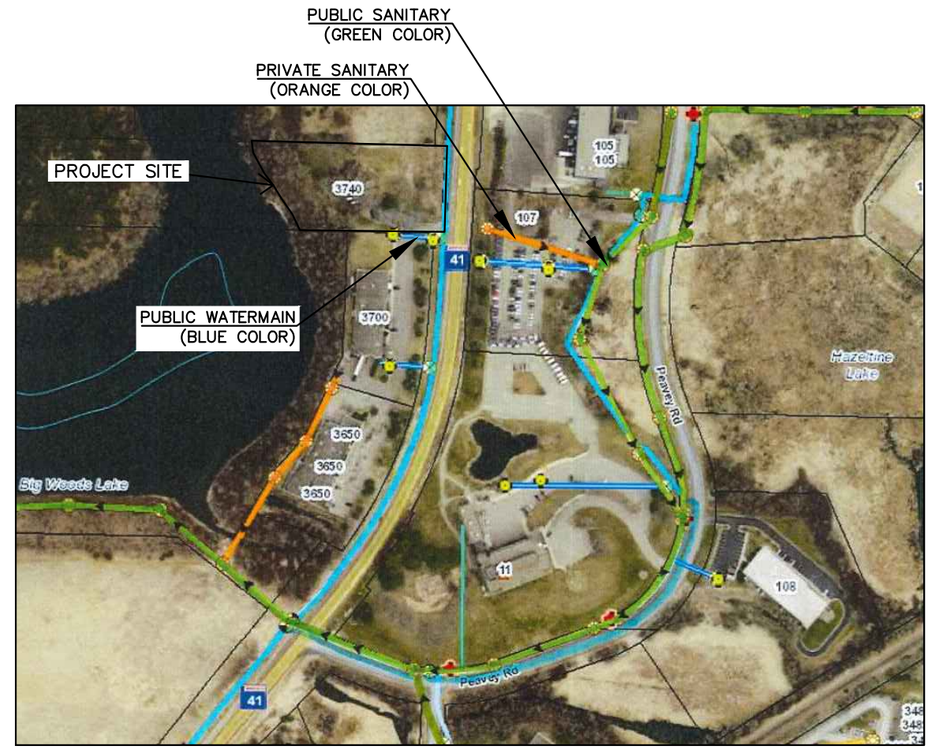

EXISTING UTILITIES MAP – FROM CITY OF CHASKA (N.T.S.)

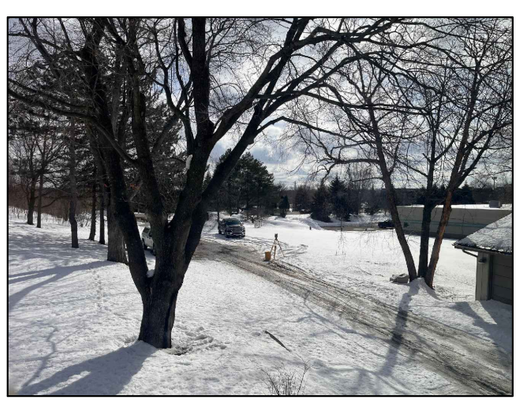

1. VIEW LOOKING EAST TOWARD HWY 41

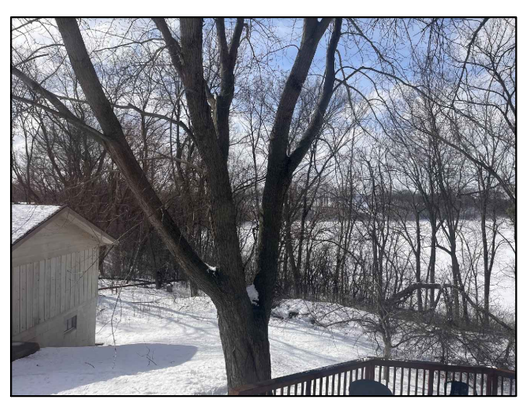

2. VIEW LOOKING SOUTHWEST ACROSS BIG WOODS LAKE

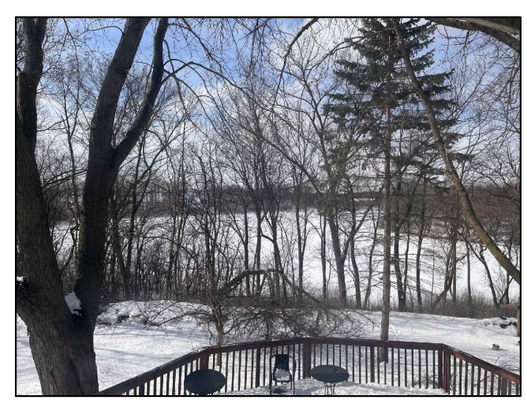

3. VIEW LOOKING WEST ACROSS BIG WOODS LAKE

4. VIEW LOOKING NORTHWEST ACROSS BIG WOODS LAKE

VIEWS FROM INTERIOR OF LOT

PRELIMINARY

moore engineering, inc.

EXISTING CONDITIONS
DUE DILIGENCE
3740 N CHESTNUT ST
CHASKA, CARVER COUNTY, MINNESOTA

DATE:	02.21.23
REV DATE:	----
REV NUM:	----
RECORD:	----
PROJECT No.	22983
MANAGER:	TG
DESIGNER:	----
DRAFTER:	CEF
REVIEWER:	----

3

FILE LOCATION: R:\Projects\22000\22900\22983\CIVIL\PRESENTATION\22983_FutureConditions.dwg

EXTERIOR VIEWS FROM CR 41

N
W E
S

0 100
Scale in Feet

PRELIMINARY

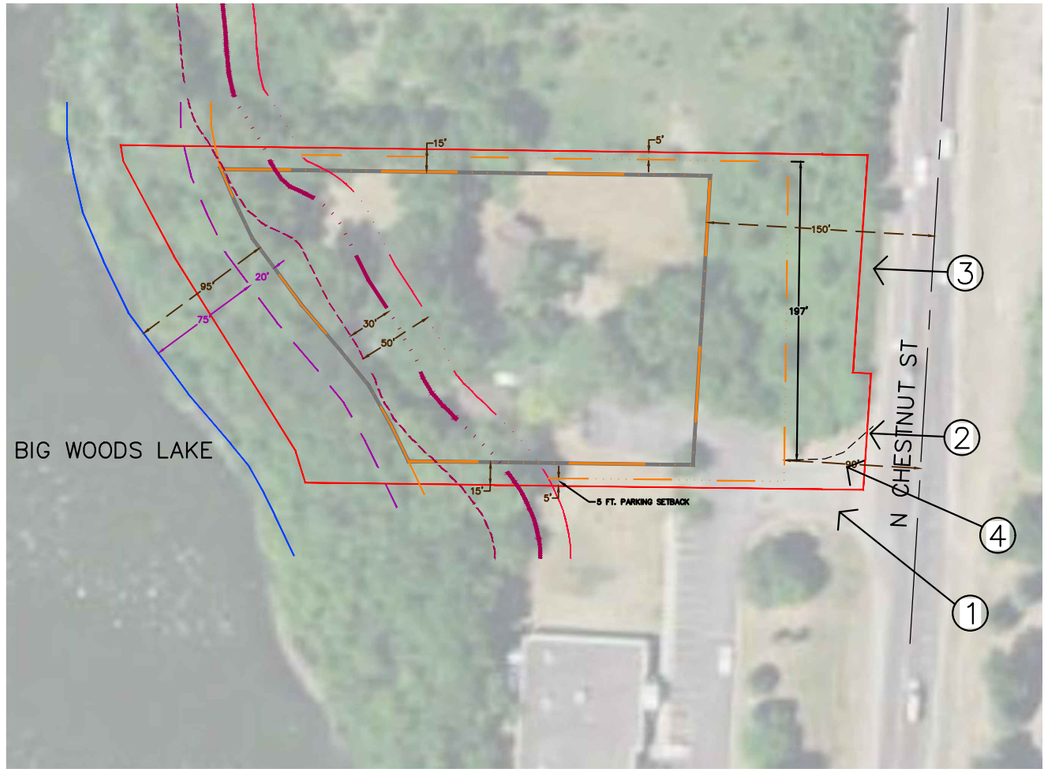

SITE PLAN – SCALE: 1"=100'-0"

4. ELEVATED STREET VIEW LOOKING NORTHWEST TOWARDS SITE

1. VIEW LOOKING NORTHWEST INTO SITE

2. VIEW LOOKING WEST ACROSS EXISTING BERM

3. VIEW LOOKING WEST ACROSS EXISTING BERM

moore engineering, inc.

FUTURE CONDITIONS
DUE DILIGENCE
3740 N CHESTNUT ST
CHASKA, CARVER COUNTY, MINNESOTA

DATE:	02.21.23
REV DATE:	----
REV NUM:	----
RECORD:	----
PROJECT No.	22983
MANAGER:	TG
DESIGNER:	----
DRAFTER:	CEF
REVIEWER:	----

4

FILE LOCATION: R:\Projects\22000\22900\22983\CIVIL\PRESENTATION\22983_SiteMeetingExhibit_B.dwg

N
W E
S
0 50
Scale in Feet

PRELIMINARY

moore engineering, inc.

LEGEND

- FD FRONT DOOR LOCATION
- PROPOSED TREE
- ROAD CENTERLINE
- PROPERTY LINE
- SETBACK LINE
- BUILDING ENVELOPE
- WATER'S EDGE
- 75' BUFFER
- PROPOSED SLOPE SETBACK
- BUILDING
- PARKING LOT
- PROOF OF PARKING
- 6' WIDE SIDEWALK
- POND
- PARKING STALLS (9'x20')
- (44) # OF PARKING STALLS

BUILDING/PARKING ENVELOPE = ±49,611 SQ. FT.

CONCEPT DEVELOPMENT PLAN

SITE EXHIBIT
DUE DILIGENCE
3740 N CHESTNUT ST
CHASKA, CARVER COUNTY, MINNESOTA

DATE:	01.23.23
REV DATE:	----
REV NUM:	----
RECORD:	----
PROJECT No.	22983
MANAGER:	TG
DESIGNER:	----
DRAFTER:	LFB
REVIEWER:	----

5

FILE LOCATION: C:\MOORE-CAD\BENTLEY\MICROSTATION\Common\Project Working Files\22983_SiteMeetingExhibit_8.dwg

N
W E
S
0 50
Scale in Feet

PRELIMINARY

6

moore engineering, inc.

LEGEND

- FD FRONT DOOR LOCATION
- PROPOSED TREE
- ROAD CENTERLINE
- PROPERTY LINE
- SETBACK LINE
- BUILDING ENVELOPE
- WATER'S EDGE
- 75' BUFFER
- PROPOSED SLOPE SETBACK
- BUILDING
- PARKING LOT
- PROOF OF PARKING
- 6' WIDE SIDEWALK
- POND
- PARKING STALLS (9'x20')
- (44) # OF PARKING STALLS

BUILDING ENVELOPE = 48,250 SQ. FT.

TURNING MOVEMENTS: SU-30
SINGLE UNIT TRUCK
DUE DILIGENCE
3740 N CHESTNUT ST
CHASKA, CARVER COUNTY, MINNESOTA

DATE:	01.31.23
REV DATE:	----
REV NUM:	----
RECORD:	----
PROJECT No.	22983
MANAGER:	TG
DESIGNER:	----
DRAFTER:	JJN
REVIEWER:	----

FILE LOCATION: C:\MOORE-CAD\BENTLEY\MICROSTATION\Common\Project Working Files\22983_SiteMeetingExhibit_8.dwg

N
W E
S
0 50
Scale in Feet

PRELIMINARY

moore engineering, inc.

LEGEND

- FD FRONT DOOR LOCATION
- PROPOSED TREE
- ROAD CENTERLINE
- PROPERTY LINE
- SETBACK LINE
- BUILDING ENVELOPE
- WATER'S EDGE
- 75' BUFFER
- PROPOSED SLOPE SETBACK
- BUILDING
- PARKING LOT
- PROOF OF PARKING
- 6' WIDE SIDEWALK
- POND
- PARKING STALLS (9'x20')
- (44) # OF PARKING STALLS

BUILDING ENVELOPE = 48,250 SQ. FT.

TURNING MOVEMENTS: SU-30
SINGLE UNIT TRUCK
DUE DILIGENCE
3740 N CHESTNUT ST
CHASKA, CARVER COUNTY, MINNESOTA

DATE:	01.31.23
REV DATE:	----
REV NUM:	----
RECORD:	----
PROJECT No.	22983
MANAGER:	TG
DESIGNER:	----
DRAFTER:	JJN
REVIEWER:	----

Turning Movements

TYPICAL 30 FOOT TRUCK

moore engineering, inc.

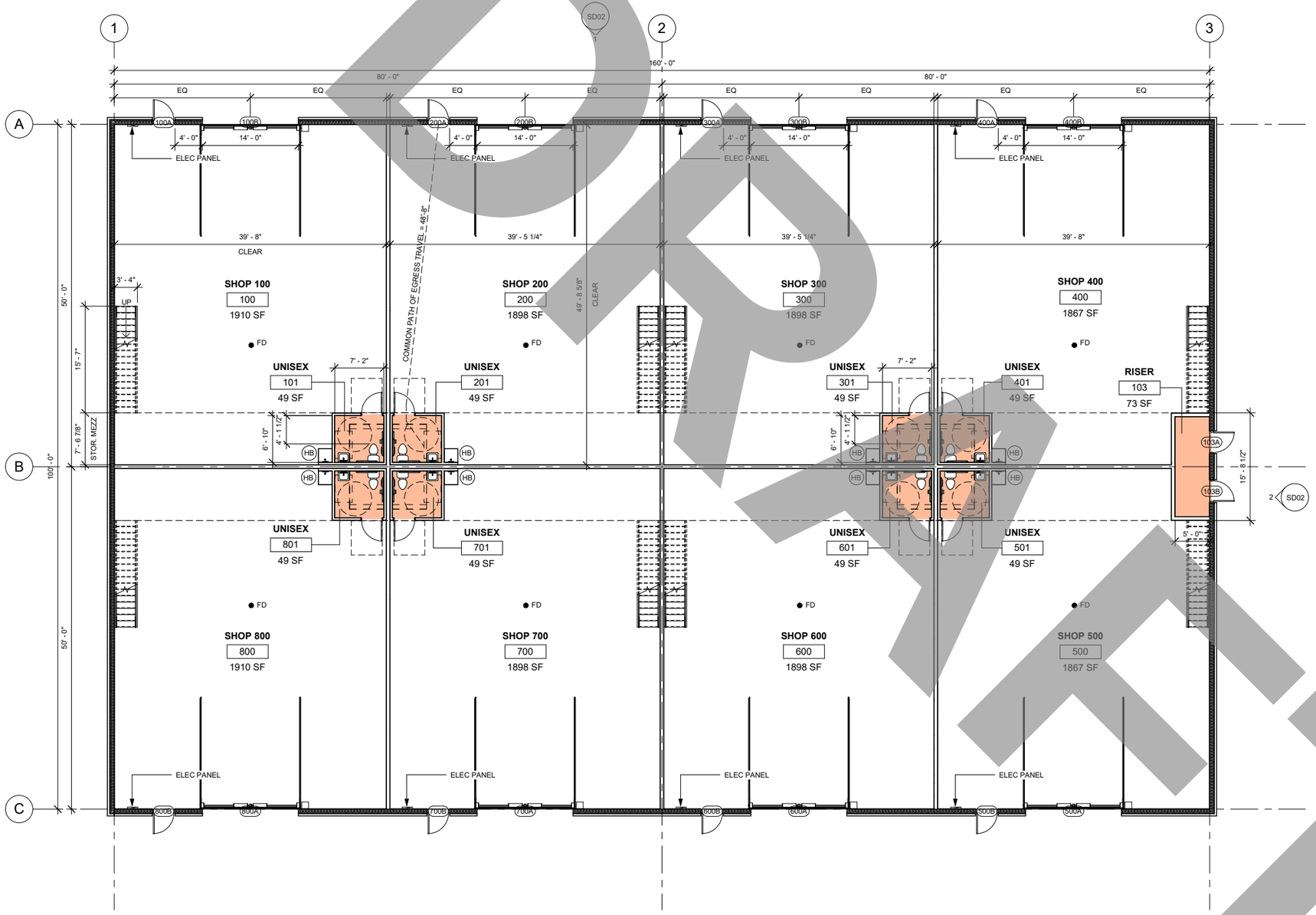

1 SCHEMATIC LAYOUT
1/8" = 1'-0"

CODE INFORMATION

APPLICABLE CODES

BUILDING CODE:	2020 MINNESOTA STATE BUILDING CODE
ENERGY CODE:	2020 MINNESOTA ENERGY CODE
ACCESSIBILITY:	2020 MINNESOTA ACCESSIBILITY CODE
MECHANICAL:	2020 MECHANICAL AND FUEL GAS CODE
PLUMBING:	2020 MINNESOTA PLUMBING CODE
FIRE:	2020 MINNESOTA FIRE CODE
ELECTRICAL:	MINNESOTA ELECTRICAL CODE

CHAPTER 3: USE AND OCCUPANCY CLASSIFICATION

PROPOSED OCCUPANCY: "F-1" (MODERATE-HAZARD FACTORY INDUSTRIAL)

CHAPTER 5: BUILDING HEIGHTS AND AREAS

	PROJECT AREA:	16,000 SF
	CONSTRUCTION TYPE:	V-B
	BUILDING SPRINKLED:	YES
504.3	ALLOWABLE BUILDING HEIGHT:	60'-0"
504.4	ALLOWABLE STORIES:	2 STORIES
506.2	ALLOWABLE AREA:	34,000 SF ALLOWABLE

CHAPTER 6: TYPES OF CONSTRUCTION

EXISTING BUILDING CONSTRUCTION TYPE:	V-B
PRIMARY STRUCTURAL FRAME:	0
EXTERIOR BEARING WALLS:	0
INTERIOR BEARING WALLS:	0
NONBEARLING EXTERIOR WALLS AND PARITIONS:	**0 (10 < X < 30)**
NONBEARING INTERIOR WALLS AND PARTIONS:	0
FLOOR CONSTRUCTION:	0
ROOF CONSTRUCTION:	0

CHAPTER 8: INTERIOR FINISHES

OCCUPANCY GROUP:	"F-1" (MODERATE-HAZARD FACTORY INDUSTRIAL)
SPRINKLED:	YES

803.13	INTERIOR EXIT STAIRWAYS AND RAMPS AND EXIT PASSAGEWAYS:	C
	CORRIDORS AND EXIT ENCLOSURE FOR EXIT ACCESS STAIRWAYS:	C
	ROOMS AND ENCLOSED SPACES:	C

CHAPTER 10: MEANS OF EGRESS

1004 FUNCTION OF SPACE: INDOOR

ROOM#	ROOM NAME	LOAD FACTOR (PER 1004.5)	OCCUPANT LOAD
• 100	SHOP 100	200 / 1910	009.55
• 200	SHOP 200	200 / 1899	009.45
• 300	SHOP 300	200 / 1899	009.45
• 400	SHOP 400	200 / 1868	009.34
• 500	SHOP 500	200 / 1868	009.34
• 600	SHOP 600	200 / 1899	009.45
• 700	SHOP 700	200 / 1899	009.45
• 800	SHOP 800	200 / 1910	009.55
	TOTAL OCCUPANT LOAD:		**075.58**

1006.2	NUMBER OF EXITS:	8 REQUIRED; 8 PROVIDED
1006.2.1	COMMON PATH OF EGRESS TRAVEL:	<100'-0" REQUIRED; 48'-8" PROV
1017.2	EXIT ACCESS TRAVEL DISTANCE:	<250'-0" REQUIRED; 48'-8" PROV
1020.1	CORRIDORS CONSTRUCTION:	0-HOUR RATED WITH EXISTING SPRINKLER SYSTEM

CHAPTER 29: PLUMBING SYSTEMS

2902.01 MINIMUM NUMBER OF FIXTURES

- GROUP "F-1" (MODERATE-HAZARD FACTORY INDUSTRIAL):
  - REQUIRED: 0.00 WC, 0.00 LAV
    - WC: 1 PER 100 PER SEX
    - LAV: 1 PER 100 PER SEX
    - SERVICE SINK: 1
    - *FOOTNOTE "H" A DRINKING FOUNTAIN SHALL NOT BE REQUIRED IN BUILDINGS OR TENANT SPACES HAVING AN OCCUPANT LOAD OF LESS THAN 50.*
    - *2902.2 SEPARATE FACILITIES:*
      1. SEPARATE FACILITIES SHALL NOT BE REQUIRED IN STRUCTURES OR TENANT SPACES WITH A TOTAL OCCUPANT LOAD, INCLUDING BOTH EMPLOYEES AND CUSTOMERS, OF 25 OR LESS.
  - PROVIDED: 0.75 WC, 0.75 LAV, 1 SERVICE SINK
    - 75.58 / 2 = 037.79 MALE/ FEMALE
      1. 037.79/ 100 = 0.37 WC EACH
      2. 037.79/ 100 = 0.37 LAV EACH

CITY STAMP AREA

THIELEN & GREEN
2051 RED OAK LANE
LINO LAKES, MN 55038
763-553-7927
WWW.TANDGARCH.COM

CHESTNUT BUSINESS PARK LLC
15 STUBBS BAY RD
ORONO, MN 55359
651-278-2510

CHESTNUT BUSINESS PARK

3740 CHESTNUT ST
CHASKA, MN 55318

ISSUE	DATE
CONCEPTUAL DESIGN	01/20/2023
SCHEMATIC DESIGN	
DESIGN DEVELOPMENT	
PERMIT & BID SET	
FOR CONSTRUCTION	

I HEREBY CERTIFY THAT THIS PLAN, SPECIFICATION OR REPORT WAS PREPARED BY ME OR UNDER MY DIRECT SUPERVISION AND THAT I AM A DULY LICENSED ARCHITECT UNDER THE STATE LAWS OF MINNESOTA

NOT FOR CONSTRUCTION

KRIS THIELEN

REGISTRATION NO: 59237 DATE: 01/23/2023

REVISION SCHEDULE

NO.	DESCRIPTION	DATE

SCHEMATIC FLOOR PLAN

Project Number	140_2023
Date	01/23/2023
Drawn By	KPG
Checked By	KPG, KMT

SD01

Scale **As indicated**

1/23/2023 9:34:56 AM

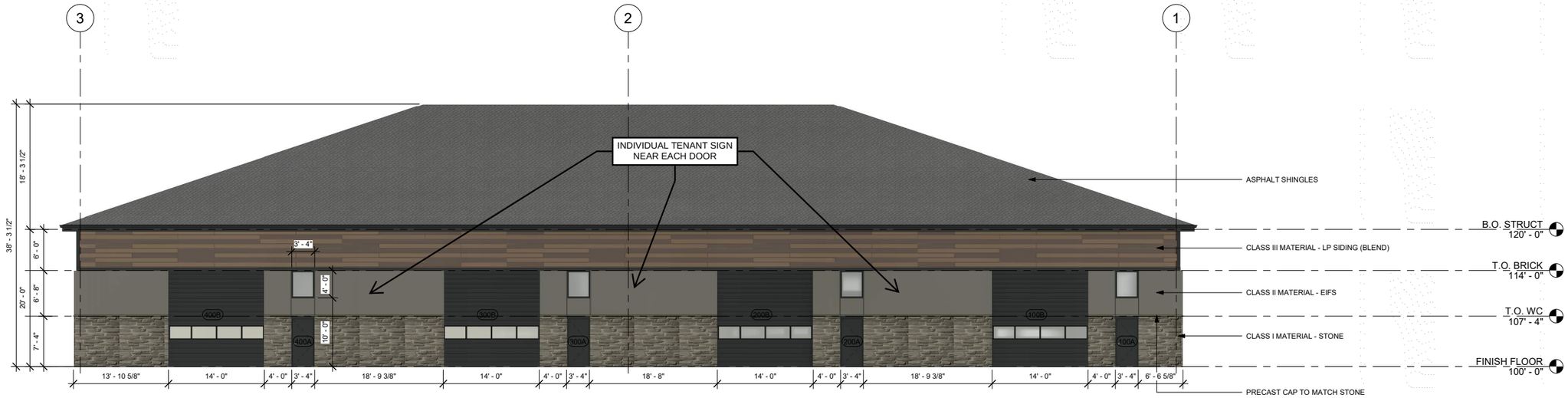

1 EXTERIOR ELEVATION @ N/S
1/8" = 1'-0"

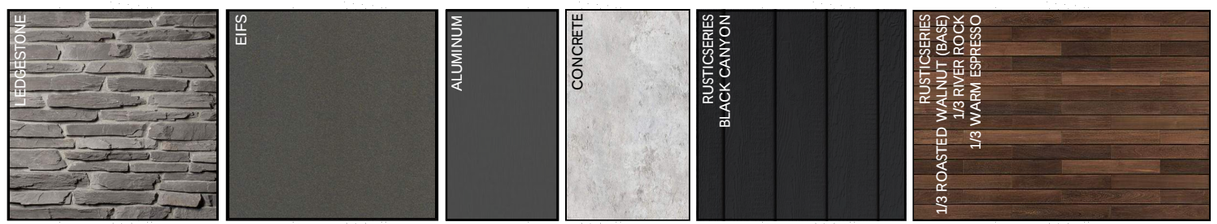

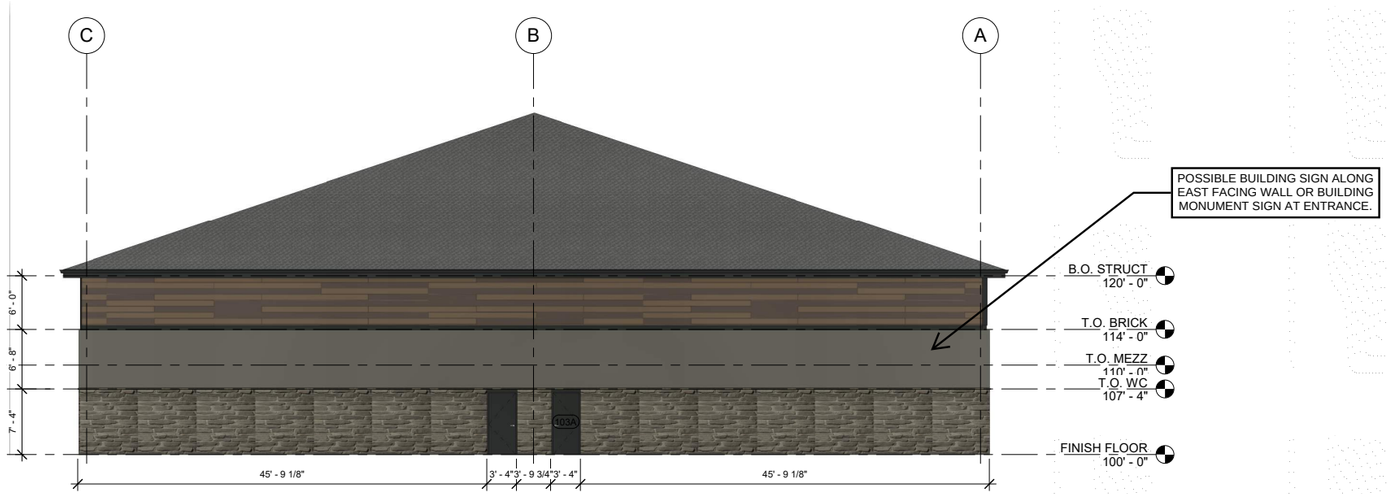

2 EXTERIOR ELEVATION @ EAST
1/8" = 1'-0"

CITY STAMP AREA

THIELEN & GREEN
2051 RED OAK LANE
LINO LAKES, MN 55038
763-553-7927
WWW.TANDGARCH.COM

CHESTNUT BUSINESS PARK LLC
15 STUBBS BAY RD
ORONO, MN 55359
651-278-2510

CHESTNUT BUSINESS PARK

3740 CHESTNUT ST
CHASKA, MN 55318

ISSUE	DATE
CONCEPTUAL DESIGN	01/20/2023
SCHEMATIC DESIGN	
DESIGN DEVELOPMENT	
PERMIT & BID SET	
FOR CONSTRUCTION	

I HEREBY CERTIFY THAT THIS PLAN, SPECIFICATION OR REPORT WAS PREPARED BY ME OR UNDER MY DIRECT SUPERVISION AND THAT I AM A DULY LICENSED ARCHITECT UNDER THE STATE LAWS OF MINNESOTA

NOT FOR CONSTRUCTION

KRIS THIELEN

REGISTRATION NO: 59237 DATE: 01/23/2023

REVISION SCHEDULE		
NO.	DESCRIPTION	DATE

SCHEMATIC ELEVATIONS

Project Number	140_2023
Date	01/23/2023
Drawn By	KPG
Checked By	KPG, KMT

SD02

Scale **1/8" = 1'-0"**

1/23/2023 9:34:59 AM

January 24, 2023

NEIGHBORHOOD MEETING TUESDAY FEBRUARY 7TH, 5:30—7:00 PM

PROPOSED DEVELOPMENT OF 3740 N CHESTNUT STREET

MEETING HELD AT EXISITNG HOME, 3740 N CHESTNUT STREET

Hello Neighbors, we are inviting you to join us for an open house to review our plans for the development of 3740 N Chestnut Street. We have purchased the property and are the current owners. In considering the future use of the property we believe that a small entrepreneurial office sharing building is a good fit for the site and surrounding area. It is our intent to develop the site with a single 1-story building that would provide office space with warehouse/manufacturing space for small business tenants.

Our proposed plan is enclosed. We look forward to sharing our ideas, and yours, as we pursue this project. You are invited as part of the neighborhood meeting requirement of the city application process for neighbors within 500 feet of the site. City staff are aware of our project but will not be attending the meeting. We look forward to seeing you and hearing your thoughts on our project.

Sincerely

Audrius Asakenas,
612-865-4100

Elizabeth Hanson

From: Ted Stauber <tedstauber@edwardssales.com>
Sent: Monday, February 27, 2023 11:38 AM
To: Tom Goodrum
Cc: Audrius
Subject: RE: Proposed Development at 3740 Chestnut

Hi Tom,

I didn't see the notice for the meeting on 2/7 – may have missed it due to a heavy travel schedule lately. Thank you for contacting me though, I'll review and discuss the plans with the other building owner, Robert Braudt.

Have you been made aware of the upcoming construction of a traffic circle at HWY41 and Peavey?

Best,

Ted Stauber
President
Edwards Sales Corporation
C: 952-210-8963
O: 952-929-6794

Keeping Buildings Warm And Dry Since 1954

From: Tom Goodrum <Tom.Goodrum@mooreengineeringinc.com>
Sent: Wednesday, February 22, 2023 12:26 PM
To: Ted Stauber <tedstauber@edwardssales.com>
Cc: Audrius <audrius_asakenas@yahoo.com>
Subject: FW: Proposed Development at 3740 Chestnut

Hello Ted
I'm representing the owner (Audrius) of the parcel north of the dance studio, formally the Tree House. We are proposing to remove the existing home and construct a 16,000 square foot office/warehouse building to serve up to 8 small businesses. We held a neighborhood meeting on February 7th at the site. Notices of the meeting were mailed to the taxpayers of the properties within 500 feet of the site. We did not hear from any of the notified persons. Because we are adjacent to your business, we wanted to reach out to you directly to make sure you are aware of our project and to receive any comments you may have. Attached is the information provided for the neighborhood meeting .

We are making application for Concept Plan Review with the city where public meetings will be conducted for your consideration.

Tom Goodrum
Senior Project Manager
moore engineering, inc.

Direct 612.699.0428 | Cell 612.791.6337
2 Carlson Parkway, Suite 110, Plymouth, MN 55447
tom.goodrum@mooreengineeringinc.com | www.moreengineeringinc.com

Elizabeth Hanson

From: Rev. Robert Braudt <revrobertbraudt@yahoo.com>
Sent: Wednesday, February 22, 2023 2:45 PM
To: Tom Goodrum
Cc: jocelyn@rvdadance.com; Audrius
Subject: Re: Proposed Development at 3740 Chestnut

Tom,
Thank you for reaching out. We did not receive the notice about the February 7th meeting until after the event. It did not get flagged as urgent. Our apologies.

We wish you the best for the development of your project. Our greatest concerns would be nuisance related: smell, noise, congestion. We may need to have some communication around shared resources: driveway entrance, sewer access, lawn care, snow removal. I don't know how current you are with the Hwy 41 projects and how it will affect our driveway entrance/exit, and accessibility during construction. Many things have been promised but also seem to evaporate between meetings. The owner of 3650 to the south of us would like to connect with me regarding some challenges with snow piles, so there might be an opportunity to connect with him as well.

Look forward to staying connected.

Rev. Robert Braudt
C: 612-839-2111
RevRobertBraudt@yahoo.com

On Feb 22, 2023, at 12:23 PM, Tom Goodrum <Tom.Goodrum@mooreengineeringinc.com> wrote:

Hello Jocelyn and Robert
I'm representing the owner (Audrius) of the parcel north of the dance studio, formally the Tree House. We are proposing to remove the existing home and construct a 16,000 square foot office/warehouse building to serve up to 8 small businesses. We held a neighborhood meeting on February 7th at the site. Notices of the meeting were mailed to the taxpayers of the properties within 500 feet of the site. We did not hear from any of the notified persons. Because we are adjacent to your business, we wanted to reach out to you directly to make sure you are aware of our project and to receive any comments you may have. Attached is the information provided for the neighborhood meeting .

We are making application for Concept Plan Review with the city where public meetings will be conducted for your consideration.

Tom Goodrum
Senior Project Manager
moore engineering, inc.

Direct 612.699.0428 | Cell 612.791.6337
2 Carlson Parkway, Suite 110, Plymouth, MN 55447
tom.goodrum@mooreengineeringinc.com | www.moreengineeringinc.com

Founded 1960 · Proudly 100% employee-owned

<NEIGHBORHOOD MEETING TUESDAY FEBRUARY 7TH.docx>
<22983_SiteMeetingExhibit_8.pdf>
<Architectual Design 1 Exhibit.pdf>
<30_ foot Turning Movements_20230131 4.pdf>
<30- foot Turning Movements_20230131 3.pdf>

- MINUTES -
CHASKA CITY COUNCIL
MARCH 6, 2023

1. Closed Session
1.A. City Administrator's Annual Review
Under Minnesota Statute Section 13D.05 Subdivision 3(a) the City Council has the authority to conduct a closed session for the review of any employee under our direct supervision. The only topic of the discussion in this closed session will be the performance review of City Administrator Matt Podhradsky. The meeting will be taped, and the recording kept for three years, as required by the Minnesota Open Meeting Law. As is required by State Statute, a summary of conclusions regarding the evaluation will be given at the next open session of the Chaska City Council.

2. Open Session
Motion by Councilmember Hubbard, second by Councilmember Huang to open the meeting. Motion carried.

3. Call to Order
The meeting was called to order by Mayor Windschitl at 7:10 p.m.

5. Roll Call
Roll call was taken. Present: Mayor Windschitl and Councilmembers Grau, Hatfield, Hubbard, and Huang.

Absent: None.

Also Present: Matt Podhradsky, City Administrator; Elise Durbin, Assistant Administrator; Mike Melchert, City Attorney; Brain Jung, Director of Public Works, Ryan Seibert; Chief of Police, and Stephen Kraus, Fire Chief.

4. Pledge of Allegiance

6. Adopt the Agenda
Motion by Councilmember Grau, second by Councilmember Hatfield to adopt the agenda as presented. Motion carried.

7. Visitor Presentation
7.A. Steve Albrecht, Shakopee Mdewakanton Sioux Community – Proposal for Organics Facility and Associated Access Improvements on TH 41 south of the MN River Crossing

Steve Albrecht, Shakopee Mdewakanton Sioux Community representative, shared a presentation on the new Shakopee Mdewakanton Sioux Community Organics Recycling Facility and the associated improvements on TH 41.

Mayor Windschitl asked where the organics come from. It was explained organics comes in from yard waste and food waste from various organizations and municipalities.

Mr. Albrecht noted the truck traffic is insignificant with 100 vehicles coming on and off the site daily. Mayor Windschitl stated he has concerns about the traffic. Mr. Albrecht stated the proposed use is on the lower end of traffic for what could be on the site besides a storage facility.

Mayor Windschitl asked if the outgoing product is in bulk. Mr. Albrecht stated it is both in bulk and in bags. They can be used in landscaping and road construction projects among other things. He added the traffic impact reports were provided to Staff.

8. Approve Previous Meeting Minutes
8.A. Approve the February 27, 2023 City Council Meeting Minutes
Motion by Councilmember Hatfield, second by Councilmember Hubbard to approve the minutes of the February 27, 2023 City Council meeting.
Motion carried.

9. Consent Agenda
Motion by Councilmember Grau, second by Councilmember Hubbard to approve Consent Agenda Item A:

A. Adopt Resolution No. 2023-21 Authorizing Agreement for TH41 Improvements (Hwy 5 to Pioneer Trail)

Motion to adopt Resolution No. 2023-21 to Waive Municipal Consent and to enter into MnDOT Cooperative Construction Agreement No. 1051703 for the State Project No. 1008-96 for improvements along Trunk Highway 41.
Motion Carried.

10. Action Items
10.A. Motion to Authorize Negotiation of Contracts for Architectural and Engineering Services and Construction Management Services for the Public Safety Facility
City Administrator Podhradsky introduced the item to the Council and CNH Architects Quinn Hutson and Brooke Jacobson provided a presentation on it.

Councilmember Grau stated CNH has completed some nice-looking buildings.

Mayor Windschitl asked what the cost per square foot would be. Mr. Hutson stated a brand new fire station would be about $400 per square foot. However, Chaska was looking a more of a remodel, which would be closer to $350 per square foot.

Councilmember Huang asked who is coordinating the efforts to ensure operations can continue throughout the remodel. Ms. Jacobson stated coordination will take place during the design process to create phases and ensure continued operations can continue.

Councilmember Hatfield stated CNH has shown intentional impactful design in the past, and the Council looks forward to seeing what they will do in Chaska.

Motion by Councilmember Huang, second by Councilmember Grau to authorize Staff to negotiate a contract with CNH for architectural and engineering services for a new Public Safety Facility.
Motion carried.

A gentleman that just moved back to Chaska stated he wanted to listen in and participate in local government. Mayor Windschitl thanked him for coming and apologized for needing to begin a closed session.

11. Closed Session
11.A. Council will meet in closed session pursuant to Minn Stat. 13D.05, subd. 3(b) for attorney client privileged communication with the City Attorney regarding arbitration proceedings with Mueller Systems, LLC.

Motion by Councilmember Grau, second by Councilmember Hatfield to enter into a closed session at 8:06 p.m.
Motion carried.

12. Open Session

13. Bills
13.A. Accounts Payable Claims Roster 6-3-2023
The Council requested further information about bills on pages 7 and 11.

City Administrator Podhradsky provided further information regarding those bills.

Motion by Councilmember Huang, second by Councilmember Hatfield to approve the bills as presented. Roll call was taken. Voting aye: Councilmembers Hatfield, Hubbard, Huang, Grau and Mayor Windschitl. Voting nay: None
Motion carried.

14. Other Business
14.A. City Administrator's Report

14.A.i. Bi-Weekly Report 6-3-2023

Councilmember Hubbard:

- Noted there is an upcoming open house for Hwy 41 on Thursday, March 9 5:00-7:00 p.m. at the Event Center Chaska Community Center, a County-hosted public meeting on Thursday, March 23 4:00-7:00 p.m., and another for a resurfacing project on Wednesday, March 8 4:30-6:30 p.m. at Chaska Middle School East.
- Welcomed Officer Rodriguez as he was recently sworn in.

Councilmember Huang:

- Welcomed Officer Rodriguez as he was recently sworn in.
- Asked for an update on the Costco project. City Administrator Podhradsky stated the roundabout is the next step and it will be completed before summer. The ultimate opening is Spring 2024.
- Noted nominations are open to highlight impactful women. The link is on Facebook and on the Human Rights Commissions' webpage.
- Pointed out the Alice in Wonderland was the runner up in the section 2A championships, a Knowledge Bowl Purple team qualified for finals in April, and the orchestra received a superior rating at the regional competition. Two students have signed on to continue their athletic careers in college and two students have received triple As for grades. The dance team has earned the west Metro conference championship for the eleventh time in the last 12 years. The have qualified for and competed at the State level for high kick and jazz funk. A junior will compete at the State tournament for alpine skiing, and the girls' basketball team is in the conference championship for the fourth year in a row. A student has qualified to compete at the State championship for wrestling and another for swimming/diving.
- Noted there are concerns about an upcoming bill that restricts a City's ability to change zoning. He asked how that could impact Chaska. Assistant City Administrator Elise Durbin stated there is a concern about the time limit to collect and spend impact fees from developers. The fees may be passed along to homeowners while the developer could be reimbursed. City Administrator Podhradsky suggested the Staff could write a letter expressing concerns if directed by the Council.

Councilmember Grau:

- Stated he got a notice on his door there might be a water leak. He explained it is a perk of living in the City of Chaska.
- Added Chaska Basketball association League is wrapping up. He noted his son's team received runner up at the State tournament as a C team.

Assistant City Administrator Durbin:

- Pointed out there is an open house regarding the PB roundabout at 41 on Wednesday morning for businesses. The businesses have been notified through postcard, door-knocking, emails, and phone calls.

City Administrator Podhradsky:

- Noted Tuesday morning there would be a years of service recognition breakfast for Staff.

Mayor Windschitl:

- Congratulated the basketball team for their successful season. Councilmember Grau noted there are Section Finals that upcoming weekend against Eden Prairie.
- Thanked Public Works for their hard work maintaining the roads.
- Noted the next meeting is March 20, 2023 and the Department retreat is next week on Tuesday and Wednesday.

15. Adjourn

Motion by Councilmember Hatfield, second by Councilmember Hubbard to adjourn the meeting at 9:15 p.m.
Motion carried.

- MINUTES -
CHASKA CITY COUNCIL
MARCH 20, 2023

1. Call to Order
The meeting was called to order by Mayor Windschitl at 7 p.m.

2.Pledge of Allegiance

3. Roll Call
Roll call was taken. Present: Mayor Windschitl and Councilmembers Grau, Hatfield, Hubbard, and Huang.

Absent: None.

Also Present: Matt Podhradsky, City Administrator; Kevin Wright, Communication Director; Elise Durbin, Assistant Administrator; Jake Saufley, City Attorney.

4. Adopt the Agenda
Motion by Councilmember Hubbard, second by Councilmember Hatfield to adopt the agenda as eld. Motion carried.

5. Visitor Presentation
5.A. Highway 41 Update
Assistant Administrator Elise Durbin provided an update on outreach regarding Highway 41.

Councilmember Huang pointed out there are a lot of construction projects going on in the City this summer. He clarified that there are various community meetings for the projects, but each meeting is regarding a different project area.

Ms. Durbin stated staff has considered the issue of confusion regarding carious projects, and they are working on creating a website with more specifics on each project.

Mayor Windschitl added he just finished an interview with the *Neighbors of Chaska* magazine where he mentioned the various construction projects going on. He will submit a similar set of comments to the *Herald* as well.

Councilmember Grau asked if there is a plan to prepare other roads for the extra traffic due to construction detours. City Administrator Podhradsky stated the construction will only make Pine Street worse and will likely be part of the next round of street reconstruction.

City Administrator Podhradsky noted Assistant Administrator Elise Durbin has done an outstanding job with community engagement. Councilmember Hubbard noted her agreement with City Administrator Podhradsky.

Councilmember Hubbard added construction projects have a serious impact on small businesses and thanked the business community for sticking it out. City Administrator Podhradsky stated Staff will continue to encourage community members to visit the small businesses as there will always be access options.

Councilmember Huang agreed Assistant Administrator Elise Durbin has been working really hard to communicate and engage with community members and businesses. Mayor Windschitl noted his agreement.

6. Approve Previous Meeting Minutes
6.A. Approve the March 6, 2023 City Council Meeting Minutes
Motion by Councilmember Grau, second by Councilmember Hubbard to approve the minutes of the March 6, 2023 City Council meeting.
Motion carried.

7. Consent Agenda
Councilmember Grau asked where the funds from the police auction end up. City Administrator Podhradsky explained the funds support police programming.

Mayor Windschitl pointed out the Council did a review of City Administrator Podhradsky's performance during a closed session. The Council is very happy with the City Administrator's work, and the review went very well. Councilmember Grau added the Council is very happy to have City Administrator Podhradsky on board.

City Administrator Podhradsky thanked the Council for the opportunity to work for such a great City.

Motion by Councilmember Huang, second by Councilmember Hubbard to approve the Consent Agenda Items A through I:

A. Adopt Ordinance 1032 to Amend Chapter 10, Article 10.20, Sections 10, 30, 40, 50 and 120 of the Chaska Code of Ordinances

Motion to adopt Ordinance 2023-1032 amending Chapter 10, Article 20, Section 10, 30, 40, 50 and, 120 of the Chaska Municipal Code of Ordinances changing permits from an annual one (1) year permit to a three (3) year permit for $90.

B. Police Auction

Motion to approve the auction/sale of items by the Chaska Police Department.

C. City Administrator Annual Review

Motion to approve administrator goals for 2023 and adjust the City Administrator's annual salary with a 4.195% performance increase retroactive to January 1, 2023.

D. Municipal Tort Liability Limits

Motion to direct the City Administrator to inform the League of Minnesota Cities Insurance Trust that the City of Chaska elects not to waive the monetary limits on municipal tort liability established by Minnesota Statute.

E. Adopt Resolution No. 2023-23 Authorization of MCES I & I Grant Participation

Motion to adopt Resolution No. 2023-23 adopting the participation in the 2021 - 2022 MCES I & I Grant Program.

F. Appointment of the Human Rights Commission Chair and Vice Chair
Motion to appoint Sarah Carlson to serve as Chairperson of the Human Rights Commission and appoint Martin Hubbard to serve as Vice-Chairperson of the Human Rights Commission for the calendar year 2023.

G. First Amendment to Water Tower Antennae Agreement
City Council approved the First Amendment to the Water Tower Antennae Agreement with Sprint Spectrum Realty Company LLC and authorize the Mayor and City Administrator to execute the Amendment.

H. Adopt Resolution 2023-24 Supporting a Grant Application to the Minnesota Department of Natural Resources
Adopt Resolution 2023-24 supporting a grant application to the Minnesota Department of Natural Resource's Outdoor Recreation Grant Program.

I. Audit Engagement Letter for 2022 Audit and Federal Single Audit
Motion to approve the 2022 Audit Engagement Letter with MMKR dated March 3, 2023, and authorize the Mayor and City Administrator to sign the Audit Engagement Letter.
Motion carried.

8. Action Items

9. Bills
9.A. Accounts Payable Claims Roster 20-3-2023
The Council requested further information about bills on pages 4, 7, and 23.

City Administrator Podhradsky provided further information regarding those bills.

Motion by Councilmember Huang, second by Councilmember Grau to approve the bills as presented. Roll call was taken. Voting aye: Councilmembers Hatfield, Hubbard, Huang, Grau and Mayor Windschitl. Voting nay: None
Motion carried.

10. Other Business
10.A. City Administrator's Report

10.A.i. Bi-Weekly Report 6-3-2023
Mayor Windschitl asked for a summary on land trusts. City Administrator Podhradsky explained land trusts in Chaska were originally set up as an affordable housing fund. The land trust creates a nonprofit that owns the land while another person or entity owns the building on the land. There are still taxes owed by the building owner. The City puts tax dollars into the purchase and makes sure the agreement benefits the City in the long-run.

Councilmember Grau:
- Noted his appreciation for the article in the *Herald* regarding grocery stores and the need for grocery stores in certain areas.

Councilmember Huang:

- Stated March 23, 2023 4:00-7:00 p.m. at the Community Center, there is a meeting with a project update for the Highway 41 project.
- Asked if the City is still taking applications for homes that need work. City Administrator Podhradsky stated the applications are closed. Staff has several applications to review.
- Asked if the Council needs to consider adding any streets to upcoming reconstruction projects due to the harsh winter. City Administrator Podhradsky stated Staff will be busier, but there shouldn't be a budgetary impact.

Councilmember Hubbard:

- Noted the upcoming open house mentioned by Councilmember Huang includes presentations at 4:30 p.m. and 6:00 p.m.
- Pointed out there is an upcoming Coffee with a Cop, and there is more information from a Chaska postcard that detailed several upcoming community events. The postcard was very informative.

Councilmember Hatfield:

- Stated Coffee with a Cop will be Thursday, March 23 at Red Bench at 9:00 a.m.
- Explained the City Council had a recent retreat over two full days regarding strategies for the City and building community.

Assistant Administrator Elise Durbin:

- Pointed out the Human Rights Commission is still taking nominations for outstanding women in the community in honor of Women's History Month. It will be a social media campaign.

City Administrator Podhradsky:

- Thanked the Council for the time and energy spent on the retreat. He noted Staff is considering making a presentation reflecting the discussions from the retreat.
- Added he will not be present at the next Council meeting.

Mayor Windschitl:

- Pointed out City Square Park will be under construction in 2023. City Administrator Podhradsky noted there are challenges with the historic nature of the park, but Staff will provide a presentation to Council with more details. There are also restrictions with designations around the burial mounds. Staff sets up temporary roping during special events to protect the mounds from visitors and large crowds.
- Stated the upcoming City Council meetings are back on the regular scheduled.
- Wished everyone a happy first day of Spring.
- Asked if Cardinal Street is on an upcoming street reconstruction. City Administrator Podhradsky stated that might have been part of the development agreement in the area.
- Congratulated Chaska Girls' Basketball on a wonderful season.

<u>10.B. Approved HRC Meeting Minutes 26-1-2023</u>

<u>11. Adjourn</u>

Motion by Councilmember Hatfield, second by Councilmember Grau to adjourn the meeting at 8:25 p.m.
Motion carried.